US008842253B2

(12) **United States Patent**
Kim et al.

(10) **Patent No.: US 8,842,253 B2**
(45) **Date of Patent: *Sep. 23, 2014**

(54) **LIQUID CRYSTAL DISPLAY DEVICE HAVING AIR CONDITIONER**

(71) Applicant: **SAMSUNG Electronics Co., Ltd.**, Suwon-si (KR)

(72) Inventors: **Jin Sub Kim**, Seongnam-si (KR); **Jin Hyun Cho**, Seoul (KR); **Sung Ki Kim**, Seoul (KR); **Joon Kang**, Seoul (KR)

(73) Assignee: **SAMSUNG Electronics Co., Ltd.**, Suwon-si (KR)

(*) Notice: Subject to any disclaimer, the term of this patent is extended or adjusted under 35 U.S.C. 154(b) by 0 days.

This patent is subject to a terminal disclaimer.

(21) Appl. No.: **13/780,137**

(22) Filed: **Feb. 28, 2013**

(65) **Prior Publication Data**

US 2013/0176517 A1 Jul. 11, 2013

Related U.S. Application Data

(63) Continuation of application No. 13/530,312, filed on Jun. 22, 2012, now Pat. No. 8,411,227, which is a continuation of application No. 12/478,832, filed on Jun. 5, 2009, now Pat. No. 8,223,311.

(30) **Foreign Application Priority Data**

Jun. 13, 2008 (KR) 10-2008-0055687

(51) **Int. Cl.**
G02F 1/1333 (2006.01)
G02F 1/133 (2006.01)

(52) **U.S. Cl.**
USPC **349/161**; 349/58; 349/72

(58) **Field of Classification Search**
USPC 349/161, 72, 58
See application file for complete search history.

(56) **References Cited**

U.S. PATENT DOCUMENTS

5,682,216	A	10/1997	Lin et al.	
5,991,153	A	11/1999	Heady	
8,223,311	B2 *	7/2012	Kim et al.	349/161
8,274,622	B2 *	9/2012	Dunn	349/58
8,310,824	B2	11/2012	Dunn et al.	
8,351,013	B2	1/2013	Dunn et al.	
8,351,014	B2	1/2013	Dunn	
8,358,397	B2	1/2013	Dunn	

(Continued)

FOREIGN PATENT DOCUMENTS

CN	2804906	8/2006
EP	1 253 459	10/2002

(Continued)

OTHER PUBLICATIONS

Extended European Search Report issued in European Patent Application No. 09162240.7 on Jul. 22, 2011.

(Continued)

Primary Examiner — Mike Qi
(74) *Attorney, Agent, or Firm* — Stanzione & Kim, LLP

(57) **ABSTRACT**

A liquid crystal display device includes a liquid crystal panel, a protection panel arranged a predetermined distant from the liquid crystal panel, and a flow control device to impart turbulence to an air flow in a channel, which is defined between the liquid crystal panel and the protection panel.

20 Claims, 10 Drawing Sheets

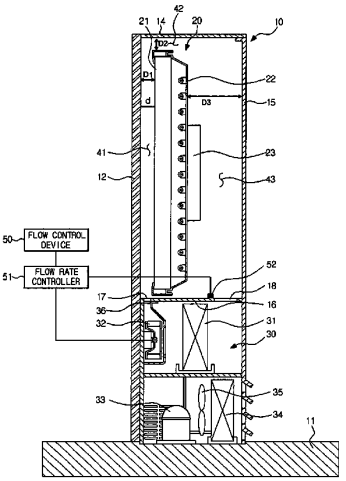

(56) **References Cited**

U.S. PATENT DOCUMENTS

8,369,083	B2	2/2013	Dunn et al.	
8,373,841	B2	2/2013	Dunn	
8,379,182	B2	2/2013	Dunn	
8,411,227	B2 *	4/2013	Kim et al.	349/58
8,418,387	B2	4/2013	Swatt et al.	
8,482,695	B2	7/2013	Dunn	
8,497,972	B2	7/2013	Dunn et al.	
8,649,170	B2	2/2014	Dunn et al.	
8,654,302	B2	2/2014	Dunn et al.	
8,693,185	B2	4/2014	Dunn et al.	
2006/0082271	A1 *	4/2006	Lee et al.	313/35
2007/0058339	A1	3/2007	Hoffman et al.	
2009/0126906	A1	5/2009	Dunn	
2009/0126907	A1	5/2009	Dunn	
2009/0126914	A1	5/2009	Dunn	
2009/0135365	A1	5/2009	Dunn	
2009/0213304	A1	8/2009	Dunn et al.	
2009/0243501	A1	10/2009	Dunn et al.	
2009/0244472	A1	10/2009	Dunn	
2011/0261523	A1	10/2011	Dunn et al.	
2011/0280005	A1	11/2011	Dunn	
2012/0105790	A1	5/2012	Hubbard	
2012/0106081	A1	5/2012	Hubbard et al.	
2012/0206687	A1	8/2012	Dunn et al.	
2013/0170140	A1	7/2013	Dunn	
2013/0270975	A1	10/2013	Dunn et al.	
2013/0279154	A1	10/2013	Dunn	

FOREIGN PATENT DOCUMENTS

EP	1253459	10/2002
JP	2007-183436	7/2007
WO	03/075081	9/2003
WO	2005/079129	8/2005

OTHER PUBLICATIONS

Chinese Office Action issued on Jun. 6, 2012 in CN Patent Application No. 200910147957.8.

BoldVu Digital Displays, Educational Article, Nov. 2011; Cooling for Digital Display—Why it matters., Manufacturing Resources International, Inc.

* cited by examiner

FIG. 1

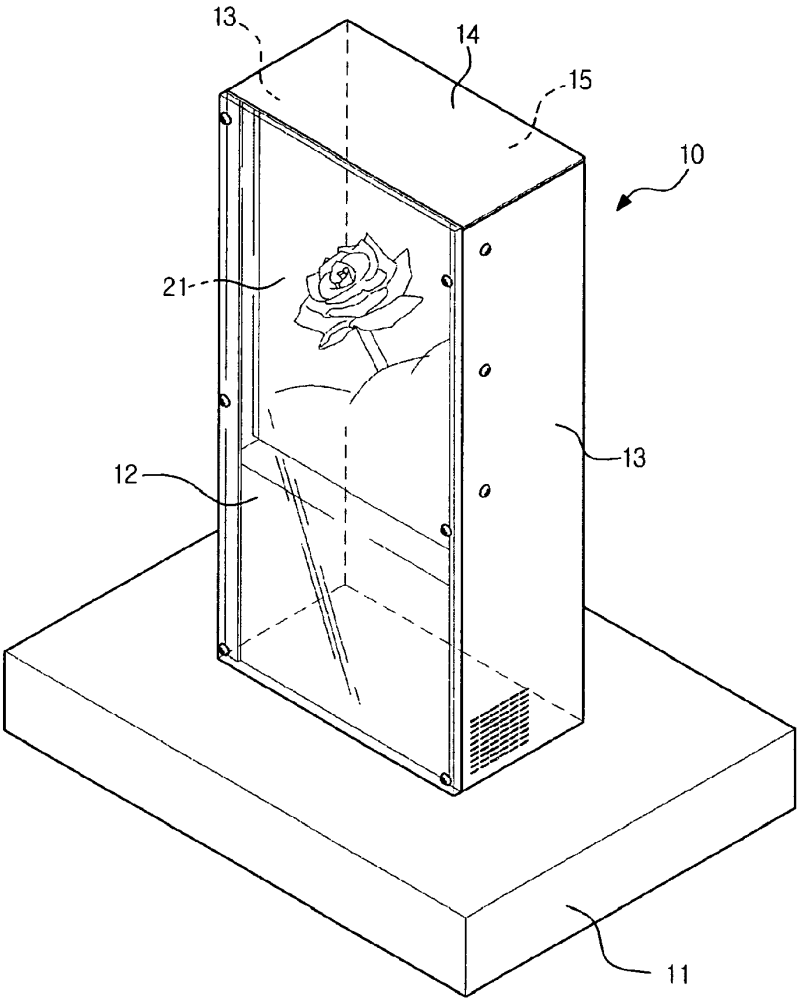

FIG. 2

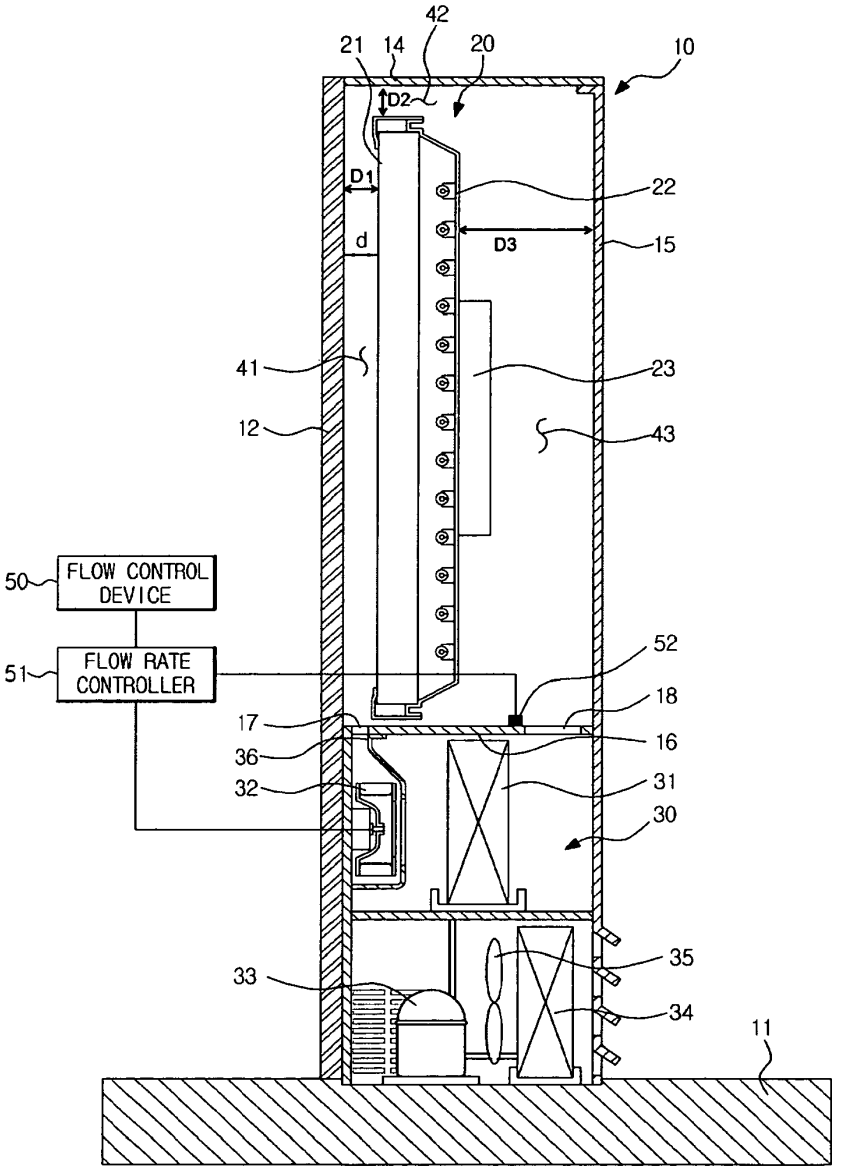
42
21
14
20
10
D2
D1
22
d
D3
15
41
23
12
43
50
FLOW CONTROL DEVICE
51
FLOW RATE CONTROLLER
52
18
17
16
36
32
31
30
35
33
34
11

FIG. 3

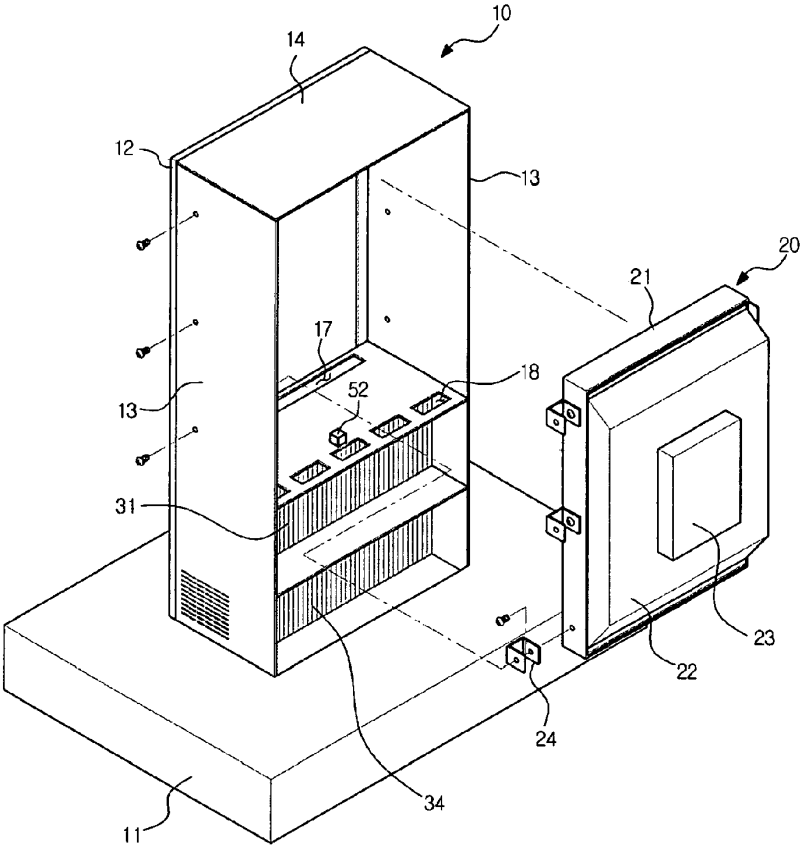

FIG. 4

d = 0.004 m

SOLAR RADIATION [W/m²]	FLOW VELOCITY IN CHANNEL [m/s]					
	5	8	10	12	14	16
600	84.5	70.6	65.8	62.6	60.3	58.5
850	101	81.2	74.5	69.9	66.6	64.1
1100	117.5	91.9	83.1	77.2	73	69.7

FIG. 5

d = 0.005 m

SOLAR RADIATION [W/m²]	FLOW VELOCITY IN CHANNEL [m/s]					
	4	6	8	10	12	14
600	88	74.7	67.8	63.6	60.8	58.7
850	105.9	87	77.3	71.4	67.3	64.4
1100	123.9	99.4	86.8	79.1	73.9	70

FIG. 6

d = 0.025 m

SOLAR RADIATION [W/m²]	FLOW VELOCITY IN CHANNEL [m/s]				
	3	4	6	8	10
600	82	74.1	65.7	61.3	58.6
850	97.4	86.2	74.4	68.1	64.2
1100	112.8	98.3	83	74.9	69.9

FIG. 7

d = 0.03 m

SOLAR RADIATION [W/m²]	FLOW VELOCITY IN CHANNEL [m/s]				
	3	4	6	8	10
600	82	74.1	65.8	61.4	58.7
850	97.4	86.3	74.5	68.3	64.3
1100	112.8	98.4	83.2	75.1	70

FIG. 8

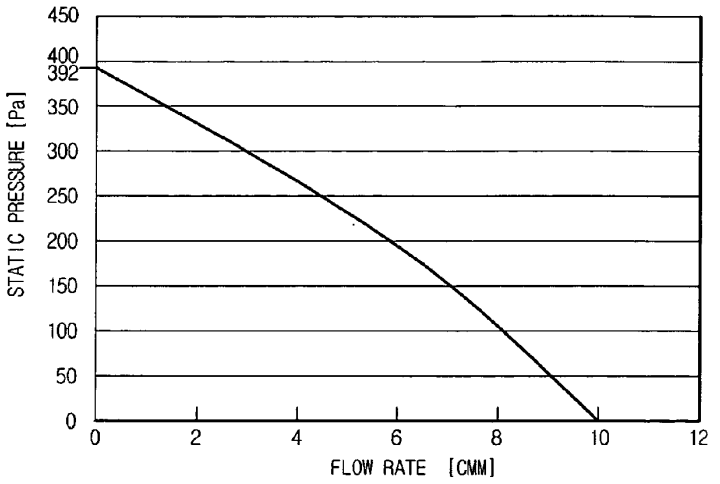
450
400
392
350
300
250
200
150
100
50
0
STATIC PRESSURE [Pa]
0
2
4
6
8
10
12
FLOW RATE [CMM]

FIG. 9

FLOW VELOCITY, V [m/s]	SPACING DISTANCE, d [m]				
	0.005	0.01	0.015	0.02	0.025
1	629	1259	1888	2517	3147
2	1259	2517	3776	5035	6293
3	1888	3776	5664	7552	9440
4	2517	5035	7552	10069	12587
5	3147	6293	9440	12587	15733
6	3776	7552	11328	15104	18880

FIG. 10

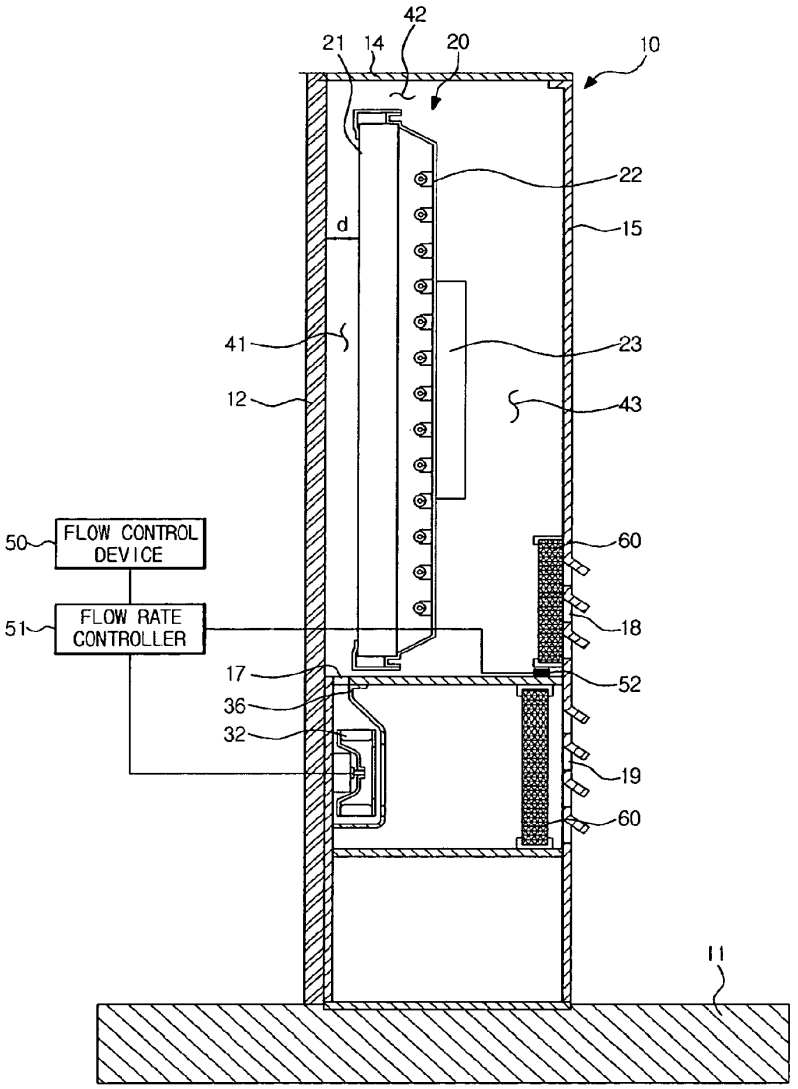
42
21
14
20
10
22
d
15
41
23
12
43
50
FLOW CONTROL DEVICE
60
51
FLOW RATE CONTROLLER
18
17
52
36
32
19
60
11

LIQUID CRYSTAL DISPLAY DEVICE HAVING AIR CONDITIONER

CROSS-REFERENCE TO RELATED APPLICATIONS

This application is a Continuation of U.S. patent application Ser. No. 13/530,312, filed on Jun. 22, 2012 which is a Continuation of prior application Ser. No. 12/478,832, filed on Jun. 5, 2009 now U.S. Pat. No. 8,223,311 in the United States Patent and Trademark Office, which claims priority under 35 U.S.C. §119(a) from Korean Patent Application No. 2008-0055687, filed on Jun. 13, 2008 in the Korean Intellectual Property Office, the disclosure of which is incorporated herein in its entirety by reference.

BACKGROUND OF THE INVENTION

1. Field of the Invention

The present general inventive concept relates to a liquid crystal display device, and, more particularly, to a liquid crystal display device with a heat dissipation structure to cool a liquid panel of the device.

2. Description of the Related Art

Liquid crystal display (LCD) devices are widely used in display applications such as displays of meters for automobiles and/or construction equipment, laptop computers, mobile phones, TVs, etc.

An LCD device generally includes a liquid crystal panel and a backlight unit (BLU) to apply light to a rear side of the liquid crystal panel. The liquid crystal panel consists of a pair of substrates which face each other with a liquid crystal layer interposed therebetween. The backlight unit includes a light source to emit the light to the liquid crystal panel. Such light source may include a cold cathode fluorescent tube, a light emitting diode (LED), and the like.

The light source in the backlight unit not only emits light but also generates heat to cause degradation of liquid crystals. Therefore, the LCD device must include a heat dissipation element to discharge or release the heat generated by the light source. The heat dissipation element is typically located at a rear side relative to the liquid crystal panel, such that this releases the heat generated from the BLU mounted on the rear side of the liquid crystal panel.

Thus, when the LCD device is used outdoors, a front side of the liquid crystal panel is exposed to sunlight, leading to an increase in temperature and degradation of the panel. Accordingly, the LCD device must only be used in a limited place, such as a room. That is, conventional LCD devices are not applicable to outdoor billboards to which sunlight energy is incident for long periods of time.

In order to solve the problems described above due to limitations and disadvantages of the related art, the present general inventive concept is directed an LCD device with a heat dissipation structure to remove or release heat incident on a front side of a liquid crystal panel.

SUMMARY OF THE INVENTION

Additional aspects and utilities of the present general inventive concept will be set forth in part in the description which follows and, in part, will be obvious from the description, or may be learned by practice of the general inventive concept.

The foregoing and/or other aspects and utilities of the general inventive concept may be achieved by providing a liquid crystal display (LCD) device including a liquid crystal panel, a protection panel arranged a predetermined distance from the liquid crystal panel, and a flow control device to impart turbulence to an air flow in a channel, which is defined between the liquid crystal panel and the protection panel.

The flow control device may be a cooling fan to blow air to the channel.

The flow control device may also include a temperature sensor to detect a temperature of air having passed through the channel, and a flow rate controller to regulate a flow rate of the air blown from the cooling fan.

The flow control device may regulate a flow rate of air in the cooling fan, which in turn, controls a flow velocity of air in the channel in a range of 4 m/s to 14 m/s.

The channel may be defined between the liquid crystal panel and the protection panel and has a spacing distance in a range of 5 to 25 mm.

The channel may be an air inlet to receive air and an air outlet to discharge the received air from the channel. The cooling fan may be located near the air inlet.

Each of the air inlet and the air outlet may be provided with a dust filter to remove foreign matter from the air.

The LCD device may include a backlight unit and a circuit board, both provided at the rear side of the liquid crystal panel, and a rear panel spaced apart from the backlight unit and the circuit board. The air passing through the channel, which is defined between the protection panel and the liquid crystal panel, may flow via another channel formed by the backlight unit and the circuit board so as to remove heat generated from the backlight unit and the circuit board.

The foregoing and/or other aspects and utilities of the general inventive concept may also be achieved by providing a liquid crystal display (LCD) including a liquid crystal panel, a protection panel arranged a predetermined distance from the liquid crystal panel, and a flow control device to detect a variation in temperature caused by heat incident on the front side of the liquid crystal panel, and to control a flow rate of the air blowing toward a channel, which is defined between the liquid crystal panel and the protection panel.

The flow control device may have a flow rate controller to regulate the flow rate of the air such that air in the channel has a flow velocity of not less than 4 m/s when the channel defined between the liquid crystal panel and the protection panel has a spacing distance in the range of 5 to 25 mm.

The flow control device may also have a temperature sensor to detect a temperature variation of the air having passed through the channel. The flow rate controller is operated by a signal transmitted from the temperature sensor.

The foregoing and/or other aspects and utilities of the general inventive concept may also be achieved by providing a liquid crystal display (LCD) device including a housing partitioned into upper and lower spaces, a liquid crystal panel assembly arranged in the upper space, and an air conditioner arranged in the lower space to blow air to the liquid crystal assembly to cool the liquid crystal assembly.

The LCD device may also include a flow control device to impart turbulence to air blowing toward the liquid crystal panel assembly and, thus, to cool the liquid crystal panel assembly.

The housing may include a protection panel formed at the front side thereof, and the air conditioner has a cooling fan to blow the air to a channel formed by the protection panel and the liquid crystal panel assembly.

The flow control device may also have a flow rate controller to regulate a flow rate of the air blown from the cooling fan such that the air in the channel has a controlled flow velocity.

The channel may be formed in a space between the liquid crystal panel assembly and the protection panel by a spacing

distance in the range of 0.005 to 0.025 m (that is, 5 to 25 mm). The flow rate controller regulates the flow rate of the air in the cooling fan such that the flow velocity of air in the channel may be maintained at 4 m/s or more.

The flow control device may also include a temperature sensor to measure a temperature of the air having passed through the channel, and to send a resulting signal to the flow rate controller.

The flow rate controller may control the cooling fan such that the flow velocity of the air in the channel may be maintained at 14 m/s or less.

The liquid crystal panel assembly includes a liquid crystal panel, a backlight unit to irradiate light to the liquid crystal panel, and a circuit board to control the liquid crystal panel and the backlight unit.

The foregoing and/or other aspects and utilities of the general inventive concept may also be achieved by providing a display device including a liquid crystal panel to display an image, a protection panel to protect the liquid crystal panel, and a channel formed between the liquid crystal panel and the protection panel to pass air therebetween to remove heat from a front side of the liquid crystal panel, wherein a distance between the liquid crystal panel and the protection panel is in a range of 5 mm to 25 mm.

The foregoing and/or other aspects and utilities of the general inventive concept may also be achieved by providing a display device including a liquid crystal panel to display an image, a protection panel to protect the liquid crystal panel, a channel formed between the liquid crystal panel and the protection panel, and a flow control device to provide turbulent air in the channel to remove heat from a front side of the liquid crystal panel.

The flow control device may include a cooling fan to blow the air to the first channel, a flow rate controller to regulate a flow rate of air in the cooling fan to control a flow velocity of the air in the channel, and a temperature sensor to measure temperature of the air having passed through the first channel, and to send a resulting signal to the flow rate controller.

A distance between the liquid crystal panel and the protection panel may be determined by a static pressure-flow rate curve of the cooling fan.

The foregoing and/or other aspects and utilities of the general inventive concept may also be achieved by providing a display device including a housing a display assembly disposed inside the housing and spaced apart from the housing to form front, top, and rear air flow channels in order.

The display device may further include a flow control device to generate an air flow to flow air through the front, top and rear air channels in order.

The flow control device may include an air conditioner to generate a cooling air as the air flows.

Each of the LCD devices with the constructions described above according to the present general inventive concept has an advantage of not being degraded even when used outdoors and, therefore, is effectively applicable regardless of location.

Furthermore, the cooling fan in the LCD device of the present general inventive concept can be controlled depending on the outdoor environments, thereby possibly reducing electric power consumption.

BRIEF DESCRIPTION OF THE DRAWINGS

These and/or other aspects and utilities of the present general inventive concept will become apparent and more readily appreciated from the following description of the embodiments, taken in conjunction with the accompanying drawings of which:

FIG. **1** is a perspective view illustrating a liquid crystal display device according to an embodiment of the present general inventive concept;

FIG. **2** is a side cross-sectional view illustrating the liquid crystal display device of FIG. **1**;

FIG. **3** is a rear side view illustrating the liquid crystal display device of FIG. **1**;

FIG. **4** illustrates a table for maximum temperatures of a liquid crystal with respect to solar radiation at an outdoor temperature of 45° C. and flow velocity of air in a first channel, when the first channel is formed at a spacing distance of 0.004 m;

FIG. **5** illustrates a table for maximum temperatures of a liquid crystal with respect to solar radiation at an outdoor temperature of 45° C. and flow velocity of air in a first channel, when the first channel is formed at a spacing distance of 0.005 m;

FIG. **6** illustrates a table for maximum temperatures of a liquid crystal with respect to solar radiation at an outdoor temperature of 45° C. and flow velocity of air in a first channel, when the first channel is formed at a spacing distance of 0.025 m;

FIG. **7** illustrates a table for maximum temperatures of a liquid crystal with respect to solar radiation at an outdoor temperature of 45° C. and flow velocity of air in a first channel, when the first channel is formed at a spacing distance of 0.03 m;

FIG. **8** is a graph illustrating a static pressure-flow rate curve of a typical cooling fan;

FIG. **9** illustrates a table for Reynolds numbers with respect to different flow velocities of air in a first channel depending on a spacing distance of the same; and

FIG. **10** is a cross sectional view illustrating a liquid crystal display device according to another embodiment of the present general inventive concept.

DETAILED DESCRIPTION OF THE PREFERRED EMBODIMENTS

Reference will now be made in detail to embodiments of the present general inventive concept, examples of which are illustrated in the accompanying drawings, wherein like reference numerals refer to the like elements throughout. The embodiments are described below to explain the present general inventive concept by referring to the figures.

A description will be given of an exemplary embodiment of the present general inventive concept with reference to FIGS. **1** to **3**.

FIG. **1** is a perspective view illustrating a liquid crystal display device according to the exemplary embodiment of the present general inventive concept. A display device, such as a flat display panel or a PDP apparatus, can be used as the liquid crystal display device.

As illustrated in FIG. **1**, the liquid crystal display device includes a housing **10** and a bottom plate **11** arranged beneath the housing **10** to support the same. The housing **10** includes two opposite side panels **13**, a top panel **14** to join the side panels **13**, a protection panel **12** provided at a front side of the housing **10**, and a rear panel **15** provided at a rear side of the housing **10**. The housing **10** is equipped with an LCD assembly **20** having a liquid crystal panel **21** therein. The protection panel **12** may be prepared using a transparent material such as glass such that an image displayed by the liquid crystal panel **21** (as illustrated in FIG. **2**) can be viewed outside the housing **10**.

FIG. **2** is a side cross-sectional view and FIG. **3** is a rear perspective view illustrating the liquid crystal display device illustrated in FIG. **1**.

As illustrated in FIGS. **2** and **3**, the housing **10** is partitioned into upper and lower spaces by a partition **16** built in the housing. There is a liquid crystal panel assembly **20** in the upper space while an air conditioner **30** is arranged in the lower space. A display panel assembly, such as a flat display assembly or a PDP assembly, can be used as the LCD assembly **20**. The liquid crystal panel **21** which displays an image is included in the liquid crystal panel assembly **20**. The liquid crystal panel assembly **20** also includes a backlight unit **22** located at a rear side of the liquid crystal panel **21** to irradiate light thereto, and a circuit board **23** located at a rear side of the backlight unit **22** to control operation of the liquid crystal panel **21** and the backlight light **22**. The air conditioner **30** includes an evaporator **31** and a cooling fan at an upper portion thereof, as well as a compressor **33**, a condenser **34** and an air blowing fan **35** at a lower portion thereof.

The liquid crystal panel assembly **20** is disposed such that the liquid crystal panel assembly **20** is spaced apart from the protection panel **12** at the front side of the housing **10**. The liquid crystal panel assembly **20** is also spaced apart from the rear panel **15** at the rear side of the housing **10**. The liquid crystal panel assembly **20** is also spaced from the top panel **14** of the housing **10**. Accordingly, air in the housing **10** can pass through a first channel **41** defined between the liquid crystal panel assembly **20** and the protection panel **12**, a second channel **42** defined between the liquid crystal panel assembly **20** and the top panel **14** of the housing **10**, and a third channel **43** defined between the liquid crystal panel **20** and the rear panel **15**. The first channel **41** has a first distance D**1**, the second channel **42** has a second distance D**2**, and the third channel **43** has a third distance D**3**. The third distance D**3** may be different from the first distance D**1** and the second distance D**2**.

The partition **16** has an air outlet **18** at a rear portion thereof such that the upper space and lower spaces of the housing **10** can communicate with each other. Therefore, the air in the third channel **43** can move toward the evaporator **31**. The partition **16** also has an air inlet **17** at a front portion thereof such that the upper and lower spaces of the housing **10** communicate with each other. As a result, air blown from the cooling fan **32** can move to the first channel **41**.

The cooling fan **32** has an exit **36** arranged at the air inlet **17** where air emerging from the exit **36** passes through the first channel **41**. Therefore, the air blown toward the first channel **41** by the cooling fan **32** is maintained at a relatively low temperature because it has already passed through the evaporator **31**. Accordingly, the air blown toward the first channel **41** by the cooling fan **32** removes heat incident on the front side of the liquid crystal panel **21** and cools the liquid crystal panel **21** while passing through the first channel **41**. The heat incident on the front side of the liquid crystal panel **21** may include solar radiation, heat transfer caused by a variation in ambient temperature, and the like. After passing through the first channel **41**, the air passes through the second and third channels **42** and **43** in this order. In particular, the air passing through the third channel **43** removes heat generated from the backlight unit **22** and the circuit board **23**. After emerging from the third channel **43**, the air is cooled again while passing through the evaporator **31**.

An air flow process in the housing **10** will be described in detail below: the cooled air having passed through the evaporator **31** passes through the air inlet **17** by the cooling fan **32**. Next, the air sequentially passes through the first, second and third channels **41**, **42** and **43**. Herein, the air removes the heat incident on the front side of the liquid crystal panel **21** while passing through the first channel **41** as well as the heat generated from the backlight unit **22** and the circuit board **23** during passage through the third channel **43**. Following this, the air returns to the evaporator **31** through the air outlet **18**.

As is apparent from the description disclosed above, in the liquid crystal display device of the present general inventive concept, the liquid crystal panel assembly **20** is disposed in the upper space and the air conditioner **30** is disposed in the lower space of the housing **10**, so that the air conditioner **30** can cool the liquid crystal panel assembly **20**. However, when the liquid crystal display device is located outside and is continuously exposed to solar radiation and, when the external temperature increases in the summer, the front side of the liquid crystal panel **21** is heated and leads to a rapid increase in temperature of liquid crystals in the panel, which in turn, results in degradation of liquid crystals. Therefore, a method may be devised that improves performance of the air conditioner **30** to decrease the temperature of air blowing toward the first channel **41** to prevent degradation of liquid crystals. However, in order to improve the performance of the air conditioner **30**, the air conditioner **30** must be enlarged, which may result in increased manufacturing costs. Consequently, in consideration of various requirements and manufacturing costs that inhibit the liquid crystal display device from being infinitely enlarged, another approach to prevent degradation of liquid crystals is still required.

The LCD device of the present general inventive concept is configured such that the air passing through the first channel **41** can sufficiently absorb the heat incident on the front side of the liquid crystal panel **21**, taking into consideration the fact that the degradation of liquid crystals occurs due to the heat incident on the front side of the liquid crystal panel **21**. Thus, if the air passing through the first channel **41** is turbulent, the turbulent air flow can considerably remove the heat incident on the front side of the liquid crystal panel **21**, compared to a laminar flow. One reason for this is presumed to be because the turbulent air flow has greater inertia than the laminar flow to induce a variation of velocity over time, therefore, this abnormal flow accelerates mixing in a boundary layer, resulting in improved momentum and heat transfer performance.

Hereinafter, a description will be given of a spacing distance "d" of the first channel **41** to generate a turbulent air flow in the first channel **41** and the flow velocity of air blown toward the first channel **41** by the cooling fan **32**.

FIG. **3** illustrates that the liquid crystal panel assembly **20** is fixed to the opposite side panels **13** of the housing **10** by U-shaped coupling pieces **24**. When fixing the liquid crystal panel assembly **20** to the housing **10**, the liquid crystal panel **21** may be located a spacing distance "d" from the protection panel **12** and the spacing distance D**1** is regulated in a range of 5 to 25 mm. If D**1** is less than 5 mm, the liquid crystal panel **21** has a high risk of damage where the protection panel **12** fails due to an external impact. Alternatively, if D**1** exceeds 25 mm, the protection panel **12** has a relatively high index of refraction, which may cause a problem that an image displayed by the liquid crystal panel **21** cannot be clearly viewed.

FIGS. **4** to **7** illustrate tables of maximum temperatures of the LC with respect to solar radiation at an outdoor temperature of 45° C. and flow velocity of the first channel. In particular, FIG. **4** illustrates the table when the spacing distance D**1** of the first channel **41** is 0.004 m and, likewise, FIG. **5** illustrating a case that the spacing distance D**1** of the first channel **41** is 0.005 m, FIG. **6** illustrating a case that the spacing distance D**1** of the first channel **41** is 0.025 m and FIG. **7** illustrating a case that the spacing distance D**1** of the first channel **41** is 0.03 m.

To consider that ambient temperature can reach a maximum of about 45° C. under typical outdoor environments and solar radiation generally ranges from 600 to 850 W/m2 with a maximum of about 1100 W/m2, determining the flow velocity of air in the first channel **41** is possible, which is required to prevent degradation of liquid crystals. It is generally known that the liquid crystals are degraded at temperatures above 70° C. As such, the flow velocity of air in the first channel **41** may be determined based on the above conditions.

Referring to FIGS. **4** and **5**, if the first channel **41** has a spacing distance D**1** of 0.004 m, the air has a maximum flow velocity of 16 m/s to prevent the degradation of liquid crystals. Likewise, if the first channel **41** has a spacing distance D**1** of 0.005 m, the maximum flow velocity of air to prevent the degradation of liquid crystals is 14 m/s. Also, as illustrated in FIGS. **6** and **7**, the maximum flow velocity of air required to prevent the degradation of liquid crystals is 10 m/s, which is substantially the same in cases that the first channel **41** has the spacing distance D**1** of 0.025 m and 0.03 m, respectively.

However, if the spacing distance D**1** of the first channel **41** is too narrow, an excessive pressure drop may occur while achieving a desired flow velocity of air. On the contrary, when the spacing distance D**1** of the first channel **41** is too wide, an excessively high air flow rate may be required to achieve the desired flow velocity of air. For a common LCD device where the LCD device **21** has a size of 46 inches and the cooling fan **32** is a typical one, the spacing distance D**1** of the first channel **41** may be determined by a static pressure-flow rate curve of the cooling fan **32**.

FIG. **8** is a graph illustrating the static pressure-flow rate curve of a typical cooling fan.

With reference to FIG. **8**, the spacing distance D**1** of the first channel **41** where the pressure drop is acceptable will hereinafter be described in more detail.

When the spacing distance D**1** of the first channel **41** is 0.004 m, the maximum flow velocity of air required to prevent the degradation of liquid crystals is 16 m/s. Herein, the pressure drop may be calculated by the following equation 1:

$$\Delta P = f_\rho (LV^2)/2D_h \quad \text{[Equation 1]}$$
$$= 622 \text{ Pa}$$

wherein f is a coefficient of friction; ρ is density; L is the length of a liquid crystal panel; V is a flow velocity; and Dh is a hydraulic diameter.

When the spacing distance D**1** of the first channel **41** is 0.005 m, the maximum flow velocity of air required to prevent the degradation of liquid crystals is 14 m/s. Herein, the pressure drop may be calculated by the above equation 1, as follows.

$$\Delta P = f\rho(LV^2)/2D_h = 371 \text{ Pa}$$

Referring to FIG. **8**, which illustrates the static pressure-flow rate curve of the cooling fan, in conjunction with the pressure drop obtained from equation 1, when the spacing distance D**1** of the first channel **1** is 0.004 m, the pressure drop is 622 Pa which is considerably higher than the critical static pressure of the cooling fan **32**, that is, 392 Pa. Alternatively, if the spacing distance d of the first channel is 0.005 m, the pressure drop is 371 Pa, which is within an effective operational range of the cooling fan **32**. Accordingly, a minimum spacing distance "d**1**" of the channel **41** may be determined to be 0.005 m.

Next, referring to FIG. **8**, a description will be given of a limitation for the flow rate of air depending on the spacing distance D**1** of the first channel **41** below.

When the spacing distance D**1** of the first channel **41** is 0.025 m, the maximum flow velocity required to prevent the degradation of liquid crystals is 10 m/s. Herein, a desired flow rate of air may be calculated by the following equation 2:

$$Q = VA$$
$$= 10 * 0.6 * 0.025$$
$$= 0.15 \text{ m}^3/\text{s}$$
$$= 9 \ CMM$$

wherein V is a flow velocity, and A is a cross-sectional area.

If the spacing distance D**1** of the first channel **41** is 0.03 m, the maximum flow velocity of air required to prevent the degradation of liquid crystals is 10 m/s. Herein, the desired flow rate of air may be calculated by the above equation 2, as follows.

$$Q = VA = 10*0.6*0.03 = 0.18 \text{ m3/s} = 10.8 \text{ CMM}$$

Referring to FIG. **8**, which illustrates the static pressure-flow rate curve of the cooling fan, in conjunction with the flow rate of air obtained from equation 2, when the spacing distance D**1** of the first channel **1** is 0.025 m, the desired flow rate is 9 CMM which is within a critical flow rate of air in the cooling fan **32**, that is, 10 CMM. Alternatively, if the spacing distance D**1** of the first channel is 0.03 m, the desired flow rate is 10.8 CMM over the critical flow rate described above. Accordingly, in consideration of the flow rate condition, the spacing distance D**1** of the first channel **41** must be less than 0.025 m. Moreover, the critical flow rate of air in the cooling fan **32**, 10 CMM, is a value only possible under free flow conditions without pressure drop. However, since the pressure drop must be considered for a real flow, for example, the first channel **41** has the maximum spacing distance "d**2**" of 0.025 m.

Consequently, to consider functions of the protection panel **12** as well as the static pressure-flow rate curve of the cooling fan **32**, the spacing distance D**1** of the first channel **41** may be defined in the range of 0.005 to 0.025 m.

The above description was given of the maximum flow velocity required to prevent the degradation of liquid crystals depending on the spacing distance D**1** of the first channel **41**. However, even when the LCD device is located outside, maintaining the flow velocity of air which flows through the first channel **31** at a maximum level is unnecessary. This is because outdoor air temperature is typically below 45° C. and the solar radiation is also generally less than 1100 W/m2.

Referring to FIG. **2**, the LCD device of the present general inventive concept includes the flow control device **50** to regulate the flow rate of air in the cooling fan **32** based on the temperature around the liquid crystal panel assembly **20**, which in turn, controls the flow velocity of air flowing through the first channel **41**. That is, when the outdoor air temperature is below 45□ and the solar radiation is less than 1100 W/m2 such that the maximum flow velocity is not needed, the flow control device **50** controls the cooling fan **32** to regulate the flow velocity of air in the first channel **41** to be maintained at a lower level.

The flow control device **50** includes the cooling fan **32** to blow air to the first channel **41**, the temperature sensor **52** that measures the temperature of air emerging from the first channel **41**, and the flow rate controller **51** that controls the cooling

fan **32** according to a signal transmitted from the temperature sensor **52**. The temperature sensor **52** determines the temperature when the air absorbed heat as much as possible while passing through the first to third channels **41**, **42** and **43**, in order. For this reason, the temperature sensor **52** may be arranged near the outlet **18** provided at the partition **16**.

When the flow control device **50** imparts turbulence to air in the first channel **41**, the turbulent air flow may effectively remove heat incident on the front side of the liquid crystal panel **21**. Accordingly, the flow control device **50** must control the cooling fan **32** such that the air in the first channel **41** has a flow velocity required to impart turbulence to the air flow.

Thus, the following description will be given of flow velocity conditions for the first channel **2** to generate a turbulent air flow where the spacing distance D**1** of the first channel **41** ranges from 0.005 to 0.025 m. It is well known that the Reynolds number is an indication index to distinguish a laminar flow from a turbulent flow in a channel and may be defined by the following equation:

$$Re=VD/v$$

wherein V is a flow velocity; D is a hydraulic diameter; and v is kinematic viscosity.

Flows with a Reynolds number of not more than 2300 are defined as laminar and, if the Reynolds number exceeds 2300, the flow may be considered turbulent.

FIG. **9** illustrates a table of Reynolds numbers with respect to different flow velocities of air in the first channel depending on the spacing distance of the first channel.

With reference to FIG. **9**, achieving a minimum flow velocity of air sufficient to generate a turbulent flow is possible. Also, the flow velocity of air must be at least 4 m/s in order to generate a turbulent flow, where the channel has the spacing distance of 0.005 m. As a result, the minimum flow velocity may be assumed to be 4 m/s, which is required to reduce the solar radiation incident on the front side of the liquid crystal panel **21** using the turbulent flow. Therefore, the flow rate controller **51** in the flow control device **50** must regulate the flow rate of air in the cooling fan **32** such that the air in the first channel **41** has a controlled flow velocity of at least 4 m/s.

Consequently, the flow control device **50** may control the cooling fan **32** to maintain the flow velocity of at least 4 m/s such that a turbulent flow is generated in the channel **41**, while regulating the flow velocity up to a maximum value of 14 m/s required to prevent degradation of liquid crystals. In this case, the temperature sensor **52** measures the temperature of the air having passed through all of the first to third channels **41**, **42** and **43**, and the flow rate controller **51** regulates the flow rate of air in the cooling fan **32** according to a signal transmitted from the temperature sensor **52** such that the air in the first channel **41** has a flow velocity ranging from 4 m/s to 14 m/s.

FIG. **10** is a cross sectional view illustrating a liquid crystal display device according to another embodiment of the present general inventive concept.

The LCD device illustrated in FIG. **10** is substantially identical to that illustrated in FIG. **2**, except that the air conditioner **30** is omitted. Since the incident heat on the front side of the liquid crystal panel **21** is mostly removed by the turbulent flow flowing through the first channel **41**, the LCD device illustrated in FIG. **10** does not include any additional air conditioner **30** (see FIG. **2**).

With regard to an air flowing structure in the housing **10**, air flows through an opening **19** formed through the rear panel **15** into the cooling fan **32**. After dust filters **60** filter foreign materials from the air, the cooling fan **32** passes the filtered air through the air inlet **17**. Following this, the air sequentially flows through the first, second and third channels **41**, **42** and **43**. The air removes heat incident on the front side of the liquid crystal panel **21** while passing through the first channel **41**. Alternatively, the air also removes heat generated from the BLU **22** and the circuit board **23** during passage through the third channel **43**. Thereafter, the air is discharged through the air outlet **18** out of the housing **10**.

Similarly to the LCD device illustrated in FIG. **2**, the LCD device illustrated in FIG. **10** also has the flow control device **50** to impart turbulence to the air in the first channel **41**. The flow control device **50** includes the cooling fan **32** to blow air to the first channel **41**, the flow rate controller **51** that regulates the flow rate of air in the cooling fan **32** to control the flow velocity of air in the first channel **41**, and the temperature sensor **52** that measures temperature of the air having passed through the first channel **41** and sends the resulting signal to the flow rate controller **51**.

In this regard, the first channel is located a spacing distance D**1** in the range of 0.005 to 0.025 m, and the flow rate controller **51** controls the cooling fan **32** to maintain the flow velocity of air in the first channel **41** in the range of 4 to 14 m/s.

Such conditions, that is, the spacing distance D**1** of the first channel **41** and the flow velocity of the air in the first channel **41** have been described with reference to FIGS. **4** to **9**, therefore, no further detailed description of the same conditions will be given.

Although various embodiments of the present general inventive concept have been illustrated and described, it would be appreciated by those skilled in the art that changes may be made in these embodiments without departing from the principles and spirit of the general inventive concept, the scope of which is defined in the claims and their equivalents.

What is claimed is:

1. A display device, comprising:

a housing;

a display assembly enclosed inside the housing to form a front channel between a display panel of the display assembly and a front side of the housing; and

a flow control device to generate an air flow to the front channel and to control a velocity of the air flow according to a state of the display assembly.

2. The display device according to claim **1**, wherein:

the housing partitioned into an upper space and a lower space disposed below the upper space and includes a fan to blow the air to front channel.

3. The display device according to claim **2**, further comprising:

an air conditioner arranged in the lower space to blow air to the front channel.

4. The display device according to claim **2**, wherein:

the flow control device further includes a sensor to measure the state of the display assembly.

5. The display device according to claim **4**, wherein the flow control device further comprises:

a flow rate controller to control a flow rate of the air in the fan such that the air in the front channel has a controlled flow velocity.

6. The display device according to claim **5**, wherein:

the sensor is a temperature sensor to measure a temperature of the air having passed through the front channel, and to send a resulting signal to the flow rate controller.

7. The display device according to claim **2**, wherein the front channel comprises: an air inlet to guide air into the channel and an air outlet to discharge air from the channel; and the fan is located near the air inlet.

8. The display device according to claim **2**, wherein:

the flow rate controller regulates the flow rate of the air in the fan such that the flow velocity of air in the front channel is maintained at 4 m/s or more.

9. The display device according to claim **1**, wherein the flow control device to generate an air flow to the front channel to control a velocity of the air flow according to a state of the housing.

10. The display device according to claim **1**, wherein:

the front channel defined between the display panel assembly and the front side of the housing has a spacing distance in a range of 0.005 to 0.025 m.

11. A display device, comprising:

a housing;

a display assembly enclosed inside the housing;

a sensor to measures a temperature of air in the housing;

a fan configured to blow the air around the display assembly; and

a control device to control the fan to maintain a temperature of the housing

wherein the sensor transmits a resulting signal to the control device and the control device controls the fan based on the resulting signal.

12. The display device according to claim **11**, wherein the display assembly is enclosed inside the housing to form a front channel between a display panel of the display assembly and a front side of the housing.

13. The display device according to claim **12**, further comprising:

an air conditioner arranged in a lower space of the housing to blow air to the front channel.

14. The display device according to claim **13**, wherein the control device controls a flow rate of the air in the fan such that the air in the front channel has a controlled flow velocity.

15. The display device according to claim **12**, wherein:

the front channel comprises an air inlet to guide air into the front channel and an air outlet to discharge air from the front channel; and

the fan is located near the air inlet.

16. The display device according to claim **12**, wherein the sensor measures the temperature of the air having passed through the front channel and sends the resulting signal to the control device.

17. The display device according to claim **12**, wherein the control device generates an air flow to the front channel to control a velocity of the air flow according to a state of the housing.

18. The display device according to claim **12**, wherein the front channel defined between the display panel assembly and the front side of the housing has a spacing distance in a range of 0.005 to 0.025 m.

19. The display device according to claim **12**, wherein the control device regulates a flow rate of the air in the fan such that a flow velocity of the air in the front channel is maintained at 4 m/s or more.

20. The display device according to claim **11**, wherein the housing is partitioned into an upper space and a lower space in which the fan is disposed to blow the air to at least one of front side and back side of the display assembly.

* * * * *

UNITED STATES PATENT AND TRADEMARK OFFICE

CERTIFICATE OF CORRECTION

PATENT NO. : 8,842,253 B2
APPLICATION NO. : 13/780137
DATED : September 23, 2014
INVENTOR(S) : Jin Sub Kim

It is certified that error appears in the above-identified patent and that said Letters Patent is hereby corrected as shown below:

In the Claims

Column 11, Line 16, in Claim 11, delete “measures” and insert -- measure --, therefor.

Signed and Sealed this
Nineteenth Day of May, 2015

Michelle K. Lee

Michelle K. Lee
Director of the United States Patent and Trademark Office