# Active Matrix Liquid Crystal Displays

## Fundamentals and Applications

Willem den Boer

Newnes

# *Active Matrix Liquid Crystal Displays*

# Active Matrix Liquid Crystal Displays

Willem den Boer

ELSEVIER

AMSTERDAM • BOSTON • HEIDELBERG • LONDON
NEW YORK • OXFORD • PARIS • SAN DIEGO
SAN FRANCISCO • SINGAPORE • SYDNEY • TOKYO
Newnes is an imprint of Elsevier

Newnes

Newnes is an imprint of Elsevier
30 Corporate Drive, Suite 400, Burlington, MA 01803, USA
Linacre House, Jordan Hill, Oxford OX2 8DP, UK

Copyright © 2005, Elsevier Inc. All rights reserved.

No part of this publication may be reproduced, stored in a retrieval system, or transmitted in any form or by any means, electronic, mechanical, photocopying, recording, or otherwise, without the prior written permission of the publisher.

Permissions may be sought directly from Elsevier's Science & Technology Rights Department in Oxford, UK: phone: (+44) 1865 843830, fax: (+44) 1865 853333, e-mail: permissions@elsevier.co.uk. You may also complete your request on-line via the Elsevier homepage (http://elsevier.com), by selecting "Customer Support" and then "Obtaining Permissions."

**Library of Congress Cataloging-in-Publication Data**
Application submitted.

**British Library Cataloguing-in-Publication Data**
A catalogue record for this book is available from the British Library.

ISBN-10: 0-7506-7813-5
ISBN-13: 978-0-7506-7813-1

For information on all Newnes publications
visit our Web site at www.books.elsevier.com

05 06 07 08 09 10 10 9 8 7 6 5 4 3 2 1

Printed in the United States of America

Working together to grow
libraries in developing countries
www.elsevier.com | www.bookaid.org | www.sabre.org
ELSEVIER BOOK AID Sabre Foundation

# Contents

*Preface* . . . . . *xi*

*Chapter One: Introduction* . . . . . *1*
1.1 Historical Perspective . . . . . 1
1.2 Liquid Crystal Properties . . . . . 7
1.3 Polarization, Dichroism, and Birefringence . . . . . 11
1.4 The Twisted Nematic Cell . . . . . 14
1.5 Limitations of Passive Matrix Addressing . . . . . 17
References . . . . . 21

*Chapter Two: Operating Principles of Active Matrix LCDs* . . . . . *23*
2.1 The Case for Active Matrix . . . . . 23
2.2 Requirements for Active Matrix Switching Devices . . . . . 24
2.3 The Thin Film Transistor . . . . . 29
2.4 Thin Film Silicon Properties . . . . . 32
2.5 Amorphous Silicon TFTs . . . . . 34
2.6 Poly-Silicon TFTs . . . . . 36
2.7 Basic Pixel Circuit and Addressing Methods . . . . . 39
2.8 Diode-Based Displays . . . . . 43
2.9 Plasma-Addressed LCDs . . . . . 47
References . . . . . 48

*Chapter Three: Manufacturing of AMLCDs* . . . . . *49*
3.1 Basic Structure of AMLCDs . . . . . 49
3.2 Thin Film Processing . . . . . 50
3.3 Thin Film Properties . . . . . 61
3.4 Amorphous Silicon TFT Array Processes . . . . . 65
3.5 Poly-Si TFT Array Processes . . . . . 69
3.6 Color Filter Array Process . . . . . 73
3.7 LC Cell Assembly . . . . . 74
3.8 Module Assembly . . . . . 77



Samsung Exhibit 2003, Page 5 of 11
MRI v. Samsung - IPR2023-01203

3.9 Yield Improvements and Considerations . . . . . 79
3.10 Trends in Manufacturing . . . . . 83

***Chapter Four: AMLCD Electronics . . . . . 87***
4.1 Drive Methods . . . . . 87
4.2 Row Select and Column Data Drivers . . . . . 93
4.3 Timing Controllers, Display Controllers, and Interfaces . . . . . 99
4.4 Integration of Electronics on Glass . . . . . 102
4.5 Backlights . . . . . 105
4.6 Power Consumption . . . . . 109
References . . . . . 110

***Chapter Five: Performance Characteristics . . . . . 113***
5.1 Basics of Photometry and Colorimetry . . . . . 113
5.2 Brightness and Contrast Ratio . . . . . 117
5.3 Viewing Angle Behavior . . . . . 121
5.4 Color and Gray Scale Performance . . . . . 123
5.5 Response Time and Flicker . . . . . 129
5.6 Resolution and Size . . . . . 131
5.7 Image Artifacts . . . . . 134
References . . . . . 137

***Chapter Six: Improvement of Image Quality in AMLCDs . . . . . 139***
6.1 Brightness Improvements . . . . . 139
6.1.1 Increased Color Filter Transmission . . . . . 140
6.1.2 High-Aperture Ratio Designs . . . . . 140
6.1.3 Alternative Color Filter Arrangements . . . . . 144
6.1.4 Brightness Enhancement Films . . . . . 145
6.2 Readability Under High Ambient Lighting Conditions . . . . . 146
6.3 Color Gamut Improvements . . . . . 149
6.4 Wide Viewing Angle Technologies . . . . . 150
6.4.1 Compensation Films . . . . . 151
6.4.2 In-Plane-Switching Mode . . . . . 152
6.4.3 Vertical Alignment . . . . . 157
6.4.4 A Comparison and Other Viewing Angle Improvement Methods . . . . . 162
6.5 Enhancement of Video Performance . . . . . 166
6.5.1 Response Time Compensation . . . . . 167
6.5.2 Emulation of an Impulse-Type Display . . . . . 169



Samsung Exhibit 2003, Page 6 of 11
MRI v. Samsung - IPR2023-01203

6.6 Large Size . . . . . 172
References . . . . . 176

***Chapter Seven: Special AMLCD Configurations . . . . . 179***
7.1 Ultra-High-Resolution Monitors and Improved Gray Scale . . . . . 179
7.2 Reflective and Transflective Displays . . . . . 182
7.3 Field-Sequential Color LCDs . . . . . 185
7.4 Stereoscopic AMLCDs . . . . . 187
7.5 Touch Screen Technologies . . . . . 190
References . . . . . 196

***Chapter Eight: Alternative Flat Panel Display Technologies . . . . . 197***
8.1 Plasma Displays . . . . . 199
8.2 Electroluminescent Displays . . . . . 201
8.2.1 TFEL Displays . . . . . 202
8.2.2 Organic LED Displays . . . . . 203
8.2.3 Passive Matrix Organic LED Displays . . . . . 205
8.2.4 Active Matrix Organic LED Displays . . . . . 206
8.3 Electronic Paper and Flexible Displays . . . . . 209
8.4 Organic Thin Film Transistors . . . . . 213
8.5 Front and Rear Projection Displays . . . . . 214
References . . . . . 221

***Chapter Nine: Active Matrix Flat Panel Image Sensors . . . . . 223***
9.1 Flat Panel Image Sensors . . . . . 223
9.2 Direct Conversion Detectors . . . . . 225
9.3 Indirect Conversion Detectors . . . . . 228
9.4 Applications of Flat Panel X-Ray Sensors . . . . . 233
References . . . . . 234

***Index . . . . . 235***



Samsung Exhibit 2003, Page 7 of 11
MRI v. Samsung - IPR2023-01203

The AMLCD manufacturers are supported by a large infrastructure of equipment and material suppliers, which continue to improve efficiency and reduce cost. They include color filter, polarizer, and optical film manufacturers, driver IC and controller IC vendors, packaging firms, backlight manufacturers, and suppliers of materials such as LC fluids and alignment layers.

The momentum the LCD industry has gained is difficult to supplant by alternative flat panel display technologies, even if, on paper, they may have advantages over LCDs.

## 1.2 Liquid Crystal Properties

After their discovery by Reinitzer in 1888, liquid crystals were, for many decades, considered interesting only from an academic point of view. Liquid crystals are an intermediate phase between crystalline solids and isotropic liquids, and combine certain characteristic properties of the crystal structure with those of a deformable fluid. Display devices utilize both their fluidity and the anisotropy associated with their crystalline character. The anisotropy causes the dielectric constant and refractive index of the LC fluid to depend on the orientation of its molecules.

Nematic liquid crystals are commercially the most interesting type. Upon heating, most crystalline solids undergo a phase transition to an isotropic liquid. The nematic intermediate phase (mesophase) occurs in certain, mostly organic, substances in a temperature range between the solid and isotropic liquid state. Figure 1.3 shows an example of the molecular structure of a liquid crystal, p-methoxybenzylidene-p-n-butylaniline (MBBA), with its nematic temperature range.

The liquid crystal (LC) molecules are generally elongated in shape and have a length of around 2 nm. Because of their "cigar" shape they tend to line up more or less parallel to each other in the lowest energy state. The average orientation axis along the molecules is a unit vector **n**, called the director. Nematic LC molecules are not polar, so there is no differentiation between **n** and **–n**. The dielectric constant and refractive index of the LC is different along the director and perpendicular to the director, as shown in Fig. 1.4, giving rise to dielectric and optical anisotropy, respectively. The dielectric anisotropy

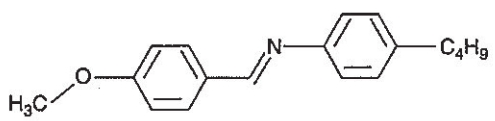


**Figure 1.3: Example of molecular structure of LC – MBBA, with a nematic range of 21–48°C.**



Samsung Exhibit 2003, Page 8 of 11
MRI v. Samsung - IPR2023-01203

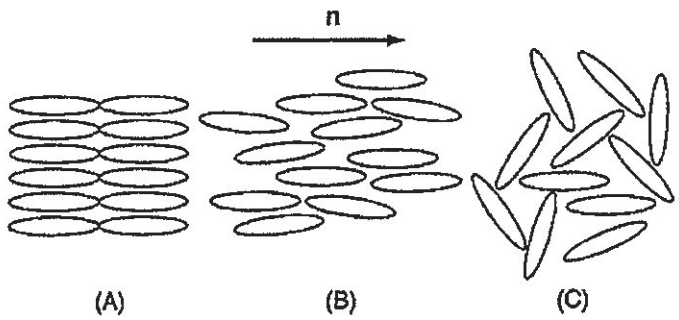


**Figure 1.4: Orientation of LC molecules in (A) smectic, (B) nematic, and (C) isotropic phase.**

makes it possible to change the orientation of the LC molecules in an electric field, crucial for application in electro-optical devices. The optical anisotropy leads to birefringence effects (described later in this chapter) and is essential for the modulation of polarized light in display operation.

In bulk, liquid crystal tends to form microdroplets. Within the droplets there is one director orientation, but the director can be different for adjacent droplets. Although most high-purity liquid crystals are transparent, this explains the milky appearance of bulk LC, as scattering of light occurs at the boundaries of the microdroplets.

When nematic LC is heated beyond a certain temperature, a phase transition occurs to an isotropic liquid. The nematic-isotropic transition temperature is often referred to as the clearing point or clearing temperature because of the drastic reduction in light scattering that occurs when the fluid no longer consists of microdroplets with different directors. Just below the clearing point, the optical and dielectric anisotropy of the LC fluid starts to decline, until at the clearing point there is a single dielectric constant and refractive index in the isotropic state. Above the clearing point, the LC fluid no longer has the desirable optical and dielectric anisotropy, and display operation fails.

When the temperature is lowered, the LC fluid undergoes another phase transition from the nematic to the smectic phase. In the smectic phase, the LC molecules form a layered structure and obtain a higher viscosity to become more grease-like. When approaching the smectic phase, the LC response to an electric field change becomes very sluggish, and below the transition temperature the display operation fails.

A large variety of nematic liquid crystals has been synthesized over the years, each with its own molecular formula and nematic temperature range. For MBBA in the example of Fig. 1.3, the nematic range is 21–48°C. This range is too limited for practical applications. Commercial fluids generally consist of a mixture of two or more liquid crystal components and have a much wider nematic range.



Samsung Exhibit 2003, Page 9 of 11
MRI v. Samsung - IPR2023-01203

CHAPTER

# 3

# Manufacturing of AMLCDs

In this chapter the steps in the basic manufacturing process of AMLCD panels will be described. Panel manufacturing is usually subdivided in TFT array manufacturing, LC assembly, and module assembly. TFT array production shows some similarities with semiconductor manufacturing. Many of the methods, types of equipment, and expertise acquired in the semiconductor industry have therefore been successfully applied to AMLCD array processing. They include yield optimization techniques and clean room and facility operation, and are applied to the color filter plate manufacturing as well. The front end of AMLCD manufacturing is highly automated with expensive equipment and is therefore very capital-intensive. Back-end processing (module assembly and assembly of the final product) is more labor-intensive and has often been moved to low-labor-cost regions in Asia.

## 3.1 Basic Structure of AMLCDs

In Fig. 3.1 a cutout view of a basic TFT LCD panel is shown. It consists of a TFT array glass plate and a color filter array plate. The two are separated by 4–5 μm and form the sandwich for the liquid crystal layer. At the periphery of the display viewing area (Fig. 3.2), a glue seal bonds the two glass plates together and also prevents moisture and contamination from entering the LC fluid.

The row and column drivers are attached to ledges at the edges of the TFT array glass plate to supply the address signals to the LC pixels. In a-Si TFT LCDs they are packaged on a flexible tape in a so-called "tape carrier package" (TCP) and attached to the glass by tape automated bonding (TAB). Alternatively, the row and column drivers may be attached upside down directly to the glass with "chip on glass" (COG) technology. The row and column drivers receive their signals from a printed circuit board with controller circuitry, including a timing controller. The panel is completed by adding a number of optical films to enhance the viewing properties and uniformity, a backlight assembly, and an enclosure.



Samsung Exhibit 2003, Page 10 of 11
MRI v. Samsung - IPR2023-01203

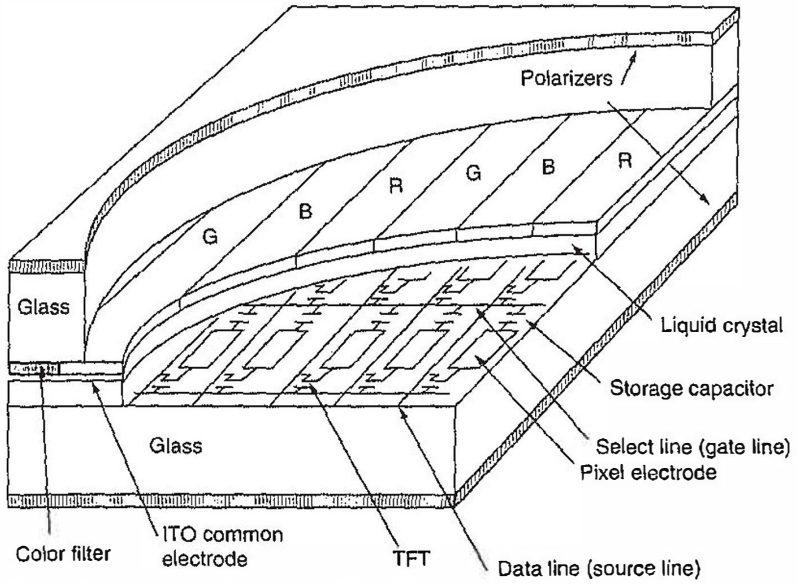


**Figure 3.1: Cutout view of a TFT LCD.**

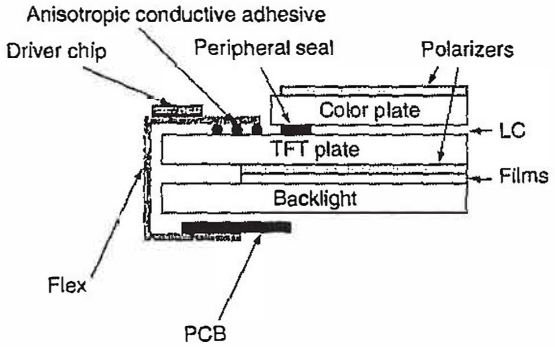


**Figure 3.2: Cross section of an edge of a TFT LCD.**

## 3.2 Thin Film Processing

The pixel array circuitry is patterned on one of the two glass substrates between which the LC layer is sandwiched. Since the thickness of the liquid crystal layer in an AMLCD is only 4–5 μm, the active matrix consists of thin film circuitry with a total thickness



Samsung Exhibit 2003, Page 11 of 11
MRI v. Samsung - IPR2023-01203