UNITED STATES PATENT AND TRADEMARK OFFICE

BEFORE THE PATENT TRIAL AND APPEAL BOARD

K/S HIMPP,
Petitioner

v.

BRAGI GmbH,
Patent Owner

Case: IPR2023-01204
U.S. Patent No. 10,117,014

PATENT OWNER'S MOTION TO AMEND

TABLE OF CONTENTS

I. INTRODUCTION 1

II. STATEMENT OF REQUESTED RELIEF 1

III. THE SUBSTITUTE CLAIMS MEET ALL STATUTORY AND REGULATORY REQUIREMENTS OF 35 U.S.C. § 316 and 37 C.F.R. § 42.121 1

- A. Listing of Proposed Substitute Claims. 2
- B. The Number of Substitute Claims is Reasonable. 2
- C. The Substitute Claims Respond to Patentability Grounds Involved in this Trial. 2
- D. The Substitute Claims Do Not Broaden the Claim Scope or Introduce New Subject Matter 3
  - 1. The Substitute Claims Do Not Broaden Claim Scope 3
  - 2. The Substitute Claims Do Not Introduce New Matter 4

IV. THE LEVEL OF ORDINARY SKILL IN THE ART 5

V. THE SCOPE AND CONTENT OF THE PRIOR ART 6

VI. CLAIM CONSTRUCTION 6

VII. THE SUBSTITUTE CLAIMS ARE PATENTABLE OVER THE ART 7

- A. Ground 1 – Hain 7
- B. Ground 2 – Steinbrecher 11
- C. Grounds 3-4 12
- D. Grounds 5-6 13

VIII. CONCLUSION 15

TABLE OF AUTHORITIES

Cases **Page(s)**

Aqua Prods., Inc. v. Matal,
872 F.3d 1290 (Fed. Cir. 2017) 7

Intuitive Surgical, Inc. v. Ethicon LLC,
IPR2018-00933, Paper 31 (PTAB Dec. 3, 2019) 2

Lectrosonics, Inc. v. Zaxcom, Inc.,
IPR2018-01129, Paper 15 (PTAB Feb. 25, 2019).....2, 3, 4

Phillips v. AWH Corp.,
415 F.3d 1303 (Fed. Cir. 2005) 6

Toyota Motor Corp. v. Cellport Sys., Inc.,
IPR2015-00633, Paper No. 11 (Aug. 14, 2015) 6

Statutes

35 U.S.C. § 316 1

35 U.S.C. § 316(d) 1

35 U.S.C. § 316(d)(1)(B) 2

Other Authorities

37 C.F.R. § 42.12(a)(2)(ii) 4

37 C.F.R. § 42.100 6

37 C.F.R. § 42.121 .....1, 2, 4

TABLE OF EXHIBITS

Exhibit	Description	Previously Submitted
2001	Declaration of Dr. Darrin Young, PhD	
2002	CV of Dr. Darrin Young, PhD	

I. INTRODUCTION

Bragi GmbH ("Patent Owner" or "PO") submits this motion to amend U.S. Patent No. 10,117,014 ("the '014 Patent"). PO respectfully requests that the Board grant this motion to amend and issue the corresponding substitute claims presented herein.

II. STATEMENT OF REQUESTED RELIEF

First, PO respectfully requests preliminary guidance on this motion pursuant to the Board's pilot program. *See* Patent Trial and Appeal Board Consolidated Trial Practice Guide (Nov. 2019) at 67.

Second, PO respectfully requests that the Board grant this motion with respect to each corresponding substitute claim, proposed Claims 14-26 to replace original Claims 1-13, respectively.

III. THE SUBSTITUTE CLAIMS MEET ALL STATUTORY AND REGULATORY REQUIREMENTS OF 35 U.S.C. § 316 and 37 C.F.R. § 42.121

A motion to amend must (1) propose a reasonable number of substitute claims, (2) that respond to a ground of unpatentability involved in the trial, (3) that do not enlarge the scope of the claims or introduce new matter, and (4) are not shown by a preponderance of the evidence to be unpatentable. *See* Memorandum re: Guidance on Motions to Amend in view of *Aqua Products* (Nov. 21, 2017) at 2; 35 U.S.C. § 316(d); 37 C.F.R. § 42.121. It is Petitioner's burden to show that the substitute claims

are unpatentable. *Lectrosonics, Inc. v. Zaxcom, Inc.*, IPR2018-01129, Paper 15 at 4 (PTAB Feb. 25, 2019) (precedential).

A. Listing of Proposed Substitute Claims

PO submits substitute claims as shown in Appendix A (the "Substitute Claims") as required by 37 C.F.R. § 42.121(b).

B. The Number of Substitute Claims is Reasonable

"There is a rebuttable presumption that a reasonable number of substitute claims per challenged claim is one (1) substitute claim." *Lectrosonics* at 4. Here, PO proposes substitute claims 14-26 for original claims 1-13, respectively, which constitute a one-for-one substitution. This is reasonable and thus satisfies 35 U.S.C. § 316(d)(1)(B) and 37 C.F.R. § 42.121(a)(3). *See Intuitive Surgical, Inc. v. Ethicon LLC*, IPR2018-00933, Paper 31 at 9 (PTAB Dec. 3, 2019); *see also Lectrosonics* at 45-46.

C. The Substitute Claims Respond to Patentability Grounds Involved in this Trial

Proposed Substitute Claims 14-26 respond to the grounds asserted in the Petition (Paper 1). For example, this motion proposes adding certain limitations (discussed in detail below in Section VII) to those claims to distinguish them from Hain (Ex. 1004) (regarding claims 1-3 and 5 in Ground 1); Steinbrecher (Ex. 1006) (regarding claims 10 and 11 in Ground 2); Shaffer (Ex. 1003) and Hain (regarding claims 1-7 and 9 in Ground 3); Shaffer, Hain, and Sorensen (Ex. 1005) (regarding

claims 4 and 6-8 in Ground 4); Shaffer and Steinbrecher (regarding claims 10-13 in Ground 5); and Shaffer, Steinbrecher and Sorensen (regarding claims 10-13 in Ground 6). This motion seeks to amend those claims to address Petitioner's arguments. *Compare* Pet. and Ex. 1001 *with* Appx. A (Proposed Substitute Claims). Further, as explained below in Section VII, these amendments directly overcome the grounds of unpatentability involved in this trial.

D. The Substitute Claims Do Not Broaden the Claim Scope or Introduce New Subject Matter

"A motion to amend may not present substitute claims that enlarge the scope of the claims of the challenged patent or introduce new subject matter." *Lectrosonics* at 6-8 (citing 35 U.S.C. § 316(d)(3); 37 C.F.R. § 41.121(a)(2)(ii)). PO's proposed claims comply with both of these requirements.

1. The Substitute Claims Do Not Broaden Claim Scope

First, the proposed substitute claims retain all of their original features and only add narrowing elements. The proposed amendments rewrite each of claims 1-13, limiting the method and/or system by clarifying that the wireless earpieces are "in-ear" wireless earpieces with powering circuitry housed within the in-ear wireless earpieces, and further clarify that the smart case comprises a rechargeable battery configured to receive charge inductively and to charge the in-ear wireless earpieces.

Each of these additions is made for the purpose of further distinguishing the claims over the prior art raised in the Petition and therefore narrows the claim scope

in compliance with 37 C.F.R. § 42.12(a)(2)(ii). *See Lectrosonics* at 7 (noting that "a proposed substitute claim adding a novel and nonobvious feature or combination to avoid the prior art in an instituted ground of unpatentability will not enlarge the scope of the claims").

2. The Substitute Claims Do Not Introduce New Matter

As required by 37 C.F.R. § 42.121(b), the proposed substitute claims are supported by the original non-provisional application and thus do not introduce new subject matter as required by 37 C.F.R. § 42.121(a)(2)(ii). The '014 Patent issued from U.S. Patent Application No. 15/245,031 ("the '031 Application"), which is found at pages 1-36 of Exhibit 1008. For the purposes of this motion, PO identifies the following portions of the '031 Application as providing support for the proposed amendments. In addition, PO submits the declaration of Dr. Young (Ex. 2001). Dr. Young's declaration and the cited portions of the '031 Application show that a person of ordinary skill in the art ("POSA") would have understood, based on the disclosures of the '031 Application, that the inventor possessed the Substitute Claims as of August 29, 2015. Ex. 2001 at ¶¶ 15. Lastly, the written description of the '031 Application is sufficient to inform a POSA how to both make and use the invention as recited in the proposed Substitute Claims. Ex. 2001 at ¶¶ 57-58.

Exemplary citations for each limitation of the Substitute Claims are summarized below (and detailed in the Declaration of Dr. Young, *see* Ex. 2001 at ¶¶ 54-57).

a) Support Regarding Added Limitations Common to Each Substitute Claim

The following features are additions to each Substitute Claim, and Dr. Young's testimony confirms that the inventor was in possession of these features (and each claim as a whole) at the time of filing the '031 Application. Ex. 2001 at ¶¶ 54-57.

The '031 Application discloses "in-ear" wireless earpieces, wherein the left and right ear pieces are configured to fit into a user's ears. *See* [4:19-20]; Figure 1; Figure 2; Figure 4.

The '031 Application discloses wherein the smart case "comprises a rechargeable battery configured to receive charge inductively and to charge the in-ear wireless earpieces." *See* [3:27-29]; [5:3-15]; [6:6-20]; [7:5-13]; [9:14-20]; [9:26-10:2].

IV. THE LEVEL OF ORDINARY SKILL IN THE ART

In this motion, PO and its expert adopt Petitioner's description of the level of skill of a POSA: at least a bachelor's degree in Electrical Engineering, or equivalent experience, and one to two years of experience in the field of wireless electronic

devices and battery systems, particularly wireless earpieces such as wireless headphones and hearing aids. Petition, 17. *See also* Ex. 2001 at ¶¶ 39-40.

V. THE SCOPE AND CONTENT OF THE PRIOR ART

PO presumes Petitioner has set forth what it believed to be the closest prior art in its Petition. As no prior art of record from the original prosecution of the ’031 Application is cited by Petitioner as a basis for unpatentability in this IPR proceeding other than Shaffer, it is undisputed that such prosecution-related prior art of record does not disclose or suggest the elements of the originally issued claims (as confirmed by the USPTO’s issuance of the ’014 Patent over that prior art). Similarly, no prior art of record describes or suggests the additional elements recited in the Substitute Claims, as described below.

VI. CLAIM CONSTRUCTION

Under 37 C.F.R. § 42.100, claim terms should be given “their ordinary and customary meaning” as would be understood by a POSA in question at the time of the invention, in light of the claim language, the specification, and the prosecution history. *Phillips v. AWH Corp.*, 415 F.3d 1303, 1312 (Fed. Cir. 2005). The Board only construes the claims when necessary to resolve the underlying controversy. *Toyota Motor Corp. v. Cellport Sys., Inc.*, IPR2015-00633, Paper No. 11 at 16 (Aug. 14, 2015). At this stage, there is not currently a construction-related dispute. Ex. 2001 at ¶ 48.

VII. THE SUBSTITUTE CLAIMS ARE PATENTABLE OVER THE ART

Although PO does not bear the burden of persuasion or production regarding the patentability of the substitute claims, PO nevertheless sets forth reasons why the art does not teach or suggest the amended subject matter. *Aqua Prods., Inc. v. Matal*, 872 F.3d 1290, 1296 (Fed. Cir. 2017). This motion and Dr. Young's declaration (Ex. 2001 at ¶¶ 60-73) provide support.

A. Ground 1 – Hain

The Petition states that for Ground 1, Hain anticipates claims 1-3 and 5. Petition, 17. The Petition states that Hain discloses limitation [1A] (Petition, 19), but that is incorrect. Ex. 2001 at ¶ 60. Original claim 1 corresponds to proposed substitute claim 14. Amended claim 14 requires that the "powering circuitry of the in-ear wireless earpieces utilizing a low power mode in response to detecting a magnetic field is applied to one or more of the in-ear wireless earpieces" and "altering the power sent to the circuitry of the in-ear wireless earpiece to a high power mode in response to detecting a magnetic field is not applied to one or more of the in-ear wireless earpieces." Ex. 2001 at ¶ 61. Petitioner points to Figure 2 of Hain for limitation [1B], which teaches that if there is a magnetic field applied to one hearing aid but not the other, such as by a telephone receiver emitting a magnetic field, the system will operate in "telephone mode." Ex-1006, Figure 2, [0004], [0010]. Therefore, Hain teaches the opposite of what limitation [1B] (now proposed

substitute claim 14) teaches. Ex. 2001 at ¶ 61. In other words, Hain teaches that when a single hearing aid detects a magnetic field (and importantly, the other hearing aid does not detect a magnetic field), the hearing aid detecting the magnetic field operates in high power mode (Petitioners appear to map the "high power mode" of the claims to Hain's "telephone mode" described above). On the other hand, in the '014 Patent, the wireless earpiece will utilize a high power mode in response to detecting *the absence* of a magnetic field, and a low power mode in response to detecting the presence of a magnetic field in one ear piece. Ex. 2001 at ¶ 62.

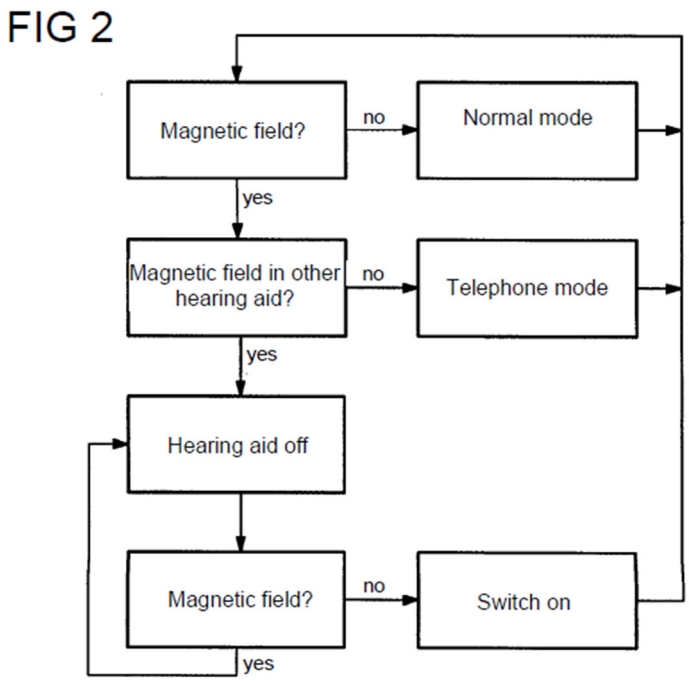

Ex-1004, Figure 2.

Hain further discloses that if both hearing aids detect a magnetic field, such as by being located in the disclosed storage box, the hearing aids are automatically

switched off. *Id.* at [0013]. This very functionality – automatically switching off the hearing aids when both detect a magnetic field as opposed to when only one hearing aid detects a magnetic field – is the solution Hain claims to provide. *Id*. at [0013].

As shown in Figure 5 of the ’014 Patent, reproduced below, if one or more wireless earpieces detect a magnetic field, they will operate in a “low power” mode as they are coupled to the smart case for charging. When no magnetic field is detected by one or more of the wireless earpieces, then the wireless earpiece remains powered on (or in a “high power” mode). This is the opposite of the telephone mode of Hain Petitioners point to, when a singular hearing aid detects a magnetic field, then it operates in what Petitioners map the “high power” mode to. Ex. 2001 at ¶ 62.

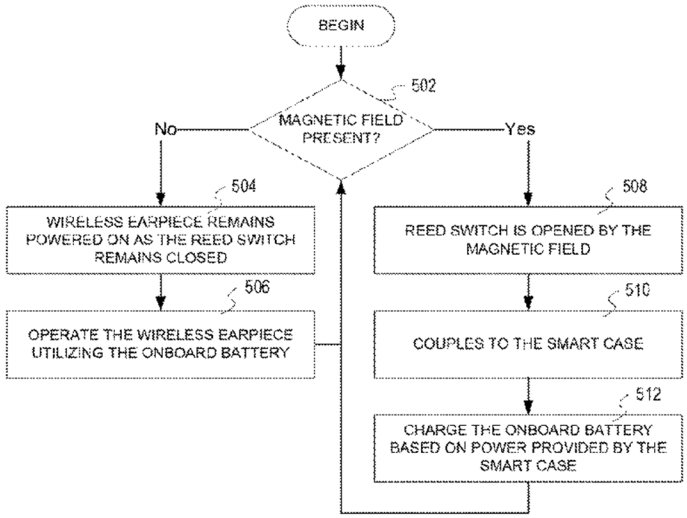

FIG. 5

Ex-1001, Figure 5.

Therefore, Hain does not disclose "powering circuitry of the in-ear wireless earpieces utilizing a low power mode in response to detecting a magnetic field is applied to one or more of the in-ear wireless earpieces" and "altering the power sent to the circuitry of the in-ear wireless earpiece to a high power mode in response to detecting a magnetic field is not applied to one or more of the in-ear wireless earpieces." Ex. 2001 at ¶ 65.

B. Ground 2 – Steinbrecher

The Petition states that Steinbrecher discloses claims 10 and 11 (Petition, 26), which corresponds to proposed substitute claims 23 and 24, respectively. However, Steinbrecher does not disclose that the smart case "comprises a rechargeable battery configured to receive charge inductively and to charge the left and right in-ear wireless earpieces" as required by proposed substitute claims 23 and 24. Ex. 2001 at ¶ 66. Rather, Steinbrecher discloses a charging shell void of a rechargeable battery, instead comprising a coil. In Steinbrecher's teaching, the coil is charged via the charging shell being plugged into an outlet, not via a rechargeable battery configured to receive charge inductively as claimed. Ex. 2001 at ¶ 67.

For example, Figure 1 of Steinbrecher, reproduced below, depicts a charging shell, which comprises "a primary coil arranged in the first circuit arrangement" that is "connected by the mains plug 3 to the electrical network" or "with a plug-in power supply." Ex-1006, [0009], [0024].

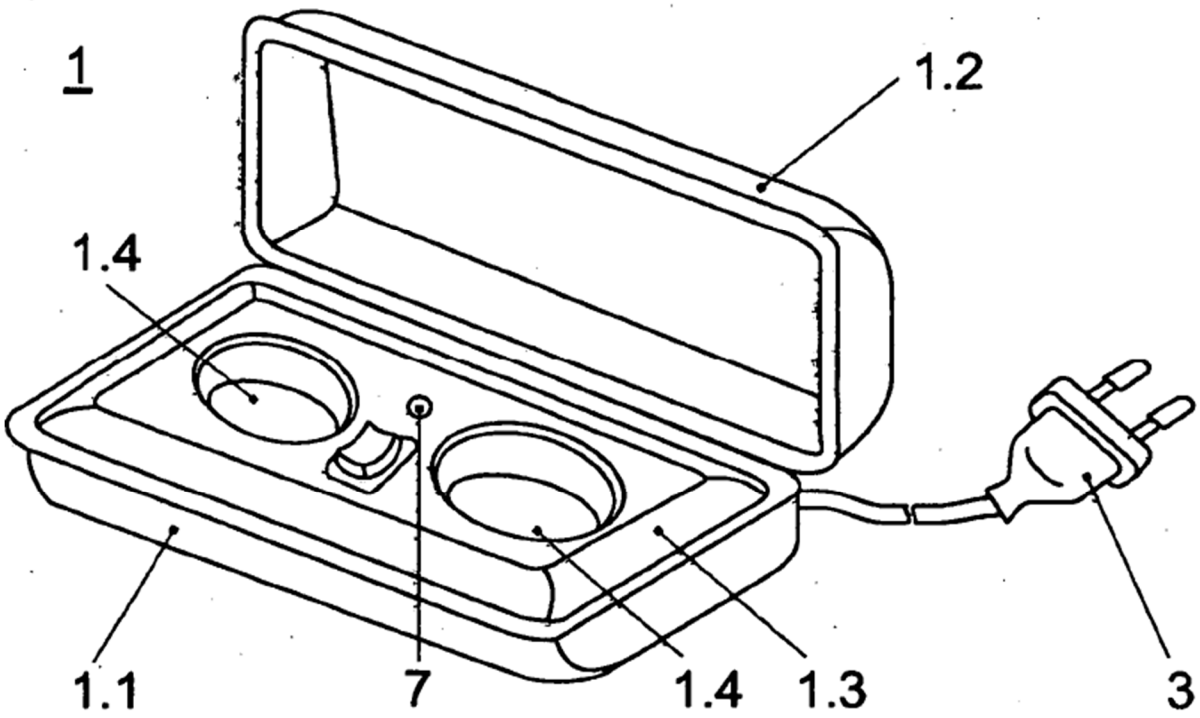

Ex. 1006, Fig. 1.

Steinbrecher does not disclose a rechargeable battery at all, let alone one to receive charge inductively. Therefore, Steinbrecher does not anticipate proposed substitute claims 23 and 24. Ex. 2001 at ¶ 68.

C. Grounds 3-4

Grounds 3-4 rely on a combination of references, each of which includes Hain. *See* Petition, 34-66. As discussed above, Hain does not disclose "powering circuitry of the in-ear wireless earpieces utilizing a low power mode in response to detecting a magnetic field is applied to one or more of the in-ear wireless earpieces" and "altering the power sent to the circuitry of the in-ear wireless earpiece to a high power mode in response to detecting a magnetic field is not applied to one or more

of the in-ear wireless earpieces," as claimed by the proposed substitute claim 14 (the substitute for original claim 1). Petitioner continues to rely on Hain for this limitation in Grounds 3 and 4. Claims 2-9 (proposed substitute claims 15-22) each depend from claim 1 (proposed substitute claim 14), and fail for the same reasons as discussed with respect to claim 1. Ex. 2001 at ¶ 69.

Therefore, Grounds 3 and 4 fail for the same reason as explained with respect to Ground 1, because Hain does not disclose "powering circuitry of the in-ear wireless earpieces utilizing a low power mode in response to detecting a magnetic field is applied to one or more of the in-ear wireless earpieces," and "altering the power sent to the circuitry of the in-ear wireless earpiece to a high power mode in response to detecting a magnetic field is not applied to one or more of the in-ear wireless earpieces." Ex. 2001 at ¶ 70.

D. Grounds 5-6

Grounds 5-6 rely on a combination of references, including some combination of Shaffer, Steinbrecher and Sorensen. *See* Petition, 66-85. Grounds 5-6 challenge claims 10-13 (corresponding to proposed substitute claims 23-26). However, none of these references disclose a smart case comprising "a rechargeable battery configured to receive charge inductively and to charge the left and right in-ear wireless earpieces" as required by proposed substitute claim 23 (the independent claim challenged by Grounds 5-6). Ex. 2001 at ¶ 71.

As discussed above, Steinbrecher discloses a charging shell void of a rechargeable battery, instead comprising a coil. Ex. 2001 at ¶ 72. In Steinbrecher's teaching, the coil is charged via the charging shell being plugged into an outlet, not via a rechargeable battery configured to receive charge inductively as claimed. Sorensen similarly makes no reference to a rechargeable battery of the charging station. Ex. 2001 at ¶ 72. Rather, Sorensen discloses a charging station with a link to a server or PC. Ex-1005 at 6:5-8; Figure 2. Sorensen refers to batteries, but fails to disclose a rechargeable battery as required by the proposed substitute claims. Shaffer also fails to disclose this limitation. Ex. 2001 at ¶ 73. Rather, Shaffer similarly discloses a charging cable for charging earbud batteries by computer and/or power source. Ex-1003 at [0052]. Shaffer further discloses that the case charges earbuds via a power input jack to charge earbud batteries. *Id.* at [0054]. Shaffer discloses that the case may contain an internal rechargeable battery, but not a rechargeable battery configured to receive charge inductively. *Id.* at [0056].

Importantly, none of these references teaches a smart case comprising a rechargeable battery, which receives charge inductively and charges the in-ear wireless earpieces. These claim limitations are required by independent claim 23, and therefore, dependent claims 24-26 fail for the same reason and the independent claim from which each depends from. Ex. 2001 at ¶ 75.

Therefore, Grounds 5 and 6 fail because none of the cited references disclose a smart case comprising "a rechargeable battery configured to receive charge inductively and to charge the left and right in-ear wireless earpieces."

VIII. CONCLUSION

PO requests the Board grant this motion to amend as to the corresponding substitute claims for each of original claims 1-13.

Date: June 11, 2024

Respectfully submitted,

/s/ Richard A. Kamprath
Richard A. Kamprath
Reg. No. 65,320
rkamprath@mckoolsmith.com
MCKOOL SMITH, P.C.
300 Crescent Court, Suite 1500
Dallas, TX 75201
Telephone: (214) 978-4210
Facsimile: (214) 978-4044

Counsel for Patent Owner,
Bragi GmbH

CERTIFICATION OF SERVICE

The undersigned hereby certifies that the foregoing **PATENT OWNER'S MOTION TO AMEND** has been served on Petitioner via email on the following counsel of record for Petitioner:

Haixia Lin
haixia.lin@wilmerhale.com
Brian Lambson
Brian.lambson@wilmerhale.com
Trishan Esram
Trishan.esram@wilmerhale.com

Dated: June 11, 2024

By: */s/ Richard A. Kamprath*
Richard A. Kamprath
Reg. No. 65,320

CERTIFICATION OF WORD COUNT

The undersigned hereby certifies that the portions of the above-captioned P**ATENT OWNER'S MOTION TO AMEND** complies with the page limits of § 42.24(a) because it does not contain more than 25 pages. This paper also complies with the typeface requirements of 37 C.F.R.42.6(a)(2)(ii) and the type style requirements of 337 C.F.R.42.6(a)(2)(iii) and (iv).

APPENDIX A – SUBSTITUTE CLAIMS

Claim 14. [Proposed substitute for claim 1] A method for managing an in-ear wireless earpiece, comprising:

powering circuitry of the in-ear wireless earpiece utilizing a low power mode in response to detecting a magnetic field is applied to one or more of the in-ear wireless earpiece;

wherein the powering circuitry is housed within the in-ear wireless earpieces, and

altering the power sent to the circuitry of the in-ear wireless earpiece to a high power mode in response to detecting a magnetic field is not applied to one or more of the in-ear wireless earpieces.

Claim 15. [Proposed substitute for claim 2] The method of claim 14, further comprising:

operating the in-ear wireless earpiece utilizing an onboard battery in response to detecting the magnetic field is not applied to the in-ear wireless earpiece.

Claim 16. [Proposed substitute for claim 3] The method of claim 14, further comprising:

charging an onboard battery of the in-ear wireless earpiece in response to detecting a magnetic field is applied to the in-ear wireless earpiece.

Claim 17. [Proposed substitute for claim 4] The method of claim 14, wherein the magnetic field is applied by a magnet of a smart case configured to receive the in-ear wireless earpiece, wherein the smart case comprises a rechargeable battery configured to receive charge inductively and to charge the in-ear wireless earpieces.

Claim 18. [Proposed substitute for claim 5] The method of claim 14, wherein the magnetic field is detected by a reed switch of the in-ear wireless earpiece.

Claim 19. [Proposed substitute for claim 6] The method of claim 14, further comprising:

coupling the in-ear wireless earpiece to a smart case, wherein:

-the smart case comprises a rechargeable battery configured to receive charge inductively and to charge the in-ear wireless earpieces; and

the smart case applies a magnetic field to the in-ear wireless earpiece.

Claim 20. [Proposed substitute for claim 7] The method of claim 14, wherein the magnetic field is detected by a reed switch integrated in magnetic

contacts that interface with a smart case for securing the in-ear wireless earpiece, the smart case comprising a rechargeable battery configured to receive charge inductively and to charge the in-ear wireless earpieces.

Claim 21. [Proposed substitute for claim 8] The method of claim 14, further comprising:

synchronizing data between the in-ear wireless earpiece and a smart case in response to detecting the magnetic field.

Claim 22. [Proposed substitute for claim 9] The method of claim 14, wherein the low power mode is a power saver mode.

Claim 23. [Proposed substitute for claim 10] A system comprising:

a left in-ear earpiece and a right in-ear earpiece each of the left in-ear earpiece and the right in-ear earpiece comprising circuitry operating the in-ear earpiece, a battery powering the circuitry operating the in-ear earpiece, and a reed switch connecting the battery to the circuitry, wherein the reed switch connects the circuitry to the battery when a magnetic field is not detected and wherein the reed switch disconnects the circuitry from the battery when a magnetic field is detected;

a smart case housing for charging the left in-ear earpiece and the right in-ear earpiece, wherein the smart case comprises a rechargeable battery configured to receive charge inductively and to charge the left and right in-ear wireless earpieces;

a first receptacle for receiving the left in-ear earpiece disposed within the smart case housing;

a second receptacle for receiving a right in-ear earpiece disposed within the smart case housing;

a first interface associated with the first receptacle for electrically connecting the smart case to the left in-ear earpiece;

a second interface associated with the second receptacle for electrically connecting the smart case to the right in-ear earpiece;

an intelligent control disposed within the smart case housing and operatively connected to the first interface and the second interface.

Claim 24. [Proposed substitute for claim 11] The system of claim ~~10~~ 23 wherein the smart case further comprises a display.

Claim 25. [Proposed substitute for claim 12] The system of claim ~~11~~ 24 wherein the display is moveably connected to the smart case to transition from a first position to a second position.

Claim 26. [Proposed substitute for claim 13] The system of claim ~~12~~ 25 wherein the smart case further comprises at least one manual input for receiving user input to provide additional functionality.