US 20150200554A1

(19) United States

(12) Patent Application Publication

MARKS et al.

(10) Pub. No.: US 2015/0200554 A1

(43) Pub. Date: Jul. 16, 2015

(54) **CHARGEABLE, PORTABLE STORAGE CASE FOR OPTICAL AND OTHER WEARABLE COMPUTING DEVICES**

(71) Applicants: **JEFFREY S. MARKS**, NEWPORT COAST, CA (US); **BENJAMIN S. MARKS**, NEWPORT COAST, CA (US)

(72) Inventors: **JEFFREY S. MARKS**, NEWPORT COAST, CA (US); **BENJAMIN S. MARKS**, NEWPORT COAST, CA (US)

(21) Appl. No.: **14/594,106**

(22) Filed: **Jan. 10, 2015**

Related U.S. Application Data

(60) Provisional application No. 61/925,667, filed on Jan. 10, 2014.

Publication Classification

(51) **Int. Cl.**

H02J 7/00 (2006.01)

H02J 7/02 (2006.01)

(52) **U.S. Cl.**

CPC ***H02J 7/0042*** (2013.01); ***H02J 7/025*** (2013.01)

(57) **ABSTRACT**

A portable case for optical and other wearable computing devices comprises a receptacle forming a storage compartment, an internal rechargeable battery, electrical components, and one or more ports. The portable case further includes a charger and a mount for a rechargeable battery. Modules providing supplementary computer storage device or RAM may be further included in the portable case as embedded components to provide the optical and other wearable computing device with additional or auxiliary electronic storage.

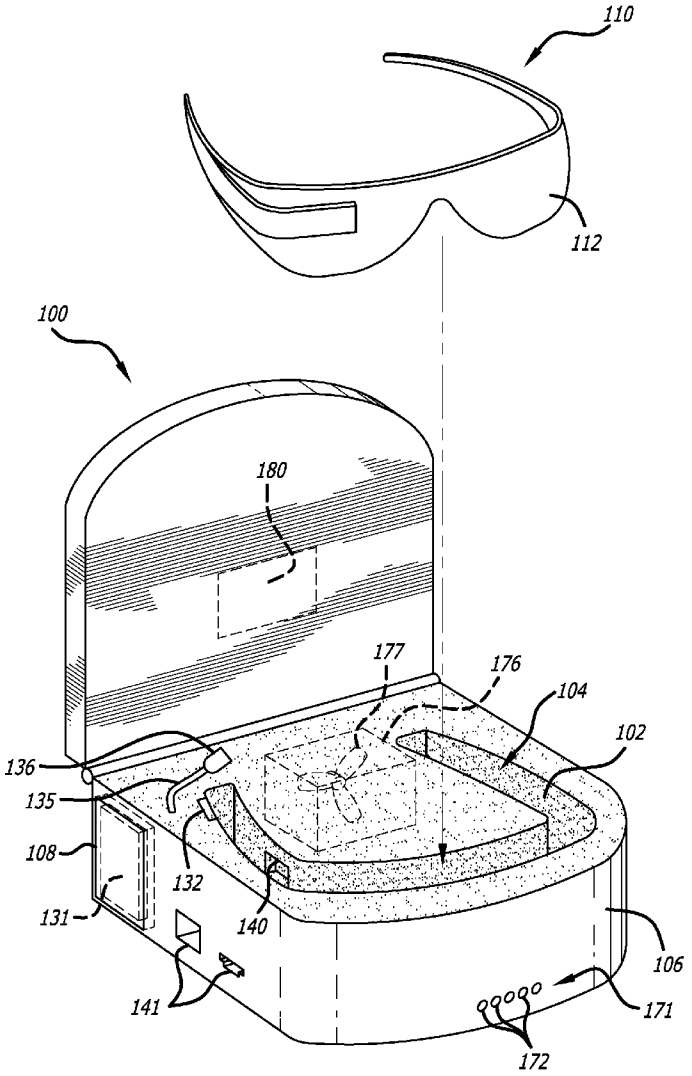

HIMPP 1021
IPR2023-01205
HIMPP v. Bragi

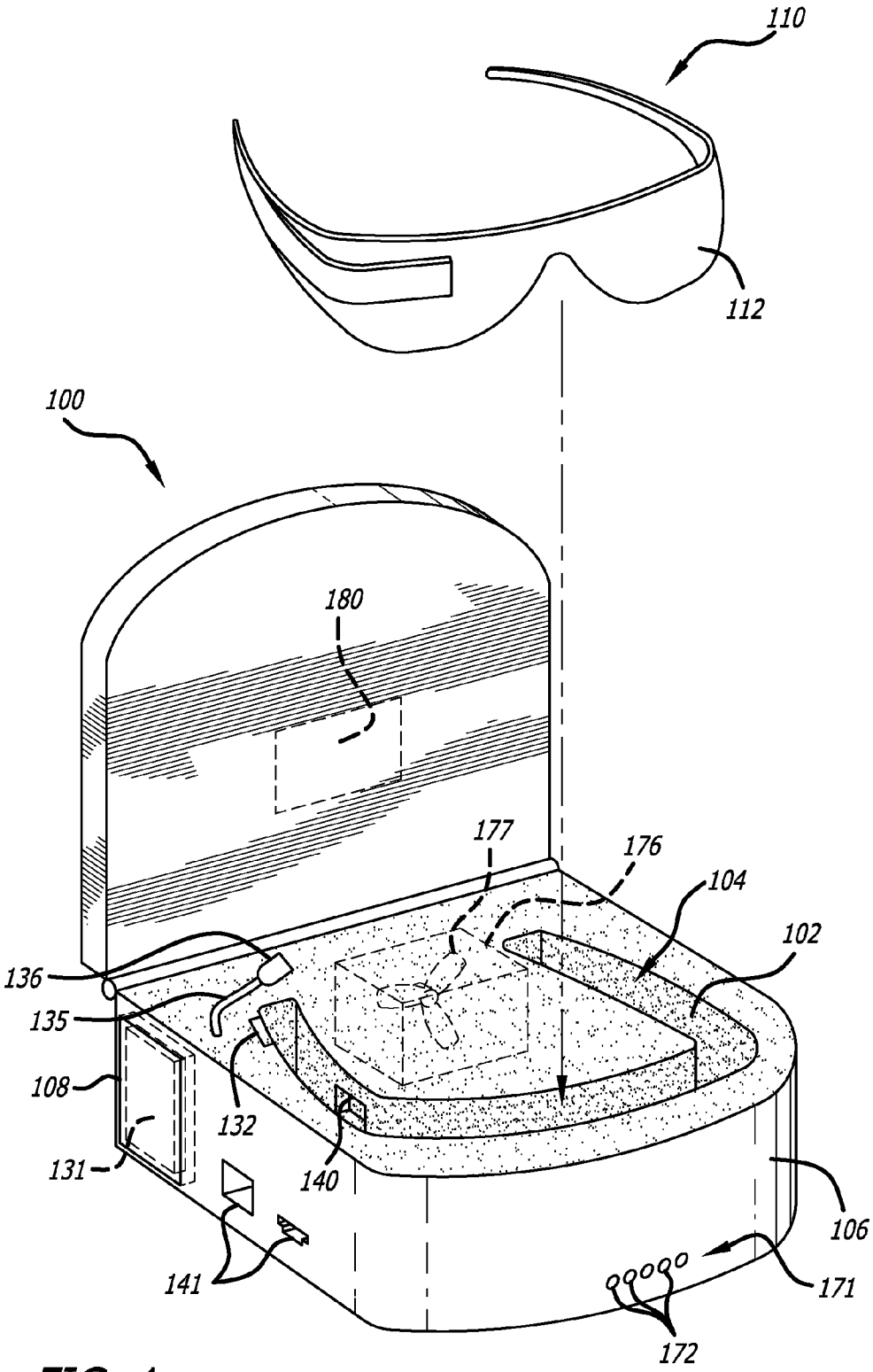
110
112
100
180
177
176
104
102
136
135
108
132
131
140
141
106
171
172

FIG. 1

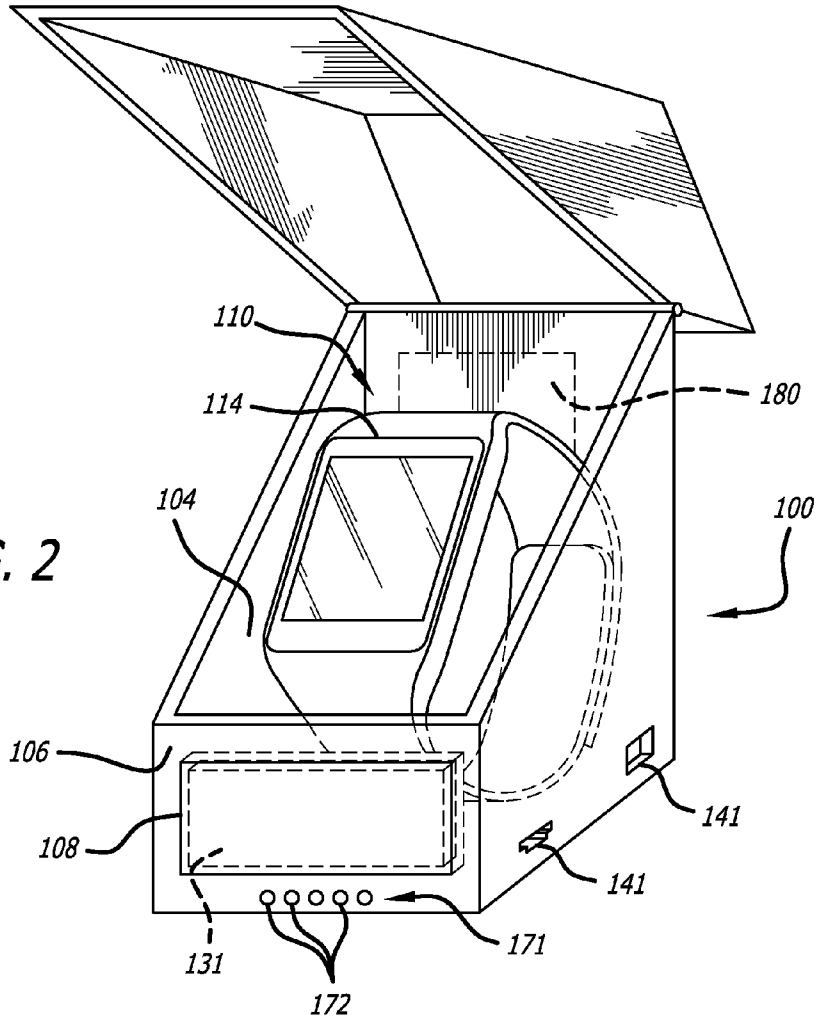

FIG. 2

CHARGEABLE, PORTABLE STORAGE CASE FOR OPTICAL AND OTHER WEARABLE COMPUTING DEVICES

CROSS-REFERENCE TO RELATED PATENT APPLICATIONS

[0001] This patent application claims priority to U.S. provisional application 61/925,667, filed on Jan. 10, 2014, the contents of which are incorporated in their entirety herein.

FIELD OF THE INVENTION

[0002] The present invention relates to wearable electronic and computing devices. Specifically, the present invention is a portable case for storing wearable electronic and computing equipment, such as optical computing devices in the form of eyewear, headgear, or other wearable items that incorporates an auxiliary battery capable of charging the wearable electronic and computing device. The auxiliary battery may itself be recharged through a port that connects to an external power source. The portable case may also incorporate additional computing storage components such as random access memory (RAM) modules.

BACKGROUND OF THE INVENTION

[0003] It is well known in the art that mobile devices such as mobile telephones and personal digital assistants (PDAs) come with an internal battery which is used to power the mobile device. However, such internal batteries are known to have a limited life. To provide additional power, for at least mobile telephones, external battery cases such as those disclosed in U.S. Pat. Nos. 8,390,255, 8,013,572 and 7,889,498, 7,638,969 and 7,612,997 provide additional battery life to the mobile device.

[0004] New technology is being developed which is incorporating computers into wearable devices such as eyeglasses and headgear. An example is Google Glass, which incorporates a computing device and small display screen into an eyeglass apparatus. Such wearable electronic devices are fragile and carry valuable personal information. It is anticipated that users will store and carry such electronic devices in portable cases. In addition, due to the size of the devices, their internal batteries have a very limited life and there is limited storage capacity.

[0005] Therefore, it is desirable to increase the battery life of electronic portable computing devices and also to protect these devices from damage when being stored and transported. It is also desirable for such portable cases to incorporate additional storage to increase their memory and computing capacity. The aforementioned prior art does not teach or disclose a case that is capable of (a) fitting and protecting wearable electronic and computing devices such as optical equipment, (b) simultaneously providing a method for recharging the batteries powering those wearable electronic and computing devices, and (c) incorporating additional storage capacity for such devices.

BRIEF SUMMARY OF THE INVENTION

[0006] Accordingly, it is an object of the present invention to provide a sturdy portable case to house and protect wearable electronic computing devices such as eyeglasses and headgear, which is also capable of recharging such devices and incorporating additional storage capacity for such devices.

[0007] An aspect of at least one of the embodiments disclosed herein includes the realization that computing power is evolving into wearable electronic and computing devices such as optical equipment, headgear, and other such computing apparatuses, that such devices may be fragile and will have limited power that must be recharged. Another aspect includes the realization that such devices will benefit from a portable carrying case which offers protection and simultaneously provides a means for recharging the batteries within such devices.

[0008] For example, the present invention may comprise a case for optical computing devices, which is molded to the contour of the device such that the device fits snugly within the case so as to protect it when not in use and during transportation. The internal portion of the case may include electrical components and a rechargeable auxiliary battery, and a port or jack which is linked to the auxiliary battery, which may receive or be plugged into a charging jack or port on the electronic device. The case may also include a rechargeable battery charger configured to recharge the auxiliary battery within the case from an outside power source which may include a wall outlet, a computer, or a secondary portable charging device. The present invention may also include at least one charging cable configured to connect the case with a power source, and at least one connector configured to connect the charging cable with the case. The case may also comprise a jack or port which can plug directly into an external computer such as a desktop, laptop, mobile computing device or other secondary computing device, and which can establish a connection between and synchronize and/or transfer data between the wearable electronic computing device and the external computer.

[0009] In accordance with another embodiment, the present invention may also incorporate external storage or RAM for the wearable electronic computing device. The case may also include a jack or port for connecting such external storage or RAM to the device.

[0010] Other embodiments, features and advantages of the present invention will become apparent from the following description of the embodiments, taken together with the accompanying drawings, which illustrate, by way of example, the principles of the invention.

BRIEF DESCRIPTION OF THE SEVERAL VIEWS OF THE DRAWINGS

[0011] The accompanying drawings, which are incorporated in and constitute a part of this specification, illustrate several embodiments of the invention and together with the description, serve to explain the principles of the invention.

[0012] FIG. **1** is a perspective view of an exemplary portable case according to the present invention; and

[0013] FIG. **2** is a perspective view of an exemplary portable case according to one embodiment of the present invention.

DETAILED DESCRIPTION OF THE INVENTION

[0014] The instant disclosure describes several embodiments of the present invention. However, one should keep in mind several points. First, the described embodiments present what the inventor(s) believe to comprise the best mode for practicing the invention at the time this patent application was filed. Thus, one of ordinary skill in the art may recognize from the following embodiments that substantially

equivalent structures, acts or methods may be used or combined to achieve the same results in exactly the same way, or to achieve the same results in a not dissimilar way. Therefore, the following embodiments should not be interpreted as limiting the invention to the embodiments specifically described. For example, one recognizes that the systems and methods described herein can be applied to other fragile wearable electronic and computing devices which require customizable, specialized, and/or fitted cases for protection and which have rechargeable batteries, such has headgears, helmets, wristwatches, wristwatch computers, hearing aids and audio devices. In addition, one recognizes that this disclosure can be applied to different styles and configurations of cases that house such wearable electronic and computing devices. For example, differently-shaped wearable electronic optical computing devices, or other electronic headgear or similar equipment may require differently-configured or shaped cases in order to snugly house and protect the device, and the same are intended to be within the scope of this application. In addition, different electronic and computing devices may have data and power ports located in different areas on the device, and the apparatus disclosed herein should be construed to encompass locating the connectors in different locations in the receptacle within the apparatus.

[0015] Likewise, individual aspects of the present invention are provided as examples, and, accordingly, one of ordinary skill in the art may recognize from a disclosed structure or act that a substantially equivalent structure or act may be used to either achieve the same results in substantially the same way, or to achieve the same results in a not dissimilar way. For example, the present disclosure refers to battery power. This, however, may be extended to apply to other sources of rechargeable power that may be embedded into mobile devices.

[0016] Furthermore, it is recognized that as technology develops, a number of additional alternatives to achieve an aspect of the invention may arise, including, but not limited to, the methods for recharging internal batteries within mobile devices. For example, apparatuses for charging mobile devices wirelessly have been invented, and the same are intended to be covered herein. Such advances are within the scope of the present invention, and should be recognized as being functionally equivalent or structurally equivalent to the aspect shown or described herein.

[0017] In addition, a function or an act should be interpreted as incorporating all modes of doing that function or act, unless otherwise explicitly stated (for example, one recognizes that "tacking" may be done by nailing, stapling, gluing, hot gunning, riveting, etc., and so a use of the word tacking invokes stapling, gluing, etc., and all other modes of that word and similar words, such as "attaching").

[0018] FIG. **1** is a perspective view of the present invention, which is, in one embodiment, a portable case **100** within which a wearable electronic and/or computing device **110**, such as an optical computing device **112** having a head-mounted display in the form of eyewear or eyeglasses, may be housed. The portable case **100** comprises a receptacle **102** configured to receive and hold the optical computing device **112** having a main battery **120**, and charging components **130** that include an auxiliary battery **131** embedded within the portable case, and at least one electrical contact **132** within the receptacle **102**. The electrical contact **132** is operable to electrically connect the auxiliary battery **131** to the optical computing device **112** so that a charge of the auxiliary battery **131** may be applied to the main battery **120** when stored within the receptacle **102** on an inside **104** of the portable case **100**.

[0019] The present invention, as noted above, is applicable to any type of wearable electronic and/or computing device **110**. For example, the wearable electronic and/or computing device **110** may include devices having an optical head-mounted display, such as eyewear and eyeglasses **112**, and other equipment to be worn, particularly on or around the head. Other examples include helmets, audio devices, hearing aids, and devices worn around the head or upper body while playing, manipulating or actuating an electronic and/or computerized game, virtual reality system, or other device, and the like. It should be noted that the wearable and/or electronic computing device **110** may include other wearable electronic items, such as for example eyeglasses equipped with video recording equipment. It is therefore to be understood that any wearable electronics are to be including within the scope of the present invention. The present invention is also applicable to equipment that is to be worn on other parts of the body, such as a wristwatch **114**. FIG. **2** is a perspective of the portable case **100** according to such an embodiment, where a wristwatch **114** is capable of being stored therein.

[0020] In another embodiment, the present invention may be considered as a portable recharging device for housing electronic eyeglasses **112** or other wearable electronic and/or computing devices **110**. The portable recharging device is configured within a portable case **100** and comprises an auxiliary battery **131** and includes a receptacle **102** which receives and holds electronic eyeglasses **112** having a main battery **120**, and at least one electrical contact **132** within the receptacle **102** on an inside **104** of the portable case **100**. The electrical contact **132** is operable to electrically connect the auxiliary battery **131** to the eyeglasses **112** so that power from the auxiliary battery **131** may be applied to the main battery **120** of the eyeglasses **112**.

[0021] In still another embodiment, the present invention comprises a method for recharging a wearable electronic and/or computing device **110**, such as eyeglasses **112**. Such a method at least includes the steps of coupling the wearable electronic and computing device **110** to one or more ports **140** within a receptacle **102** configured to store the wearable electronic and/or computing device **110** when not in use, or when being transported, inside a portable case **100**. The receptacle **102** is further configured with a rechargeable battery **131** disposed therein for the purpose of providing power to charge a main battery **120** affixed to the wearable electronic and/or computing device **110**.

[0022] Regardless of the embodiment, the present invention may include many other elements. For example, the rechargeable, auxiliary battery **131** may be housed within in a second receptacle **108** within the portable case **100**, and therefore may be removable and replaceable. Additionally, the portable case **100** may include at least one electrical contact **132** within the receptacle that is attached to a small cable or cord **150** that can be used to connect the rechargeable, auxiliary battery **131** to the optical computing device **112** where a port **113** on the optical computing device **112** is not configured in a location that can be easily snapped into place upon insertion on the inside **104** of the portable case **100**.

[0023] The portable case **100**, the receptacle **102**, the second receptacle **108**, and other aspects of the case **100** may be molded or configured in various shapes, depths, and dimensions to accommodate the specific items to be securely held

therein. For example, the second receptacle **108** may be molded to have to the specific size, shape and dimensions of the auxiliary battery **131** to be used to charge the optical computing device **112** to be placed within the portable case **100**.

[0024] The present invention may further include an extension cable or cord **160** that lengthens the connection between the optical computing device **112** and the rechargeable auxiliary battery **131**, such that the optical computing device **112** may be used while the rechargeable, auxiliary battery **112** is charging the main battery **120**.

[0025] Charging circuitry **133** may also be included in the present invention. This charging circuitry **113** may be part of, and housed within, the charging components **130**. The charging components **134** may also include additional, external contacts **134** or means to charge the optical computing device **112**. The charging components **130** may also comprise a charging cable **135** to connect the portable case **100** with a power source. One such power source may be a computer, which is employed to convey power to the portable case **100** therefrom.

[0026] The portable case **100** may further include one or more external ports **141** configured on the outside **106**. These external ports **141** enable connection with an external power source, so that the auxiliary battery **131** may itself be recharged. Such ports **141** may be of any type that is commonly used to serve as an interface between computers or peripheral devices, such as for example (but not limited to) E-Sata, USB, IEEE 1394 interface (FireWire), serial, PS/2, etc.

[0027] The additional, external contacts **134** may, in one embodiment, include one or more metal contacts, on either the eyeglasses **112**, on the inside **104** of the portable case **100**, or both, so that the eyeglasses **112** are able to automatically contact with a connector to the auxiliary battery **131**. These one or more metal contacts provide a charge for the main battery **120** without any components needing to be actually plugged in or connected via a wire or cable to provide power for the main battery **120**.

[0028] The present invention may also include a data cable **136** configured to connect the portable case **100** with a computer and enable data to be synchronized between the computer and optical computing device **112**. The charging cable **135** and the data cable **136** may be integrated, so that both charging and data synchronization functions are performed by the same cable. The charging cable **135** and/or the data cable **136** may be connected to the computer or external power source via the external ports **141**.

[0029] The present invention may further comprise additional electronic circuitry **170** that implements a battery status feature **171**. This electronic circuitry **170** may include a plurality of light emitting diodes **172**, which are visible on an outside **106** or inside **104** (or both) of the portable case **100** to display an indication **173** of battery strength and charging status to a user. The battery status feature **171** may be configured to provide the indication **173** of battery strength of one or both of the main battery **120** and the auxiliary battery **131**.

[0030] The present invention may also incorporate different types of wireless systems. One such wireless system includes a means of wirelessly charging one or both of the main battery **120** and the rechargeable, auxiliary battery **131**, so that no cable is needed to enable the charging of one or both of the main battery **120** and rechargeable, auxiliary battery **131**. A plurality of wireless components **174** may be employed to accomplish the wireless performance of the present invention.

[0031] Another wireless system that may be included in the present invention is a means for wirelessly connecting the portable case **100** to the Internet using a Wi-Fi network **175**. In one additional embodiment, the wireless components **174** include circuitry **174** that enables the optical computing device **112** to connect with and communicate data over the Internet when stored in the portable case **100** by connecting to a Wi-Fi network **175**, so that mobile network usage charges are not incurred while latent data transfers occur when the optical computing device **112** is stored in the receptacle **102**. In another embodiment, the circuity **174** and wireless components thereof may also enable the portable case **100** of the present invention to be configured as a Wi-Fi "hotspot" (as a location that offers Internet access over a wireless local area network (WLAN)) or tethering device for the optical computing device **112** when it is not stored within the receptacle **102**.

[0032] The present invention may also include means for cooling **176** equipment within the portable case **100**, such as a fan or other heat dissipation device. Such a means for cooling **176** may be disposed within the receptacle **102** and proximate to the rechargeable, auxiliary battery **131** or charging circuitry **133** to prevent over-heating within the portable case **100**.

[0033] The present invention may also include additional computer memory modules, storage components or RAM **180** on the inside **104** of the portable case **100** to supplement the memory, storage or RAM included within or on board the optical computing device **112**. It is contemplated that the present invention may further comprise a second electrical contact **181** within the receptacle **102** that is operable to electrically connect the auxiliary memory module(s), computer storage or RAM **180** to the optical computing device **112**. An extension cord **182** that lengthens the connection between a port **113** of the optical computing device **112** and the auxiliary storage or RAM **180** within the portable case **100** may also be included, such that the optical computing device **112** may be used while the auxiliary memory, storage or RAM **180** is connected.

[0034] It should be noted that the one or more of the auxiliary memory module(s), computer storage or RAM **180** may also include cloud-based components or components resident in a distributed computing environment that the present invention wirelessly connects with, using the Wi-Fi network **175** and related components **174**, or via a mobile data network such as a 3G or 4G network. The auxiliary memory module (s), computer storage or RAM **180** may be a combination of components resident within the portable case **100** and those or which the present invention connects with wirelessly.

[0035] The rechargeable, auxiliary battery **131** may also be configured to conform in shape to at least at portion of the portable case **100**, so that the shape of the rechargeable, auxiliary battery **131** is at least partially the same as that of the portable case **100** to reduce the size of the case **100** and make it easier for users to transport, such as in a handbag, backpack or pocket. The portable case **100** may also include components that enable the case **100** to mate with a receptacle inside a car or vehicle to connect with electronic components in the vehicle to charge the rechargeable, auxiliary battery **131** or otherwise use on-board computer systems, such as those capable of connecting to the Internet. The portable case **100**

may have an external attachment means, such as a port configured on the outside **106** of the portable case **100**, for mating with a corresponding component on the vehicle to securely couple thereto.

[0036] The portable case **100** may also be configured to have the shape of a receptacle inside the car so that it fits within the receptacle and is still removable by the user for transport in a handbag, backpack, or pocket, for example. The portable case **100** may therefore be embodied as a removable part of a permanent fixture in a vehicle. It is contemplated that many other means for accomplishing a charge of the main battery **120** may be implemented with the portable case **100**, and are therefore within the scope of the present invention. Similarly, many approaches may be implemented for re-charging the auxiliary battery **131**, and are also with scope of the present invention. For example, the present invention may include one or more charging components **130** configured to convey a charge from the auxiliary battery **131** to the main battery **120** from kinetic movement of the portable case **100**, so that when the wearable electronic and/or computing device **110** is placed within the receptacle **102** and the portable case **100** experiences movement, the kinetic activity actuates a re-charge of the main battery **120**. The present invention may also be configured to re-charge the auxiliary battery **131** inside the portable case **100** kinetically, so that movement generates a recharge of the portable case **100** recharging the auxiliary battery **131**.

[0037] In another example the present invention may include charging components **130** that couple to solar panels positioned on the outside **106** of the portable case **100**. The solar panels produce current when exposed to sources of light that the charging components **130** convert to convey a charge from the auxiliary battery **131** to the main battery **120**, so that when the wearable computing device **110** is placed within the receptacle **102**, the solar panels automatically re-charge the main battery **120**. The present invention may also be configured to recharge the auxiliary battery **131** inside the portable case **100** from the solar panels, so that the portable case **100** itself is recharged when exposed to light sources.

[0038] The wireless charging components **174** of the additional circuitry **170** may be configured to accomplish wirelessly charging inductively, using an electromagnetic field to transfer a charge between the auxiliary battery **131** and the main battery **120** on the wearable electronic and computing device **110**. The wireless components **174** may be configured to form an inductive coupling between the auxiliary battery **131** and the main battery **120**, and therefore may include at least inductive coil.

[0039] The present invention may also include one or more mobile applications that are resident on mobile devices such as "smart" phones or tablets. A mobile application may be linked to the portable case **100** to provide alerts to users of wearable and electronic computing devices **110** as to how much power is left in the both the main battery **120** and the auxiliary battery **131**, as well as other alerts such as how much time remains until either the device **110** or the portable case **100** runs out of power, estimated time of day that the main battery **120** and auxiliary battery **131** will run out of power, battery health, battery temperature, CPU, RAM, and other memory usage, and the like.

[0040] Accordingly, the portable case **100** may have one or more on-board software and hardware components configured to communicate with such mobile application(s) resident of external mobile devices. For example, the portable case may be configured with software that sends data to the mobile application(s) with updates regarding how much power is left in the both the main battery **120** and the auxiliary battery **131**, as well as other alerts as discussed above.

[0041] The external port **141** on the portable case **100** may comprise an auxiliary outlet, USB port, or other means that can provide a charge to another device. This configuration enables a user to connect a mobile device, for example a mobile phone, music player, tablet, gaming headset, or any other such device, and charge that device from the portable case **100** while the user's wearable and/or electronic computing device **110** is in the receptacle **102** and also charging. Therefore this enables users to connect mobile devices to the portable case **100** and charge that device and the wearable electronic and computing device **110** simultaneously.

1. An apparatus, comprising:

(a) a receptacle within an inside area of a portable case configured to receive and store an optical computing device having a main battery;

(b) an auxiliary battery embedded within at least a portion of the receptacle; and

(c) at least one electrical contact within the receptacle, the electrical contact being operable to electrically connect the auxiliary battery to the optical computing device so that power from the auxiliary battery may be applied to re-charge the main battery when the optical computing device is stored within the receptacle.

2. The apparatus of claim **1**, wherein the optical computing device comprises eyewear having a head-mounted display.

3. The apparatus of claim **1**, further comprising a charging cable that connects the auxiliary battery to the optical computing device, wherein the electrical contact within the receptacle is attached to the charging cable so that the main battery can be charged where a charging port on the optical computing device and the electrical contact are located in different places upon insertion of the optical computing device into the portable case, and an extension cable that lengthens the connection between the optical computing device and the auxiliary battery, so that the optical electronic computing device may be used while the auxiliary battery is charging the main battery.

4. The apparatus of claim **1**, wherein the auxiliary battery is housed in a second receptacle within the portable case so that the auxiliary battery is removable from the portable case.

5. The apparatus of claim **1**, further comprising a means for charging the optical computing device from an external power source, wherein the means for charging is a charging device having a cable configured to plug into at least one of a computer and a conventional power outlet to convey charge to the optical computing device from the at least one of a computer and a conventional power outlet.

6. The apparatus of claim **1**, further comprising a data cable configured to transfer and synchronize data between a computer and optical computing device.

7. The apparatus of claim **1**, further comprising a cable configured to connect with an external computer and convey power to the optical computing device from the external computer, and transfer and synchronize data between the external computer and optical computing device.

8. The apparatus of claims **1**, further comprising a battery status mode in which a plurality of light emitting diodes display an indication of battery strength and charging status that is visible on the outside of the portable case.

9. The apparatus of claim **1**, further comprising a plurality of wireless components that wirelessly charge one or both of the main battery and the auxiliary battery.

10. The apparatus of claim **1**, further comprising an auxiliary memory component disposed within the portable case to supplement memory included in the optical computing device, and a second electrical contact within the receptacle and operable to electrically connect the auxiliary memory component to the optical computing device.

11. The apparatus of claim **1**, further comprising a heat dissipating component disposed within the receptacle.

12. The apparatus of claim **1**, wherein the optical computing device comprises headgear worn by a user while actuating an electronic game.

13. The apparatus of claim **1**, further comprising one or more modules configured to communicate data about the optical computing device to a remote mobile application.

14. The portable recharging device of claim **1**, further comprising an external port accessible from an outside of the portable case, the external port configured to charge a second device using the auxiliary battery.

15. A portable recharging device for electronic eyeglasses, comprising:

(a) an auxiliary battery disposed within a receptacle of a portable case that receives and stores electronic eyeglasses having a main battery;

(b) charging and heat dissipation circuitry configured to 1) electrically connect the auxiliary battery to the electronic eyeglasses so that a charge of the auxiliary battery is applied to the main battery while stored within the portable case, and 2) dissipate heat while the charge of the auxiliary battery is applied to the main battery while stored within the portable case; and

(c) one or more modules configured to supplement a memory storage capability of the electronic eyeglasses.

16. The portable recharging device of claim **15**, wherein the charging and heat dissipation circuitry includes a fan.

17. The portable recharging device of claim **15**, wherein the charging and heat dissipation circuitry includes means for charging the electronic eyeglasses from an external power source.

18. The portable recharging device of claim **17**, wherein the external power source is an external computer, and the means for charging is a charging device configured to convey charge to the electronic eyeglasses from the external computer via a cable coupled to the portable case at an external port on the outside of the portable case.

19. The portable recharging device of claim **15**, further comprising a data cable configured to transfer and synchronize data with the electronic eyeglasses.

20. The portable recharging device of claim **15**, further comprising an indication of battery strength and charging status comprising a plurality of light emitting diodes visible on an outside of the portable case.

21. The portable recharging device of claim **15**, wherein the charging and heat dissipation circuitry a plurality of wireless components that wirelessly charge one or both of the main battery and the auxiliary battery.

22. The portable recharging device of claim **15**, wherein the auxiliary battery is removably disposed within a second receptacle inside the portable case.

23. The portable recharging device of claim **15**, further comprising one or more additional modules configured to communicate data about the electronic eyeglasses to a remote mobile application.

24. The portable recharging device of claim **15**, further comprising an external port accessible from an outside of the portable case, the external port configured to charge a second device using the auxiliary battery.

25. An apparatus for charging a wearable electronic device, comprising:

(a) a receptacle within an inside area of a portable case configured to receive and store a wearable electronic device having a main battery;

(b) an auxiliary battery embedded within at least a portion of the receptacle; and

(c) at least one electrical contact within the receptacle, the electrical contact being operable to electrically connect the auxiliary battery to the wearable electronic device so that power from the auxiliary battery may be applied to re-charge the main battery when the wearable electronic device is stored within the receptacle.

26. The apparatus of claim **25**, wherein the wearable electronic device is a pair of electronic eyeglasses.

27. The apparatus of claim **25**, wherein the wearable electronic device is a wristwatch.

* * * * *