UNITED STATES PATENT AND TRADEMARK OFFICE

BEFORE THE PATENT TRIAL AND APPEAL BOARD

K/S HIMPP,
Petitioner,

v.

BRAGI GMBH,
Patent Owner.

IPR2023-01150
Patent 9,843,853 B2

Before LARRY J. HUME, STACEY G. WHITE, and
MICHELLE N. WORMMEESTER, *Administrative Patent Judges*.

HUME, *Administrative Patent Judge*.

DECISION
Granting Institution of *Inter Partes* Review
35 U.S.C. § 314

I. INTRODUCTION

K/S HIMPP ("Petitioner") filed a Petition (Paper 1, "Pet.") requesting *inter partes* review ("IPR") of all claims 1–21 ("the challenged claims") of U.S. Patent No. 9,843,853 B2 (Ex. 1001, "the '853 patent"). Bragi GmbH ("Patent Owner") timely filed a Preliminary Response. Paper 7 ("Prelim. Resp.").

An *inter partes* review may not be instituted unless "the information presented in the petition . . . and any response . . . shows that there is a reasonable likelihood that the petitioner would prevail with respect to at least [one] of the claims challenged in the petition." 35 U.S.C. § 314(a) (2018); *see* 37 C.F.R. § 42.4 (2023).

Having reviewed the parties' papers and the evidence of record, we determine that Petitioner has shown a reasonable likelihood it will prevail in establishing the unpatentability of at least one challenged claim. Therefore, we institute an *inter partes* review of all challenged claims 1 through 21 of the '853 patent, based on the grounds raised in the Petition.

II. BACKGROUND

A. Real Parties in Interest

Petitioner identifies itself and "HIMPP members and affiliates Demant A/S; GN Store Nord A/S; IntriCon Corporation; and Rion Co., Ltd." as real parties in interest. Pet. 3. Patent Owner identifies itself as the real party in interest. Paper 5 (Patent Owner Mandatory Notices), 2; Prelim. Resp. 1. The parties do not raise any issues about real parties in interest at this time.

B. Related Matters

The parties indicate that there are no related proceedings involving the ’853 patent. Pet. 4; Paper 5, 2. However, we note that Petitioner has filed petitions for *inter partes* review of related U.S. Patents Nos. 10,117,014 B2 (IPR2023-01204) and 10,397,688 B2 (IPR2023-01205). U.S. Patent No. 10,117,014 B2 is a continuation of the presently challenged ’853 patent and is the parent of U.S. Patent No. 10,397,688 B2. The decisions whether to institute *inter partes* review in IPR2023-01204 and IPR2023-01205 will be addressed separately.

C. The ’853 Patent (Exhibit 1001)

The ’853 patent is titled “Power Control for Battery Powered Personal Area Network Device System and Method.” Ex. 1001, code (54). The ’853 patent issued December 12, 2017 from U.S. Patent Application No. 15/245,031, filed August 23, 2016, which claims the benefit of the filing date of Provisional Application No. 62/211,767, filed on August 29, 2015. *Id.* at codes (21), (22), (45), (60).

The ’853 patent describes a system and method for managing wireless earpieces in which the circuitry of the wireless earpieces is powered using a high-power mode when a magnetic field is not applied to one or more of the wireless earpieces, and is powered using a low power mode when a magnetic field is applied to one or more of the wireless earpieces. *See* Ex. 1001, at code(57). “During the low power mode, the wireless earpieces [] may synchronize data with the memory [] of the smart[] case []” and “may perform maintenance of a real-time clock and maintain other essential onboard software programs.” *Id.* at 8:4–9. In a “lowest power mode,”

"minimal required functions may be performed" such as "software updates, data synchronization, clock updates, etc.)." *Id.* at 8:12–16.

Figure 1 of the '853 patent is reproduced below as a further aid in understanding the claimed invention.

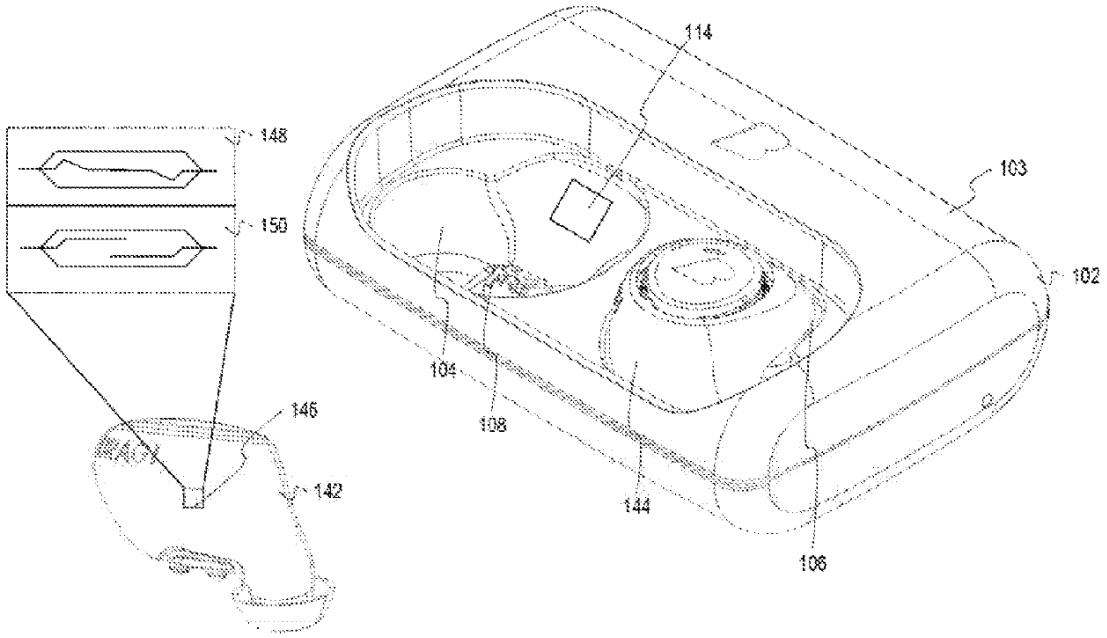

'853 Patent – Fig. 1

Figure 1 of the '853 patent "is a pictorial representation of a smart case and wireless earpieces in accordance with an illustrative embodiment." Ex. 1001, 2:19–21. Figure 1 depicts "a smart case 102 and wireless earpieces 142, 144" in which the smart case is "an open or enclosed case for securing, charging, and managing the wireless earpieces 142, 144" in receptacles (104, 106) configured to receive the wireless earpieces. *Id.* at 2:63–3:1, 3:49–54. The smart case has a logic engine that controls its operation and functionality and may include hardware, software, firmware, or any combination thereof, such as circuitry, chips, programs, scripts, instructions, and processors. *Id.* at 6:45–56. "The smart case 102 may be

utilized to store, charge, and synchronize data for the wireless earpieces 142, 144." *Id.* at 3:21–24.

The '853 patent explains that the smart case also encloses a battery that "may be utilized to charge the wireless earpieces 142, 144 through direct contact or wirelessly," and is used "as a custom charger for ensuring the proper power management and functionality of the wireless earpieces 142, 144." Ex. 1001, 3:25–31. According to the '853 patent, the smart case properly maintains power levels to "ensure[] that the duty cycle[s] of the wireless earpieces 142, 144 are maximized." *Id.* at 3:37–39. "For example, the smart case 102 may keep the wireless earpieces 142, 144 fully charged during a time period of inactivity, such as before being purchased (e.g., on a shelf or as part of inventory) or once purchased." *Id.* at 3:39–43.

The smart case includes hardware interfaces (108, 110) that are located within the receptacles and are used for electrically connecting the wireless earpieces to the smart case via contact points, busses, wires, magnets, or other physical connectors. Ex. 1001, 4:5–33. In a magnet-implemented embodiment,

> interfaces 108, 110 may each include a magnet [(114)] that activates the corresponding reed switch (i.e., reed switch 146 described below) to power off or initiate a low power mode (e.g., lower power state or mode) for one or both of the wireless earpieces 142, 144 when one or more of the wireless earpieces 142, 144 are placed within the receptacles 104, 106.

Id. at 4:27–33. The reed switch may be positioned anywhere on or within the wireless earpiece, and the magnet may be positioned anywhere within the smart case that allows the magnet to interact with the reed switch when the earpiece is seated in its receptacle. *Id.* at 5:48–56. "The reed switch 146 may operate in a closed mode 148 when no magnetic field is present or in an

open mode 150 when a magnetic field is present" such that "the reed switch 146 may be in the closed mode 148 when outside the smart case 102 and in the open mode 150 when in the smart case 102." *Id.* at 5:31–38; *see also id.* at 7:63–8:4. "[P]roximity to the magnet 114 and reed switch 146 may engage the reed switch 146 to the open mode 150" and charge the earpiece, and "[r]emoval of the wireless earpiece 142 disengages the reed switch 146 resulting in the wireless earpiece 142 functioning under its own power." *Id.* at 5:42–47.

Figure 5 of the '853 patent is reproduced below as a further aid in describing control of the wireless earpieces using magnets in the smart case.

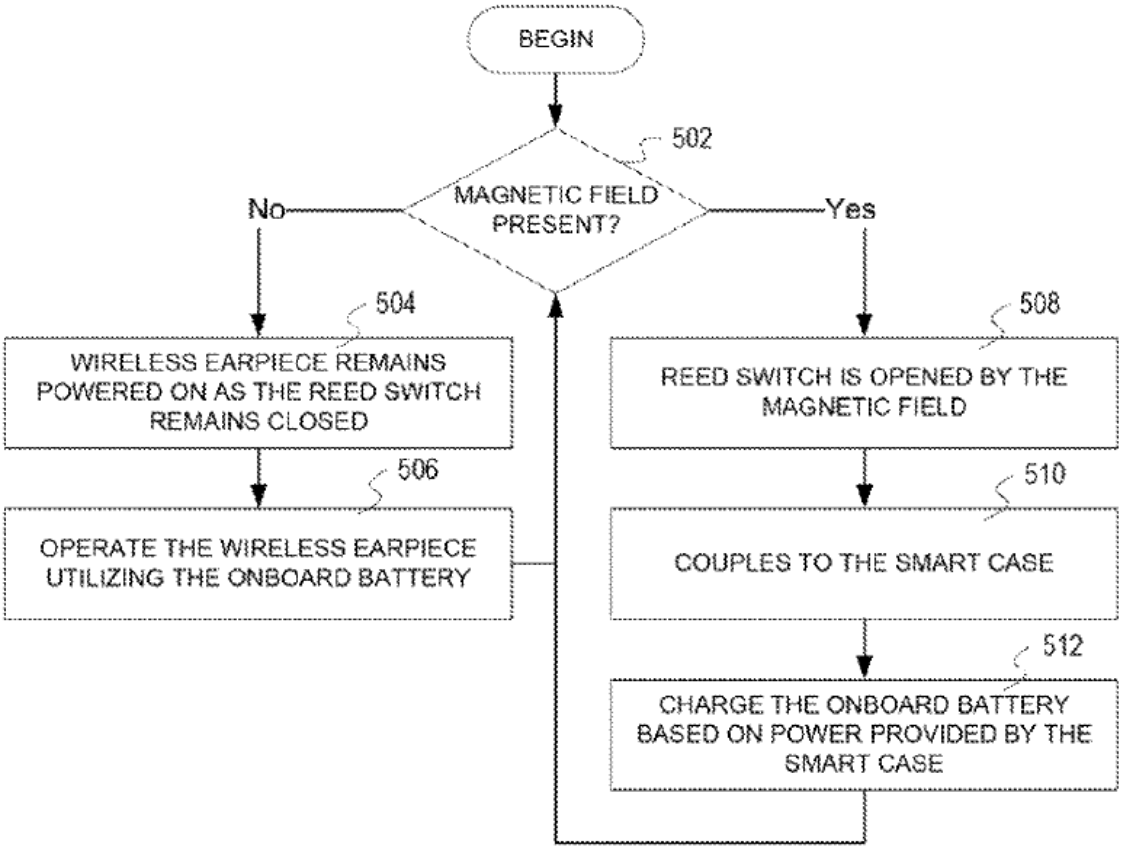

'853 Patent – Fig. 5

Figure 5 of the '853 patent "is a flowchart of a process for utilizing wireless earpieces with a smart case in accordance with an illustrative embodiment." Ex. 1001, 2:28–30. The process shown in Figure 5 begins when the wireless earpiece determines whether a magnetic field is present (502) based on the interaction of a magnet or magnetic field with a reed switch in the wireless earpiece. *Id.* at 8:32–40. "If the magnetic field is not present, the wireless earpiece remains powered on as the reed switch remains closed (step 504)" and "the onboard battery of the wireless earpiece powers and operates the wireless earpiece to ensure full functionality" (506). *Id.* at 8:41–45, 8:52–56.

If the magnetic field is present, "the reed switch is opened by the magnetic field (step 508) . . . automatically based on its nature and configuration when the magnetic field is present" and the wireless earpiece couples to the smart case (510). Ex. 1001, 8:63–65, 9:15–27. When the reed switch is opened, "the wireless earpiece may move to a low power mode in order to preserve battery life," or "may alternatively enter a reduced power mode, sleep, or other mode." *Id.* at 8:65–9:5. "The wireless earpiece may also send a command or communication to the second wireless earpiece to change power mode or otherwise act in response to the reed switch being opened." *Id.* at 9:5–8. While the wireless earpiece and the smart case are coupled, the smart case provides power to the wireless earpiece to charge its onboard battery (512), and the wireless earpiece may download or synchronize data with the smart case. *Id.* at 9:41–47, 9:60–62. "The wireless earpiece may determine whether a charge is required for the wireless earpiece. . . . If a[] charge is not required, the wireless earpiece does not receive power from the smart case." *Id.* at 9:41–47.

Patent Owner asserts the '853 patent addresses deficiencies in poor battery life and the inability to conserve battery life of wearable devices by switching battery usage modes to improve battery longevity and by allowing interaction with a so-called "smart case" with a rechargeable battery. The '853 patent is indicated as having particular relevance in the wireless earbud market. Prelim. Resp. 4–5 (citing Ex. 1001, 1:19–32).

D. The Challenged Claims

Of the challenged claims, claims 1, 10, and 21 are independent, and for purposes of this Decision, claims 1, 10, and 21 are illustrative of the challenged claims and are reproduced below (with formatting added for clarity and with bracketed alphanumeric identification added by Petitioner for ease of reference):

Claim 1 recites:[1]

> [1Preamble] A method for managing wireless earpieces, comprising:
>
> > [1A] powering circuitry of the wireless earpieces utilizing a high power mode in response to detecting a magnetic field is not applied to one or more of the wireless earpieces; and
> >
> > [1B] altering the power sent to the circuitry of the wireless earpieces to a low power mode in response to detecting a magnetic field is applied to one or more of the wireless earpieces.

[1] Patent Owner filed a Request for a Certificate of Correction on February 14, 2018 to correct a typographical error by replacing the word "poser" with the word "power" in line 3 of claim 1. The Office issued a Certificate of Correction correcting the typographical error on March 13, 2018.

Ex. 1001, 10:55–63 (Petitioner's labeling added within brackets for ease of reference); *see* Pet. (Specific Grounds of Unpatentability), 23–29.

Claim 10 recites:

> [10Preamble] A wireless earpiece, comprising:
>
> [10A] circuitry operating the wireless earpiece;
>
> [10B] a battery powering the circuitry of the wireless earpiece; and
>
> [10C] a reed switch connecting the battery to the circuitry, wherein the reed switch connects the circuitry to the battery when a magnetic field is not detected, and wherein the reed switch disconnects the circuitry from the battery when a magnetic field is detected.

Ex. 1001, 11:23–31 (Petitioner's labeling added within brackets for ease of reference); *see* Pet. (Specific Grounds of Unpatentability), 18–22.

Claim 21 recites:

> [21Preamble] A system comprising:
>
> [21A] a first wireless earpiece, comprising:
>
> [21B] circuitry operating the first wireless earpiece;
>
> [21C] a battery powering the circuitry of the first wireless earpiece; and
>
> [21D] a switch connecting the battery to the circuitry, wherein the switch connects the circuitry to the battery when a magnetic field is not detected, and wherein the switch disconnects the circuitry from the battery when a magnetic field is detected;
>
> [21E] a smart case for charging the first wireless earpiece and a second wireless earpiece, the smart case comprising:
>
> [21F] a smart case housing;

> [21G] a first receptacle for receiving the first wireless earpiece disposed within the smart case housing;
>
> [21H] a second receptacle for receiving the second wireless earpiece disposed within the smart case housing;
>
> [21I] a first interface associated with the first receptacle for electrically connecting the smart case to the first earpiece;
>
> [21J] a second interface associated with the second receptacle for electrically connecting the smart case to the second earpiece;
>
> [21K] an intelligent control disposed within the smart case housing and operatively connected to the first interface and the second interface.

Ex. 1001, 12:23–51 (Petitioner's labeling added within brackets for ease of reference); *see* Pet. (Specific Grounds of Unpatentability), 35–42.

E. Asserted Challenges to Patentability

Petitioner asserts challenges 1 through 7 of unpatentability as shown in Table II.E, below. Pet. 6–7, 17–92.

Table II.E

Ground	Claim(s) Challenged	35 U.S.C. §	Reference(s)/Basis
1	10, 14	102(a)	Brown[2]
2	1–3, 5	102(a)	Hain[3]

[2] GB 1254017, filed Mar. 25, 1969, published Nov. 17, 1971. Ex. 1007, "Brown".

[3] DE 10 2007 039 455 A1, filed Aug. 21, 2007, published Feb. 26, 2009. Ex. 1004, "Hain".

Ground	Claim(s) Challenged	35 U.S.C. §	Reference(s)/Basis
3	10, 21	102(a)	Steinbrecher[4]
4	1–7, 9	103	Shaffer[5] and Hain
5	4, 6–8	103	Shaffer, Hain, and Sørensen[6]
6	10–12, 14, 16–21	103	Shaffer and Steinbrecher
7	11–13, 15, 17–21	103	Shaffer, Steinbrecher, and Sørensen

Pet. 6–7.

Petitioner asserts Shaffer and Sørensen qualify as prior art under 35 U.S.C. §§ 102(a)(1) and (2), and Brown, Hain, and Steinbrecher qualify as prior art under 35 U.S.C. § 102(a)(1). Pet. 5–6, 15; *see* 35 U.S.C. § 102(a) (2012).

At this stage of the proceeding, Patent Owner does not dispute that each reference qualifies as prior art. *See, e.g.*, Prelim. Resp. 11–16.

[4] EP 1 727 395 B1, filed Feb. 8, 2006, published Aug. 20, 2008. Ex. 1006, "Steinbrecher".

[5] US 2015/0245126 A1, filed Oct. 9, 2014, published Aug. 27, 2015. Ex. 1003, "Shaffer".

[6] US 8,265,315 B2, filed Oct. 12, 2009, issued Sep. 11, 2012. Ex. 1005, "Sørensen".

F. Testimonial Evidence

Petitioner supports its challenge with a declaration from Sayfe Kiaei, Ph.D. Ex. 1002, "Kiaei Declaration."

At this stage of the proceeding, Patent Owner does not rely on any declarant testimony, and does not offer any challenge to the qualifications of Dr. Kiaei. *See generally* Prelim. Resp.

III. ANALYSIS

A. Discretionary Denial under 35 U.S.C. § 325(d)

Citing *Advanced Bionics*,[7] Patent Owner argues we should exercise discretion under § 325(d) and deny institution under 35 U.S.C. § 103 because the Shaffer reference (*see* n.5, *supra*) was considered during examination. Prelim. Resp. 23–27. Petitioner opposes. Pet. 11–13. For the reasons discussed below, we do not invoke our discretion to deny institution under § 325(d).

1. Principles of Law

Under § 325(d), in determining whether to institute an *inter partes* review, "the Director may take into account whether, and reject the petition or request because, the same or substantially the same prior art or arguments previously were presented to the Office."[8] Our § 325(d) analysis employs a two-prong framework: (1) whether the prior art and arguments presented in the petition are the same or substantially the same as those previously

---

[7] *Advanced Bionics, LLC v. MED-EL Elektromedizinische Geräete GmbH*, IPR2019-01469, Paper 6 at 7 (PTAB Feb. 13, 2020)(precedential).

[8] The Board institutes trial on behalf of the Director. 37 C.F.R. § 42.4(a).

presented to the Office; and (2) if so, whether the petitioner has demonstrated a material error by the Office in its prior consideration of those prior art and arguments. *Advanced Bionics,* 8.

We consider several non-exclusive factors as set forth in *Becton, Dickinson & Co. v. B. Braun Melsungen AG*, IPR2017-01586, Paper 8 (Dec. 15, 2017) (precedential as to § III.C.5, first paragraph) ("*Becton, Dickinson*"), which "provide useful insight into how to apply the framework" under § 325(d). *Advanced Bionics*, 9. These non-exclusive factors include:

> (a) the similarities and material differences between the asserted art and the prior art involved during examination;
>
> (b) the cumulative nature of the asserted art and the prior art evaluated during examination;
>
> (c) the extent to which the asserted art was evaluated during examination, including whether the prior art was the basis for rejection;
>
> (d) the extent of the overlap between the arguments made during examination and the manner in which Petitioner relies on the prior art or Patent Owner distinguishes the prior art;
>
> (e) whether Petitioner has pointed out sufficiently how the Examiner erred in its evaluation of the asserted prior art; and
>
> (f) the extent to which additional evidence and facts presented in the Petition warrant reconsideration of the prior art or arguments.

Becton, Dickinson, 17–18 (formatting added). "If, after review of factors (a), (b), and (d), it is determined that the same or substantially the same art or arguments previously were presented to the Office, then factors (c), (e), and (f) relate to whether the petitioner has demonstrated a material error by the Office." *Advanced Bionics*, 10.

2. *Whether the Prior Art and Arguments are the Same or Substantially the Same*

Patent Owner argues "Petitioners did not address the *Advanced Bionics* framework" (Prelim. Resp. 25 (citing Pet. 11–13)) and "Petitioners (1) rely on prior art reference previously considered by the Examiner and (2) Petitioners made no attempt to shown a material error in the prosecution of the patent with respect to the Examiner's consideration of the same prior art that Petitioners rely on in the Petition. Thus, discretionary denial is appropriate." Prelim. Resp. 25.[9]

Specifically, Patent Owner argues that Shaffer was presented to the Office and considered by the Examiner and "[a]s a result, the first part of the *Advanced Bionics* framework is satisfied." *Id.* Patent Owner further contends Petitioner has not met their burden of showing material error in the examination of the '853 patent." *Id.* at 26–27. "Petitioners have not even attempted to show material error, and as a result, Shaffer should not be considered prior art. As a result, Grounds 4–7 must fail." *Id.* at 27.

Petitioner acknowledges that several new references, including Shaffer, were cited by the Examiner on a form PTO-892[10] during prosecution, but "the examiner's stated reasons for allowance do not mention any of the new references," instead, "the examiner's statements simply mirror an earlier-issued International Written Opinion, which did not cite Shaffer." Pet. 11.

---

[9] We disagree with Patent Owner's assertion that Petitioner did not adequately address the *Advanced Bionics* framework. *See* Pet. 11–13.

[10] Notice of References Cited.

In light of the argument and evidence before us, we find that Shaffer was previously presented to the Office and as such, the first prong of the *Advanced Bionics* test is satisfied.

3. Whether Petitioner has Demonstrated Material Error

We next analyze whether Petitioner has demonstrated a material error by the Office under the second prong of *Advanced Bionics*.

"Although Shaffer was cited by the examiner during prosecution, it was not discussed in any meaningful regard on the record, as explained above." Pet. 11. Petitioner cites *Advanced Bionics*' holding that, "[i]f the record of the Office's previous consideration of the art is not well-developed or silent, then a petitioner may show the Office erred by overlooking something persuasive." *Id.* (citing *Advanced Bionics*, 10). Petitioner specifically asserts the Examiner erred because

> Shaffer discloses the precise features that the examiner identified as novel (high-power and low-power modes), which, in combination with the art teaching other known features (e.g., a reed switch), demonstrates that the challenged claims are unpatentable. . . . By overlooking the specific teachings of Shaffer in allowing the challenged claims, the examiner committed a material error even if it could be argued that Shaffer was considered.

Pet. 12 (internal citations omitted). *See Advanced Bionics*, 8 n.9 ("An example of a material error may include misapprehending or overlooking specific teachings of the relevant prior art where those teachings impact patentability of the challenged claims.").

We find that Petitioner has demonstrated a material error by the Office in the prior consideration of Shaffer. Under the second prong of *Advanced Bionics*, we consider "the extent to which the asserted art was

evaluated during examination, including whether the prior art was the basis for rejection." *Becton, Dickinson*, 17. Here, we agree with Petitioner that, although Shaffer was cited by the Examiner on a form PTO-892, Shaffer was not applied as a prior art reference in any rejection because claims 1–20 in the application leading to the '895 patent were allowed in a first action allowance and then, after filing a Request for Continued Examination (RCE), claim 21 was added, and subsequently claims 1–21 were allowed and issued in the '853 patent with no further discussion of Shaffer or any other reference. *See, generally* Ex. 1008; *and see* Pet. 10.

4. Conclusion as to Discretionary Denial

For the foregoing reasons, we decline to exercise discretion to deny institution under § 325(d).

B. Legal Standards

"In an [*inter partes* review], the petitioner has the burden from the onset to show with particularity why the patent it challenges is unpatentable." *Harmonic Inc. v. Avid Tech., Inc.*, 815 F.3d 1356, 1363 (Fed. Cir. 2016) (citing 35 U.S.C. § 312(a)(3) (requiring *inter partes* review petitions to identify "with particularity . . . the evidence that supports the grounds for the challenge to each claim")). This burden of persuasion never shifts to the patent owner. *Dynamic Drinkware, LLC v. Nat'l Graphics, Inc.*, 800 F.3d 1375, 1378 (Fed. Cir. 2015).

1. Anticipation

"A single prior art reference that discloses, either expressly or inherently, each limitation of a claim invalidates that claim by anticipation." *Perricone v. Medicis Pharm. Corp.*, 432 F.3d 1368, 1375–76 (Fed.

Cir. 2005). To establish anticipation, each and every element in a claim, arranged as recited in the claim, must be found in a single prior art reference. *Net MoneyIN, Inc. v. VeriSign, Inc.*, 545 F.3d 1359, 1369 (Fed. Cir. 2008); *Karsten Mfg. Corp. v. Cleveland Golf Co.*, 242 F.3d 1376, 1383 (Fed. Cir. 2001).

Furthermore, a "reference must describe the claimed invention with sufficient precision and detail to establish that the subject matter existed in the prior art." *Verve, LLC v. Crane Cams, Inc.*, 311 F.3d 1116, 1120 (Fed. Cir. 2002). The reference does not need to use the same terminology. *Kennametal, Inc. v. Ingersoll Cutting Tool Co.*, 780 F.3d 1376, 1381 (Fed. Cir. 2015) (noting that a reference anticipates if a person of skill in the art "would at once envisage the claimed arrangement or combination" (internal quotation marks and citation omitted)). But, an ambiguous reference will not anticipate a claim. *Wasica Fin. GmbH v. Cont'l Auto. Sys., Inc.*, 853 F.3d 1272, 1284 (Fed. Cir. 2017). The dispositive question for anticipation is whether one skilled in the art would reasonably understand or infer from the reference that every claim element is disclosed. *Eli Lilly & Co. v. L.A. Biomed. Research Inst. at Harbor-UCLA Med. Ctr.*, 849 F.3d 1073, 1074–75 (Fed. Cir. 2017).

We analyze the anticipation challenge according to these principles.

2. Obviousness

The legal question of obviousness is resolved on the basis of underlying factual determinations including (1) the scope and content of the prior art; (2) any differences between the claimed subject matter and the prior art; (3) the level of ordinary skill in the art; and (4) when in evidence,

objective evidence of nonobviousness.[11] *Graham v. John Deere Co.*, 383 U.S. 1, 17–18 (1966). One seeking to establish obviousness based on more than one reference also must articulate sufficient reasoning with rational underpinnings to combine teachings. *See KSR Int'l Co. v. Teleflex Inc.*, 550 U.S. 398, 418 (2007).

We analyze the obviousness challenges according to these principles.

C. Level of Ordinary Skill in the Art

Factors pertinent to determining the level of ordinary skill in the art include (1) the educational level of the inventor; (2) the type of problems encountered in the art; (3) prior-art solutions to those problems; (4) the rapidity with which innovations are made; (5) the sophistication of the technology; and (6) the educational level of workers active in the field. *Envtl. Designs, Ltd. v. Union Oil Co.*, 713 F.2d 693, 696–97 (Fed. Cir. 1983). Not all factors may exist in every case, and one or more of these or other factors may predominate in a particular case. *Id.* These factors are not exhaustive, but merely a guide to determining the level of ordinary skill in the art. *Daiichi Sankyo Co. v. Apotex, Inc.*, 501 F.3d 1254, 1256 (Fed. Cir. 2007). Moreover, the prior art itself may reflect an appropriate skill level. *Okajima v. Bourdeau*, 261 F.3d 1350, 1355 (Fed. Cir. 2001).

Supported by the testimony of Dr. Kiaei, Petitioner asserts the level of ordinary skill in the art corresponds to a person having "a bachelor's degree in Electrical Engineering, or equivalent experience, and one to two years of experience in the field of wireless electronic devices and battery systems,

---

[11] The current record does not include evidence of objective indicia of nonobviousness (secondary considerations). *See generally* Pet., Ex. 1002, and Prelim. Resp.

particularly wireless earpieces such as wireless headphones and hearing aids." Pet. 17 (citing Ex. 1002 ¶ 25).

At this stage, Patent Owner "applies Petitioner's definition of a [person of ordinary skill in the art] POSITA" (Prelim. Resp. 16 (citing Pet. 17), but "reserves the right to present issues relating to the level of a POSITA should the Board institute this IPR." Prelim. Resp. 16.

Based on the current record, and for purposes of this Decision, we preliminarily adopt Petitioner's position as to the level of ordinary skill in the art at the time of the claimed invention, as articulated above. On this record, we are satisfied that Petitioner's proposed definition generally comports with the level of skill necessary to understand and implement the teachings of the '853 patent and the asserted prior art. This definition also is supported by the testimony of Dr. Kiaei. *See* Ex. 1002 ¶ 25.

To the extent that the level of ordinary skill in the art should become an issue at trial, we invite the parties' further briefing on this matter as permitted under our rules.

D. Claim Construction

In an *inter partes* review, we apply the same claim construction standard that would be used in a civil action under 35 U.S.C. § 282(b), following the standard articulated in *Phillips v. AWH Corp.*, 415 F.3d 1303 (Fed. Cir. 2005) (en banc). 37 C.F.R. § 42.100(b). In applying such standard, claim terms are generally given their ordinary and customary meaning, as would be understood by a person of ordinary skill in the art, at the time of the invention and in the context of the entire patent disclosure. *Phillips*, 415 F.3d at 1312–13. "In determining the meaning of the disputed claim limitation, we look principally to the intrinsic evidence of record,

examining the claim language itself, the written description, and the prosecution history, if in evidence." *DePuy Spine, Inc. v. Medtronic Sofamor Danek, Inc.*, 469 F.3d 1005, 1014 (Fed. Cir. 2006) (citing *Phillips*, 415 F.3d at 1312–17).

At this stage, "Petitioner submits that no terms need to be construed to resolve the issues raised in th[e] Petition because the prior art discloses all limitations under any plausible construction." Pet. 13.

However, Patent Owner responds that construction of the terms "smart case" and "earpiece[s]" is necessary to resolve the current controversy. Prelim. Resp. 17–18. Patent Owner asserts the term "smart case" as used in "[c]laims 4, 6–8, 11–13, 17–21 of the '853 Patent should be construed as 'a case comprising a rechargeable battery capable of being utilized to charge a wireless earpiece.'" Prelim. Resp. 17 (citing Ex. 1001, 3:25–28, 31–34; 6:11–16, 28–29). Patent Owner further asserts "'[e]arpiece[s]' as used in all Challenged Claims should be construed as 'an earpiece/earpieces configured to fit into a user's ears.'" *Id.* at 18.

1. "smart case"

With respect to the phrase "smart case," recited in claims 4, 6, 8, 11–13, and 17–21, we disagree with Patent Owner's narrow construction requiring that the smart case be construed as including a rechargeable battery utilized to charge a wireless device, because such a construction ignores intrinsic evidence of multiple additional configurations, actions, or functionality of the smart case disclosed in the '853 patent. These functions, other than charging a wireless device, include preserving battery life of the wireless earpieces, communication with the wireless earpieces through physical interactions or wireless connections, standards, or protocols,

providing a magnetic field, and arrangements in which the smart case is configured to store data. *See* Ex. 1001, 2:38–57.[12]

More importantly, we note the disclosure of only an illustrative embodiment in the '853 patent that includes a presumably rechargeable battery, i.e., "[t]he smart case **102** encloses a battery, and various other circuitry (not shown). . . . For example, the battery of the smart case **102** may be utilized to charge the wireless earpieces **142**, **144** any number of times before the smart case **102** and corresponding battery may require charging." Ex. 1001, 3:25–34.

However, as quoted below, we note the '853 patent also discloses alternative embodiments of the smart case that do not require a rechargeable battery to recharge a wireless device:

> The smart case 402 may have any number of configurations and include various circuitry, connections, and other components. *The smart case 402 is one potential embodiment of the smart case 102 of FIGS. 1–3*.
>
> In one embodiment, the smart case 402 may include a battery 404, a logic engine 406, a memory 408, interfaces 410, 411, a transceiver 412, and a magnet 414. The battery 404 is a power storage device configured to charge the power storage system of the wireless earpieces 401 once or multiple times. *In other embodiments, the battery 404 as well as the batteries of the wireless earpieces 401 may represent a fuel cell, thermal electric generator, piezo electric charger, solar charger, ultra-capacitor, or other existing or developing power storage technologies*.

Ex. 1001, 6:7–20 (bold element numbering omitted, italics added).

---

[12] We note that none of the claims indicated above explicitly require that the recited "smart case" contain a rechargeable battery therein. *See* Ex. 1001, 10:55–12:51.

Accordingly, at this stage of the proceeding, in connection with claims 4, 6–8, 11–13, and 17–21, we decline to adopt Patent Owner's proffered claim construction of the phrase "smart case" that requires a rechargeable battery utilized to recharge a wireless device. No further express construction is required for the purposes of this Decision.

2. "earpiece[s]"

With respect to Patent Owner's proposed construction of the term "earpiece[s]" as used in all challenged claims 1–21, we disagree with Patent Owner's construction that limits the construction only to earpieces "configured to fit *into* a user's ears."[13] We note a relevant dictionary definition of "earpiece" is: "**1**. A part, as of a telephone receiver, that fits in or is held next to the ear. **2**. See **earphone**." *Earpiece*, THE AMERICAN HERITAGE DICTIONARY, 266 (3d ed. 1994); *and see id*. "Earphone" ("A device that converts electric signals to audible sound and fits over or in the ear."). [14]

Notwithstanding the dictionary definition cited above, and lacking explicit definition of the term in the claims themselves, we note the '853 patent discloses an exemplary embodiment in which the earpieces are inserted *into* a user's ears, i.e., "*[i]n one embodiment*, the wireless earpieces 142, 144 include a set of left and right ear pieces configured to fit into a user's ears." Ex. 1001, 3:5–7.

---

[13] Based on the record currently before us, we find nothing recited in any of claims 1–21 of the '853 patent that explicitly defines the recited earpiece, or supports Patent Owner's proffered construction of the term "earpiece[s]."

[14] The cited dictionary definitions are being made of record as Board Ex. 3001 contemporaneously with this Decision.

We further note additional embodiments in the '853 patent disclose that wireless earpieces 142 and 144 have completely different configurations than that proffered by Patent Owner. For example:

> *In another embodiment, the wireless earpieces 142, 144 may represent wireless devices that may be ingested or implanted into a user*. For example, the smart case 102 may be configured to work with an endoscopic pill, pacemaker, tracking device, contact lenses, oral implants, bone implants, artificial organs, or so forth. The smart case 102 may act as a logging tool for receiving information, data, or measurements made by the wireless devices. For example, the smart case 102 may be attached to a belt or worn by the user to download data from the wireless device(s) in real-time. As a result, the smart case 102 may be utilized to store, charge, and synchronize data for the wireless earpieces 142, 144 in any number of embodiments.

Ex. 1001, 3:12–24 (bold element numbering omitted, italics added).

Accordingly, at this stage of the proceeding, lacking explicit definition in all challenged claims, we decline to adopt Patent Owner's proffered construction of the term "earpiece[s]" that requires insertion into the ears. No further express construction is required for the purposes of this Decision.

3. "one or more" wireless earpieces

Although Patent Owner does not discuss construction of the phrase "one or more" in the claim construction portion of the Preliminary Response, i.e., whether the phrase requires a singular or plural connotation, we note a potential issue as to how this phrase should be interpreted with respect to Ground 2, anticipation of claim 1 by Hain.

We address this potential claim construction issue in our analysis of Ground 2 in Section III.G.1.c) of this Decision, *infra*.

4. Summary

At this stage of the proceeding, based on the parties' stated positions, and our disagreement with Patent Owner's proposed claim construction of the above-identified terms, we defer these claim construction issues until after further briefing by the parties on these issues.

Moreover, we do not find it necessary to address the construction of any other claim terms or phrases to decide whether Petitioner satisfies the "reasonable likelihood" standard for instituting trial. *See Nidec Motor Corp. v. Zhongshan Broad Ocean Motor Co.*, 868 F.3d 1013, 1017 (Fed. Cir. 2017) (noting that "we need only construe terms 'that are in controversy, and only to the extent necessary to resolve the controversy'" (quoting *Vivid Techs., Inc. v. Am. Sci. & Eng'g, Inc.*, 200 F.3d 795, 803 (Fed. Cir. 1999))).

We further note our findings and conclusions in this Decision are preliminary, and do not preclude the parties from arguing proposed constructions of the claims during trial. Indeed, the parties are hereby given notice that claim construction, in general, is an issue to be addressed at trial. Claim construction will be determined at the close of all the evidence and after any hearing. The parties are expected to assert all their claim construction arguments and evidence in their respective briefing as permitted by our rules.

E. Summary of Asserted Prior Art References

1. Brown (Ex. 1007)

Brown is Patent No. GB 1254017 titled "Improvements in Hearing Aids," filed on March 25, 1969, and published on November 17, 1971. Ex. 1007, codes (11), (22), (45), (54). Brown describes "miniature hearing

aids such as are worn in the ear, on the ear, or otherwise supported at ear level." *Id.* at 1:9–11.

Generally, Brown is directed to

> a hearing aid comprising an amplifier, a primary or secondary cell for energising the amplifier, and a switch controlling the flow of current from the cell to the amplifier, the switch being a reed delay switch enclosed within the casing of the hearing aid and disposed for being rendered open circuit by a magnet outside the casing.

Id. at 1:19–27. Brown explains that the "magnetic reed relay switch can be used as a means of doing away with the troublesome, conventional mechanical switch, by mounting a permanent magnet movably on the aid to act as a manually operable control for a reed relay switch." *Id.* at 1:28–33. Brown's hearing aid is recharged when the user places the aid in its receptacle. *Id.* at 1:65–66. "The reed relay switch can be arranged automatically to disconnect the amplifying circuits from the cell when the aid is removed from the head and placed in its receptacle," such that the switch is "opened by a permanent magnet or coil fixed in the receptacle in a suitable position, when the aid is placed in the receptacle." *Id.* at 1:36–43; *see also id.* at 1:66–68.

Brown's Figure 1 is reproduced below.

FIG. 1

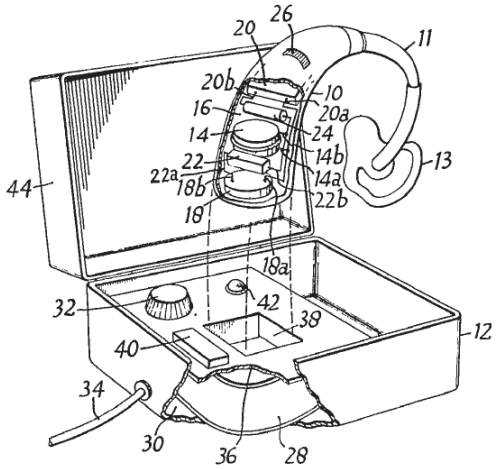

Brown's Figure 1 is "a partially broken away perspective view of a hearing aid and its case." Ex. 1007, 1:84–85. "In Fig. 1 there is shown a miniature hearing aid 10, and a receptacle or case 12 for storing the hearing aid 10 when the aid is not in use. The case 12 contains charging apparatus . . . and can be closed by a hinged lid 44. . . . The hearing aid 10 has a sound tube 11 and earmould 13 and is shown partly cut away to disclose some of its internal parts." *Id.* at 1:88–96. The case also contains a well 38 in which the hearing aid may be seated. *Id.* at 2:34–39.

The hearing aid contains an accumulator cell 14 with two terminals, 14a and 14b. Accumulator cell terminal 14a and a "supply terminal 20a of an amplifier 20 for the aid" are connected to one end of a coil 18a. *Id.* at 2:1–6. The other end of the coil 18b is connected to a terminal 22a of a rectifier 22. *Id.* at 2:6–11. A second terminal of the rectifier 22b is connected to accumulator cell terminal 14b and to "one contact of a magnetically actuated reed relay switch 24." *Id.* "The other contact of the switch 24 is connected to the other supply terminal 20b of the amplifier 20. The switch 24 includes a permanent magnet (not shown) which, in use,

biases the contacts closed to connect the accumulator 14 to the amplifier 20." *Id.* at 2:11–17.

Brown explains that "[t]he case 12 includes a second coil 28 housed in a chamber 30 in the box." *Id.* at 2:22–23. A cover 36 covers the chamber 30 and has a magnet fixed to it. *Id.* at 2:34–36, 2:42–48. When the hearing aid is placed in its well 38, the magnet 40 "effectively neutralises the magnetic field provided by the magnet in the reed relay switch 24 and the switch contacts open to disconnect the accumulator 14 from the amplifier 20" (i.e., the hearing aid is turned off). *Id.* at 2:42–48. When the contacts of the reed relay switch 24 are open and the hearing aid is in the case 12, "[t]he alternating voltage induced in the coil 18 by the magnetic field due to the current flowing in the coil 28 is rectified by the rectifier 22 and applied to recharge the accumulator 14" (i.e., the hearing aid is recharged). *Id.* at 2:62–67. "When the hearing aid is removed from the case 12 the switch 24 closes to connect the accumulator 14 to the amplifier 20 and the aid operates in the normal manner" (i.e., the hearing aid is turned on). *Id.* at 2:49–52.

To summarize, Brown describes a hearing aid with a charging case in which the hearing aid is turned on and off by a reed relay switch that is operated using a magnet fixed to the case. *Id.* at 2:125–3:21.

2. Hain (Ex. 1004)

Hain is a certified English translation of German Patent Application No. DE 102007039455 A1, titled "Hearing aid system with magnetic field sensors," filed on August 21, 2007, and published on February 26, 2009. Ex. 1004, codes (10), (22), (43), (54); *see also* Ex. 1009 (copy of original reference in German).

Figure 1 of Hain is reproduced below.

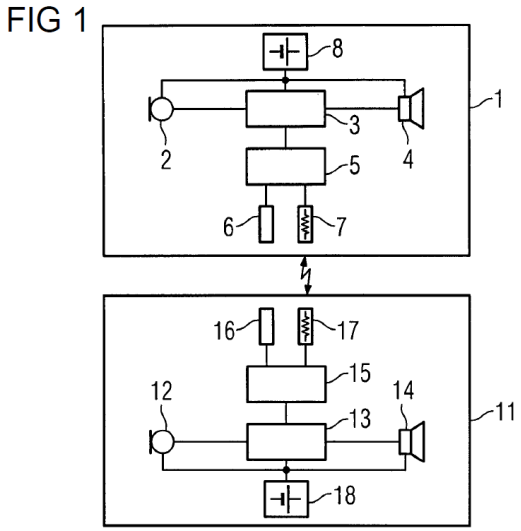

Figure 1 is a diagram of a hearing aid system. Ex. 1004 ¶ 16. Figure 1 shows a hearing aid system having a first hearing aid 1 and a second hearing aid 11 that can each be worn on the head of a user. *Id.* ¶ 18. Hain explains that "the hearing aids (1, 11) have sensor devices (6, 16) . . . which are used in order to detect whether the relevant hearing aid (1, 11) is in a magnetic field that exceeds a specific field strength." Ex. 1004, Abstr. The sensor devices are reed contacts or other magnetic field sensors, such as Hall sensors. *Id.* ¶ 10. "If the reed contacts 6 or 16 are in the immediate vicinity of a magnetic field whose field strength exceeds a certain threshold value, the reed contacts 6 or 16 close." *Id.* ¶ 18. "[T]he status of reed contacts 6 and 16 can be queried by the signal transmission and control units 5 and 15, respectively." *Id.*

Hain's hearing aid system includes "an automatic detection of the hearing situation 'telephoning' and an automatic switching off of the hearing aids (1, 11) when they are removed from the head." *Id.* at Abstr. According to Hain, "[t]he setting of the parameters of the individual hearing programs as well as the settings for the individual compensation of the hearing loss of

a user takes place by means of the signal transmission and control units 5 or 15, to which the transmitting and receiving coils 7 or 17 are connected for wireless data transmission, in conjunction with an external programming unit (not shown)." *Id.* ¶ 18.

Figure 2 of Hain is reproduced below.

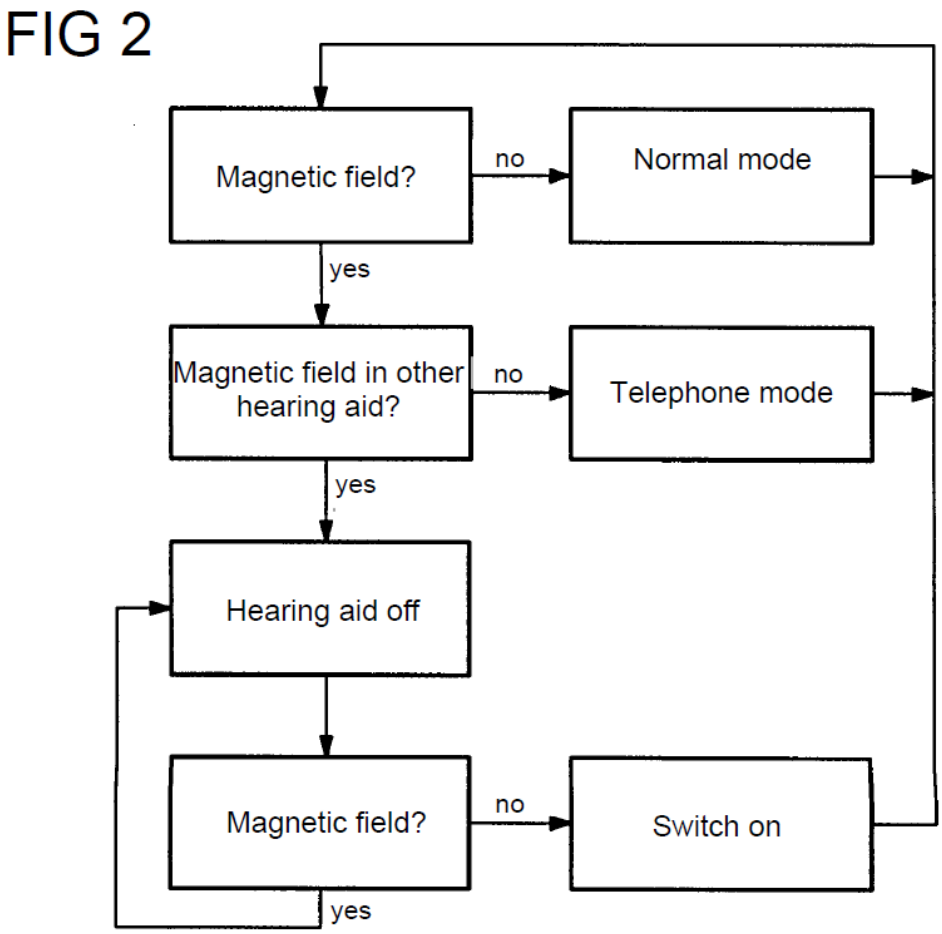

Figure 2 of Hain is a flow chart depicting a method "for automatically detecting the hearing situation 'telephoning' and for automatically switching off two hearing aids of a hearing aid system." Ex. 1004 ¶ 21. Figure 2 shows that the "telephoning" operating mode can be set when one of the hearing aids detects "a telephone receiver emitting a magnetic field." *Id.* ¶ 4. "If only one of the two hearing aids [] detects a magnetic field, it can be deduced that the hearing situation is 'telephoning.'" *Id.* at Abstr. In such an

example, "only the hearing aid that supplies the ear to which the telephone receiver is held is automatically switched to telephoning mode. The hearing aid that supplies the other ear, on the other hand, is not automatically switched to telephoning mode immediately." *Id.* ¶ 10.

Figure 2 also shows that the hearing aids may be automatically switched off immediately after use when they are placed in the storage box, or automatically switched on when they are removed from the storage box. Ex. 1004 ¶¶ 11, 22. "For example, there is a permanent magnet in a storage box for the hearing aid in question, a corresponding sensor device can also determine here that the hearing aid is located in the storage box, so that the hearing aid is switched off automatically." *Id.* ¶ 11. "[I]f both hearing aids detect a relatively strong magnetic field in their immediate vicinity, then this is an indication that the hearing aids are located in the storage box and can be switched off." *Id.* ¶ 13. When the hearing aids are on, they remain in "normal operation" for as long as no magnetic field is detected. *Id.* ¶ 21.

The hearing aids can distinguish between telephoning and storage in the box by a wireless signal transmission between the two hearing aids. Ex. 1004 ¶ 13. "At least one of the hearing aids transmits to the other hearing aid the information as to whether an external magnetic field is detected. It therefore provides the information about the presence of an external magnetic field from both hearing aids." *Id.*

To summarize, Hain describes a hearing aid system with a storage box in which the hearing aids are automatically turned on or off based on whether the hearing aids are in the storage box because the storage box contains at least one magnet which emits a magnetic field that opens or closes a reed sensor switch in each hearing aid.

3. Steinbrecher (Ex. 1006)

Steinbrecher is a certified English translation of European Patent Application Publication No. EP 1727395 B1 titled "Method and apparatus for charging hearing aids inductively," filed on February 8, 2006, and published on August 20, 2008. Ex. 1006, codes (11), (12), (22), (45), (54); *see also* Ex. 1011 (copy of original reference in German). Steinbrecher describes "a procedure and a device for the contactless loading of an accumulator battery in a hearing aid which, during the charge process, is located in a charging shell." Ex. 1006 ¶ 1. The state of the hearing aid's battery is constantly monitored as long as the hearing aid remains in the charging shell and is "maintained at the nominal value of the charge level by a trickle charge." *Id.* ¶ 25.

Figure 1 of Steinbrecher is reproduced below.

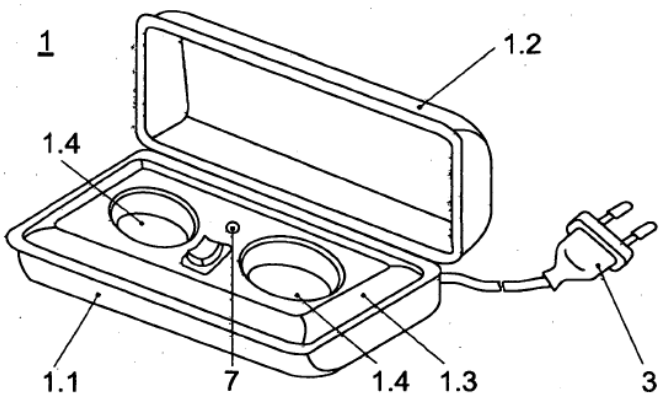

Fig. 1

Figure 1 of Steinbrecher depicts "a perspective view of a charging shell." Ex. 1006 ¶ 23. The charging shell shown in Figure 1 includes a housing bottom part 1.1, a lid 1.2, and an intermediate floor 1.3 with receiving recesses 1.4 for hearing aids. *Id.* ¶ 24. The charging shell includes a first circuit arrangement between the housing bottom part 1.1 and the intermediate floor 1.3 that connects to a mains plug 3. *Id.*

Steinbrecher's Figure 2 is reproduced below.

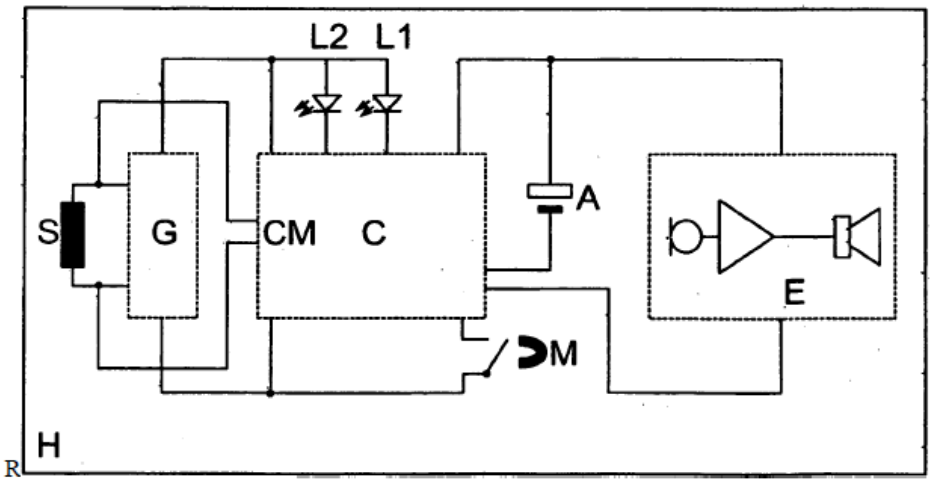

Fig. 2

Steinbrecher's Figure 2 depicts the circuit arrangement of a hearing aid. Ex. 1006 ¶¶ 23, 25. The hearing aid H circuit arrangement shown in Figure 2 contains a secondary coil S, a rectifier G, electronics E, a battery A, a charge controller C, a reed contact microswitch M, and light-emitting diodes (LEDs) L1 and L2. *Id.* ¶ 25. Steinbrecher explains that "[t]he hearing aid H is supplied with energy via the energy receiving device in the form of the secondary coil S and rectified with the rectifier G. . . . After the hearing aid H has been inserted into the charging shell, the charge controller C is activated." *Id.* According to Steinbrecher, "[t]he charge controller C has a control output with which the charge process can be started and ended." *Id.* The charge controller C detects the current state of charge of the battery A, determines the amount of charge required to complete the charging, and feeds the amount of charge required to complete the charging into the battery A. *Id.*

"In a preferred embodiment, the hearing aid's electronics are switched off using the charge controller, in particular during the charge process and as

soon as the hearing aid is located in the charging shell. This ensures that energy is not consumed unnecessarily and feedback whistling does not occur." Ex. 1006 ¶ 18. The input of the charging controller C is controlled with the reed contact microswitch M by disconnecting the electrical connection between the battery and the hearing aid's electronics. *Id.* ¶¶ 18–19, 25. The microswitch is actuated by a built-in permanent magnet when the hearing aid is placed in the charging case. *Id.* ¶ 25.

To summarize, Steinbrecher describes a hearing aid system with a charging shell in which the hearing aids are turned off using a reed contact microswitch when they are placed in the charging case.

4. Shaffer (Ex. 1003)

Shaffer is a U.S. patent application publication titled "Earbud Charging Case for Mobile Device," filed on October 9, 2014, and published on August 27, 2015. Ex. 1003, codes (12), (22), (43), (54). Shaffer describes "[a] case for a mobile electronic device [that] includes a portion configured to receive power via induction charging, an aperture configured to receive an earbud, and circuitry configured to simultaneously charge the earbud and the mobile electronic device." *Id.* at Abstr.

Figure 3A of Shaffer is reproduced below.

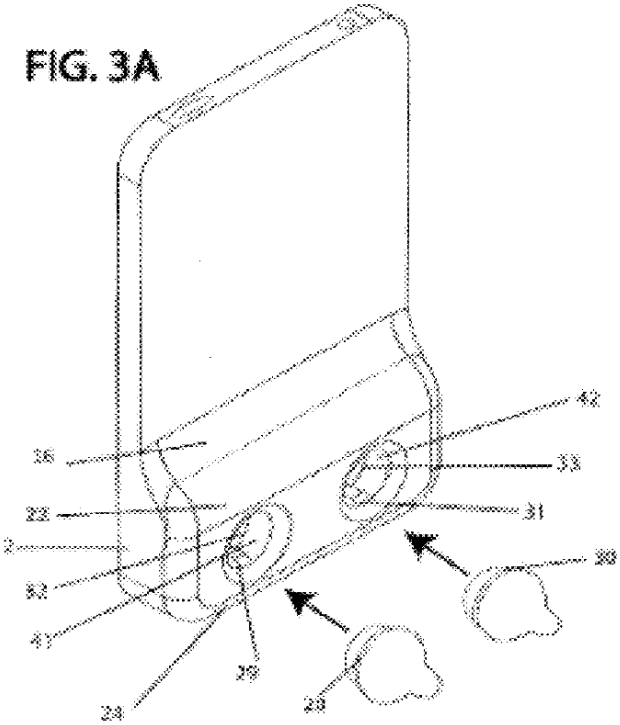

Figure 3A of Shaffer depicts a rear view of a mobile device case with an earbud dock and the mobile device removed from the case with earbuds entering the case. Ex. 1003 ¶¶ 14, 18. Figure 3A includes a mobile device case and earbuds that have magnetized earbud aperture rings (28, 30). *Id.* ¶ 42. "Examples of earbuds include in-ear headphones, hearing aids and the like." *Id.* ¶ 32. The mobile device case has a solid rear connection (22) with a lower portion (24), middle portion (22), and upper portion (16). *Id.* ¶ 41. The solid rear connection provides housing for the earbuds in earbud receiving apertures (32, 33) that contain earbud electrical contacts (29, 31) and aperture magnetic contact strips (41, 42). *Id.* ¶¶ 40–42. Shaffer explains that the earbud electrical contacts provide electrical charge to the earbuds, but the aperture magnetic contact strips "may also serve as electrical contacts, delivering charge directly to the earbud magnetic contact

strips from the plug without the need for additional prongs or leaders" in some embodiments. *Id.* ¶ 40, 42.

Shaffer's Figure 10 is reproduced below.

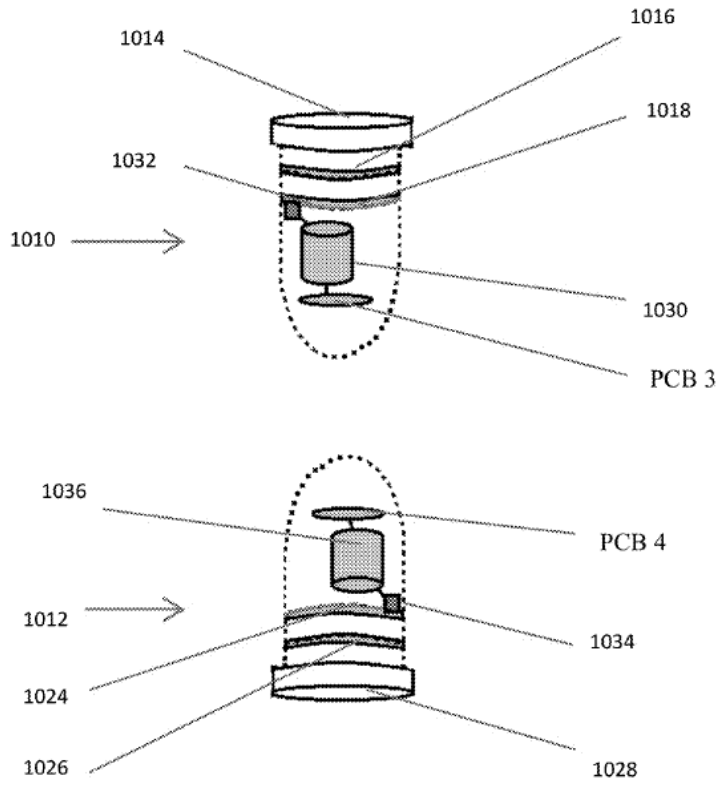

Fig. 10

Shaffer's Figure 10 depicts "various features of an embodiment of a set of earbuds." Ex. 1003 ¶ 29. "FIG. 10 illustrates an embodiment in which the earbuds are equipped with features that enable them to automatically trigger on and off." *Id.* ¶ 62. The "earbuds 1010 and 1012 include earbud rechargeable batteries 1030 and 1036 and earbud electrical contacts 1032 and 1034. The earbuds are outfitted with magnetic rings 1016 and 1026 that allow a connection with magnetized earbud aperture rings to ensure the earbuds remain securely retained within earbud apertures." *Id.* "Wireless earbuds typically include internal components, such as a transmitter/receiver (e.g. Bluetooth®, or near field communication equipped) that communicates

wirelessly with a mobile smart phone or other device" and "may be connected to printed circuit boards PCB 3 and PCB 4 within the earbuds and may contain encoded firmware or other programming instructions to automatically trigger on when the earbuds are removed from the earbud apertures, and turn off upon return to the apertures." *Id.* ¶¶ 62–63. Shaffer explains that

> [e]ach earbud may include one or more contact sensors, such as pressure sensors or magnetic sensors that detect when the earbud is in (or out of) the aperture and which send a corresponding signal to the earbud PCBs. Firmware embedded within the earbud PCBs could cause a circuit that includes the rechargeable earbud batteries 930 and 934 to switch on or off, or return them to a low-energy consumption idle mode.

Id.

To summarize, Shaffer describes "a mobile device case that serves as an electrical charger and storage dock for rechargeable wireless audio earbuds." *Id.* ¶ 2.

5. Sørensen (Ex. 1005)

Sørensen is a U.S. patent titled "Listening System Comprising a Charging Station with a Data Memory," filed on October 12, 2009, and issued on September 11, 2012. Ex. 1005, codes (12), (22), (45), (54). Sørensen describes "[a] listening system, e.g. a hearing aid system, including a charging station and one or more listening devices, e.g. hearing instruments." *Id.* at Abstr. Sørensen's hearing aid system includes:

> a) a hearing instrument including a rechargeable battery for energizing the hearing instrument, and a volatile data memory, wherein basic data for the configuration of the hearing instrument are stored during normal operation, b) a charging station adapted for allowing a hearing instrument to be mounted and the battery to be recharged without removing the battery

> from the hearing instrument, and c) a connection allowing communication between the charging station and the hearing instrument, to allow the basic data for the configuration of the hearing instrument to be transferred from the data memory of the charging station to the data memory of the hearing instrument, when the hearing instrument is mounted in the charging station.

Id.

Sørensen explains that the hearing instrument may include "an input transducer for picking up an input sound in the environment and converting it to an electric input signal and an output transducer for converting an electric output signal to an output sound adapted for being presented to a user wearing the hearing instrument." Ex. 1005, 2:36–41. The hearing instrument may also include "a signal processor electrically connected to the input and output transducers and adapted to perform signal processing on the electric input signal using at least some of the basic data for the configuration of the hearing instrument read from the volatile memory of the hearing instrument" so that the hearing instrument can be adapted to the user's hearing impairment. *Id.* at 2:42–51.

The hearing aid system may be adapted to monitor the battery voltage of the hearing instrument using a monitoring unit that is located in the hearing instrument or the charging station. *Id.* at 2:52–59. "In an embodiment, the hearing aid system is adapted to provide that data transfer between the charging station and the hearing instrument is initiated automatically, when the hearing instrument is mounted in the charging station (e.g. electrically connected to the charging station)." *Id.* at 3:48–52. The connection between the hearing instrument and the charging station may be wired or wireless, such that data transfer and charging can be

accomplished using a wired connection via galvanic contact, or using a wireless connection via induction. *Id.* at 3:59–4:23.

Sørensen's Figure 1 is reproduced below.

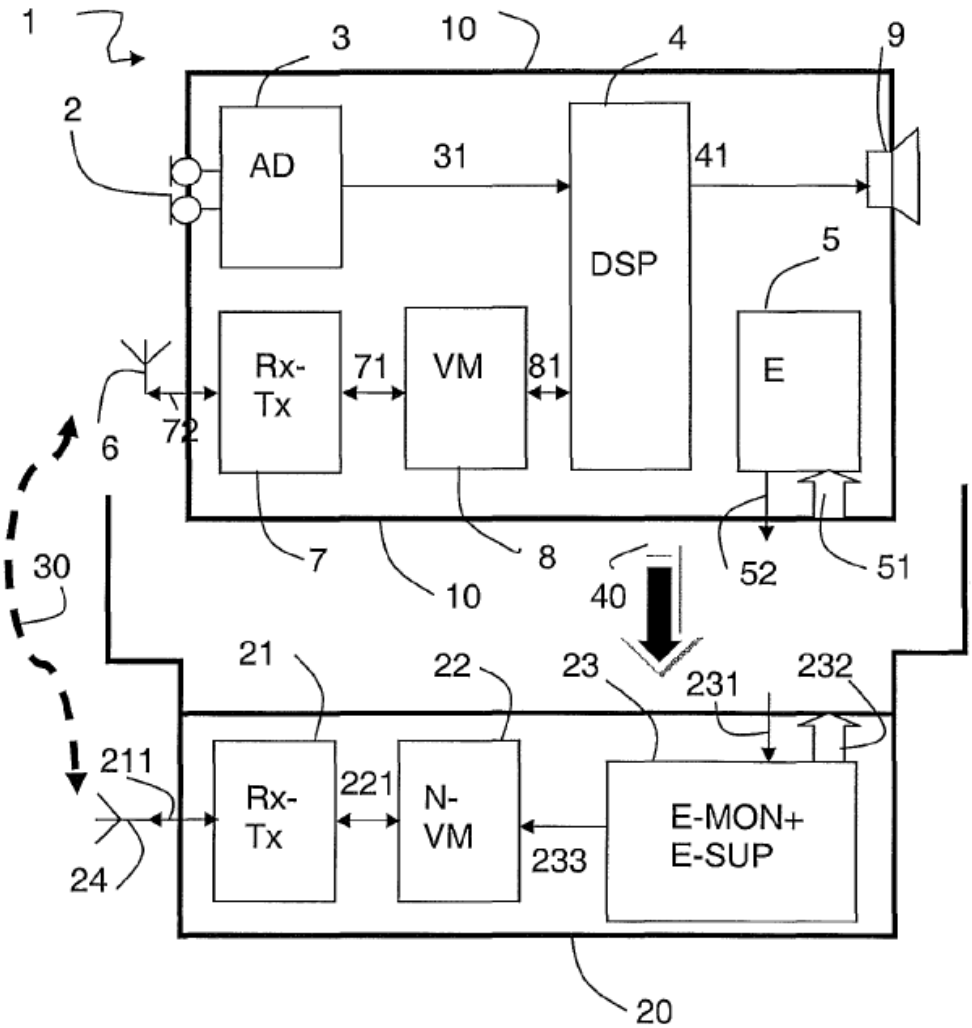

Fig. 1

Sørensen's Figure 1 depicts "a hearing aid system comprising a hearing instrument and a charging station for recharging a rechargeable battery of the hearing instrument." Ex. 1005, 6:1–3. The hearing aid system in Figure 1 includes a hearing instrument 10 and its functional blocks, and a charging station 20 for recharging a rechargeable battery of the hearing instrument and its functional blocks. *Id.* at 6:26–37. The hearing instrument

includes rechargeable batteries 5, a microphone unit 2, an AD-converter 3, a signal processor 4, a speaker 9, a volatile data memory 8, transceivers 6 and 7, and connections 51 and 52. *Id.*; *see also id.* at 6:64–7:20. The charging station includes a data memory 22, transceivers 21 and 24, and a source of electric energy 23. *Id.* at 7:26–54. When the hearing instrument is mounted 40 to the charging station, the devices are wirelessly connected 30 and two-way wireless communication and charging can occur. *Id.* at 6:37–57. "The wireless signal 30 can e.g. be an inductive signal (based on two electric coils that are coupled inductively with each other) or an electromagnetic RF-signal, e.g. based on a communications standard, e.g. BlueTooth or be an optical 20 signal (e.g. comprising or constituted by infrared light)." *Id.* at 8:16–20.

To summarize, Sørensen describes "a system comprising a hearing instrument comprising a rechargeable energy source and a charging station for recharging the rechargeable energy source" and "a memory for storing the basic data of the hearing instrument (i.e. the data that are necessary for the hearing instrument to work properly, such as identification data, configuration data, program data, etc.)." *Id.* at 1:50–56.

F. Ground 1: Alleged Anticipation of Claims 10 and 14 by Brown Under § 102(a)[15]

Under Ground 1, Petitioner contends the subject matter of challenged claims 10 and 14 is anticipated by Brown. Pet. 17–22. Patent Owner argues that Petitioner's showing is insufficient. Prelim. Resp. 18–19.

---

[15] *See* Pet. 5–6 (stating that Brown is prior art under 35 U.S.C. § 102(a)(1)). At this point in the proceeding, Patent Owner does not take issue with

We have considered the parties' arguments and the evidence presented at this stage, and we address them in the context of representative claim 10. For the reasons explained below, including Patent Owner's arguments, we determine that Petitioner has demonstrated a reasonable likelihood that it would prevail in showing that the subject matter of claims 10 and 14 is anticipated by Brown.

1. Independent Claim 10[16]

a) [10Preamble]: "A wireless earpiece, comprising:"

Petitioner contends Brown discloses the preamble. Pet. 18. According to Petitioner, hearing aid 10 in Brown (Ex. 1007, Fig. 1) discloses a wireless earpiece, i.e., "[i]n Fig. 1 there is shown a miniature hearing aid 10 and a receptacle or case [12] for storing the hearing aid 10 when the aid is not in use." Pet. 18 (quoting Ex. 1002 (Kiaei Decl.), ¶ 40).[17] *See* § III.E.1, *supra*.

At this stage, Patent Owner relies on its proffered construction of the term "earpiece" as requiring insertion in the user's ear (*see* § III.D.2, *supra*), by arguing "Brown does not disclose 'a wireless earpiece' as properly construed because Brown does not disclose an 'earpiece configured to fit

---

Petitioner's general statement that Brown qualifies as prior art to the '853 patent under § 102(a)(1). *See generally* Prelim. Resp.

[16] Bracketing and parenthetical numbering of claim limitations in claim 10 are that adopted by Petitioner. *See* Pet. 18–22.

[17] We note Petitioner refers to "receptacle or case" 12 as "receptacle or case 10." Pet. 18. We view this as harmless error and, as supported by Brown, we interpret the "receptacle or case" as properly having the label "12." "The case **12** contains charging apparatus to be described hereinafter." Ex. 1007, 1:91–92.

into a user's ears'. . . . Instead, Brown discloses a hearing aid that is worn *on* the ear." Prelim. Resp. 18. Patent Owner argues that Figure 1 of Brown "discloses that everything but earmould 13 and a portion of sound tube 11 is housed in the portion of Brown's hearing aid that sits outside the ear. Thus, Brown fails to disclose an earpiece, as properly construed." Prelim. Resp. 19.

As discussed above (*see* § III.D.2, *supra*), at this stage of the proceeding, we decline to adopt Patent Owner's proffered construction of the term "earpiece[s]."

Even if we were to assume that Patent Owner's proffered construction will ultimately prevail, we note earmould 13, illustrated in Brown's Figure 1, is configured to fit *into* the user's ear, and is a constituent part of hearing aid 10. "The hearing aid 10 has a sound tube 11 and earmould 13 and is shown partly cut away to disclose some of its internal parts." Ex. 1007, 1:94–96. Thus, it appears that Brown's earmould 13, a part of hearing aid 10, fits *into* a user's ear.

Accordingly, on the record before us, and lacking evidence to the contrary, it appears that the preamble of claim 10 is limiting,[18] such that the recited "wireless earpiece" in claim 10 reads on Brown's hearing aid 10, even under Patent Owner's preferred construction, particularly in light of earmould 13 as illustrated in Figure 1 of Brown. Ex. 1007, Fig. 1 (element 13). Nonetheless, the burden remains on Petitioner to demonstrate unpatentability. *See Dynamic Drinkware*, 800 F.3d at 1378.

---

[18] Because we find the preamble to be limiting, at this stage, on this record, we also find the wireless earpiece of the preamble provides antecedent basis for the wireless earpiece discussed throughout the claim.

Petitioner's assertions and explanations are consistent with and supported by the evidence cited by Petitioner. On this record, Petitioner has shown sufficiently for purposes of institution that Brown discloses claim 10's preamble.

b) [10A]: "circuitry operating the wireless earpiece;"

Next, addressing the limitations recited in the body of the claim, Petitioner contends Brown discloses limitation [10A]. Pet. 18–19. Specifically, according to Petitioner, amplifier 20 of Brown discloses this limitation. Pet. 18.

In connection with limitation [10A], Patent Owner again argues, based on their proposed construction of the recited "earpiece," that "Ground 1 fails in its entirety" (Prelim. Resp. 19) because "Brown fails to disclose an earpiece, as properly construed, comprising the elements claimed in limitations [10A]–[10C], including at least the claimed circuitry, battery, and reed switch." *Id.*

We addressed the construction of the recited "earpiece" above, and decline, at this stage of the proceeding, to adopt Patent Owner's proffered construction. *See* §§ III.D.2, III.F.1.a), *supra*.

Accordingly, on the record before us, and lacking evidence or argument to the contrary, it appears that the recited "circuitry" in limitation [10A] reads on Brown's amplifier 20. *See* Ex. 1007, Fig. 2, 2:1–21.

Nonetheless, we remind the parties that the burden remains on Petitioner to demonstrate unpatentability. *See Dynamic Drinkware*, 800 F.3d at 1378.

Accordingly, at this stage of the proceeding, on this record, we find Petitioner's unrebutted assertions and explanations (Pet. 18–19) are

consistent with and supported by the evidence cited by Petitioner with respect to limitation [10A], i.e., "circuitry operating the wireless earpiece."

On this record, for purposes of this Decision, Petitioner has shown sufficiently that Brown discloses limitation [10A].

c) [10B]: "a battery powering the circuitry of the wireless earpiece;"

Petitioner contends Brown discloses limitation [10B]. Pet. 19–20. According to Petitioner, accumulator cell 14 of Brown meets this limitation. Pet. 19.

Other than reiterating the claim construction issue of the recited "earpiece," discussed above, Patent Owner does not allege any specific deficiencies in this aspect of Petitioner's showing. *See* Prelim. Resp. 18–19.

Nonetheless, the burden remains on Petitioner to demonstrate unpatentability. *See Dynamic Drinkware*, 800 F.3d at 1378.

Accordingly, at this stage of the proceeding, on this record, we find Petitioner's unrebutted assertions and explanations (Pet. 19–20) are consistent with and supported by the evidence cited by Petitioner with respect to limitation [10B], i.e., "a battery powering the circuitry of the wireless earpiece."

On this record, for purposes of this Decision, Petitioner has shown sufficiently that Brown discloses limitation [10B].

d) [10C]: "a reed switch connecting the battery to the circuitry"

Petitioner contends Brown discloses limitation [10C]. Pet. 20–22. According to Petitioner, Brown's reed relay switch 24 discloses this limitation. Pet. 20.

Other than the claim construction issue of the recited "earpiece," discussed above, Patent Owner does not allege any specific deficiencies in this aspect of Petitioner's showing. *See* Prelim. Resp. 18–19.

Nonetheless, the burden remains on Petitioner to demonstrate unpatentability. *See Dynamic Drinkware*, 800 F.3d at 1378.

Petitioner's unrebutted assertions and explanations (Pet. 20–22) are consistent with and supported by the evidence cited by Petitioner. On this record, for purposes of this Decision, Petitioner has shown sufficiently that Brown discloses limitation [10C], i.e., "a reed switch connecting the battery to the circuitry, wherein the reed switch connects the circuitry to the battery when a magnetic field is not detected, and wherein the reed switch disconnects the circuitry from the battery when a magnetic field is detected."

e) Preliminary Conclusion for Anticipation of Claim 10 by Brown

For the reasons provided above, Petitioner has sufficiently shown that Brown anticipates independent claim 10. We have considered Patent Owner's arguments that Petitioner's arguments are insufficient with respect to the recited "wireless earpiece" and, at this stage, on this record, we do not agree.

Accordingly, we are persuaded that Petitioner has shown a reasonable likelihood that it would prevail in establishing that the subject matter of claim 10 is anticipated by Brown.

2. Dependent Claim 14

Claim 14 depends directly from claim 10. Ex. 1001, 11:43–45. Hence, claim 14 incorporates all of claim 10's limitations. *See* 35 U.S.C. § 112 ¶ 4.

Petitioner contends the subject matter of dependent claim 14 is anticipated by Brown. *See* Pet. 22. Petitioner provides analysis addressing claim 14's limitations and identifies evidence supporting its position. *Id.*

Other than arguments presented regarding claim 10, Patent Owner does not, at this stage, dispute Petitioner's additional arguments, analysis, or evidence for dependent claim 14. *See* Prelim. Resp. 19. Patent Owner merely argues "[b]ecause Claim 14 depends from Claim 10, Brown fails to disclose the elements of Claim 14 for the reasons discussed above, and Ground 1 fails in its entirety." *Id.*

We preliminarily find Petitioner's analysis of dependent claim 14 sufficient to demonstrate a reasonable likelihood of success in its challenges to claim 14 as anticipated by Brown under Ground 1.

Nonetheless, the burden remains on Petitioner to demonstrate unpatentability. *See Dynamic Drinkware*, 800 F.3d at 1378.

3. Ground 1: Summary

In light of the above analysis, we preliminarily determine that Petitioner's evidence and arguments are sufficient to demonstrate a reasonable likelihood of success in its challenges to claims 10 and 14 under Ground 1, anticipation by Brown.

G. Ground 2: Alleged Anticipation of Claims 1–3 and 5 by Hain Under § 103(a)[19]

Petitioner contends the subject matter of challenged claims 1–3 and 5 is anticipated by Hain. Pet. 22–30. Patent Owner argues that Petitioner's showing is insufficient. Prelim. Resp. 19–21.

We have considered the parties' arguments and the evidence presented at this stage, and we address them in the context of representative claim 1. For the reasons explained below, including Patent Owner's arguments, we determine that Petitioner has demonstrated a reasonable likelihood that it would prevail in showing that the subject matter of claims 1–3 and 5 is anticipated by Hain.

1. Independent Claim 1

a) [1Preamble]: "A method for managing wireless earpieces, comprising:"

Petitioner contends Hain discloses the preamble. Pet. 23–24. According to Petitioner, Figure 1 of Hain shows a system that includes a pair of wireless earpieces in the form of hearing aids 1 and 11 (Pet. 23, (citing Ex. 1004, Fig. 1; ¶¶ 1, 13, 18; claims 1, 7)), and "Hain's system carries out a method to manage hearing aids 1 and 11, e.g., by detecting whether the hearing aids are placed in the magnetic storage case and powering down the hearing aid circuitry when the hearing aids are in the case." Pet. 24 (citing Ex. 1004, ¶¶ 11, 18, 19, 21, 22; claims 1, 5–7, and 9).

---

[19] *See* Pet. 5–6 (stating that Hain is prior art under 35 U.S.C. § 102(a)(1)). At this point in the proceeding, Patent Owner does not take issue with Petitioner's general statement that Hain qualifies as prior art to the '853 patent under § 102(a)(1). *See* Prelim. Resp. 11–16.

At this stage, Patent Owner does not allege any deficiencies in this aspect of Petitioner's showing. *See* Prelim. Resp. 19–21. Nonetheless, the burden remains on Petitioner to demonstrate unpatentability. *See Dynamic Drinkware*, 800 F.3d at 1378.

Petitioner's assertions and explanations are consistent with and supported by the evidence cited by Petitioner. On this record, Petitioner has shown sufficiently that Hain discloses claim 1's preamble.

b) [1A]: "powering circuitry of the wireless earpieces utilizing a high power mode"

Next, addressing the limitations recited in the body of the claim, Petitioner contends Hain discloses limitation [1A]. Pet. 24–27. According to Petitioner, Hain's microphones 2 and 12, signal processing units 3 and 13, receivers 4 and 14, and signal transmission and control units 5 and 15 all are powered using a high-power mode in which the hearing aids are fully powered and functional. Pet. 24.

At this stage, Patent Owner does not allege any deficiencies in this aspect of Petitioner's showing. *See* Prelim. Resp. 19–21. Nonetheless, we remind the parties that the burden remains on Petitioner to demonstrate unpatentability. *See Dynamic Drinkware*, 800 F.3d at 1378.

Accordingly, at this stage of the proceeding, on this record, we find Petitioner's unrebutted assertions and explanations (Pet. 24–27) are consistent with and supported by the evidence cited by Petitioner with respect to limitation [1A], i.e., "powering circuitry of the wireless earpieces utilizing a high power mode in response to detecting a magnetic field is not applied to one or more of the wireless earpieces." On this record, for

purposes of this Decision, Petitioner has shown sufficiently that Hain discloses limitation [1A].

c) [1B]: "altering the power sent to the circuitry of the wireless earpieces to a low power mode in response to detecting a magnetic field is applied to one or more of the wireless earpieces"

Petitioner contends Hain discloses limitation [1B]. Pet. 27–29. According to Petitioner, "Hain discloses altering the power sent to the circuitry of the wireless earpieces (e.g., hearing aids 1 and 11) to a low power mode (e.g., residual power state) in response to detecting a magnetic field is applied to one or more of the wireless earpieces." Pet. 27 (citing Ex. 1002, ¶ 51).

Patent Owner alleges that Petitioner's showing is deficient. *See* Prelim. Resp. 19–21. Further to this point, Patent Owner alleges "Petitioners ignore the claim language, wherein the high power mode is utilized 'in response to detecting a magnetic field is not applied to *one or more* of the wireless earpieces.'" Prelim. Resp. 19.[20] This alleged deficiency hinges on Figure 2 of Hain, in which "if there is a magnetic field applied to one hearing aid but not the other, such as by a telephone receiver emitting a magnetic field, the system will operate in 'telephone mode'. . . . In this mode, the earpieces remain powered on." *Id*. at 20 (citing Ex. 1004,[21] Fig. 2, ¶¶ 4, 10, 12, 13).

---

[20] Contrary to Patent Owner's heading in § V.B.1 of the Preliminary Response setting up an argument against limitation [1B] being anticipated by Hain (the "altering the power" limitation), Patent Owner's particular response quoted here appears to be an attempt to argue limitation [1A] (the "powering circuitry" limitation), and not limitation [1B].

[21] In the first instance, Patent Owner mistakenly refers to the Hain reference as Exhibit 1006 instead of Exhibit 1004. Prelim. Resp. 20.

Apparently with respect to "altering the power" limitation [1B], Patent Owner acknowledges if "*both* hearing aids detect a magnetic field, such as by being located in the disclosed storage box, the hearing aids are automatically switched off." Prelim. Resp. 20 (citing Ex. 1004, ¶ 13). Patent Owner argues Hain automatically switches off the hearing aids when *both* earpieces detect the presence of a magnetic field but, attempts to draw a distinction concerning this point because claim 1, according to Patent Owner, requires that switching to low power mode occurs when *one or more* of the wireless earpieces detects a magnetic field. Prelim. Resp. 20–21.

Still with apparent reference to limitation [1B] Patent Owner argues, "to anticipate the claims, Hain must disclose an earpiece that switches to a low power mode when only it—and not its pair—detect[s] a magnetic field. And because Hain does not disclose this—but instead discloses automatically switching off the hearing aids when both detect a magnetic field," ***Hain does not disclose limitation [1A]***, i.e., "powering circuitry of the wireless earpieces utilizing a high [power] mode in response to detecting a magnetic field is not applied to one or more of the wireless earpieces." Prelim. Resp. 21.

Based upon this incongruent argument, it appears that Patent Owner has conflated and mistakenly argued limitation [1A], addressed in § III.G.1.b), *supra*, instead of limitation [1B], as indicated in the associated heading in the Preliminary Response.

Assuming Patent Owner intended to conclude that Hain does not anticipate limitation [1B] as indicated by the heading (Prelim. Resp. 19), and with respect to construction of the recited "*one or more* of the wireless earpieces," we note our reviewing court has repeatedly emphasized

> that an indefinite article "a" or "an" in "patent parlance carries the meaning of 'one or more" in open-ended claims containing the transitional phrase "comprising." That "a" or "an" can mean "one or more" is best described as a rule, rather than merely as a presumption or even a convention. The exceptions to this rule are extremely limited: a patentee must "evince[ ] a clear intent" to limit "a" or "an" to "one." The subsequent use of definite articles "the" or "said" in a claim to refer back to the same claim term does not change the general plural rule, but simply reinvokes that non-singular meaning.

SanDisk Corp. v. Kingston Technology Co., 695 F.3d 1348, 1360 (Fed. Cir. 2012) (citing *Baldwin Graphic Systems, Inc. v. Siebert*, 512 F.3d 1338, 1342 (Fed. Cir. 2008)).

We analogize the above holding in *SanDisk* to the issue presented by Patent Owner in this proceeding regarding the proper construction of the phrase "*one or more* wireless earpieces." Does such a recitation of "one or more" require that *only one* wireless earpiece switches to a low power mode in the presence of a magnetic field as argued by Patent Owner (Prelim. Resp. 21),[22] or does the holding in *SanDisk* apply such that "one or more wireless earpieces," when properly construed, is non-singular, and therefore reads on plural wireless earpieces?

On this record, we conclude the latter construction is in line with the conventional rules for patent claim construction, i.e., "one or more wireless earpieces" reads on plural (non-singular) wireless earpieces. We reach this determination because, if "a" or "an," construed by our reviewing court as non-singular in *SanDisk* can be construed to mean "one or more," then it

[22] Patent Owner does not cite to any controlling case law in support of their contention that "one or more" should be interpreted as "only one." *See generally* Prelim. Resp.

stands to reason that "one or more" in patent parlance would conversely mean "a" or "an," that allow for plural instances.

Figure 2 of Hain, as annotated by Petitioner, is reproduced below:

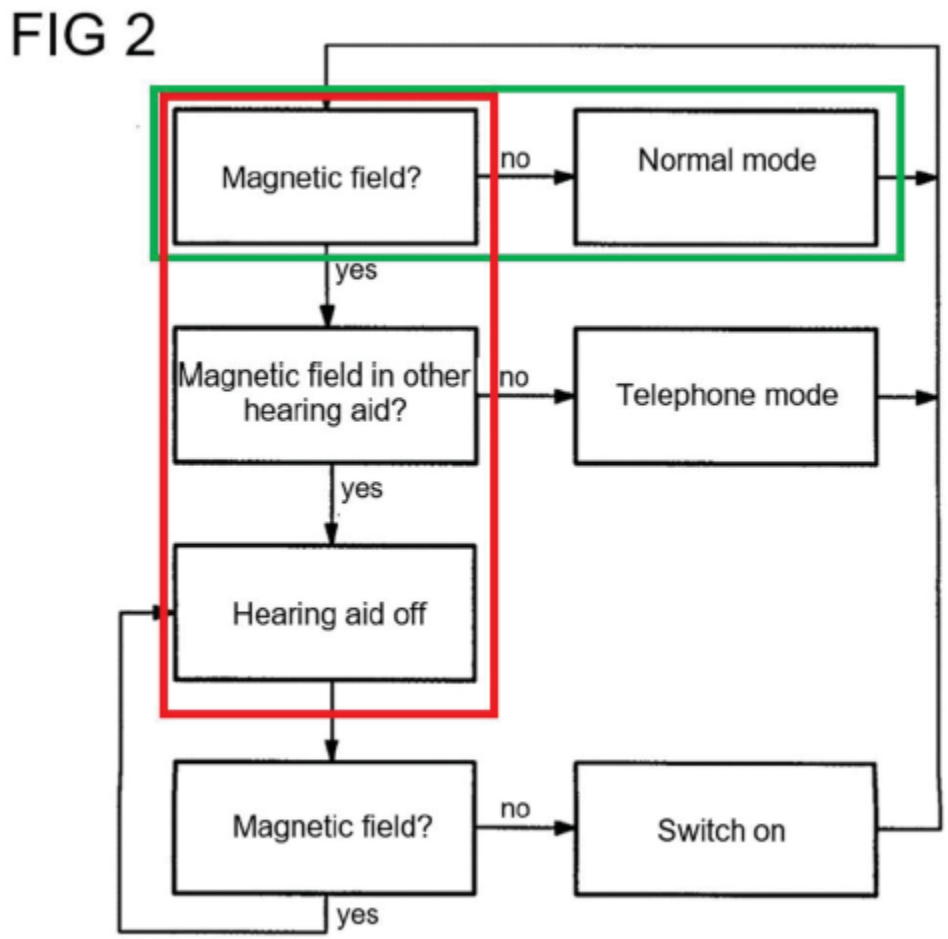

"Fig. 2 [is] a flow chart for carrying out a method according to the invention." Ex. 1004, ¶ 17.

> Fig. 2 shows a flow chart for automatically detecting the hearing situation "telephoning" and for automatically switching off two hearing aids of a hearing aid system according to the invention. In this case, a hearing aid of a relevant hearing aid system monitors permanently or cyclically for the presence of an external magnetic field. For as long as no magnetic field is detected, the hearing aid is in "normal operation."

Ex. 1004, ¶ 21.

> If it is detected that both hearing aids are in a magnetic field at the same time, this is an indication that the hearing aids are located in a storage box equipped with at least one permanent magnet. The hearing aids are then switched to a switch-off mode in which the hearing aids are largely switched off and only a residual power supply for the sensor device is maintained. As soon as there is no longer an external magnetic field, the hearing aid in question detects that it has been removed from the storage box. It will then turn itself on immediately.

Ex. 1004, ¶ 22. Petitioner's annotation of Figure 2 in **red** indicates the logic flow when a magnetic field is applied to both earpieces, resulting in a low-power mode, and the annotation in **green** indicates the earpiece is in a high-power or normal mode when a magnetic field is not applied to the earpieces. Pet. 26.

With regard to limitation [1B], Hain discloses:

> However, if a magnetic field is detected simultaneously by both hearing aids 1 and 11, it can be concluded that both hearing aids are located in a storage box equipped with at least one corresponding magnet. As soon as this situation is detected, the two hearing aids 1 and 11 switch off automatically. Advantageously, a residual power supply is maintained even in the switched-off state, by which the status of the reed contacts 6 and 16 can continue to be queried. As a result, the hearing aids 1 and 11 detect when they are being removed from the storage box. In this way, the hearing aids 1 and 11 can also be automatically switched on again. This eliminates the need for manually operated on-and-off switches.

Ex. 1004, ¶ 19.

Patent Owner alleges deficiencies in this aspect of Petitioner's showing with respect to how the phrase "one or more wireless earpieces" should be construed. *See* Prelim. Resp. 19–21. At this preliminary stage of the proceeding, we do not agree with Patent Owner's interpretation, as discussed above.

Nonetheless, the burden remains on Petitioner to demonstrate unpatentability. *See Dynamic Drinkware*, 800 F.3d at 1378.

Accordingly, at this stage of the proceeding, on this record, we find Petitioner's explanations (Pet. 27–29) are consistent with and supported by the evidence cited by Petitioner with respect to limitation [1B], i.e., "altering the power sent to the circuitry of the wireless earpieces to a low power mode in response to detecting a magnetic field is applied to one or more of the wireless earpieces." On this record, for purposes of this Decision, Petitioner has shown sufficiently that Hain discloses limitation [1B].

We remind the parties that the findings and conclusions in this Decision are preliminary, and do not preclude the parties from arguing proposed constructions of the claims during trial because claim construction, in general, is an issue to be addressed at trial. Claim construction will be determined at the close of all the evidence and after any hearing. As mentioned above, the parties are expected to assert all their claim construction arguments and evidence in their respective briefing as permitted by our rules.

d) Preliminary Conclusion for Anticipation of Claim 1 by Hain

For the reasons provided above, Petitioner has sufficiently shown that Hain anticipates independent claim 1. We have considered Patent Owner's arguments that Petitioner's arguments are insufficient with respect to limitation [1B], particularly with how "one or more wireless earpieces" should be construed and, at this stage, on this record, we disagree with Patent Owner.

Accordingly, we are persuaded that Petitioner has shown a reasonable likelihood that it would prevail in establishing that the subject matter of claim 1 is anticipated by Hain.

2. Dependent Claims 2, 3, and 5

Claims 2, 3, and 5 depend directly from claim 1. Ex. 1001, 10:64–11:4, 11:8–9. Hence, claims 2, 3, and 5 incorporate all of claim 1's limitations. *See* 35 U.S.C. § 112 ¶ 4.

Petitioner also contends the subject matter of dependent claims 2, 3, and 5 is anticipated by Hain. *See* Pet. 29–30. Petitioner provides analysis addressing each claim limitation and identifying evidence allegedly supporting its position, and we preliminarily find Petitioner's analysis of the dependent claims is sufficient to show a reasonable likelihood of success. Other than its arguments presented regarding claim 1, Patent Owner does not, at this stage, otherwise dispute Petitioner's additional arguments, analysis, or evidence for dependent claims 2, 3, and 5. *See* Prelim. Resp. 21. Nonetheless, the burden remains on Petitioner to demonstrate unpatentability. *See Dynamic Drinkware*, 800 F.3d at 1378.

On this record, we are persuaded that Petitioner sufficiently demonstrates a reasonable likelihood of succeeding in its challenges to claims 2, 3, and 5 as anticipated by Hain under Ground 2.

3. Ground 2: Summary

In light of the above analysis, we preliminarily determine that Petitioner's evidence and arguments are sufficient to demonstrate a reasonable likelihood of success in its challenges to claims 1–3 and 5 under Ground 2, anticipation by Hain.

H. Alleged Anticipation of Claims 10 and 21 by Steinbrecher Under § 102(a)[23]

Petitioner contends the subject matter of challenged claims 10 and 21 is anticipated by Steinbrecher. Pet. 30–42. Patent Owner argues that Petitioner's showing is insufficient. Prelim. Resp. 21–23.

We have considered the parties' arguments and the evidence presented at this stage, and we address them in the context of claims 10 and 21. For the reasons explained below, including Patent Owner's arguments, we determine that Petitioner has demonstrated a reasonable likelihood that it would prevail in showing that the subject matter of claims 10 and 21 is anticipated by Steinbrecher.

1. Independent Claim 10[24]

a) [10Preamble]: "A wireless earpiece, comprising:"

Petitioner contends Steinbrecher discloses the preamble. Pet. 31–32. According to Petitioner, hearing aid H discloses a wireless earpiece. *Id.* (citing Ex. 1006, Fig. 2, ¶ 25).

At this stage, Patent Owner does not allege any deficiencies in this aspect of Petitioner's showing. *See* Prelim. Resp. 21–23. Nonetheless, the burden remains on Petitioner to demonstrate unpatentability. *See Dynamic Drinkware*, 800 F.3d at 1378.

---

[23] *See* Pet. 5–6 (stating that Steinbrecher is prior art under 35 U.S.C. § 102(a)(1)). Patent Owner does not take issue with Petitioner's general statement that Steinbrecher qualifies as prior art to the '853 patent under § 102(a)(1). *See generally* Prelim. Resp.

[24] Bracketing and parenthetical numbering of claim limitations in claim 10 are that adopted by Petitioner. *See* Pet. 31–35.

Petitioner's unrebutted assertions and explanations are consistent with and supported by the evidence cited by Petitioner. On this record, Petitioner has shown sufficiently that Steinbrecher discloses the claim's preamble.

b) [10A]: "circuitry operating the wireless earpiece;"

Next, addressing the limitations recited in the body of the claim, Petitioner contends Steinbrecher discloses limitation [10A]. Pet. 32. According to Petitioner, Hearing Aid H's Electronics E in Figure 2 discloses circuitry operating the wireless earpiece. Pet. 32.

At this stage, Patent Owner does not allege any deficiencies in this aspect of Petitioner's showing. *See* Prelim. Resp. 21–23. Nonetheless, the burden remains on Petitioner to demonstrate unpatentability. *See Dynamic Drinkware*, 800 F.3d at 1378.

Accordingly, at this stage of the proceeding, on this record, we find Petitioner's unrebutted assertions and explanations (Pet. 32) are consistent with and supported by the evidence cited by Petitioner with respect to limitation [10A], i.e., "circuitry operating the wireless earpiece." On this record, for purposes of this Decision, Petitioner has shown sufficiently that Steinbrecher discloses limitation [10A].

c) [10B]: "a battery powering the circuitry of the wireless earpiece;"

Petitioner contends Steinbrecher discloses limitation [10B]. Pet. 33. According to Petitioner, Battery A in Figure 2 of Steinbrecher powers electronics E. Pet. 33 (citing Ex. 1006, Fig. 2, ¶¶ 18, 19, 25).

At this stage, Patent Owner does not allege any deficiencies in this aspect of Petitioner's showing. *See* Prelim. Resp. 21–23. Nonetheless, the

burden remains on Petitioner to demonstrate unpatentability. *See Dynamic Drinkware*, 800 F.3d at 1378.

Accordingly, at this stage of the proceeding, on this record, we find Petitioner's unrebutted assertions and explanations (Pet. 33) are consistent with and supported by the evidence cited by Petitioner with respect to limitation [10B], i.e., "a battery powering the circuitry of the wireless earpiece." On this record, for purposes of this Decision, Petitioner has shown sufficiently that Steinbrecher discloses limitation [10B].

d) [10C]: "a reed switch connecting the battery to the circuitry . . ."

Petitioner contends Steinbrecher discloses limitation [10C]. Pet. 33–35. According to Petitioner, Steinbrecher discloses Microswitch M, preferably a reed switch, coupled to Charge Controller C, wherein Microswitch M connects Battery A to Electronics E under various magnetic field conditions comporting with the claim recitations. Pet. 33–35 (citing Ex. 1006, Fig. 2, ¶¶ 18–20, 25).

At this stage, Patent Owner does not allege any deficiencies in this aspect of Petitioner's showing. *See* Prelim. Resp. 21–23. Nonetheless, the burden remains on Petitioner to demonstrate unpatentability. *See Dynamic Drinkware*, 800 F.3d at 1378.

Petitioner's unrebutted assertions and explanations (Pet. 33–35) are consistent with and supported by the evidence cited by Petitioner. On this record, Petitioner has shown sufficiently that Steinbrecher discloses limitation [10C], i.e., "a reed switch connecting the battery to the circuitry, wherein the reed switch connects the circuitry to the battery when a

magnetic field is not detected, and wherein the reed switch disconnects the circuitry from the battery when a magnetic field is detected."

On this record, for purposes of this Decision, Petitioner has shown sufficiently that Steinbrecher discloses limitation [10C].

e) Preliminary Conclusion for Anticipation of Claim 10 by Steinbrecher

For the reasons provided above, Petitioner has sufficiently shown that Steinbrecher anticipates independent claim 10.

Accordingly, we are persuaded that Petitioner has shown a reasonable likelihood that it would prevail in establishing that the subject matter of claim 10 is anticipated by Steinbrecher.

1. Independent Claim 21[25]

a) [21Preamble]: "A system comprising:"

Petitioner contends Steinbrecher discloses the preamble. Pet. 35–36. According to Petitioner, Steinbrecher discloses a wireless earpiece system that includes a wireless earpiece, i.e., Hearing Aid H and a corresponding storage case, Charging Shell 1. Pet. 35–36 (citing Ex. 1006, Figs. 1, 2, ¶¶ 24–25).

At this stage, Patent Owner does not allege any deficiencies in this aspect of Petitioner's showing. *See* Prelim. Resp. 21–23.[26] Nonetheless, the

[25] Bracketing and parenthetical numbering of claim limitations in claim 21 are that adopted by Petitioner. *See* Pet. 35–42.

[26] At this stage, Patent Owner only alleges deficiencies in Petitioner's showing with respect to limitation [21E], discussed, *infra*. *See* Prelim. Resp. 21–23.

burden remains on Petitioner to demonstrate unpatentability. *See Dynamic Drinkware*, 800 F.3d at 1378.

Petitioner's assertions and explanations are consistent with and supported by the evidence cited by Petitioner. On this record, Petitioner has shown sufficiently that Steinbrecher discloses the claim's preamble.

b) [21A]: "a first wireless earpiece, comprising:"

Next, addressing the limitations recited in the body of the claim, Petitioner contends Steinbrecher discloses limitation [21A]. Pet. 36. According to Petitioner, Steinbrecher discloses a wireless earpiece system that includes a wireless earpiece, i.e., Hearing Aid H and a corresponding storage case, i.e., Charging Shell 1. Pet. 36 (referring to discussion above of Element [10Preamble] for claim 10, and Element [21Preamble].

At this stage, Patent Owner does not allege any deficiencies in this aspect of Petitioner's showing. *See* Prelim. Resp. 21–23. Nonetheless, the burden remains on Petitioner to demonstrate unpatentability. *See Dynamic Drinkware*, 800 F.3d at 1378.

Accordingly, at this stage of the proceeding, on this record, we find Petitioner's unrebutted assertions and explanations (Pet. 36) are consistent with and supported by the evidence cited by Petitioner with respect to limitation [21A], i.e., "a first wireless earpiece." On this record, for purposes of this Decision, Petitioner has shown sufficiently that Steinbrecher discloses limitation [21A].

c) [21B]: "circuitry operating the first wireless earpiece;"

Petitioner contends Steinbrecher discloses limitation [21B]. Pet. 36. According to Petitioner, the analysis for Element [10A] of claim 10 also pertains to limitation [21B] in claim 21. *Id.*

At this stage, Patent Owner does not allege any deficiencies in this aspect of Petitioner's showing. *See* Prelim. Resp. 21–23. Nonetheless, the burden remains on Petitioner to demonstrate unpatentability. *See Dynamic Drinkware*, 800 F.3d at 1378.

Accordingly, at this stage of the proceeding, on this record, we find Petitioner's unrebutted assertions and explanations (Pet. 36) are consistent with and supported by the evidence cited by Petitioner with respect to limitation [21B], i.e., "circuitry operating the first wireless earpiece." On this record, for purposes of this Decision, Petitioner has shown sufficiently that Steinbrecher discloses limitation [21B].

d) [21C]: "a battery powering the circuitry of the first wireless earpiece"

Petitioner contends Steinbrecher discloses limitation [21C]. Pet. 36. According to Petitioner, the analysis for Element [10B] (battery) of claim 10 also pertains to limitation [21C] of claim 21. *Id.*

At this stage, Patent Owner does not allege any deficiencies in this aspect of Petitioner's showing. *See* Prelim. Resp. 21–23. Nonetheless, the burden remains on Petitioner to demonstrate unpatentability. *See Dynamic Drinkware*, 800 F.3d at 1378.

Petitioner's unrebutted assertions and explanations (Pet. 36) are consistent with and supported by the evidence cited by Petitioner. On this

record, Petitioner has shown sufficiently that Steinbrecher discloses limitation [21C], i.e., "a battery powering the circuitry of the first wireless earpiece." On this record, for purposes of this Decision, Petitioner has shown sufficiently that Steinbrecher discloses limitation [21C].

e) [21D]: "a switch connecting the battery to the circuitry . . ."

Petitioner contends Steinbrecher discloses limitation [21D]. Pet. 37. According to Petitioner, the analyses for Elements [10B] (battery) and [10C] (magnetic reed switch) of claim 10 also pertain to limitation [21D] of claim 21 because Steinbrecher discloses Microswitch M, implemented as a reed switch. *Id*.

At this stage, Patent Owner does not allege any deficiencies in this aspect of Petitioner's showing. *See* Prelim. Resp. 21–23. Nonetheless, the burden remains on Petitioner to demonstrate unpatentability. *See Dynamic Drinkware*, 800 F.3d at 1378.

Accordingly, at this stage of the proceeding, on this record, we find Petitioner's unrebutted assertions and explanations (Pet. 37) are consistent with and supported by the evidence cited by Petitioner with respect to limitation [21D], i.e., "a switch connecting the battery to the circuitry, wherein the switch connects the circuitry to the battery when a magnetic field is not detected, and wherein the switch disconnects the circuitry from the battery when a magnetic field is detected." On this record, for purposes of this Decision, Petitioner has shown sufficiently that Steinbrecher discloses limitation [21D].

f) [21E]: "a smart case for charging the first wireless earpiece and a second wireless earpiece, the smart case comprising:"

Petitioner contends Steinbrecher discloses limitation [21E]. Pet. 37–38. According to Petitioner, Steinbrecher discloses a storage case, i.e., Charging Shell 1, which may be considered as a "smart case" because "it includes various intelligent controls such as a signal processing device that receives and displays information associated with battery A." Pet. 37 (citing Ex. 1006, Fig. 1, ¶¶ 7, 8, 24, 25). With reference to Figure 1, Petitioner also asserts that "Shaffer[27] further discloses that charging shell 1 (i.e., smart case) includes a pair of recesses 1.4 for charging the first wireless . . . and a second wireless earpiece." Pet. 38 (citing Ex. 1006, Fig. 1, ¶¶ 24).

Patent Owner allege deficiencies in this aspect of Petitioner's showing with respect to limitation [21E]. *See* Prelim. Resp. 21–23. Specifically, Patent Owner asserts "[w]hile Steinbrecher discloses a charging shell for holding and charging earpieces, Steinbrecher does not disclose 'a case comprising a rechargeable battery capable of being utilized to charge a wireless earpiece,' which, for the reasons discussed in Section IV.A [Claim Construction section of the Preliminary Response], is the proper construction of 'smart case' as used in the Challenged Claims." Prelim. Resp. 21–22. "No embodiment of Steinbrecher discloses that the charging shell comprises a battery, much less a 'rechargeable battery capable of being utilized to charge a wireless earpiece.' Therefore, Steinbrecher does not anticipate Claim 21 as properly construed." *Id.* at 23.

---

[27] Petitioner's citations to Ex. 1006 and element 1.4 of Fig. 1 indicate that the reference to Shaffer is a typographical error, and Petitioner is discussing Steinbrecher, not Shaffer.

Although claim 21 does not recite a rechargeable battery contained in the so-called "smart case," Patent Owner has applied the claim construction for "smart case" that we preliminarily declined to adopt, in which Patent Owner advocates for a requirement that the "smart case" necessarily contain a rechargeable battery. For the claim construction reasons discussed above, on this record, we disagree with Patent Owner's arguments. *See* § III.D.1, *supra*.

Nonetheless, we remind the parties that the burden remains on Petitioner to demonstrate unpatentability. *See Dynamic Drinkware*, 800 F.3d at 1378.

We remind the parties that the findings and conclusions in this Decision are preliminary, and do not preclude the parties from arguing proposed constructions of the claims during trial because claim construction, in general, is an issue to be addressed at trial. Claim construction will be determined at the close of all the evidence and after any hearing. As mentioned above, the parties are expected to assert all their claim construction arguments and evidence in their respective briefing as permitted by our rules.

Accordingly, at this stage of the proceeding, on this record, we find Petitioner's assertions and explanations (Pet. 37–38) are consistent with and supported by the evidence cited by Petitioner with respect to limitation [21E], i.e., "a smart case for charging the first wireless earpiece and a second wireless earpiece," and Patent Owner does not provide persuasive rebuttal regarding this limitation. On this record, for purposes of this Decision, Petitioner has shown sufficiently that Steinbrecher discloses limitation [21E].

g) [21F]: "a smart case housing;"

Petitioner contends Steinbrecher discloses limitation [21F]. Pet. 39. According to Petitioner, Figure 1 of Steinbrecher discloses a smart case including a smart case housing in the form of Charging Shell 1 with bottom housing 1.1. *Id.* (citing Ex. 1006, Fig. 1, ¶ 24).

At this stage, Patent Owner does not allege any deficiencies in this aspect of Petitioner's showing. *See* Prelim. Resp. 21–23. Nonetheless, the burden remains on Petitioner to demonstrate unpatentability. *See Dynamic Drinkware*, 800 F.3d at 1378.

Accordingly, at this stage of the proceeding, on this record, we find Petitioner's unrebutted assertions and explanations (Pet. 39) are consistent with and supported by the evidence cited by Petitioner with respect to limitation [21F], i.e., "a smart case housing." On this record, for purposes of this Decision, Petitioner has shown sufficiently that Steinbrecher discloses limitation [21F].

h) [21G]: "a first receptacle for receiving the first wireless earpiece disposed within the smart case housing" and [21H]: "second receptacle for receiving the second wireless earpiece disposed within the smart case housing"

Petitioner contends Steinbrecher discloses limitations [21G] and [21H]. Pet. 39. According to Petitioner, with reference to annotated Figure 1 of Steinbrecher (*see* Pet. 39), Charging Shell 1 "includes a first receptacle (red box) and a second receptacle (green box) for receiving the left and right earpieces, respectively, where both receptacles are disposed within the smart case housing." *Id.*

At this stage, Patent Owner does not allege any deficiencies in this aspect of Petitioner's showing. *See* Prelim. Resp. 21–23. Nonetheless, the

burden remains on Petitioner to demonstrate unpatentability. *See Dynamic Drinkware*, 800 F.3d at 1378.

Accordingly, at this stage of the proceeding, on this record, we find Petitioner's unrebutted assertions and explanations (Pet. 39) are consistent with and supported by the evidence cited by Petitioner with respect to limitations [21G] and [21H]. On this record, for purposes of this Decision, Petitioner has shown sufficiently that Steinbrecher discloses limitation [21G] and [21H].

i) [21I]: "a first interface associated with the first receptacle for electrically connecting the smart case to the first earpiece;" and [21J]: "a second interface associated with the second receptacle for electrically connecting the smart case to the second earpiece;"

Petitioner contends Steinbrecher discloses limitations [21I] and [21J]. Pet. 40–41. According to Petitioner, with reference to annotated Figure 1 of Steinbrecher (*see* Pet. 40), "Steinbrecher's smart case (e.g., charging shell 1) includes first and second interfaces (e.g., energy transmission devices) associated with the first and second receptacles (e.g., recesses 1.4, shown in red and green boxes) for electrically connecting the smart case to the left and right earpieces, respectively." *Id*.

At this stage, Patent Owner does not allege any deficiencies in this aspect of Petitioner's showing. *See* Prelim. Resp. 21–23. Nonetheless, the burden remains on Petitioner to demonstrate unpatentability. *See Dynamic Drinkware*, 800 F.3d at 1378.

Accordingly, at this stage of the proceeding, on this record, we find Petitioner's unrebutted assertions and explanations (Pet. 40–41) are consistent with and supported by the evidence cited by Petitioner with respect to limitations [21I] and [21J]. On this record, for purposes of this

Decision, Petitioner has shown sufficiently that Steinbrecher discloses limitation [21I] and [21J].

j) [21K]: "an intelligent control disposed within the smart case housing and operatively connected to the first interface and the second interface."

Petitioner contends Steinbrecher discloses limitation [21K]. Pet. 41–42. According to Petitioner, with reference to the explanation above of how limitation [21E] is disclosed by Steinbrecher, Petitioner argues "Steinbrecher's charging shell 1 is a smart case that includes intelligent controls (e.g., a signal processing device) disposed within the smart case housing." Pet. 41 (citing Ex. 1006, ¶ 7). "Steinbrecher further discloses that the intelligent control (e.g., signal processing device) is operatively coupled to the first and second interfaces (e.g., energy transmission devices), as data (e.g., charge state information) reaches the signal processing device from the hearing device via a signal path that includes the energy transmission devices." *Id.* (citing Ex. 1006, ¶¶ 8, 9, 24, 25).

At this stage, Patent Owner does not allege any deficiencies in this aspect of Petitioner's showing. *See* Prelim. Resp. 21–23. Nonetheless, the burden remains on Petitioner to demonstrate unpatentability. *See Dynamic Drinkware*, 800 F.3d at 1378.

Accordingly, at this stage of the proceeding, on this record, we find Petitioner's unrebutted assertions and explanations (Pet. 41–42) are consistent with and supported by the evidence cited by Petitioner with respect to limitation [21K], i.e., "an intelligent control disposed within the smart case housing and operatively connected to the first interface and the second interface." On this record, for purposes of this Decision, Petitioner has shown sufficiently that Steinbrecher discloses limitation [21K].

k) Preliminary Conclusion for Anticipation of Claim 21 by Steinbrecher

For the reasons provided above, Petitioner has sufficiently shown that Steinbrecher anticipates independent claim 21. We have considered Patent Owner's arguments that Petitioner's arguments are insufficient with respect to limitation [21E] and, at this stage, on this record, we disagree.

Accordingly, we are persuaded that Petitioner has shown a reasonable likelihood that it would prevail in establishing that the subject matter of claim 21 is anticipated by Steinbrecher.

l) Ground 3: Summary

In light of the above analysis, we preliminarily determine that Petitioner's evidence and arguments are sufficient to demonstrate a reasonable likelihood of success in its challenges to claims 10 and 21 under Ground 3, anticipation by Steinbrecher.

I. Ground 4: Alleged Obviousness of Claims 1–7 and 9 Under § 103 over Shaffer[28] and Hain

Under Ground 4, Petitioner contends claims 1–7 and 9 are unpatentable under § 103 as obvious over Shaffer and Hain. *See* Pet. 42–64. Patent Owner disputes Petitioner's contentions. *See* Prelim. Resp. 23–28.

With respect to ***Grounds 4–7***, Patent Owner argues the Shaffer reference was presented to the Office and considered by the Examiner during prosecution, and Petitioner has not shown that the Examiner

[28] *See* Pet. 5–6 (stating that Shaffer is prior art under 35 U.S.C. § 102(a)(1) and (2)). Patent Owner takes issue with Petitioner's general statement that Shaffer qualifies as prior art to the '853 patent under § 102(a)(1) and (2) because Shaffer was considered by the Examiner during prosecution. *See* Prelim. Resp. 23–27.

committed material error in the examination of the ’853 patent. Prelim. Resp. 23–27. As discussed above, Patent Owner urges the Board to exercise discretionary denial of the Petition under 35 U.S.C. § 325(d), because “Shaffer should not be considered prior art. . . . [And, a]s a result, Grounds 4–7 must fail.” Prelim. Resp. 27.

For the reasons discussed above, we decline to exercise our discretionary denial authority under § 325(d). *See* § III.A, *supra*.

As for Grounds 4 and 5 specifically, Patent Owner alleges that Hain does not disclose “powering circuitry” limitation [1A] and “altering the power” limitation [1B] of claim 1, as discussed in more detail below.

We provided overviews of Shaffer and Hain, above. Below, we consider the obviousness issues. As explained below, Petitioner establishes sufficiently for purposes of institution that the combined disclosures in Shaffer and Hain teach or suggest the subject matter in claims 1–7 and 9 under Ground 4.

1. Independent Claim 1

a) [1Preamble]: “A method for managing wireless earpieces, comprising:”

Petitioner contends Shaffer teaches the preamble. Pet. 42–44. According to Petitioner, “Shaffer’s system carries out a method to manage earbuds 1010 and 1012, e.g., by detecting whether the earbuds are placed in the magnetic storage case and automatically powering down the earbud circuitry when the earbuds are in the case.” Pet. 44 (citing Ex. 103, Fig. 10, ¶¶ 11, 62–63).

At this stage, other than argue for discretionary denial under § 325(d), Patent Owner does not allege any deficiencies in this aspect of Petitioner’s

showing. *See* Prelim. Resp. 27–28. Nonetheless, the burden remains on Petitioner to demonstrate unpatentability. *See Dynamic Drinkware*, 800 F.3d at 1378.

Petitioner's assertions and explanations are consistent with and supported by the evidence cited by Petitioner. On this record, Petitioner has shown sufficiently that Shaffer teaches the claim's preamble.[29]

b) [1A]: "powering circuitry of the wireless earpieces utilizing a high power mode"
[1B]: "altering the power sent to the circuitry of the wireless earpieces to a low power mode"

Next, addressing the limitations recited in the body of the claim, Petitioner contends Shaffer and Hain teach limitations [1A] and [1B]. Pet. 45–53. According to Petitioner, with reference to limitation [1A], "Shaffer's earbuds 1010 and 1012 include circuitry (e.g., PCB 3 and PCB 4) that, under normal operation, is powered using a high-power mode (e.g., the earbuds are fully functional and powered by rechargeable batteries 1030 and 1036)." *Id.* at 45. In addition, "Shaffer discloses that the PCB circuitry is powered on (i.e., using the high-power mode) in response to a magnetic sensor detecting that the earbud is out of its storage case." *Id.* (citing Ex. 1003, ¶¶ 62–63).

Adopting the analysis provided for elements [1A] and [1B] with respect to claim 1, Ground 2 (*see* §§ III.G.1.b) and c), *supra*), Petitioner

[29] We need not determine whether the preamble is limiting because Petitioner has sufficiently shown that Shaffer discloses this aspect of the claim, despite Patent Owner's objection to Shaffer being considered prior art, a position we do not adopt at this stage of the proceeding. *See Vivid Techs.*, 200 F.3d at 803; *see generally* Prelim. Resp.

relies upon Hain for teaching "a magnetic sensor (e.g., reed contacts 6 and 16) that determines that an earbud is out of its storage case by detecting that a magnetic field is not applied to the earpieces." *Id*. at 47.

Specifically, with respect to limitation [1B], Petitioner contends "Shaffer discloses altering the power sent to the circuitry of the wireless earpieces (e.g., earbuds 1010 and 1012) to a low-power mode (e.g., 'low energy consumption idle mode') in response to a magnetic sensor detecting that the earpieces are in their storage case." Pet. 50 (citing Ex. 1003, ¶ 63).

At this stage, Patent Owner alleges deficiencies in this aspect of Petitioner's showing by relying upon arguments presented with respect to Ground 2, claim 1, limitations [1A] and [1B]. *See* Prelim. Resp. 27–28 (citing Prelim. Resp. § V.B.1). However, at this stage of the proceeding, on this record, and as indicated above, we are not persuaded by Patent Owner's arguments. *See* §§ III.G.1.b) and c), *supra*.

Nonetheless, we remind the parties that the burden remains on Petitioner to demonstrate unpatentability. *See Dynamic Drinkware*, 800 F.3d at 1378.

Accordingly, at this stage of the proceeding, on this record, we find Petitioner's assertions and explanations (Pet. 45–53) are consistent with and supported by the evidence cited by Petitioner with respect to limitation [1A], i.e., "powering circuitry of the wireless earpieces utilizing a high power mode in response to detecting a magnetic field is not applied to one or more of the wireless earpieces," and limitation [1B], i.e., "altering the power sent to the circuitry of the wireless earpieces to a low power mode in response to detecting a magnetic field is applied to one or more of the wireless earpieces." On this record, for purposes of this Decision, Petitioner has

shown sufficiently that the combination of Shaffer and Hain teach limitations [1A] and [1B].

c) Alleged Reasons for Combining the Teachings of Shaffer and Hain

Petitioner identifies reasons that would have prompted an ordinarily skilled artisan to combine Shaffer's teachings with Hain's teachings in the way Petitioner proposes. *See* Pet. 47–49 (citing Ex. 1002 ¶¶ 85–89).

At this stage, Patent Owner does not allege any deficiencies in this aspect of Petitioner's showing. *See* Prelim. Resp. 27–28.

d) Preliminary Conclusion for Ground 5: Obviousness of Claim 1 in view of Shaffer and Hain

As discussed above, Petitioner's analysis addresses how the combined disclosures in Shaffer and Hain teach claim 1's subject matter. Additionally, Petitioner provides a reason with rational underpinning as to why an ordinarily skilled artisan would have been motivated to combine Shaffer's teachings with Hain's teachings in the way Petitioner proposes and would have had a reasonable expectation of success. Hence, Petitioner demonstrates a reasonable likelihood of prevailing in proving that claim 1 would have been obvious over Shaffer and Hain.

2. Dependent Claims 2–7 and 9

Claims 2–7 and 9 depend directly from claim 1. Ex. 1001, 10:64–11:17, 11:21–22.

For claims 2–7 and 9, Petitioner provides an analysis supported by Dr. Kiaei's testimony about how the combined disclosures in Shaffer and Hain teach the claimed subject matter. *See* Pet. 53–64; Ex. 1002 ¶¶ 95–108.

At this stage of the proceeding, Patent Owner makes no arguments specific to claims 2–7 and 9. *See, e.g.*, Prelim. Resp. 23–28. Nonetheless, the burden remains on Petitioner to demonstrate unpatentability. *See Dynamic Drinkware*, 800 F.3d at 1378.

Based on the current record and for the reasons advanced by Petitioner, supported by Dr. Kiaei's testimony, Petitioner establishes sufficiently that the combined disclosures in Shaffer and Hain teach the subject matter in claims 2–7 and 9. *See* Pet. 53–64; Ex. 1002 ¶¶ 95–98. Hence, Petitioner demonstrates a reasonable likelihood of prevailing in proving that claims 2–7 and 9 would have been obvious over the combination of Shaffer and Hain.

3. Ground 4: Conclusion

In light of the above analysis, we preliminarily determine that Petitioner's evidence and arguments are sufficient to demonstrate a reasonable likelihood of success in its challenges to claims 1–7 and 9 under Ground 4, obviousness over the combination of Shaffer and Hain.

J. Ground 5: Alleged Obviousness of Claims 4 and 6–8 Under § 103 over Shaffer, Hain, and Sørensen[30]

Petitioner contends claims 4 and 6–8 are unpatentable under § 103 as obvious over the combination of Shaffer, Hain, and Sørensen. *See* Pet. 64–69. Claims 4 and 6–8 depend directly from claim 1. Ex. 1001, 11:5–7, 11:10–20.

---

[30] *See* Pet. 5–6 (stating that Sørensen is prior art under 35 U.S.C. § 102(a)(1) and (2)). Patent Owner does not take issue with Petitioner's general statement that Sørensen qualifies as prior art to the '853 patent under § 102(a)(1) and (2). *See generally*, Prelim. Resp.

Patent Owner generally disputes Petitioner's contentions, but makes no arguments specific to dependent claims 4 and 6–8 under Ground 5. *See* Prelim. Resp. 27–28.

Instead, with respect to obviousness ***Grounds 4–7***, discussed above in connection with Patent Owner's request for discretionary denial under § 325(d), Patent Owner argues the Examiner did not commit a material error, the Shaffer reference was presented to the Office and considered by the Examiner during prosecution, and Petitioner has not shown error in the Examination of the '853 patent. Prelim. Resp. 23–27. In this context, Patent Owner urges the Board to exercise discretionary denial of the Petition under 35 U.S.C. § 325(d), because "Shaffer should not be considered prior art. . . . [And, a]s a result, Grounds 4–7 must fail." Prelim. Resp. 27.

For the reasons discussed above, we decline to exercise our discretionary denial authority under § 325(d) and, at this stage of the proceeding, we consider Shaffer to be prior art to the invention claimed in the '853 patent. *See* § III.A, *supra*.

As for Grounds 4 and 5 specifically, Patent Owner alleges that Hain does not disclose "powering circuitry" limitation [1A] of claim 1 and "altering the power" limitation [1B] of claim 1, as discussed in more detail above. *See* Prelim. Resp. 27–28. We have previously provided overviews of Shaffer, Hain, and Sørensen. *See* §§ III.E.2), 4), and 5), *supra*. Below, we consider the obviousness issues. Patent Owner does not provide any additional arguments directed to anything other than independent claim 1.

For Ground 5, supported by Dr. Kiaei's testimony, Petitioner sets forth specific unrebutted findings and legal conclusions regarding how each of dependent claims 4 and 6–8 read on the combined disclosures of Shaffer, Hain, and Sørensen. Pet. 64–69; *and see* Ex. 1002, ¶¶ 110-118. We have

already addressed Hain's disclosure of limitations [1A] and [1B] in claim 1 above, in connection with Ground 2, claim 1. *See* §§ III.G.1.

As explained above, Petitioner establishes sufficiently for purposes of institution that the combined disclosures in Shaffer and Hain teach or suggest the subject matter in claims 4 and 6–8 under Ground 5.

K. Ground 6: Alleged Obviousness of Claims 10–12, 14, and 16–21 Under § 103 over Shaffer and Steinbrecher

Petitioner contends claims 10–12, 14, and 16–21 are unpatentable under § 103 as obvious over Shaffer and Steinbrecher. *See* Pet. 69–91. At this stage of the proceeding, Patent Owner generally disputes Petitioner's contentions, but only to the extent of continuing to argue that Shaffer should not be considered prior art for purposes of institution. *See* Prelim. Resp. 23–27. We have already addressed why, at this stage, discretionary denial is not appropriate, such that Shaffer remains as prior art to the claimed invention. *See* §§ III.A, *supra*.

Above, we provided overviews of Shaffer and Steinbrecher. Below, we consider the obviousness issues. As explained below, Petitioner establishes sufficiently for purposes of institution that the combined disclosures in Shaffer and Steinbrecher teach the subject matter in claims 10–12, 14, and 16–21.

For Ground 6, supported by Dr. Kiaei's testimony, Petitioner sets forth specific detailed and unrebutted findings and legal conclusions regarding how each limitation of claims 10–12, 14, and 16–21 reads on the combined disclosures of Shaffer, and Steinbrecher, and why a person of ordinary skill in the art would combine the references in the manner suggested. Pet. 69–91; *and see* Ex. 1002, ¶¶ 119–150.

As explained above, Petitioner establishes sufficiently for purposes of institution that the combined disclosures in Shaffer and Hain teach or suggest the subject matter in claims 10–12, 14, and 16–21 under Ground 6.

As discussed above, Petitioner's analysis addresses how the combined disclosures in Shaffer and Steinbrecher variously teach the subject matter of claims 10–12, 14, and 16–21. Additionally, Petitioner provides a reason with rational underpinning as to why an ordinarily skilled artisan would have been motivated to combine Shaffer's teachings with Steinbrecher's teachings in the way Petitioner proposes and would have had a reasonable expectation of success. Pet. 73–76. Hence, Petitioner demonstrates a reasonable likelihood of prevailing in proving that claims 10–12, 14, and 16–21 would have been obvious over the combination of Shaffer and Steinbrecher.

L. Ground 7: Alleged Obviousness of Claims 11–13, 15, and 17–21 Under § 103 over Shaffer, Steinbrecher, and Sørensen

Petitioner contends claims 11–13, 15, and 17–21 are unpatentable under § 103 as obvious over Shaffer, Steinbrecher, and Sørensen. *See* Pet. 91–92. At this stage of the proceeding, Patent Owner generally disputes Petitioner's contentions, but only to the extent of continuing to argue that Shaffer should not be considered prior art for purposes of institution. *See* Prelim. Resp. 23–27. We have already addressed why, at this stage, discretionary denial is not appropriate, such that Shaffer remains as prior art to the claimed invention. *See* §§ III.A, *supra*.

Claims 11–13, 15, and 17–20 depend directly or indirectly from claim 10. Ex. 1001, 11:32–41, 11:45–47, 12:1–25. Claim 21 is independent. Ex. 1001, 12:26–51.

Above, we provided overviews of Shaffer, Steinbrecher, and Sørensen. For claims 11–13, 15, and 17–21 under Ground 7, supported by Dr. Kiaei's testimony, Petitioner sets forth specific detailed and unrebutted findings and legal conclusions regarding how each limitation of claims 11–13, 15, and 17–21 reads on the combined disclosures of Shaffer, Steinbrecher, and Sørensen, and why a person of ordinary skill in the art would combine the references in the manner suggested. Pet. 91–92; *and see* Ex. 1002, ¶¶ 151–155.

As explained above, Petitioner establishes sufficiently for purposes of institution that the combined disclosures in Shaffer, Steinbrecher, and Sørensen teach or suggest the subject matter in claims 11–13, 15, and 17–21 under Ground 7.

Petitioner's analysis addresses how the combined disclosures in Shaffer, Steinbrecher, and Sørensen variously teach the subject matter of claims 11–13, 15, and 17–21. Additionally, Petitioner provides a reason with rational underpinning as to why an ordinarily skilled artisan would have been motivated to combine Shaffer's teachings with Steinbrecher's teachings in the way Petitioner proposes and would have had a reasonable expectation of success. Pet. 92 (citing Ex. 1002 ¶¶ 154–155). Hence, Petitioner demonstrates a reasonable likelihood of prevailing in proving that claims 11–13, 15, and 17–21 would have been obvious over the combination of Shaffer, Steinbrecher, and Sørensen.

At this stage of the proceeding, Patent Owner makes no arguments specific to claims 11–13, 15, and 17–21. *See, generally*, Prelim. Resp. Nonetheless, the burden remains on Petitioner to demonstrate unpatentability. *See Dynamic Drinkware*, 800 F.3d at 1378.

Based on the current record and for the reasons advanced by Petitioner and supported by Dr. Kiaei's testimony, cited above, Petitioner establishes sufficiently that the combined disclosures in Shaffer, Steinbrecher, and Sørensen teach the subject matter in claims 11–13, 15, and 17–21. Hence, Petitioner demonstrates a reasonable likelihood of prevailing in proving that claims 11–13, 15, and 17–21 would have been obvious over Shaffer, Steinbrecher, and Sørensen.

IV. CONCLUSION

As explained above, we determine that Petitioner has established a reasonable likelihood of prevailing in its challenge to at least one claim of the '853 patent. Hence, we institute an *inter partes* review of all challenged claims on all challenges included in the Petition. *See SAS Inst. Inc. v. Iancu*, 138 S. Ct. 1348, 1355 (2018) (noting that the language of 35 U.S.C. § 314(b) "indicates a binary choice—either institute review or don't"); *see also PGS Geophysical AS v. Iancu*, 891 F.3d 1354, 1360 (Fed. Cir. 2018) (interpreting the statute as requiring "a simple yes-or-no institution choice respecting a petition, embracing all challenges included in the petition").

Our factual findings, conclusions of law, and determinations at this stage of the proceeding are preliminary, and based on the evidentiary record developed thus far. Our final decision as to the patentability of challenged claims will be based on the record developed during trial, including any response timely filed by Patent Owner. Any arguments not raised by Patent Owner in a timely filed response may be deemed waived.

V. ORDER

It is:

ORDERED that, pursuant to 35 U.S.C. § 314(a), an *inter partes* review is instituted on all of the challenged claims, i.e., claims 1–21 of the ’853 patent, on all corresponding grounds of unpatentability as specified in the Petition and identified in the Table in Section II.E. of this Decision; and

FURTHER ORDERED that pursuant to 35 U.S.C. § 314(c) and 37 C.F.R. § 42.4(b), *inter partes* review of the ’853 patent shall commence on the entry date of this Decision, and notice is hereby given of the institution of a trial.

FOR PETITIONER:

Haixia Lin
Brian Lambson
Trishan Esram
WILMER CUTLER PICKERING HALE AND DORR LLP
haixia.lin@wilmerhale.com
brian.lambson@wilmerhale.com
trishan.esram@wilmerhale.com

FOR PATENT OWNER:

Casey Shomaker
Richard A. Kamprath
MCKOOL SMITH, P.C.
cshomaker@mckoolsmith.com
rkamprath@mckoolsmith.com