US008880889B1

(12) **United States Patent**
Ward et al.

(10) **Patent No.: US 8,880,889 B1**
(45) **Date of Patent: Nov. 4, 2014**

(54) **SYSTEMS AND METHODS FOR REMOTE AUTHORIZATION OF FINANCIAL TRANSACTIONS USING PUBLIC KEY INFRASTRUCTURE (PKI)**

(75) Inventors: **Hilary Ward**, Princeton Junction, NJ (US); **Gary E. Greenwald**, Briarcliff Manor, NY (US); **Francis A. Shanahan**, Watchung, NJ (US)

(73) Assignee: **Citigroup Global Markets, Inc.**, New York, NY (US)

(*) Notice: Subject to any disclaimer, the term of this patent is extended or adjusted under 35 U.S.C. 154(b) by 952 days.

(21) Appl. No.: **12/041,425**

(22) Filed: **Mar. 3, 2008**

Related U.S. Application Data

(60) Provisional application No. 60/904,677, filed on Mar. 2, 2007.

(51) **Int. Cl.**
G06F 21/00 (2013.01)

(52) **U.S. Cl.**
USPC **713/176**; 705/67

(58) **Field of Classification Search**
USPC 713/176; 705/67
See application file for complete search history.

(56) **References Cited**

U.S. PATENT DOCUMENTS

6,978,364	B1	12/2005	Balaz et al.	
7,083,090	B2 *	8/2006	Zuili	235/383
7,392,533	B2	6/2008	Ternasky et al.	
7,448,080	B2	11/2008	Karjala et al.	
7,454,376	B1	11/2008	Argenbright	
7,500,097	B2	3/2009	Kostal et al.	
7,509,489	B2	3/2009	Kostal et al.	
7,580,857	B2 *	8/2009	VanFleet et al.	705/14.41
7,610,484	B2	10/2009	Kapoor	
7,739,195	B2	6/2010	Polk et al.	
7,761,374	B2 *	7/2010	Sahota et al.	705/39
2002/0062342	A1	5/2002	Sidles	
2003/0191703	A1	10/2003	Chen et al.	
2003/0217264	A1 *	11/2003	Martin et al.	713/156
2004/0044621	A1	3/2004	Huang et al.	
2004/0107170	A1 *	6/2004	Labrou et al.	705/64
2004/0122685	A1 *	6/2004	Bunce	705/1
2004/0128392	A1	7/2004	Blakley et al.	
2005/0102240	A1 *	5/2005	Misra et al.	705/59
2005/0120125	A1	6/2005	Morten et al.	
2006/0077437	A1 *	4/2006	Lovat et al.	358/1.15
2006/0143107	A1	6/2006	Dumas et al.	
2006/0195816	A1	8/2006	Grandcolas et al.	

(Continued)

FOREIGN PATENT DOCUMENTS

WO WO 02/31718 * 4/2002

OTHER PUBLICATIONS

U.S. Appl. No. 11/981,177, filed Oct. 30, 2007.
U.S. Appl. No. 12/049,086, filed Mar. 14, 2008.

(Continued)

Primary Examiner — Kambiz Zand
Assistant Examiner — Ali Shayanfar
(74) *Attorney, Agent, or Firm* — Ropes & Gray LLP

(57) **ABSTRACT**

The invention relates to systems and methods for secure, remote, wireless submission of financial transactions. Authentication and authorization functionality are provided through use of proof of possession tests, a token service that provides a user device with a token that includes user entitlement data, and high assurance digital certificates.

35 Claims, 8 Drawing Sheets

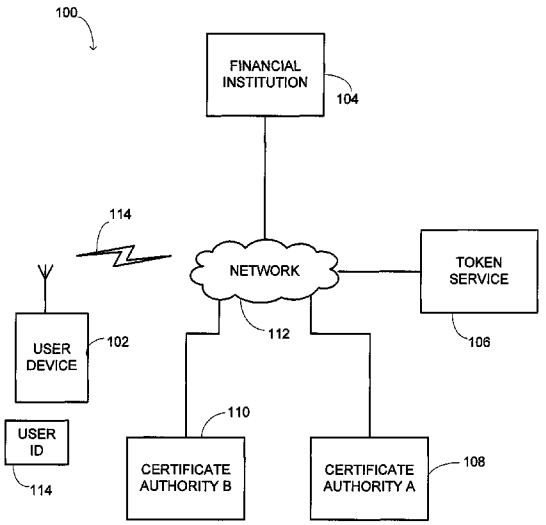

(56) **References Cited**

U.S. PATENT DOCUMENTS

2006/0282528	A1*	12/2006	Madams et al.	709/224
2007/0022469	A1	1/2007	Cooper et al.	
2007/0112578	A1	5/2007	Randle et al.	
2007/0136197	A1*	6/2007	Morris	705/44
2007/0179885	A1*	8/2007	Bird et al.	705/39
2007/0215683	A1	9/2007	Koorland et al.	
2007/0288750	A1*	12/2007	Camenisch et al.	713/168

OTHER PUBLICATIONS

Bank of America PayMode. (2004) Retrieved from http://corp.bankofamerica.com/public/portal?_pd_page_label=paymode/services/security on Dec. 29, 2008.
Non-Final OA issued Jan. 6, 2011 in U.S. Appl. No. 11/981,177.
Non-Final OA issued Apr. 19, 2011 in U.S. Appl. No. 12/049,086.
Final OA issued Jan. 6, 2012 in U.S. Appl. No. 12/049,086.
Non-Final OA issued Jul. 25, 2012 in U.S. Appl. No. 12/049,086.

* cited by examiner

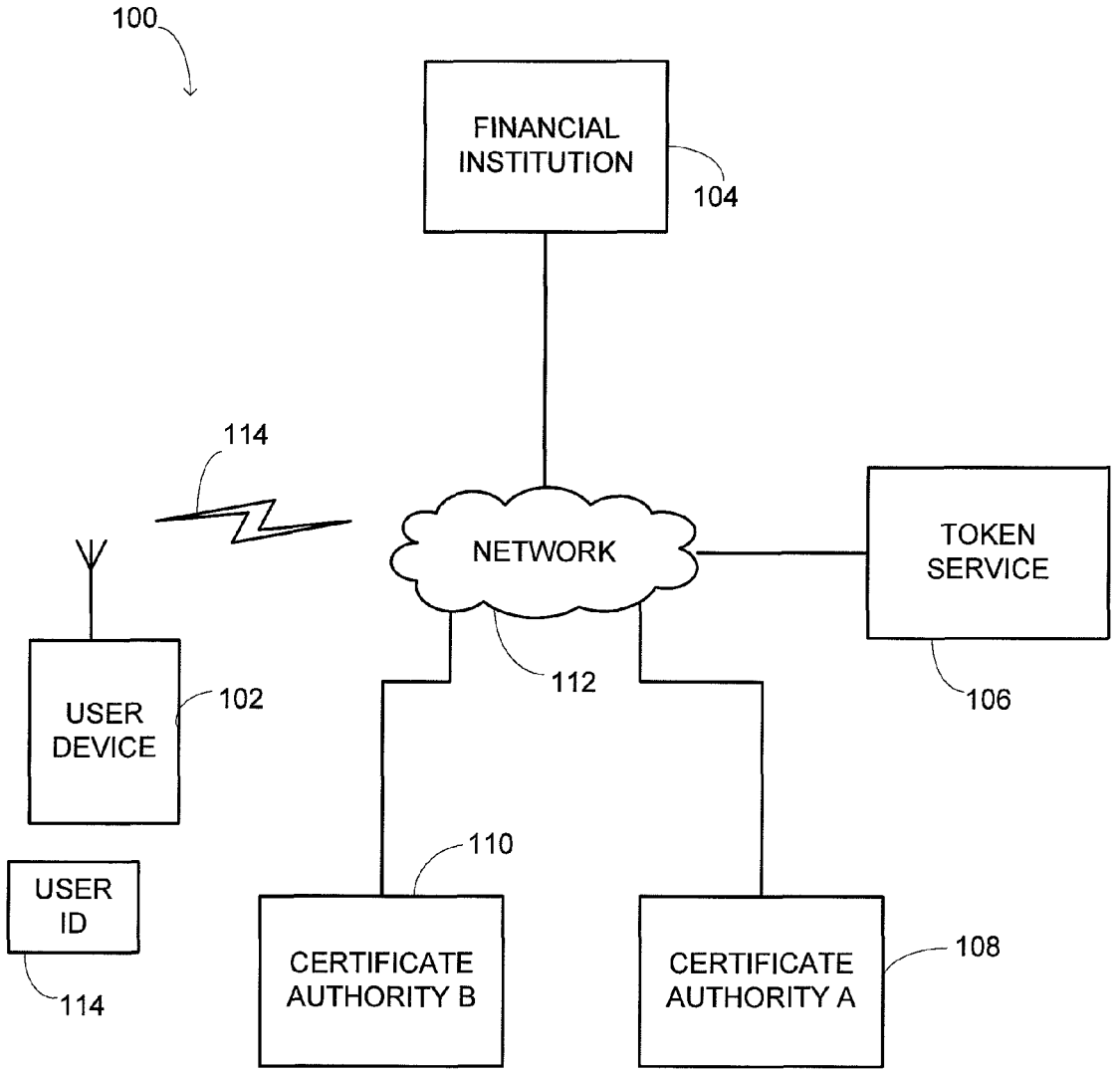
100
FINANCIAL INSTITUTION
104
114
NETWORK
TOKEN SERVICE
USER DEVICE
102
112
106
110
USER ID
114
CERTIFICATE AUTHORITY B
CERTIFICATE AUTHORITY A
108

FIGURE 1

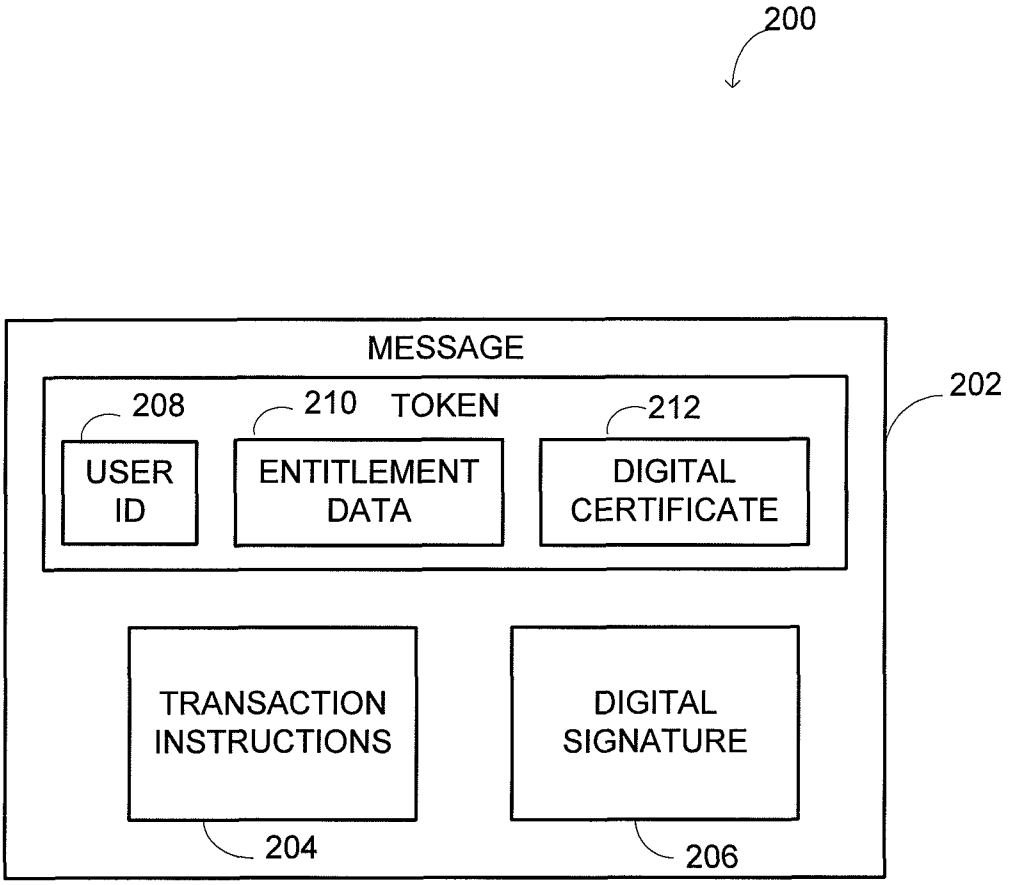
200
MESSAGE
202
208
210
TOKEN
212
USER ID
ENTITLEMENT DATA
DIGITAL CERTIFICATE
TRANSACTION INSTRUCTIONS
DIGITAL SIGNATURE
204
206

FIGURE 2

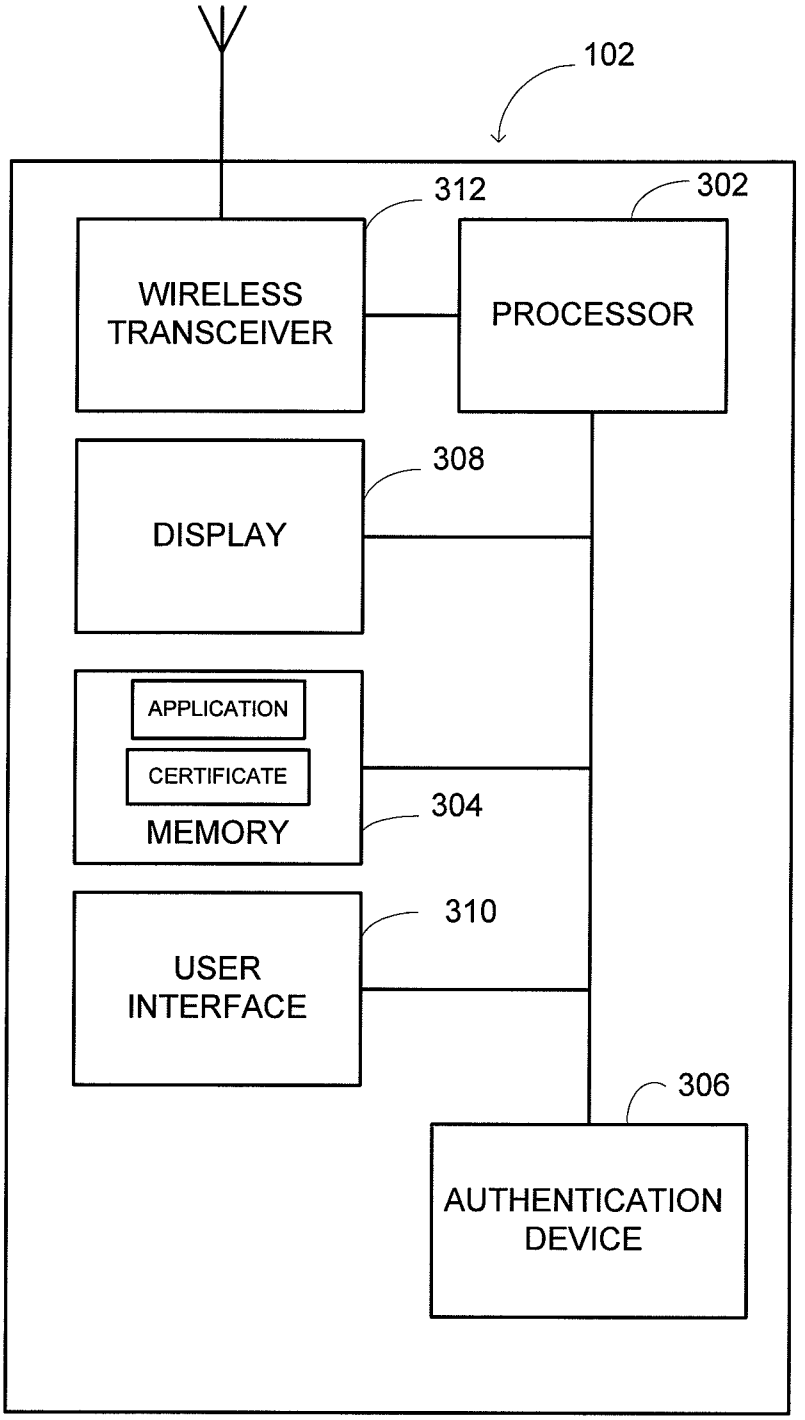
102
312
302
WIRELESS TRANSCEIVER
PROCESSOR
308
DISPLAY
APPLICATION
CERTIFICATE
MEMORY
304
310
USER INTERFACE
306
AUTHENTICATION DEVICE

FIGURE 3

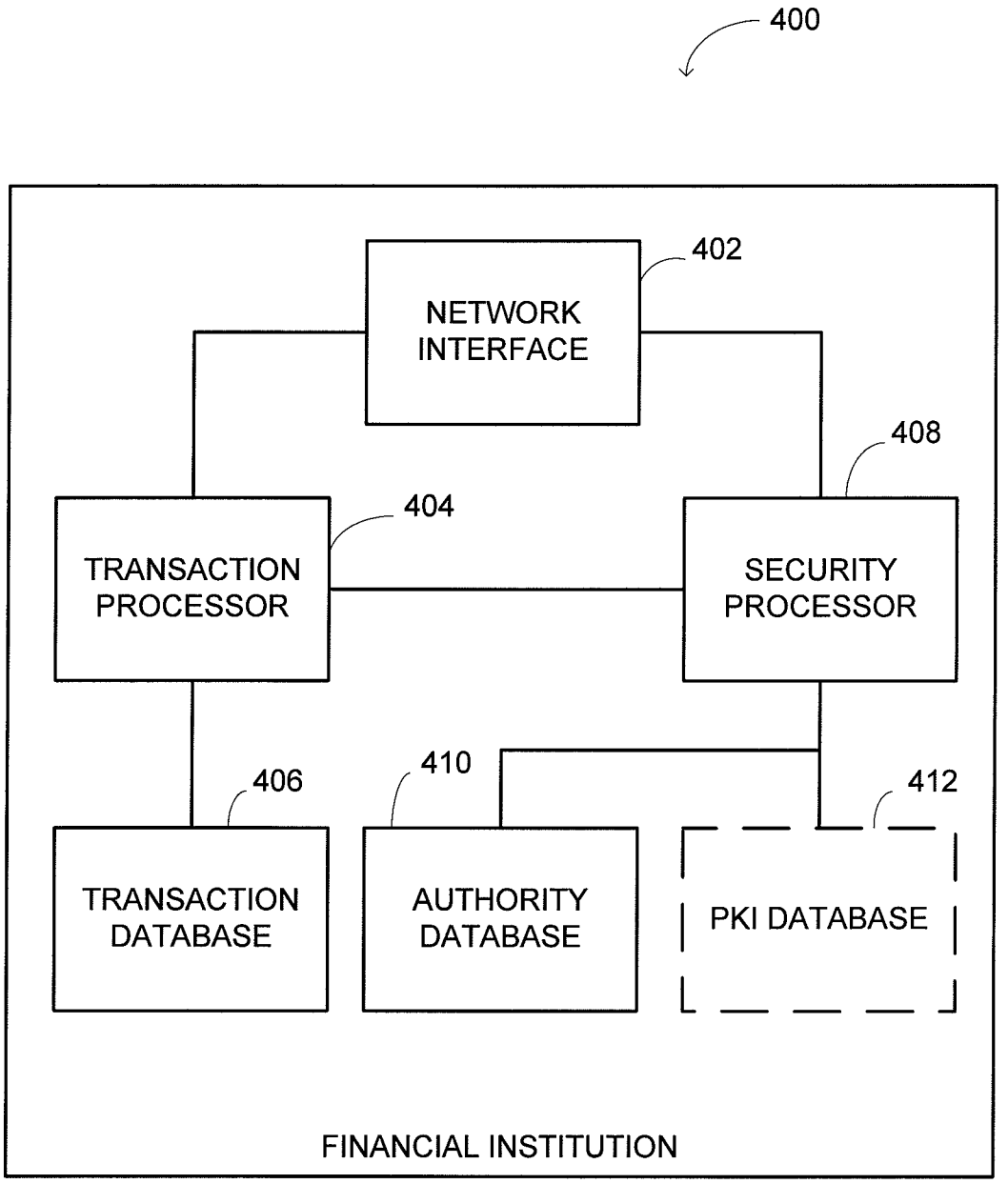
400
402
NETWORK INTERFACE
408
404
TRANSACTION PROCESSOR
SECURITY PROCESSOR
406
410
412
TRANSACTION DATABASE
AUTHORITY DATABASE
PKI DATABASE
FINANCIAL INSTITUTION

FIGURE 4

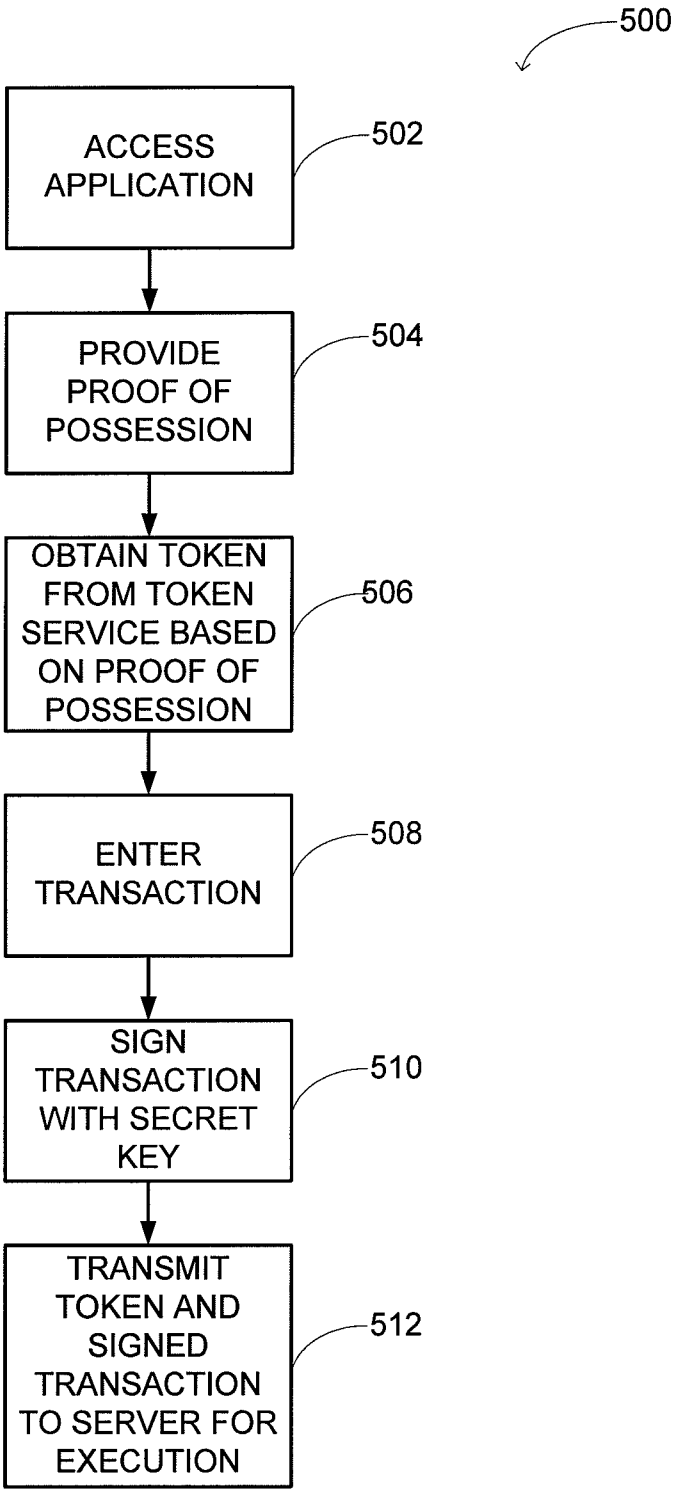
500
ACCESS APPLICATION
502
PROVIDE PROOF OF POSSESSION
504
OBTAIN TOKEN FROM TOKEN SERVICE BASED ON PROOF OF POSSESSION
506
ENTER TRANSACTION
508
SIGN TRANSACTION WITH SECRET KEY
510
TRANSMIT TOKEN AND SIGNED TRANSACTION TO SERVER FOR EXECUTION
512

FIGURE 5

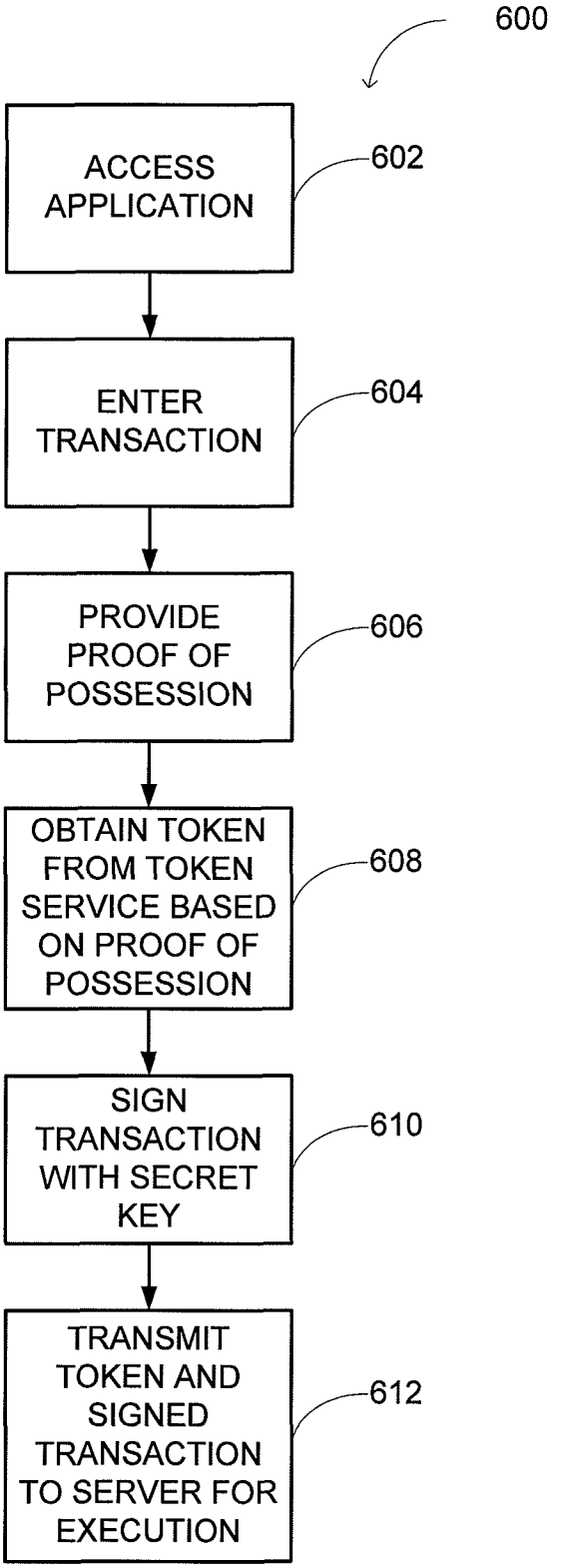
600
ACCESS APPLICATION
602
ENTER TRANSACTION
604
PROVIDE PROOF OF POSSESSION
606
OBTAIN TOKEN FROM TOKEN SERVICE BASED ON PROOF OF POSSESSION
608
SIGN TRANSACTION WITH SECRET KEY
610
TRANSMIT TOKEN AND SIGNED TRANSACTION TO SERVER FOR EXECUTION
612

FIGURE 6

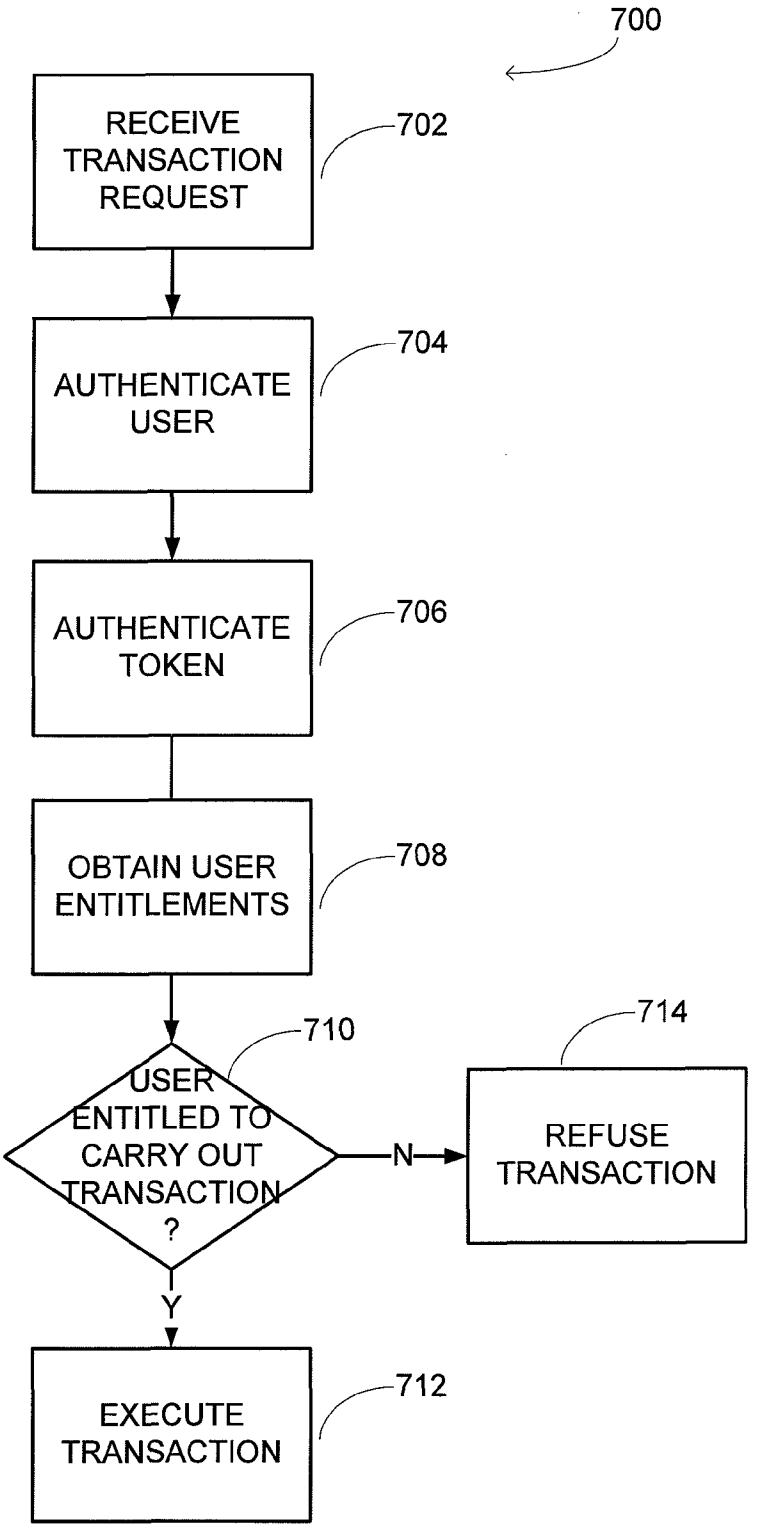
700
RECEIVE TRANSACTION REQUEST
702
AUTHENTICATE USER
704
AUTHENTICATE TOKEN
706
OBTAIN USER ENTITLEMENTS
708
USER ENTITLED TO CARRY OUT TRANSACTION ?
710
N
REFUSE TRANSACTION
714
Y
EXECUTE TRANSACTION
712

FIGURE 7

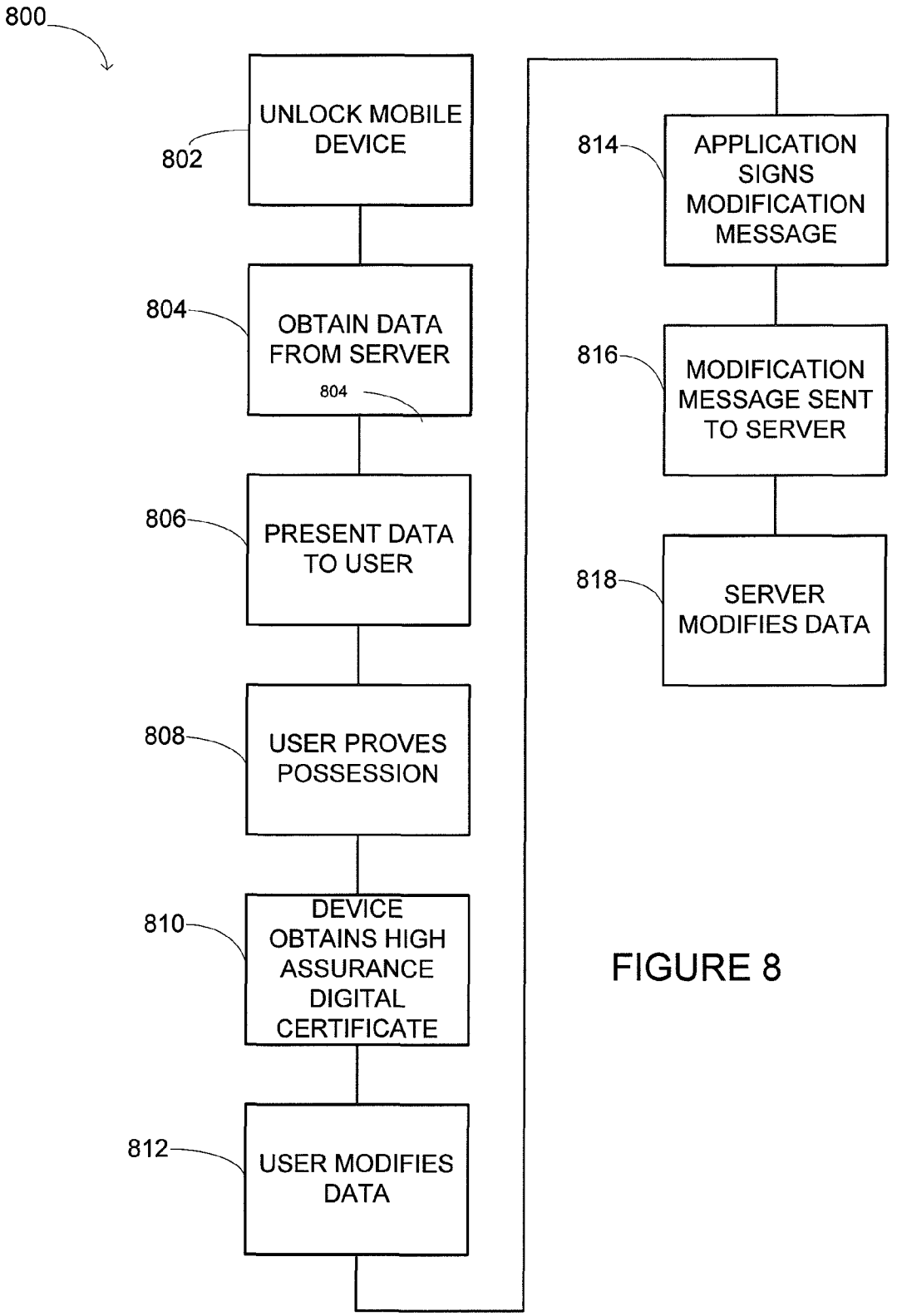
800
802
UNLOCK MOBILE DEVICE
804
OBTAIN DATA FROM SERVER
804
806
PRESENT DATA TO USER
808
USER PROVES POSSESSION
810
DEVICE OBTAINS HIGH ASSURANCE DIGITAL CERTIFICATE
812
USER MODIFIES DATA
814
APPLICATION SIGNS MODIFICATION MESSAGE
816
MODIFICATION MESSAGE SENT TO SERVER
818
SERVER MODIFIES DATA

FIGURE 8

SYSTEMS AND METHODS FOR REMOTE AUTHORIZATION OF FINANCIAL TRANSACTIONS USING PUBLIC KEY INFRASTRUCTURE (PKI)

CROSS REFERENCE TO RELATED APPLICATIONS

The instant application claims priority from provisional application No. 60/904,677, filed Mar. 2, 2007, the disclosure of which is incorporated herein by reference in its entirety.

FIELD OF THE INVENTION

This invention relates to systems and methods for remote authorization of transactions using Public Key Infrastructure (PKI) based on high assurance digital identification.

BACKGROUND OF THE INVENTION

Businesses and governments utilize identity management systems to manage user and device/application identities across multiple systems and applications in order to ensure that unauthorized parties do not access sensitive user communications. Certain identity management solutions rely on a technology known as Public Key Infrastructure (PKI), which enables users to be authenticated to each other by confirming identities issued through a trusted third party entity. Each PKI user is issued both a private key (analogous to code or other identifier that is known only to the user), and a public key, which is disclosed to all users. Central to a PKI system is that the public key be issued by a trusted third party. For example, if user A wishes to send a sensitive message to user B, user A would use user B's public key chained to the trusted third party to encrypt the message, which user B would decrypt with his private key.

Trust is the characteristic that one entity is willing to rely upon a second entity to execute a set of actions and/or to make a set of assertions about a subject. If public keys were not chained to a trusted third party, however, a malicious party could publish a public key purporting to be user B, and thereby intercept messages to user B using the phony public key's private equivalent.

To avoid this problem, institutions known as Certificate Authorities (CA) often serve the role of independent, trusted third parties to issue and manage identity certificates. In addition to encrypting messages (which ensures privacy), user A can authenticate himself to user B by using user A's private key to digitally sign the message and append to the message a digital certificate, signed by a trusted CA, indicating user A's public key. When user B receives the message, she can use user A's public key to decrypt the message, verify the digital signature of user A, and validate user A's public key by confirming with the trusted CA that the digital certificate is valid. Examples of CAs include Identrust, Entrust and VeriSign.

Wireless communication systems have grown dramatically in recent years. For example, numerous businesses, governments and institutions rely heavily on BLACKBERRY mobile devices to communicate. What is needed are more effective security systems to protect the integrity and authenticity of wireless communications and transactions.

SUMMARY OF THE INVENTION

This invention relates to methods and apparatus for signing and authenticating transactions initiated by mobile devices

utilizing the PKI system described above. According to one aspect, the invention relates to a method of managing remote communications using a Public Key Infrastructure (PKI) system. The method includes receiving at a centralized system a message containing at least one transaction request transmitted by a user using a remote wireless device. In one embodiment, the message is received according to the SOAP protocol.

The transaction request is digitally signed by the user using the user's private key. The message also includes a token from a security token service which contains data or information relating to the user's entitlements. The centralized system includes information relating to the entitlements required for at least the requested transaction.

The method further includes communicating with a trusted third party to authenticate the message using the user's public key and verifying the entitlement information contained in the token to confirm whether the user is authorized to perform the requested transaction. In one embodiment, the token is also authenticated. In one embodiment, the centralized system stores data related to a first set of users entitled to carry out a first set of transactions and data related to a second set of users entitled to carry out a second set of transactions. The first set of transactions is at least partially different than the second set of transactions.

The requested transaction is then performed if the user's entitlements satisfies all required entitlements for the requested transaction. In various embodiments, the transactions may include banking transactions, such as payments transactions, funds transfer transactions, securities transactions, and currency exchange transactions.

According to another aspect, the invention relates to a method of submitting a transaction by a mobile device. The method includes receiving by the mobile device, data authenticating the identity of a user of the mobile device. The mobile device then generates a transaction message including a token that verifies the authenticated identity of the user and entitlements associated with that user. In one embodiment, the token is digitally signed and includes or is accompanied by a digital certificate. The transaction message is then digitally signed using a private key and transmitted to a server for execution. In one embodiment, a digital certificate from a certificate authority verifying the user's public key is appended to the transfer message prior to transmission.

In one embodiment receiving the data authenticating the identity of the user includes receiving data from an RFID device in the possession of the user. In another embodiment, receiving the data authenticating the identity of the user includes receiving data from a smart card inserted into one of the mobile device and a smart card reader coupled to the device. In one such embodiment, the method includes retrieving either the token or a digital certificate from the smart card. In another embodiment, receiving the data authenticating the identity of the user includes receiving biometric data.

In other embodiments, the method includes obtaining the token. For example, in one embodiment, the token is obtained by transmitting the data authenticating the identity of the user to a token service. In an alternative embodiment, the method includes obtaining the token by transmitting a digital certificate to the token service based on the data authenticating the identity of the user. The digital certificate may be securely stored on the mobile device, such that it can only be accessed upon successful user authentication. The data may be communicated and the token obtained via SOAP protocol communications. In another embodiment, the token itself is stored securely on the mobile device, such that it can only be accessed upon successful user authentication.

According to a third aspect, the invention relates to a method for managing communications among financial services systems, users of financial services systems, and trusted third parties in Public Key Infrastructure (PKI). The method includes receiving at a centralized system a user remotely generated message containing at least one financial transaction. The message is digitally signed by the user using the user's private key and is accompanied by a token from a security token service. The token contains data relating to the user's entitlements. The centralized system contains information relating to the entitlements required for at least the requested transaction and applications and databases for recording and updating financial information and transactions based on the transaction.

The method also includes communicating with a trusted third party to authenticate the user's public key. The entitlement information contained in the token is verified to confirm whether the user is authorized to perform the requested transaction. If the user has the proper authorization, the requested transaction is either carried out by the centralized system and the applications and databases of the centralized system are updated to reflect the transaction, or instructions are transmitted to another system or database to perform the financial transaction.

According to a fourth aspect, the invention relates to a mobile device for submission of transaction instructions. The mobile device includes a wireless transceiver, an authentication device, and a processor. In one embodiment, the authentication device includes an RFID reader. In another embodiment, the authentication device includes a biometric data input. In another embodiment, the authentication device includes a smart card reader. The smart card reader may be coupled to the device via a wired or wireless link.

The processor is configured to retrieve, based on the data accepted by the authentication device, a secure token including the identity of the user and entitlements associated with the user, generate a transaction message including the transaction to be submitted and the retrieved token, sign the transaction message utilizing a digital certificate, and transmit the signed transaction message to a server via the wireless transceiver for execution. In one embodiment, the processor retrieves the token via a smart card reader authentication device. In another embodiment, the mobile device includes a memory for storing the token, and the processor is configured to retrieve the token from the memory in response to the data accepted by the authentication device. In another embodiment, the processor retrieves the token by transmitting a token request via the wireless transceiver based on the data accepted by the authentication device. The request may be transmitted, for example, via the SOAP protocol. In one embodiment, the processor is also configured to access the digital certificate in response to the data accepted by the authentication device.

According to a fifth aspect, the invention relates to a transaction system that includes a mobile device, a token service, a certificate authority, and a financial institution system. The mobile device submits transaction messages, which are digitally signed by a user of the mobile device, to a financial institution. The transaction messages include transaction instructions and a token indicating entitlements of the user of the mobile device. The token service verifies the identity and entitlements of the user of the mobile device based on authentication data provided by the mobile device. The token service also provides the token to the mobile device in response to the authentication data. The certificate authority verifies the digital signature used to sign the transaction message. The financial institution system receives the transaction message, obtains verification of the authenticity of the transaction message by communicating with the certificate authority, and determines that the user of the mobile device is entitled to execute the transaction instructions based on the entitlements included in the token.

BRIEF DESCRIPTION OF THE FIGURES

The invention may be better understood from the following illustrative description with reference to the following drawings.

FIG. **1** is a block diagram of a system for submission of financial transactions from a mobile device, according to an illustrative embodiment of the invention.

FIG. **2** is a diagram of a transaction message used in the system of FIG. **1** to communicate transaction instructions, according to an illustrative embodiment of the invention.

FIG. **3** is a block diagram of a mobile device suitable for use in the system of FIG. **1**, according to an illustrative embodiment of the invention.

FIG. **4** is a block diagram of a financial institution system suitable for use in the system of FIG. **1**, according to an illustrative embodiment of the invention.

FIG. **5** is a flow chart of a first method of submitting transaction instructions from a mobile device to a financial institution system, according to an illustrative embodiment of the invention.

FIG. **6** is a flow chart of a second method of submitting transaction instructions from a mobile device to financial institution system, according to an illustrative embodiment of the invention.

FIG. **7** is a flow chart of a method of processing a received transaction message from a mobile device, according to an illustrative embodiment of the invention.

FIG. **8** is a flow chart of a third method of submitting transaction instructions from a mobile device to a financial institution, according to an illustrative embodiment of the invention.

DESCRIPTION OF CERTAIN ILLUSTRATIVE EMBODIMENTS

To provide an overall understanding of the invention, certain illustrative embodiments will now be described. However, it will be understood by one of ordinary skill in the art that the methods described herein may be adapted and modified as is appropriate for the application being addressed and that the systems and methods described herein may be employed in other suitable applications, and that such other additions and modifications will not depart from the scope hereof

FIG. **1** is a block diagram of a system **100** for submission of financial transactions from a user device **102** to a financial institution **104**, according to an illustrative embodiment of the invention. In addition to the user device **102** and the financial institution **104**, the system includes a token service **106**, at least one certificate authority, e.g., certificate authority A **108** and certificate authority B **108**, and a network **112** enabling communication between various components of the system **100**. In various embodiments of the system **100**, the network **112** is a publicly accessible network, such as the Internet, a private network operated by financial institutions, or a combination thereof. In some embodiments, the system **100** includes a separate electronic user identifier **114**, such as a smart card or a RFID transponder.

The user device **102**, described further in relation to FIG. **3**, is a mobile computing device capable of networked communication, preferably over a wireless link **114**. For example, the

mobile device may communicate over a Wi-Fi, Wi-Max, cellular, BLUETOOTH, satellite or other wireless communication link. The wireless link **114** couples to the user device **102** to the network **112**. Suitable user devices include, without limitation, cellular telephones, smart phones, personal digital assistants, lap top computers, palm top computers, and other hand held computing devices, including BLACKBERRY communication devices offered by Research in Motion Limited, headquartered in Waterloo, Ontario, Canada.

The financial institution **104** can be, for example a bank, a brokerage, an exchange, or other financial institution desiring to enable high security financial transactions. One financial institution computing architecture suitable for use in the system is described further in FIG. **4**.

The token service **106** is an online service that stores personal information about users and performs authentication functions. A user, via the user device **102**, submits credentials to the token service **106** and receives a token in return. A token in one embodiment is an XML document that includes information or data indicating that the user has certain entitlements. Such information or data is referred to herein as "entitlement data." The term "entitlements" as used herein refers to the authority to carry out one or more specified actions or groups of actions. The entitlement data, in one embodiment, includes a set of authorized actions. In another embodiment, the entitlement data includes classes of authorized actions. In still other embodiments, the entitlement data includes an authority level or a role identifier (e.g., manager, director, salesperson, etc.). The entitlement data may also include thresholds with respect to particular actions or classes of actions. Preferably, communications between the user device **102** and the token service **106** occur according to the SOAP protocol.

The credentials supplied to the token service **106** can take several forms without departing from the scope of the invention. For example, in one implementation, the credentials include a high assurance digital certificate. In alternate implementations, the credentials include biometric information, a secret key, or other security information authenticating the user of the user device **102**. Preferably, the credentials satisfy a proof of possession test. That is, the credentials verify that a specific known user is using the user device **102**. This is in contrast to merely authenticating that the user device **102** is the device it claims to be. To satisfy a proof of possession test, it is preferable that the credentials, if stored on the user device **102**, are only stored in a secure fashion that cannot be accessed without a user authenticating himself or herself to the user device **102**, using, for example and without limitation, biometric information, a password, a RFID transponder, a BLUETOOTH dongle, or a smartcard. Alternatively, the credentials themselves can be stored on the smartcard or other removable memory device.

After generating the token based on the credentials, the token service **106** preferably digitally signs the token and appends a digital certificate including the public key of the token service **106**. The digital certificate may be issued, for example, by certificate authority A **108** or certificate authority B **110**. The token service **106** returns the digitally signed token to the user device **102**. The token is then included by the user device **102** in communications with the financial institution **104** to securely communicate the entitlements of the user of user device **102**.

FIG. **2** is a diagram of a suitable transaction message **200** format for use in the system **100**. The message **200** includes a token **202**, transaction instructions **204**, and a digital signature **206**. In one embodiment, the message **200** is a SOAP protocol message, though alternative message formats can be employed without departing from the scope of the invention.

The token **202** is provided by a token service, such as token service **106**. The token **202** includes a user ID **208**, entitlement data **210**, and a digital certificate **212**. The user ID **208** identifies the sender of the transaction instructions. The user ID **208** may be a user's name, an employee ID, an account number, a user name, or other identifier that uniquely identifies the user to a recipient financial institution. Entitlement data **210**, as described above, directly (for example, in list format), or indirectly (for example, by indicating a user role or position), indicates the types of transactions a user is permitted to execute and any limits that might be imposed on such permission. The digital certificate **212** is signed by the token service **106** enabling a recipient to verify the authenticity of the token **106**.

The transaction instructions **204** includes instructions to the recipient with respect to a requested transaction. The transaction instructions **204** include a transaction type, as well as data for the transaction type's requisite parameters. For example, for a payment transaction, the transaction instructions **204** include a source account, a destination account, a payment date and time, and a payment amount. A currency exchange transaction includes an account number, a currency pair for the exchange, an amount of one of the currencies in the pair, and a date and time to execute the exchange.

The digital signature **206** is generated by a user's application based on the private key of the user. A user can verify the authenticity of the message by using the public key of the user. The translation message **200** can also include a digital certificate issued by a trusted third party such that the recipient can verify the authenticity that the public-private key pair used to authenticate the user actually corresponds to the user.

FIG. **3** is a block diagram of a user device **102** suitable for use in the system **100**. Suitable user devices **102**, as mentioned above in relation to FIG. **1**, include, without limitation, cellular telephones, smart phones, personal digital assistants, lap top computers, palm top computers, and other hand held computing devices, including BLACKBERRY communication devices offered by Research in Motion Limited, headquartered in Waterloo, Ontario, Canada. The user device **102** includes a processor **302**, a memory **304**, an authentication device **306**, a display **308**, a user interface **310**, and a wireless transceiver **312**.

The processor **302** is preferably a general purpose processor capable of executing a transaction application and controlling and/or interfacing with the remaining components of the user device **102**. However, in alternative implementations, the processor **302** is a special purpose processor configured for carrying out the functionality described herein. The memory **304** is preferably coupled to the processor via a bus. The memory **304** may include both volatile and non-volatile memory. For example, the memory may include volatile memory for storage of loaded application instructions and application data, as well as a hard drive or integrated circuit storage device, such as a flash memory device. The non-volatile memory stores a transaction application **314** for execution on the processor **304**. In some implementations, the memory also stores a high assurance digital certificate **316** issued by a trusted certificate authority. Preferably, the memory **304** stores digital certificate **316** in a secure fashion, such that it cannot be accessed by a user without the user authenticating him or herself via the authentication device **306**. Alternatively, a digital certificate is loaded into volatile memory temporarily from a smart card or other separable memory device used to authenticate a user.

The authentication device **306**, in one implementation is a smart card reader for accessing data stored on a smart card. The stored data may include a high assurance digital certificated associate with a particular user. Alternatively, the stored data may include a code suitable for accessing such a digital certificate securely stored in the memory **304** of the user device **102**. In still another alternative, the smart card includes a secret code shared between the token service **106** and the user device **102**.

In an alternative embodiment, the authentication device **306** is a RFID reader for receiving a signal from a RFID transponder corresponding to the user of the user device **102**. In one particular implementation, the RFID transponder is a passive RFID chip being powered by signals transmitted by the RFID reader. In another implementation, the RFID transponder is an active RFID chip having its own power source. As with the smart card, the RFID transponder may provide a digital certificate, a code for accessing a digital certificate, or other secret code used to prove that the user device **102** is being used by the user that corresponds to the transponder.

Alternative authentication devices **306** include biometric data inputs, such as retinal scanners, fingerprint scanners, and speaker recognition devices. The authentication device **306** may also be integrated into the transaction application **314**. For example, the transaction application, in one implementation prompts a user on the display **308** to enter a user ID and password via the user interface **310**.

The display **308** may include any suitable display for presenting sufficient data to a user for the user to make determinations with respect to available transactions and to display a graphical user interface for the user to enter such transactions. The user input **310** may include, without limitation, a keypad, keyboard, touch screen, and/or a speech recognition system.

The wireless transceiver **312** includes one or more transceivers capable of wireless communications. The transceiver may be a BLUETOOTH transceiver, a WIFI transceiver, a WIMAX transceiver, a cellular transceiver, a PCS transceiver, or any other transceiver suitable for secure wireless communications. Alternatively, the wireless transceiver **312** may include separate receivers and transmitters.

FIG. **4** is a block diagram of the relevant computing infrastructure of a financial institution **400**, according to an illustrative embodiment of the invention. The infrastructure **400** includes a network interface **402**, a transaction server **404**, a transaction database **406**, a security server **408**, an authority database **410**, and optionally, a PKI database **412**. The various components may be implemented on one or more hardware platforms, networked together by a local area network.

The network interface **402** provides communications links to one or more external data networks. The data networks may be public wide area networks, such as the Internet, or they may be private networks, such as private financial networks.

The transaction server **404** is responsible for managing and executing financial transactions. In one embodiment, the transaction server **404** includes computer executable instructions stored on a computer-readable medium for execution by a general purpose processor. The infrastructure **400** may also include several transaction servers **404**, and a load-balancing proxy server to distribute transaction loads among the transaction servers **404**. The transaction server **404** is responsible for transmitting data to users of user devices **102** related to potential transactions, receiving transaction instructions from user devices **102**, and executing any authorized transactions included in the transaction instructions. Data sent to user devices **102** may be obtained from the transaction database **406**, which stores data related to user accounts. The transaction database **406** may also store additional financial information, including, without limitation, current and historical stock and derivative prices, market indicators, bond prices and yields, currency exchange rates, company securities data, trade data, and prices and availability of goods and/or services. In one embodiment, the transaction database **406** includes one or more networked database servers. In another embodiment, the transaction database executes on the same general purpose processor as the transaction server **404**.

Before executing a transaction, and in some circumstances, before transmitting certain data to a user device **102**, the transaction server **404** first authenticates the user and the user's permissions. To do so, the transaction server **404** utilizes the security server **408**. The security server **408** includes computer readable instructions executing on a general purpose processor. The general purpose processor may be the same processor as the processor executing the computer readable instructions of the transaction server **404**. Alternatively, the security server **408** may execute on its own processor. In addition, like the transaction server **404**, the infrastructure **400** may include additional security servers **408** and a load balancing server to distribute authentication and authorization requests among the security servers **408**.

The security server **408** is responsible for authenticating user devices **102** and users, and for verifying user permissions. User devices are authenticated through a combination of verifying the digital signature **206** and/or digital certificate attached to a transaction message **200** by the user device **102** and by verifying the digital certificate **212** incorporated into the token **202** supplied by the token service **106**. The digital signature **206** can be verified using the optional local PKI database **412**, or by contacting a certificate authority certifying the user's public key. The digital certificate **212** in the token **202** is verified with a certificate authority responsible for certifying the public key of the token service **106**.

The security server **408** verifies user permissions based on entitlement data **210** stored in the token **202** of a transaction message **200**. In one embodiment, in which the entitlement data **210** identifies a role or position associated with the user, the security server **408** queries the authority database **410** to identify the permissions associated with that role or position. Assigning permissions based on role or position enables relatively easy management of permissions at the expense of providing permission granularity. For example, if an employee receives a promotion, the employee's permissions need not be individually reassigned. Instead, the token service **106** can be informed of their new role or position, and the employee will receive all permissions associated with the new role.

Alternatively, in situations in which more fine control of permissions is desired, the entitlements data can include an explicit list of the user's permissions. In this implementation, the security server merely needs to verify the authenticity of the token **202**. No reference to the authority database **410** is needed.

FIG. **5** is a flow chart of a first method **500** of submitting transaction instructions from a mobile device to a financial institution system, according to an illustrative embodiment of the invention. The method **500** begins with a user accessing a transaction application, such as transaction application **314**, on a mobile device, such as user device **102** (step **502**). Upon launching the transaction application **314**, the user is prompted for and provides a proof of possession (step **504**). That is, the user authenticates him or herself to the user device **102** using an authentication device, such as any of the authentication devices described above in relation to authentication device **306**. Using the data obtained during the proof of possession test (step **504**), for example, a high assurance digital

certificate or other credentials, the transaction application **314** obtains a token, such as token **202**, from a token service, such as token service **106** (step **506**). Upon receipt of a token, the user enters a transaction into the user device **102** (step **508**). The transaction application **314** forms a transaction message, including the entered transaction and the token, and signs the transaction message with a secret key (step **510**), for example, the user's private key of a private-public key pair. The transaction application **314** transmits the signed transaction message, including the transaction instructions and the token, to a financial institution for execution (step **512**).

FIG. **6** is a flow chart of a second method **600** of submitting transaction instructions from a mobile device to a financial institution system, according to an illustrative embodiment of the invention. In contrast to the method **500**, in which a user provides a proof of possession once upon launching a transaction application, in the method **600**, the user proves possession and obtains a new token for each entered transaction. In alternative implementations, a user is required to re-prove possession of the user device **102** after a predetermined amount of time has lapsed since a prior proof. In still another alternative implementation, the transaction application **314** or the transaction server **404** of a financial institution dynamically determines whether a new proof of possession is required based on the type and/or magnitude of the transaction being requested.

The method **600** begins with a user accessing a transaction application, such as transaction application **314**, on a mobile device, such as user device **102** (step **602**). The user then enters a transaction into the user device **102** (step **604**). Upon entry of the transaction (step **604**), the user is prompted for and provides a proof of possession (step **606**). Using the data obtained during the proof of possession test (step **606**), for example, a high assurance digital certificate or other credentials, the transaction application **314** obtains a token, such as token **202**, from a token service, such as token service **106** (step **608**). Upon receipt of a token, the transaction application **314** forms a transaction message, including the entered transaction and the token, and signs the transaction message with a secret key (step **610**), for example, the user's private key of a private-public key pair. The transaction application **314** transmits the signed transaction message to a financial institution for execution (step **612**).

FIG. **7** is a flow chart of a method **700** of processing a received transaction message from a mobile device, according to an illustrative embodiment of the invention. The method begins with a financial institution receiving a transaction message, such as transaction message **200**, from a user device, such as user device **102** (step **702**). The financial institution then authenticates the user (step **704**) based on the digital signature used to sign the transaction message. The user may be authenticated, for example, by contacting a certificate authority issuing the user his or her public-private key pair, or by looking up the user's public key in a trusted local database of PKI information.

The financial institution then authenticates the token (step **706**) included in the transaction message **200**. The token is authenticated by contacting the certificate authority issuing the digital certificate included in the token. Based on the entitlement data included in the token, the financial institution obtains the user's entitlements and permissions, as described above in relation to FIG. **4** (step **708**).

At decision block **710**, based on the obtained entitlements, the financial institution determines whether the user has the authority to carry out the requested transaction. If the user is authorized, the financial institution executes the transaction (step **712**). Otherwise, the transaction is refused (**714**). In response to a transaction being refused (step **714**), the financial institution may inform the user of the refusal. The financial institution may also inform the user's supervisor or with designated security personnel affiliated with an account involved in the transaction.

FIG. **8** is a flow chart of a third method **800** of submitting transaction instructions from a mobile device to a financial institution, according to an illustrative embodiment of the invention. The method begins with a user unlocking his or her mobile device (step **802**). A device may be unlocked, for example, by entering a password or by deactivating a key lock feature of the device. Upon launching a transaction application, such as transaction application **314**, the user device **102** obtains data from a server at the financial institution (step **804**). The data includes, for example, proposed transactions requiring the user's sign-off prior to execution. The user device then displays the data to the user (step **806**).

The user then provides a proof of possession (step **808**) via the authentication device **306** of the user device **102** to obtain access to a high assurance digital certificate (step **810**). The user device may obtain access to the digital certificate by downloading it from a device used to prove the user's possession of the device. Alternatively, data obtained from the possession proof is used to decrypt the digital certificate previously stored in a device memory, enabling its usage in authenticating transactions.

The user then modifies the presented data (step **812**). For example, the user may modify and/or authorize one or more of the displayed transactions. Upon indication of the user to submit the revised data, the transaction application **314** forms and digitally signs a data modification message including the revised financial data and the high assurance digital certificate to which access was obtained at step **810** (step **814**). The transaction application **314** then transmits the signed data modification message to the server at the financial institution (step **816**). Upon receipt of the data modification message and authentication of the user, the server modifies the data (step **818**), for example by modifying and/or executing transactions included in the data modification message.

The invention may be embodied in other specific forms without departing from the spirit or essential characteristics thereof. The forgoing embodiments are therefore to be considered in all respects illustrative, rather than limiting of the invention.

What is claimed is:

1. A method of managing remote communications on a remote wireless device using a Public Key Infrastructure (PKI) system, comprising the steps of:

receiving at a centralized system a message containing at least one transaction request transmitted by a user using the remote wireless device which is digitally signed by the user using a private key associated with the user, accompanied by a token from a security token service which contains data or information relating to the user's entitlements and which is digitally signed by the security token service using a second private key associated with the security token service, said centralized system containing information relating to the entitlements required for at least the requested transaction;

communicating with a first trusted third party to authenticate the transaction request using a public key associated with the user, wherein the first-trusted third party operates independently of the user;

communicating with a second trusted third party to authenticate the token using a key associated with the security token service, wherein the second trusted third party operates independently of the token service;

verifying at the centralized system, the entitlement information contained in the token to confirm whether the user is authorized to perform the requested transaction; and

performing the requested transaction if the user's entitlements satisfy required entitlements associated with the requested transaction.

2. The method of claim **1**, wherein the transaction comprises a banking transaction.

3. The method of claim **1**, wherein the transaction comprises a payment transaction.

4. The method of claim **1**, wherein the transaction comprises a securities transaction.

5. The method of claim **1**, wherein the transaction comprises a currency exchange transaction.

6. The method of claim **1**, comprising authenticating the token.

7. The method of claim **1**, wherein the centralized system contains data related to a first set of users entitled to carry out a first set of transactions and data related to a second set of users entitled to carry out a second, at least partially different set of transactions.

8. The method of claim **1**, wherein the centralized system receives the message according to the SOAP protocol.

9. A method for submitting a transaction by a mobile device, comprising:

receiving, by the mobile device, data from a first trusted third party authenticating the identity of a user of the mobile device using a public key associated with the user;

communicating with a second trusted third party to obtain a token that indicates entitlement data for the user and which is digitally signed by an independent security token service using a second private key associated with the security token service;

generating, by the mobile device, a transaction message including the token, wherein the transaction message verifies the authenticated identity of the user and entitlement data associated with the user;

digitally signing the transaction message and appending a digital certificate thereto; and

transmitting the signed transaction message to a server for execution.

10. The method of claim **9**, wherein the transaction comprises a financial transaction.

11. The method of claim **9**, wherein receiving data authenticating the identity of the user comprises receiving data from an RFID device in possession of the user.

12. The method of claim **9**, wherein receiving data authenticating the identity of the user comprises reading data from a smart card inserted into one of the mobile device and a smart card reader coupled to the device.

13. The method of claim **12**, comprising retrieving the token from the smart card.

14. The method of claim **12**, comprising retrieving a digital certificate from the smart card.

15. The method of claim **9**, wherein receiving data authenticating the identity of the user comprises receiving user biometric data.

16. The method of claim **15**, wherein the token includes a token service digital certificate.

17. The method of claim **9**, comprising obtaining the token by transmitting the data authenticating the identity of the user to a token service.

18. The method of claim **17**, wherein the token is obtained and the data authenticating the identity of the user is transmitted to the token service according to the SOAP protocol.

19. The method of claim **9**, comprising obtaining the token by transmitting a digital certificate to the token service based on the data authenticating the identity of the user.

20. The method of claim **9**, wherein the token is securely stored on the mobile device, the method comprising gaining access to the token in response to receiving data authenticating the identity of the user.

21. The method of claim **9**, wherein the data or information relating to the user's entitlements includes at least one of an authority level associated with the user, a role identifier that identifies an organizational role of the user in a company, and a set of actions that the user is authorized to make.

22. The method of claim **9**, further comprising determining one or more types of transactions that the user is permitted to execute and one or more limits imposed on the permission based on the information relating to the user's entitlements.

23. A method for managing communications between and among financial services systems, users of financial services systems, and trusted third parties in Public Key Infrastructure (PKI) comprising:

receiving at a centralized system a user remotely-generated message containing at least one financial transaction which is digitally signed by such user using its private key, accompanied by a token from a security token service which contains data or information relating to the user's entitlements, wherein said centralized system contains i) information relating to the entitlements required for at least the requested transaction and ii) applications and databases for recording and updating financial information and transactions;

communicating with a first trusted third party to authenticate the message using the user's public key, wherein the first trusted third party operates independently of the user;

communicating with a second trusted third party to authenticate the token using a key associated with the security token service to confirm whether the user is authorized to perform the requested transaction, wherein the second trusted party operates independently of the token service;

performing the requesting transaction if the user's entitlements satisfy the required entitlement for the requested transaction; and

updating said applications and databases to reflect the at least one financial transaction contained in the message or electronically transmitting to another system or database instructions to perform said at least one financial transaction.

24. A mobile device for submission of transaction instructions comprising:

a wireless transceiver;

an authentication device for accepting data from a first trusted third party indicative of the identity of a user of the mobile device;

a processor configured to:

retrieve, based on the data accepted by the authentication device, a secure token including the identity of the user and information or data relating to entitlements associated with the user from a second trusted third party; wherein the secure token is digitally signed by a security token service using a private key associated with the security token service, and the second trusted third party operates independently of the security token service;

generate a transaction message including the transaction to be submitted and the retrieved token;

sign the transaction message utilizing a digital certificate; and

transmit the signed transaction message to a server via the wireless transceiver for execution.

25. The mobile device of claim **24**, comprising a memory for storing the token and wherein the processor is configured to retrieve the token from the memory in response to the data accepted by the authentication device.

26. The mobile device of claim **24**, wherein the processor retrieves the token in part by transmitting a token request via the wireless transceiver based on the data accepted by the authentication device.

27. The mobile device of claim **26**, wherein the token request is transmitted using the SOAP protocol.

28. The mobile device of claim **24**, wherein the authentication device comprises an RFID reader.

29. The mobile device of claim **24**, wherein the authentication device comprises a biometric data input.

30. The mobile device of claim **24**, wherein the authentication device comprises a smart card reader.

31. The mobile device of claim **30**, wherein the smart card reader is coupled to the mobile device by a wired or wireless link.

32. The mobile device of claim **30**, wherein the processor retrieves the token via the smart card reader.

33. The mobile device of claim **30**, wherein the processor is configured to retrieve the digital certificate from the smart card reader.

34. The mobile device of claim **24**, wherein the processor is configured to access the digital certificate in response to the data accepted by the authentication device.

35. A transaction system comprising:

a mobile device for submitting a transaction message, digitally signed by a user of the mobile device using a private key associated with the user, to a financial institution, wherein the transaction message includes transaction instructions and a token indicating entitlements of the user of the mobile device wherein the transaction message is authenticated by a first trusted third party that operates independently of the user;

a second trusted third party token service for verifying the identity and entitlements of the user of the mobile device based on authentication data provided by the mobile device and for providing the token to the mobile device in response thereto, the token being digitally signed by a token service using a second private key associated with the token service, wherein the second trusted token service third party operates independently of the user and is distinct from the first trusted third party; and

a certificate authority for verifying a digital signature used to sign the transaction message; and

a financial institution system for receiving the transaction message, obtaining verification of the authenticity of the transaction message by communicating with the certificate authority, determining that the user of the mobile device is entitled to execute the transaction instructions based on the entitlements included in the token.

* * * * *