FISH & RICHARDSON P.C.

Street Address
One Marina Park Drive
Boston, Massachusetts
02210-1878

Mail Address
P.O. Box 1022
Minneapolis, Minnesota
55440-1022

Telephone
617 542-5070

Facsimile
877 769-7945

Web Site
www.fr.com

Frederick P. Fish
1855-1930

W.K. Richardson
1859-1951

FR

ATLANTA
AUSTIN
BOSTON
DALLAS
DELAWARE
HOUSTON
MUNICH
NEW YORK
SILICON VALLEY
SOUTHERN CALIFORNIA
TWIN CITIES
WASHINGTON, DC

March 8, 2013

Attorney Docket No.: 01997-0358008 / MIT Case No. 12525

Commissioner for Patents
P.O. Box 1450
Alexandria, VA 22313-1450

Presented for filing is a new continuation patent application of:

Inventor(s): ARISTEIDIS KARALIS, ANDRE B. KURS, ROBERT MOFFATT, JOHN D. JOANNOPOULOS, PETER H. FISHER AND MARIN SOLJACIC

Title: WIRELESS ENERGY TRANSFER

Enclosed are the following papers, including those required to receive a filing date under 37 CFR §1.53(b):

	Pages
Specification	58
Claims	6
Abstract	1
Declaration	[To be Filed at a Later Date]
Drawing(s)	14

Enclosures:

— Power of Attorney, 9 pages.
— New disclosure information, including:
Information disclosure statement, 3 pages.
PTO-1449, 22 pages.
References, 537 items, 0 submitted.
— Application Data Sheet, 8 pages.

This application is a continuation (and claims the benefit of priority under 35 USC 120) to U.S. Application Serial No. 13/477,459, filed May 22, 2012, which is a continuation of U.S. Application Serial No. 13/036,177, filed February 28, 2011, which is a continuation of U.S. Application Serial No. 12/437,641, filed May 8, 2009, now U.S. Patent No. 8,097,983, which is a continuation of U.S. Application Serial No. 12/055,963 filed March 26, 2008, now U.S. Patent No. 7,825,543, which: 1) is a continuation-in-part of U.S. Utility Patent Application Serial No. 11/481,077, filed July 5, 2006, now U.S. Patent No. 7,741,734, which claims priority to U.S. Provisional Application Serial No. 60/698,442, filed July 12, 2005; (2) pursuant to

U.S.C. § 119(e), claims priority to U.S. Provisional Application Serial No. 60/908,383, filed March 27, 2007, and U.S. Provisional Application Serial No. 60/908,666, filed March 28, 2007; and (3) pursuant to U.S.C. § 120, and U.S.C. § 363, is also a continuation-in-part of International Application No. PCT/US2007/070892, filed June 11, 2007. The prior applications are considered part of (and are incorporated by reference in) the disclosure of this application.

This application substantially copies certain claims from U.S. Patent No. 8,178,995 to Amano et al., which issued on May 15, 2012.

Please apply the filing fee and any other required fees or any credits to deposit account 06-1050, referencing the attorney docket number shown above.

If this application is found to be incomplete, or if a telephone conference would otherwise be helpful, please call the undersigned at (617) 542-5070.

Please direct all correspondence to the following:

26161
PTO Customer Number

Respectfully submitted,

/Marc M. Wefers Reg. No. 56,842/

Marc M. Wefers
Reg. No. 56,842
Enclosures
MZW/czc
22996383.doc

Electronic Patent Application Fee Transmittal

Application Number:	
Filing Date:	
Title of Invention:	WIRELESS ENERGY TRANSFER
First Named Inventor/Applicant Name:	Aristeidis Karalis
Filer:	Marc M. Wefers/Cheryl Forrest
Attorney Docket Number:	01997-0358008

Filed as Large Entity

Utility under 35 USC 111(a) Filing Fees

Description	Fee Code	Quantity	Amount	Sub-Total in USD($)
Basic Filing:				
Utility application filing	1011	1	390	390
Utility Search Fee	1111	1	620	620
Utility Examination Fee	1311	1	250	250
Pages:				
Claims:				
Independent claims in excess of 3	1201	7	250	1750
Miscellaneous-Filing:				
Petition:				

Description	Fee Code	Quantity	Amount	Sub-Total in USD($)
Patent-Appeals-and-Interference:				
Post-Allowance-and-Post-Issuance:				
Extension-of-Time:				
Miscellaneous:				
		Total in USD ($)		**3010**

Electronic Acknowledgement Receipt

EFS ID:	15152770
Application Number:	13789860
International Application Number:	
Confirmation Number:	4131
Title of Invention:	WIRELESS ENERGY TRANSFER
First Named Inventor/Applicant Name:	Aristeidis Karalis
Customer Number:	26161
Filer:	Marc M. Wefers/Jodi Budge
Filer Authorized By:	Marc M. Wefers
Attorney Docket Number:	01997-0358008
Receipt Date:	08-MAR-2013
Filing Date:	
Time Stamp:	11:02:12
Application Type:	Utility under 35 USC 111(a)

Payment information:

Submitted with Payment	yes
Payment Type	Deposit Account
Payment was successfully received in RAM	$3010
RAM confirmation Number	26435
Deposit Account	061050
Authorized User	

File Listing:

Document Number	Document Description	File Name	File Size(Bytes)/ Message Digest	Multi Part /.zip	Pages (if appl.)

1	Application Data Sheet	ADS.pdf	1396114 2c080801d8575b554648454d38a17eb985669ae5	no	8
Warnings:					
Information:					
2		Application.pdf	604551 e0b8f4e60702939939d63f17b8aa222e4ab9ce05	yes	65

	Multipart Description/PDF files in .zip description		
	Document Description	**Start**	**End**
	Specification	1	58
	Claims	59	64
	Abstract	65	65

Warnings:					
Information:					
3	Drawings-only black and white line drawings	Drawings.pdf	3436626 c480a82e4d7ac751369697ed0918a9e7ce45582b	no	14
Warnings:					
Information:					
4		IDS.pdf	330378 19944c3f3a74c87ddfc369485996d20ac832973b	yes	25

	Multipart Description/PDF files in .zip description		
	Document Description	**Start**	**End**
	Transmittal Letter	1	3
	Information Disclosure Statement (IDS) Form (SB08)	4	25

Warnings:					
Information:					
5	Power of Attorney	POA.pdf	246358 64220341ceba4ab5f976f87bad759613dc2aeaa6	no	9
Warnings:					
Information:					
6	Transmittal of New Application	PAP.pdf	67422 bff257e1ca192822345931e6da1c0a99eb45ec9d	no	2
Warnings:					

Information:					
7	Fee Worksheet (SB06)	fee-info.pdf	36193 c4250efa548da955e88c2c367d24dc9f5fb23da0	no	2
Warnings:					
Information:					
			Total Files Size (in bytes):	6117642	

This Acknowledgement Receipt evidences receipt on the noted date by the USPTO of the indicated documents, characterized by the applicant, and including page counts, where applicable. It serves as evidence of receipt similar to a Post Card, as described in MPEP 503.

New Applications Under 35 U.S.C. 111
If a new application is being filed and the application includes the necessary components for a filing date (see 37 CFR 1.53(b)-(d) and MPEP 506), a Filing Receipt (37 CFR 1.54) will be issued in due course and the date shown on this Acknowledgement Receipt will establish the filing date of the application.

National Stage of an International Application under 35 U.S.C. 371
If a timely submission to enter the national stage of an international application is compliant with the conditions of 35 U.S.C. 371 and other applicable requirements a Form PCT/DO/EO/903 indicating acceptance of the application as a national stage submission under 35 U.S.C. 371 will be issued in addition to the Filing Receipt, in due course.

New International Application Filed with the USPTO as a Receiving Office
If a new international application is being filed and the international application includes the necessary components for an international filing date (see PCT Article 11 and MPEP 1810), a Notification of the International Application Number and of the International Filing Date (Form PCT/RO/105) will be issued in due course, subject to prescriptions concerning national security, and the date shown on this Acknowledgement Receipt will establish the international filing date of the application.

PTO/AIA/14 (08-12)
Approved for use through 01/31/2014. OMB 0651-0032
U.S. Patent and Trademark Office; U.S. DEPARTMENT OF COMMERCE
Under the Paperwork Reduction Act of 1995, no persons are required to respond to a collection of information unless it contains a valid OMB control number.

Application Data Sheet 37 CFR 1.76	Attorney Docket Number	01997-0358008
	Application Number	
Title of Invention	WIRELESS ENERGY TRANSFER	

The application data sheet is part of the provisional or nonprovisional application for which it is being submitted. The following form contains the bibliographic data arranged in a format specified by the United States Patent and Trademark Office as outlined in 37 CFR 1.76.
This document may be completed electronically and submitted to the Office in electronic format using the Electronic Filing System (EFS) or the document may be printed and included in a paper filed application.

Secrecy Order 37 CFR 5.2

☐ Portions or all of the application associated with this Application Data Sheet may fall under a Secrecy Order pursuant to 37 CFR 5.2 (Paper filers only. Applications that fall under Secrecy Order may not be filed electronically.)

Inventor Information:

Inventor 1 Remove

Legal Name

Prefix	Given Name	Middle Name	Family Name	Suffix
	Aristeidis		Karalis	

Residence Information (Select One) ◉ US Residency ○ Non US Residency ○ Active US Military Service

City	Boston	State/Province	MA	Country of Residence i	US

Mailing Address of Inventor:

Address 1	151 Tremont Street Apt. 21F		
Address 2			
City	Boston	State/Province	MA
Postal Code	02111	Country i	US

Inventor 2 Remove

Legal Name

Prefix	Given Name	Middle Name	Family Name	Suffix
	Andre	B.	Kurs	

Residence Information (Select One) ◉ US Residency ○ Non US Residency ○ Active US Military Service

City	Chestnut Hill	State/Province	MA	Country of Residence i	US

Mailing Address of Inventor:

Address 1	250 Hammond Pond Parkway Apt. 1203S		
Address 2			
City	Chestnut Hill	State/Province	MA
Postal Code	02467	Country i	US

Inventor 3 Remove

Legal Name

Prefix	Given Name	Middle Name	Family Name	Suffix
	Robert		Moffatt	

Residence Information (Select One) ◉ US Residency ○ Non US Residency ○ Active US Military Service

Application Data Sheet 37 CFR 1.76	Attorney Docket Number	01997-0358008
	Application Number	
Title of Invention	WIRELESS ENERGY TRANSFER	

City	Reston	State/Province	VA	Country of Residence i	US

Mailing Address of Inventor:

Address 1	2205 Stirrup Iron Lane		
Address 2			
City	Reston	State/Province	VA
Postal Code	20191	Country i	US

Inventor 4 Remove

Legal Name

Prefix	Given Name	Middle Name	Family Name	Suffix
	John	D.	Joannopoulos	

Residence Information (Select One) (•) US Residency ( ) Non US Residency ( ) Active US Military Service

City	Belmont	State/Province	MA	Country of Residence i	US

Mailing Address of Inventor:

Address 1	64 Douglas Road		
Address 2			
City	Belmont	State/Province	MA
Postal Code	02478	Country i	US

Inventor 5 Remove

Legal Name

Prefix	Given Name	Middle Name	Family Name	Suffix
	Peter	H.	Fisher	

Residence Information (Select One) (•) US Residency ( ) Non US Residency ( ) Active US Military Service

City	Cambridge	State/Province	MA	Country of Residence i	US

Mailing Address of Inventor:

Address 1	13 Cornelius Way		
Address 2			
City	Cambridge	State/Province	MA
Postal Code	02141	Country i	US

Inventor 6 Remove

Legal Name

Prefix	Given Name	Middle Name	Family Name	Suffix
	Marin		Soljacic	

Residence Information (Select One) (•) US Residency ( ) Non US Residency ( ) Active US Military Service

City	Belmont	State/Province	MA	Country of Residence i	US

PTO/AIA/14 (08-12)
Approved for use through 01/31/2014. OMB 0651-0032
U.S. Patent and Trademark Office; U.S. DEPARTMENT OF COMMERCE
Under the Paperwork Reduction Act of 1995, no persons are required to respond to a collection of information unless it contains a valid OMB control number.

Application Data Sheet 37 CFR 1.76	Attorney Docket Number	01997-0358008
	Application Number	
Title of Invention	WIRELESS ENERGY TRANSFER	

Mailing Address of Inventor:

Address 1	44 Westlund Road		
Address 2			
City	Belmont	**State/Province**	MA
Postal Code	02478	**Country**	US

All Inventors Must Be Listed - Additional Inventor Information blocks may be generated within this form by selecting the **Add** button. Add

Correspondence Information:

Enter either Customer Number or complete the Correspondence Information section below.
For further information see 37 CFR 1.33(a).

☐ **An Address is being provided for the correspondence Information of this application.**

Customer Number	26161		
Email Address		Add Email	Remove Email

Application Information:

Title of the Invention	WIRELESS ENERGY TRANSFER		
Attorney Docket Number	01997-0358008	**Small Entity Status Claimed**	☐
Application Type	Nonprovisional		
Subject Matter	Utility		
Suggested Class (if any)		**Sub Class (if any)**	
Suggested Technology Center (if any)			
Total Number of Drawing Sheets (if any)	14	**Suggested Figure for Publication (if any)**	

Publication Information:

☐ Request Early Publication (Fee required at time of Request 37 CFR 1.219)

☐ **Request Not to Publish.** I hereby request that the attached application not be published under 35 U.S.C. 122(b) and certify that the invention disclosed in the attached application **has not and will not** be the subject of an application filed in another country, or under a multilateral international agreement, that requires publication at eighteen months after filing.

Representative Information:

Representative information should be provided for all practitioners having a power of attorney in the application. Providing this information in the Application Data Sheet does not constitute a power of attorney in the application (see 37 CFR 1.32).
Either enter Customer Number or complete the Representative Name section below. If both sections are completed the customer Number will be used for the Representative Information during processing.

Application Data Sheet 37 CFR 1.76	Attorney Docket Number	01997-0358008
	Application Number	
Title of Invention	WIRELESS ENERGY TRANSFER	

Please Select One:	◉ Customer Number	○ US Patent Practitioner	○ Limited Recognition (37 CFR 11.9)
Customer Number	26161		

Domestic Benefit/National Stage Information:

This section allows for the applicant to either claim benefit under 35 U.S.C. 119(e), 120, 121, or 365(c) or indicate National Stage entry from a PCT application. Providing this information in the application data sheet constitutes the specific reference required by 35 U.S.C. 119(e) or 120, and 37 CFR 1.78.

Prior Application Status	Pending		Remove
Application Number	Continuity Type	Prior Application Number	Filing Date (YYYY-MM-DD)
	Continuation of	13477459	2012-05-22
Prior Application Status	Pending		Remove
Application Number	Continuity Type	Prior Application Number	Filing Date (YYYY-MM-DD)
13477459	Continuation of	13036177	2011-02-28
Prior Application Status	Patented		Remove
Application Number	Continuity Type	Prior Application Number	Filing Date (YYYY-MM-DD)
13036177	Continuation of	12437641	2009-05-08
Prior Application Status	Patented		Remove
Application Number	Continuity Type	Prior Application Number	Filing Date (YYYY-MM-DD)
12437641	Continuation of	12055963	2008-03-26
Prior Application Status	Patented		Remove
Application Number	Continuity Type	Prior Application Number	Filing Date (YYYY-MM-DD)
12055963	Continuation in part of	11481077	2006-07-05
Prior Application Status	Expired		Remove
Application Number	Continuity Type	Prior Application Number	Filing Date (YYYY-MM-DD)
11481077	non provisional of	60698442	2005-07-12
Prior Application Status	Expired		Remove
Application Number	Continuity Type	Prior Application Number	Filing Date (YYYY-MM-DD)
12055963	non provisional of	60908383	2007-03-27
Prior Application Status	Expired		Remove
Application Number	Continuity Type	Prior Application Number	Filing Date (YYYY-MM-DD)
12055963	non provisional of	60908666	2007-03-28
Prior Application Status	Pending		Remove
Application Number	Continuity Type	Prior Application Number	Filing Date (YYYY-MM-DD)
12055963	Continuation in part of	PCTUS2007070892	2007-06-11

PTO/AIA/14 (08-12)
Approved for use through 01/31/2014. OMB 0651-0032
U.S. Patent and Trademark Office; U.S. DEPARTMENT OF COMMERCE
Under the Paperwork Reduction Act of 1995, no persons are required to respond to a collection of information unless it contains a valid OMB control number.

Application Data Sheet 37 CFR 1.76	Attorney Docket Number	01997-0358008
	Application Number	
Title of Invention	WIRELESS ENERGY TRANSFER	

Additional Domestic Benefit/National Stage Data may be generated within this form by selecting the **Add** button. Add

Foreign Priority Information:

This section allows for the applicant to claim benefit of foreign priority and to identify any prior foreign application for which priority is not claimed. Providing this information in the application data sheet constitutes the claim for priority as required by 35 U.S.C. 119(b) and 37 CFR 1.55(a).

Remove

Application Number	Country i	Filing Date (YYYY-MM-DD)	Priority Claimed
			◯ Yes ◯ No

Additional Foreign Priority Data may be generated within this form by selecting the **Add** button. Add

Authorization to Permit Access:

☒ Authorization to Permit Access to the Instant Application by the Participating Offices

If checked, the undersigned hereby grants the USPTO authority to provide the European Patent Office (EPO), the Japan Patent Office (JPO), the Korean Intellectual Property Office (KIPO), the World Intellectual Property Office (WIPO), and any other intellectual property offices in which a foreign application claiming priority to the instant patent application is filed access to the instant patent application. See 37 CFR 1.14(c) and (h). This box should not be checked if the applicant does not wish the EPO, JPO, KIPO, WIPO, or other intellectual property office in which a foreign application claiming priority to the instant patent application is filed to have access to the instant patent application.

In accordance with 37 CFR 1.14(h)(3), access will be provided to a copy of the instant patent application with respect to: 1) the instant patent application-as-filed; 2) any foreign application to which the instant patent application claims priority under 35 U.S.C. 119(a)-(d) if a copy of the foreign application that satisfies the certified copy requirement of 37 CFR 1.55 has been filed in the instant patent application; and 3) any U.S. application-as-filed from which benefit is sought in the instant patent application.

In accordance with 37 CFR 1.14(c), access may be provided to information concerning the date of filing this Authorization.

Applicant Information:

Providing assignment information in this section does not substitute for compliance with any requirement of part 3 of Title 37 of CFR to have an assignment recorded by the Office.

PTO/AIA/14 (08-12)
Approved for use through 01/31/2014. OMB 0651-0032
U.S. Patent and Trademark Office; U.S. DEPARTMENT OF COMMERCE
Under the Paperwork Reduction Act of 1995, no persons are required to respond to a collection of information unless it contains a valid OMB control number.

Application Data Sheet 37 CFR 1.76	Attorney Docket Number	01997-0358008
	Application Number	
Title of Invention	WIRELESS ENERGY TRANSFER	

Applicant 1

If the applicant is the inventor (or the remaining joint inventor or inventors under 37 CFR 1.45), this section should not be completed. The information to be provided in this section is the name and address of the legal representative who is the applicant under 37 CFR 1.43; or the name and address of the assignee, person to whom the inventor is under an obligation to assign the invention, or person who otherwise shows sufficient proprietary interest in the matter who is the applicant under 37 CFR 1.46. If the applicant is an applicant under 37 CFR 1.46 (assignee, person to whom the inventor is obligated to assign, or person who otherwise shows sufficient proprietary interest) together with one or more joint inventors, then the joint inventor or inventors who are also the applicant should be identified in this section.

Remove

◯ Assignee	◯ Legal Representative under 35 U.S.C. 117
◯ Person to whom the inventor is obligated to assign.	◯ Person who shows sufficient proprietary interest

If applicant is the legal representative, indicate the authority to file the patent application, the inventor is:

Name of the Deceased or Legally Incapacitated Inventor :	

If the Assignee is an Organization check here. ☒

Organization Name	

Mailing Address Information:

Address 1			
Address 2			
City		**State/Province**	
Country [i]		Postal Code	
Phone Number		Fax Number	
Email Address			

Additional Applicant Data may be generated within this form by selecting the Add button. Add

Signature:

Remove

NOTE: This form must be signed in accordance with 37 CFR 1.33. See 37 CFR 1.4 for signature requirements and certifications

Signature	/Marc M. Wefers Reg. No. 56,842/			Date (YYYY-MM-DD)	2013-03-08
First Name	Marc	Last Name	Wefers	Registration Number	56842

Additional Signature may be generated within this form by selecting the Add button. Add

Application Data Sheet 37 CFR 1.76	Attorney Docket Number	01997-0358008
	Application Number	
Title of Invention	WIRELESS ENERGY TRANSFER	

This collection of information is required by 37 CFR 1.76. The information is required to obtain or retain a benefit by the public which is to file (and by the USPTO to process) an application. Confidentiality is governed by 35 U.S.C. 122 and 37 CFR 1.14. This collection is estimated to take 23 minutes to complete, including gathering, preparing, and submitting the completed application data sheet form to the USPTO. Time will vary depending upon the individual case. Any comments on the amount of time you require to complete this form and/or suggestions for reducing this burden, should be sent to the Chief Information Officer, U.S. Patent and Trademark Office, U.S. Department of Commerce, P.O. Box 1450, Alexandria, VA 22313-1450. DO NOT SEND FEES OR COMPLETED FORMS TO THIS ADDRESS. **SEND TO: Commissioner for Patents, P.O. Box 1450, Alexandria, VA 22313-1450.**

Privacy Act Statement

The Privacy Act of 1974 (P.L. 93-579) requires that you be given certain information in connection with your submission of the attached form related to a patent application or patent. Accordingly, pursuant to the requirements of the Act, please be advised that: (1) the general authority for the collection of this information is 35 U.S.C. 2(b)(2); (2) furnishing of the information solicited is voluntary; and (3) the principal purpose for which the information is used by the U.S. Patent and Trademark Office is to process and/or examine your submission related to a patent application or patent. If you do not furnish the requested information, the U.S. Patent and Trademark Office may not be able to process and/or examine your submission, which may result in termination of proceedings or abandonment of the application or expiration of the patent.

The information provided by you in this form will be subject to the following routine uses:

1. The information on this form will be treated confidentially to the extent allowed under the Freedom of Information Act (5 U.S.C. 552) and the Privacy Act (5 U.S.C. 552a). Records from this system of records may be disclosed to the Department of Justice to determine whether the Freedom of Information Act requires disclosure of these records.

2. A record from this system of records may be disclosed, as a routine use, in the course of presenting evidence to a court, magistrate, or administrative tribunal, including disclosures to opposing counsel in the course of settlement negotiations.

3. A record in this system of records may be disclosed, as a routine use, to a Member of Congress submitting a request involving an individual, to whom the record pertains, when the individual has requested assistance from the Member with respect to the subject matter of the record.

4. A record in this system of records may be disclosed, as a routine use, to a contractor of the Agency having need for the information in order to perform a contract. Recipients of information shall be required to comply with the requirements of the Privacy Act of 1974, as amended, pursuant to 5 U.S.C. 552a(m).

5. A record related to an International Application filed under the Patent Cooperation Treaty in this system of records may be disclosed, as a routine use, to the International Bureau of the World Intellectual Property Organization, pursuant to the Patent Cooperation Treaty.

6. A record in this system of records may be disclosed, as a routine use, to another federal agency for purposes of National Security review (35 U.S.C. 181) and for review pursuant to the Atomic Energy Act (42 U.S.C. 218(c)).

7. A record from this system of records may be disclosed, as a routine use, to the Administrator, General Services, or his/her designee, during an inspection of records conducted by GSA as part of that agency's responsibility to recommend improvements in records management practices and programs, under authority of 44 U.S.C. 2904 and 2906. Such disclosure shall be made in accordance with the GSA regulations governing inspection of records for this purpose, and any other relevant (i.e., GSA or Commerce) directive. Such disclosure shall not be used to make determinations about individuals.

8. A record from this system of records may be disclosed, as a routine use, to the public after either publication of the application pursuant to 35 U.S.C. 122(b) or issuance of a patent pursuant to 35 U.S.C. 151. Further, a record may be disclosed, subject to the limitations of 37 CFR 1.14, as a routine use, to the public if the record was filed in an application which became abandoned or in which the proceedings were terminated and which application is referenced by either a published application, an application open to public inspections or an issued patent.

9. A record from this system of records may be disclosed, as a routine use, to a Federal, State, or local law enforcement agency, if the USPTO becomes aware of a violation or potential violation of law or regulation.

WIRELESS ENERGY TRANSFER

This application is a continuation and claims the benefit of priority under 35 USC § 120 to U.S. Application Serial No. 13/477,459, filed May 22, 2012, which is a continuation of U.S. Application Serial No. 13/036,177, filed February 28, 2011, which is a continuation of U.S. Application Serial No. 12/437,641, filed May 8, 2009, now U.S. Patent No. 8,097,983, which is a continuation of U.S. Application Serial No. 12/055,963 filed March 26, 2008, now U.S. Patent No. 7,825,543, which: 1) is a continuation-in-part of U.S. Utility Patent Application Serial No. 11/481,077, filed July 5, 2006, now U.S. Patent No. 7,741,734, which claims priority to U.S. Provisional Application Serial No. 60/698,442, filed July 12, 2005; (2) pursuant to U.S.C. § 119(e), claims priority to U.S. Provisional Application Serial No. 60/908,383, filed March 27, 2007, and U.S. Provisional Application Serial No. 60/908,666, filed March 28, 2007; and (3) pursuant to U.S.C. § 120, and U.S.C. § 363, is also a continuation-in-part of International Application No. PCT/US2007/070892, filed June 11, 2007. The contents of the prior applications are incorporated herein by reference in their entirety.

STATEMENT AS TO FEDERALLY FUNDED RESEARCH

This invention was made with government support awarded by the National Science Foundation under Grant No. DMR 02-13282. The government has certain rights in this invention.

BACKGROUND

The disclosure relates to wireless energy transfer. Wireless energy transfer may for example, be useful in such applications as providing power to autonomous electrical or electronic devices.

Radiative modes of omni-directional antennas (which work very well for information transfer) are not suitable for such energy transfer, because a vast majority of energy is wasted into free space. Directed radiation modes, using lasers or highly-directional antennas, can be efficiently used for energy transfer, even for long distances (transfer distance $L_{TRANS} \gg L_{DEV}$, where L_{DEV} is the characteristic size of the device and/or

InductEV, Inc.
Exhibit 1031
Page 016

the source), but require existence of an uninterruptible line-of-sight and a complicated tracking system in the case of mobile objects. Some transfer schemes rely on induction, but are typically restricted to very close-range ($L_{TRANS} \ll L_{DEV}$) or low power (~mW) energy transfers.

The rapid development of autonomous electronics of recent years (e.g. laptops, cell-phones, house-hold robots, that all typically rely on chemical energy storage) has led to an increased need for wireless energy transfer.

SUMMARY

The inventors have realized that resonant objects with coupled resonant modes having localized evanescent field patterns may be used for non-radiative wireless energy transfer. Resonant objects tend to couple, while interacting weakly with other off-resonant environmental objects. Typically, using the techniques described below, as the coupling increases, so does the transfer efficiency. In some embodiments, using the below techniques, the energy-transfer rate can be larger than the energy-loss rate. Accordingly, efficient wireless energy-exchange can be achieved between the resonant objects, while suffering only modest transfer and dissipation of energy into other off-resonant objects. The nearly-omnidirectional but stationary (non-lossy) nature of the near field makes this mechanism suitable for mobile wireless receivers. Various embodiments therefore have a variety of possible applications including for example, placing a source (e.g. one connected to the wired electricity network) on the ceiling of a factory room, while devices (robots, vehicles, computers, or similar) are roaming freely within the room. Other applications include power supplies for electric-engine buses and/or hybrid cars and medical implantable devices.

In some embodiments, resonant modes are so-called magnetic resonances, for which most of the energy surrounding the resonant objects is stored in the magnetic field; i.e. there is very little electric field outside of the resonant objects. Since most everyday materials (including animals, plants and humans) are non-magnetic, their interaction with magnetic fields is minimal. This is important both for safety and also to reduce interaction with the extraneous environmental objects.

InductEV, Inc.
Exhibit 1031
Page 017

In one aspect, an apparatus is disclosed for use in wireless energy transfer, which includes a first resonator structure configured to transfer energy with a second resonator structure over a distance *D* greater than a characteristic size L_2 of the second resonator structure. In some embodiments, *D* is also greater than one or more of: a characteristic size L_1 of the first resonator structure, a characteristic thickness T_1 of the first resonator structure, and a characteristic width W_1 of the first resonator structure. The energy transfer is mediated by evanescent-tail coupling of a resonant field of the first resonator structure and a resonant field of the second resonator structure. The apparatus may include any of the following features alone or in combination.

In some embodiments, the first resonator structure is configured to transfer energy to the second resonator structure. In some embodiments, the first resonator structure is configured to receive energy from the second resonator structure. In some embodiments, the apparatus includes the second resonator structure.

In some embodiments, the first resonator structure has a resonant angular frequency ω_1, a Q-factor Q_1, and a resonance width Γ_1, the second resonator structure has a resonant angular frequency ω_2, a Q-factor Q_2, and a resonance width Γ_2, and the energy transfer has a rate κ. In some embodiments, the absolute value of the difference of the angular frequencies ω_1 and ω_2 is smaller than the broader of the resonant widths Γ_1 and Γ_2.

In some embodiments $Q_1 > 100$ and $Q_2 > 100$, $Q_1 > 300$ and $Q_2 > 300$, $Q_1 > 500$ and $Q_2 > 500$, or $Q_1 > 1000$ and $Q_2 > 1000$. In some embodiments, $Q_1 > 100$ or $Q_2 > 100$, $Q_1 > 300$ or $Q_2 > 300$, $Q_1 > 500$ or $Q_2 > 500$, or $Q_1 > 1000$ or $Q_2 > 1000$.

In some embodiments, the coupling to loss ratio $\frac{\kappa}{\sqrt{\Gamma_1\Gamma_2}} > 0.5$, $\frac{\kappa}{\sqrt{\Gamma_1\Gamma_2}} > 1$, $\frac{\kappa}{\sqrt{\Gamma_1\Gamma_2}} > 2$, or $\frac{\kappa}{\sqrt{\Gamma_1\Gamma_2}} > 5$. In some such embodiments, D/L_2 may be as large as 2, as large as 3, as large as 5, as large as 7, or as large as 10.

InductEV, Inc.
Exhibit 1031
Page 018

In some embodiments, $Q_1 > 1000$ and $Q_2 > 1000$, and the coupling to loss ratio $\frac{\kappa}{\sqrt{\Gamma_1\Gamma_2}} > 10$, $\frac{\kappa}{\sqrt{\Gamma_1\Gamma_2}} > 25$, or $\frac{\kappa}{\sqrt{\Gamma_1\Gamma_2}} > 40$. In some such embodiments, D/L_2 may be as large as 2, as large as 3, as large as 5, as large as 7, as large as 10.

In some embodiments, $Q_\kappa = \omega/2\kappa$ is less than about 50, less than about 200, less than about 500, or less than about 1000. In some such embodiments, D/L_2 is as large as 2, as large as 3, as large as 5, as large as 7, or as large as 10.

In some embodiments, the quantity $\kappa/\sqrt{\Gamma_1\Gamma_2}$ is maximized at an angular frequency $\tilde{\omega}$ with a frequency width $\tilde{\Gamma}$ around the maximum, and the absolute value of the difference of the angular frequencies ω_1 and $\tilde{\omega}$ is smaller than the width $\tilde{\Gamma}$, and the absolute value of the difference of the angular frequencies ω_2 and $\tilde{\omega}$ is smaller than the width $\tilde{\Gamma}$.

In some embodiments, the energy transfer operates with an efficiency η_{work} greater than about 1%, greater than about 10%, greater than about 30%, greater than about 50%, or greater than about 80%.

In some embodiments, the energy transfer operates with a radiation loss η_{rad} less that about 10%. In some such embodiments the coupling to loss ratio $\frac{\kappa}{\sqrt{\Gamma_1\Gamma_2}} \geq 0.1$.

In some embodiments, the energy transfer operates with a radiation loss η_{rad} less that about 1%. In some such embodiments, the coupling to loss ratio $\frac{\kappa}{\sqrt{\Gamma_1\Gamma_2}} \geq 1$.

In some embodiments, in the presence of a human at distance of more than 3cm from the surface of either resonant object, the energy transfer operates with a loss to the human η_h of less than about 1%. In some such embodiments the coupling to loss ratio $\frac{\kappa}{\sqrt{\Gamma_1\Gamma_2}} \geq 1$.

In some embodiments, in the presence of a human at distance of more than 10cm from the surface of either resonant object, the energy transfer operates with a loss to the

InductEV, Inc.
Exhibit 1031
Page 019

human η_h of less than about 0.2%. In some such embodiments the coupling to loss ratio $\frac{\kappa}{\sqrt{\Gamma_1\Gamma_2}} \geq 1$.

In some embodiments, during operation, a device coupled to the first or second resonator structure with a coupling rate Γ_{work} receives a usable power P_{work} from the resonator structure.

In some embodiments, P_{work} is greater than about 0.01 Watt, greater than about 0.1 Watt, greater than about 1 Watt, or greater than about 10 Watt.

In some embodiments, if the device is coupled to the first resonator, then $1/2 \leq \left[\left(\Gamma_{\text{work}}/\Gamma_1\right)^2 - 1\right] / \left(\kappa/\sqrt{\Gamma_1\Gamma_2}\right)^2 \leq 2$, or $1/4 \leq \left[\left(\Gamma_{\text{work}}/\Gamma_1\right)^2 - 1\right] / \left(\kappa/\sqrt{\Gamma_1\Gamma_2}\right)^2 \leq 4$, or $1/8 \leq \left[\left(\Gamma_{\text{work}}/\Gamma_1\right)^2 - 1\right] / \left(\kappa/\sqrt{\Gamma_1\Gamma_2}\right)^2 \leq 8$, and, if the device is coupled to the second resonator, then $1/2 \leq \left[\left(\Gamma_{\text{work}}/\Gamma_2\right)^2 - 1\right] / \left(\kappa/\sqrt{\Gamma_1\Gamma_2}\right)^2 \leq 2$, or $1/4 \leq \left[\left(\Gamma_{\text{work}}/\Gamma_2\right)^2 - 1\right] / \left(\kappa/\sqrt{\Gamma_1\Gamma_2}\right)^2 \leq 4$, or $1/8 \leq \left[\left(\Gamma_{\text{work}}/\Gamma_2\right)^2 - 1\right] / \left(\kappa/\sqrt{\Gamma_1\Gamma_2}\right)^2 \leq 8$.

In some embodiments, the device includes an electrical or electronic device. In some embodiments, the device includes a robot (e.g. a conventional robot or a nano-robot). In some embodiments, the device includes a mobile electronic device (e.g. a telephone, or a cell-phone, or a computer, or a laptop computer, or a personal digital assistant (PDA)). In some embodiments, the device includes an electronic device that receives information wirelessly (e.g. a wireless keyboard, or a wireless mouse, or a wireless computer screen, or a wireless television screen). In some embodiments, the device includes a medical device configured to be implanted in a patient (e.g. an artificial organ, or implant configured to deliver medicine). In some embodiments, the device includes a sensor. In some embodiments, the device includes a vehicle (e.g. a transportation vehicle, or an autonomous vehicle).

In some embodiments, the apparatus further includes the device.

InductEV, Inc.
Exhibit 1031
Page 020

In some embodiments, during operation, a power supply coupled to the first or second resonator structure with a coupling rate Γ_{supply} drives the resonator structure at a frequency f and supplies power P_{total}. In some embodiments, the absolute value of the difference of the angular frequencies $\omega = 2\pi f$ and ω_1 is smaller than the resonant width Γ_1, and the absolute value of the difference of the angular frequencies $\omega = 2\pi f$ and ω_2 is smaller than the resonant width Γ_2. In some embodiments, f is about the optimum efficiency frequency.

In some embodiments, if the power supply is coupled to the first resonator, then $1/2 \le \left[\left(\Gamma_{supply}/\Gamma_1\right)^2 - 1\right] / \left(\kappa/\sqrt{\Gamma_1\Gamma_2}\right)^2 \le 2$, or $1/4 \le \left[\left(\Gamma_{supply}/\Gamma_1\right)^2 - 1\right] / \left(\kappa/\sqrt{\Gamma_1\Gamma_2}\right)^2 \le 4$, or $1/8 \le \left[\left(\Gamma_{supply}/\Gamma_1\right)^2 - 1\right] / \left(\kappa/\sqrt{\Gamma_1\Gamma_2}\right)^2 \le 8$, and, if the power supply is coupled to the second resonator, then $1/2 \le \left[\left(\Gamma_{supply}/\Gamma_2\right)^2 - 1\right] / \left(\kappa/\sqrt{\Gamma_1\Gamma_2}\right)^2 \le 2$, or $1/4 \le \left[\left(\Gamma_{supply}/\Gamma_2\right)^2 - 1\right] / \left(\kappa/\sqrt{\Gamma_1\Gamma_2}\right)^2 \le 4$, or $1/8 \le \left[\left(\Gamma_{supply}/\Gamma_2\right)^2 - 1\right] / \left(\kappa/\sqrt{\Gamma_1\Gamma_2}\right)^2 \le 8$.

In some embodiments, the apparatus further includes the power source.

In some embodiments, the resonant fields are electromagnetic. In some embodiments, f is about 50 GHz or less, about 1 GHz or less, about 100 MHz or less, about 10 MHz or less, about 1 MHz or less, about 100 KHz or less, or about 10 kHz or less. In some embodiments, f is about 50 GHz or greater, about 1 GHz or greater, about 100 MHz or greater, about 10 MHz or greater, about 1 MHz or greater, about 100 kHz or greater, or about 10 kHz or greater. In some embodiments, f is within one of the frequency bands specially assigned for industrial, scientific and medical (ISM) equipment.

In some embodiments, the resonant fields are primarily magnetic in the area outside of the resonant objects. In some such embodiments, the ratio of the average electric field energy to average magnetic filed energy at a distance D_p from the closest resonant object is less than 0.01, or less than 0.1. In some embodiments, L_R is the characteristic size of the closest resonant object and D_p / L_R is less than 1.5, 3, 5, 7, or 10.

InductEV, Inc.
Exhibit 1031
Page 021

In some embodiments, the resonant fields are acoustic. In some embodiments, one or more of the resonant fields include a whispering gallery mode of one of the resonant structures.

In some embodiments, one of the first and second resonator structures includes a self resonant coil of conducting wire, conducting Litz wire, or conducting ribbon. In some embodiments, both of the first and second resonator structures include self resonant coils of conducting wire, conducting Litz wire, or conducting ribbon. In some embodiments, both of the first and second resonator structures include self resonant coils of conducting wire or conducting Litz wire or conducting ribbon, and $Q_1 > 300$ and $Q_2 > 300$.

In some embodiments, one or more of the self resonant conductive wire coils include a wire of length *l* and cross section radius *a* wound into a helical coil of radius *r*, height *h* and number of turns *N*. In some embodiments, $N = \sqrt{l^2 - h^2} / 2\pi r$.

In some embodiments, for each resonant structure *r* is about 30cm, *h* is about 20cm, *a* is about 3mm and *N* is about 5.25, and, during operation, a power source coupled to the first or second resonator structure drives the resonator structure at a frequency f. In some embodiments, f is about 10.6 MHz. In some such embodiments, the coupling to loss ratio $\frac{\kappa}{\sqrt{\Gamma_1\Gamma_2}} \geq 40$, $\frac{\kappa}{\sqrt{\Gamma_1\Gamma_2}} \geq 15$, or $\frac{\kappa}{\sqrt{\Gamma_1\Gamma_2}} \geq 5$, or $\frac{\kappa}{\sqrt{\Gamma_1\Gamma_2}} \geq 1$. In some such embodiments D / L_R is as large as about 2, 3, 5, or 8.

In some embodiments, for each resonant structure *r* is about 30cm, *h* is about 20cm, *a* is about 1cm and *N* is about 4, and, during operation, a power source coupled to the first or second resonator structure drives the resonator structure at a frequency f. In some embodiments, f is about 13.4 MHz. In some such embodiments, the coupling to loss ratio $\frac{\kappa}{\sqrt{\Gamma_1\Gamma_2}} \geq 70$, $\frac{\kappa}{\sqrt{\Gamma_1\Gamma_2}} \geq 19$, or $\frac{\kappa}{\sqrt{\Gamma_1\Gamma_2}} \geq 8$, or $\frac{\kappa}{\sqrt{\Gamma_1\Gamma_2}} \geq 3$. In some such embodiments D / L_R is as large as about 3, 5, 7, or 10.

In some embodiments, for each resonant structure *r* is about 10cm, *h* is about 3cm, *a* is about 2mm and *N* is about 6, and, during operation, a power source coupled to

the first or second resonator structure drives the resonator structure at a frequency f. In some embodiments, f is about 21.4 MHz. In some such embodiments, the coupling to loss ratio $\frac{\kappa}{\sqrt{\Gamma_1\Gamma_2}} \geq 59$, $\frac{\kappa}{\sqrt{\Gamma_1\Gamma_2}} \geq 15$, or $\frac{\kappa}{\sqrt{\Gamma_1\Gamma_2}} \geq 6$, or $\frac{\kappa}{\sqrt{\Gamma_1\Gamma_2}} \geq 2$. In some such embodiments D/L_R is as large as about 3, 5, 7, or 10.

In some embodiments, one of the first and second resonator structures includes a capacitively loaded loop or coil of conducting wire, conducting Litz wire, or conducting ribbon. In some embodiments, both of the first and second resonator structures include capacitively loaded loops or coils of conducting wire, conducting Litz wire, or conducting ribbon. In some embodiments, both of the first and second resonator structures include capacitively loaded loops or coils of conducting wire or conducting Litz wire or conducting ribbon, and $Q_1 > 300$ and $Q_2 > 300$.

In some embodiments, the characteristic size L_R of the resonator structure receiving energy from the other resonator structure is less than about 1 cm and the width of the conducting wire or Litz wire or ribbon of said object is less than about 1mm, and, during operation, a power source coupled to the first or second resonator structure drives the resonator structure at a frequency f. In some embodiments, f is about 380MHz. In some such embodiments, the coupling to loss ratio $\frac{\kappa}{\sqrt{\Gamma_1\Gamma_2}} \geq 14.9$, $\frac{\kappa}{\sqrt{\Gamma_1\Gamma_2}} \geq 3.2$, $\frac{\kappa}{\sqrt{\Gamma_1\Gamma_2}} \geq 1.2$, or $\frac{\kappa}{\sqrt{\Gamma_1\Gamma_2}} \geq 0.4$. In some such embodiments, D/L_R is as large as about 3, about 5, about 7, or about 10.

In some embodiments, the characteristic size of the resonator structure receiving energy from the other resonator structure L_R is less than about 10 cm and the width of the conducting wire or Litz wire or ribbon of said object is less than about 1cm, and, during operation, a power source coupled to the first or second resonator structure drives the resonator structure at a frequency f. In some embodiments, f is about 43 MHz. In some such embodiments, the coupling to loss ratio $\frac{\kappa}{\sqrt{\Gamma_1\Gamma_2}} \geq 15.9$, $\frac{\kappa}{\sqrt{\Gamma_1\Gamma_2}} \geq 4.3$,

InductEV, Inc.
Exhibit 1031
Page 023

$\frac{\kappa}{\sqrt{\Gamma_1\Gamma_2}} \geq 1.8$, or $\frac{\kappa}{\sqrt{\Gamma_1\Gamma_2}} \geq 0.7$. In some such embodiments, D/L_R is as large as about 3, about 5, about 7, or about 10.

In some embodiments, the characteristic size L_R of the resonator structure receiving energy from the other resonator structure is less than about 30 cm and the width of the conducting wire or Litz wire or ribbon of said object is less than about 5cm, and, during operation, a power source coupled to the first or second resonator structure drives the resonator structure at a frequency f. In some such embodiments, f is about 9 MHz. In some such embodiments, the coupling to loss ratio $\frac{\kappa}{\sqrt{\Gamma_1\Gamma_2}} \geq 67.4$, $\frac{\kappa}{\sqrt{\Gamma_1\Gamma_2}} \geq 17.8$, $\frac{\kappa}{\sqrt{\Gamma_1\Gamma_2}} \geq 7.1$, or $\frac{\kappa}{\sqrt{\Gamma_1\Gamma_2}} \geq 2.7$. In some such embodiments, D/L_R is as large as about 3, about 5, about 7, or about 10.

In some embodiments, the characteristic size of the resonator structure receiving energy from the other resonator structure L_R is less than about 30 cm and the width of the conducting wire or Litz wire or ribbon of said object is less than about 5mm, and, during operation, a power source coupled to the first or second resonator structure drives the resonator structure at a frequency f. In some embodiments, f is about 17 MHz. In some such embodiments, the coupling to loss ratio $\frac{\kappa}{\sqrt{\Gamma_1\Gamma_2}} \geq 6.3$, $\frac{\kappa}{\sqrt{\Gamma_1\Gamma_2}} \geq 1.3$, $\frac{\kappa}{\sqrt{\Gamma_1\Gamma_2}} \geq 0.5$., or $\frac{\kappa}{\sqrt{\Gamma_1\Gamma_2}} \geq 0.2$. In some such embodiments, D/L_R is as large as about 3, about 5, about 7, or about 10.

In some embodiments, the characteristic size L_R of the resonator structure receiving energy from the other resonator structure is less than about 1m, and the width of the conducting wire or Litz wire or ribbon of said object is less than about 1cm, and, during operation, a power source coupled to the first or second resonator structure drives the resonator structure at a frequency f. In some embodiments, f is about 5MHz. In some such embodiments, the coupling to loss ratio $\frac{\kappa}{\sqrt{\Gamma_1\Gamma_2}} \geq 6.8$, $\frac{\kappa}{\sqrt{\Gamma_1\Gamma_2}} \geq 1.4$,

$\frac{\kappa}{\sqrt{\Gamma_1\Gamma_2}} \geq 0.5$, $\frac{\kappa}{\sqrt{\Gamma_1\Gamma_2}} \geq 0.2$. In some such embodiments, D/L_R is as large as about 3, about 5, about 7, or about 10.

In some embodiments, during operation, one of the resonator structures receives a usable power P_w from the other resonator structure, an electrical current I_s flows in the resonator structure which is transferring energy to the other resonant structure, and the ratio $\frac{I_s}{\sqrt{P_w}}$ is less than about 5 $Amps/\sqrt{Watts}$ or less than about 2 $Amps/\sqrt{Watts}$. In some embodiments, during operation, one of the resonator structures receives a usable power P_w from the other resonator structure, a voltage difference V_s appears across the capacitive element of the first resonator structure, and the ratio $\frac{V_s}{\sqrt{P_w}}$ is less than about 2000 $Volts/\sqrt{Watts}$ or less than about 4000 $Volts/\sqrt{Watts}$.

In some embodiments, one of the first and second resonator structures includes a inductively loaded rod of conducting wire or conducting Litz wire or conducting ribbon. In some embodiments, both of the first and second resonator structures include inductively loaded rods of conducting wire or conducting Litz wire or conducting ribbon. In some embodiments, both of the first and second resonator structures include inductively loaded rods of conducting wire or conducting Litz wire or conducting ribbon, and $Q_1 > 300$ and $Q_2 > 300$.

In some embodiments, the characteristic size of the resonator structure receiving energy from the other resonator structure L_R is less than about 10 cm and the width of the conducting wire or Litz wire or ribbon of said object is less than about 1cm, and, during operation, a power source coupled to the first or second resonator structure drives the resonator structure at a frequency f. In some embodiments, f is about 14 MHz. In some such embodiments, the coupling to loss ratio $\frac{\kappa}{\sqrt{\Gamma_1\Gamma_2}} \geq 32$, $\frac{\kappa}{\sqrt{\Gamma_1\Gamma_2}} \geq 5.8$, $\frac{\kappa}{\sqrt{\Gamma_1\Gamma_2}} \geq 2$, or $\frac{\kappa}{\sqrt{\Gamma_1\Gamma_2}} \geq 0.6$. In some such embodiments, D/L_R is as large as about 3, about 5, about 7, or about 10.

InductEV, Inc.
Exhibit 1031
Page 025

In some embodiments, the characteristic size L_R of the resonator structure receiving energy from the other resonator structure is less than about 30 cm and the width of the conducting wire or Litz wire or ribbon of said object is less than about 5cm, and, during operation, a power source coupled to the first or second resonator structure drives the resonator structure at a frequency f. In some such embodiments, f is about 2.5 MHz. In some such embodiments, the coupling to loss ratio $\frac{\kappa}{\sqrt{\Gamma_1\Gamma_2}} \geq 105$, $\frac{\kappa}{\sqrt{\Gamma_1\Gamma_2}} \geq 19$, $\frac{\kappa}{\sqrt{\Gamma_1\Gamma_2}} \geq 6.6$, or $\frac{\kappa}{\sqrt{\Gamma_1\Gamma_2}} \geq 2.2$. In some such embodiments, D/L_R is as large as about 3, about 5, about 7, or about 10.

In some embodiments, one of the first and second resonator structures includes a dielectric disk. In some embodiments, both of the first and second resonator structures include dielectric disks. In some embodiments, both of the first and second resonator structures include dielectric disks, and $Q_1 > 300$ and $Q_2 > 300$.

In some embodiments, the characteristic size of the resonator structure receiving energy from the other resonator structure is L_R and the real part of the permittivity of said resonator structure ε is less than about 150. In some such embodiments, the coupling to loss ratio $\frac{\kappa}{\sqrt{\Gamma_1\Gamma_2}} \geq 42.4$, $\frac{\kappa}{\sqrt{\Gamma_1\Gamma_2}} \geq 6.5$, $\frac{\kappa}{\sqrt{\Gamma_1\Gamma_2}} \geq 2.3$, $\frac{\kappa}{\sqrt{\Gamma_1\Gamma_2}} \geq 0.5$. In some such embodiments, D/L_R is as large as about 3, about 5, about 7, or about 10.

In some embodiments, the characteristic size of the resonator structure receiving energy from the other resonator structure is L_R and the real part of the permittivity of said resonator structure ε is less than about 65. In some such embodiments, the coupling to loss ratio $\frac{\kappa}{\sqrt{\Gamma_1\Gamma_2}} \geq 30.9$, $\frac{\kappa}{\sqrt{\Gamma_1\Gamma_2}} \geq 2.3$, or $\frac{\kappa}{\sqrt{\Gamma_1\Gamma_2}} \geq 0.5$. In some such embodiments, D/L_R is as large as about 3, about 5, about 7.

In some embodiments, at least one of the first and second resonator structures includes one of: a dielectric material, a metallic material, a metallodielectric object, a plasmonic material, a plasmonodielectric object, a superconducting material.

InductEV, Inc.
Exhibit 1031
Page 026

In some embodiments, at least one of the resonators has a quality factor greater than about 5000, or greater than about 10000.

In some embodiments, the apparatus also includes a third resonator structure configured to transfer energy with one or more of the first and second resonator structures, where the energy transfer between the third resonator structure and the one or more of the first and second resonator structures is mediated by evanescent-tail coupling of the resonant field of the one or more of the first and second resonator structures and a resonant field of the third resonator structure.

In some embodiments, the third resonator structure is configured to transfer energy to one or more of the first and second resonator structures.

In some embodiments, the third resonator structure is configured to receive energy from one or more of the first and second resonator structures.

In some embodiments, the third resonator structure is configured to receive energy from one of the first and second resonator structures and transfer energy to the other one of the first and second resonator structures.

Some embodiments include a mechanism for, during operation, maintaining the resonant frequency of one or more of the resonant objects. In some embodiments, the feedback mechanism comprises an oscillator with a fixed frequency and is configured to adjust the resonant frequency of the one or more resonant objects to be about equal to the fixed frequency. In some embodiments, the feedback mechanism is configured to monitor an efficiency of the energy transfer, and adjust the resonant frequency of the one or more resonant objects to maximize the efficiency.

In another aspect, a method of wireless energy transfer is disclosed, which method includes providing a first resonator structure and transferring energy with a second resonator structure over a distance D greater than a characteristic size L_2 of the second resonator structure. In some embodiments, D is also greater than one or more of: a characteristic size L_1 of the first resonator structure, a characteristic thickness T_1 of the first resonator structure, and a characteristic width W_1 of the first resonator structure. The energy transfer is mediated by evanescent-tail coupling of a resonant field of the first resonator structure and a resonant field of the second resonator structure.

InductEV, Inc.
Exhibit 1031
Page 027

In some embodiments, the first resonator structure is configured to transfer energy to the second resonator structure. In some embodiments, the first resonator structure is configured to receive energy from the second resonator structure.

In some embodiments, the first resonator structure has a resonant angular frequency ω_1, a Q-factor Q_1, and a resonance width Γ_1, the second resonator structure has a resonant angular frequency ω_2, a Q-factor Q_2, and a resonance width Γ_2, and the energy transfer has a rate κ. In some embodiments, the absolute value of the difference of the angular frequencies ω_1 and ω_2 is smaller than the broader of the resonant widths Γ_1 and Γ_2.

In some embodiments, the coupling to loss ratio $\frac{\kappa}{\sqrt{\Gamma_1\Gamma_2}} > 0.5$, $\frac{\kappa}{\sqrt{\Gamma_1\Gamma_2}} > 1$, $\frac{\kappa}{\sqrt{\Gamma_1\Gamma_2}} > 2$, or $\frac{\kappa}{\sqrt{\Gamma_1\Gamma_2}} > 5$. In some such embodiments, D/L_2 may be as large as 2, as large as 3, as large as 5, as large as 7, or as large as 10.

In another aspect, an apparatus is disclosed for use in wireless information transfer which includes a first resonator structure configured to transfer information by transferring energy with a second resonator structure over a distance D greater than a characteristic size L_2 of the second resonator structure. In some embodiments, D is also greater than one or more of: a characteristic size L_1 of the first resonator structure, a characteristic thickness T_1 of the first resonator structure, and a characteristic width W_1 of the first resonator structure. The energy transfer is mediated by evanescent-tail coupling of a resonant field of the first resonator structure and a resonant field of the second resonator structure.

In some embodiments, the first resonator structure is configured to transfer energy to the second resonator structure. In some embodiments, the first resonator structure is configured to receive energy from the second resonator structure. In some embodiments the apparatus includes, the second resonator structure.

In some embodiments, the first resonator structure has a resonant angular frequency ω_1, a Q-factor Q_1, and a resonance width Γ_1, the second resonator structure

InductEV, Inc.
Exhibit 1031
Page 028

has a resonant angular frequency ω_2, a Q-factor Q_2, and a resonance width Γ_2, and the energy transfer has a rate κ. In some embodiments, the absolute value of the difference of the angular frequencies ω_1 and ω_2 is smaller than the broader of the resonant widths Γ_1 and Γ_2.

In some embodiments, the coupling to loss ratio $\frac{\kappa}{\sqrt{\Gamma_1\Gamma_2}} > 0.5$, $\frac{\kappa}{\sqrt{\Gamma_1\Gamma_2}} > 1$, $\frac{\kappa}{\sqrt{\Gamma_1\Gamma_2}} > 2$, or $\frac{\kappa}{\sqrt{\Gamma_1\Gamma_2}} > 5$. In some such embodiments, D/L_2 may be as large as 2, as large as 3, as large as 5, as large as 7, or as large as 10.

In another aspect, a method of wireless information transfer is disclosed, which method includes providing a first resonator structure and transferring information by transferring energy with a second resonator structure over a distance D greater than a characteristic size L_2 of the second resonator structure. In some embodiments, D is also greater than one or more of: a characteristic size L_1 of the first resonator structure, a characteristic thickness T_1 of the first resonator structure, and a characteristic width W_1 of the first resonator structure. The energy transfer is mediated by evanescent-tail coupling of a resonant field of the first resonator structure and a resonant field of the second resonator structure.

In some embodiments, the first resonator structure is configured to transfer energy to the second resonator structure. In some embodiments, the first resonator structure is configured to receive energy from the second resonator structure.

In some embodiments, the first resonator structure has a resonant angular frequency ω_1, a Q-factor Q_1, and a resonance width Γ_1, the second resonator structure has a resonant angular frequency ω_2, a Q-factor Q_2, and a resonance width Γ_2, and the energy transfer has a rate κ. In some embodiments, the absolute value of the difference of the angular frequencies ω_1 and ω_2 is smaller than the broader of the resonant widths Γ_1 and Γ_2.

InductEV, Inc.
Exhibit 1031
Page 029

In some embodiments, the coupling to loss ratio $\frac{\kappa}{\sqrt{\Gamma_1\Gamma_2}} > 0.5$, $\frac{\kappa}{\sqrt{\Gamma_1\Gamma_2}} > 1$, $\frac{\kappa}{\sqrt{\Gamma_1\Gamma_2}} > 2$, or $\frac{\kappa}{\sqrt{\Gamma_1\Gamma_2}} > 5$. In some such embodiments, D/L_2 may be as large as 2, as large as 3, as large as 5, as large as 7, or as large as 10.

It is to be understood that the characteristic size of an object is equal to the radius of the smallest sphere which can fit around the entire object. The characteristic thickness of an object is, when placed on a flat surface in any arbitrary configuration, the smallest possible height of the highest point of the object above a flat surface. The characteristic width of an object is the radius of the smallest possible circle that the object can pass through while traveling in a straight line. For example, the characteristic width of a cylindrical object is the radius of the cylinder.

The distance D over which the energy transfer between two resonant objects occurs is the distance between the respective centers of the smallest spheres which can fit around the entirety of each object. However, when considering the distance between a human and a resonant object, the distance is to be measured from the outer surface of the human to the outer surface of the sphere.

As described in detail below, non-radiative energy transfer refers to energy transfer effected primarily through the localized near field, and, at most, secondarily through the radiative portion of the field.

It is to be understood that an evanescent tail of a resonant object is the decaying non-radiative portion of a resonant field localized at the object. The decay may take any functional form including, for example, an exponential decay or power law decay.

The optimum efficiency frequency of a wireless energy transfer system is the frequency at which the figure of merit $\frac{\kappa}{\sqrt{\Gamma_1\Gamma_2}}$ is maximized, all other factors held constant.

The resonant width (Γ) refers to the width of an object's resonance due to object's intrinsic losses (e.g. loss to absorption, radiation, etc.).

It is to be understood that a Q-factor (Q) is a factor that compares the time constant for decay of an oscillating system's amplitude to its oscillation period. For a

InductEV, Inc.
Exhibit 1031
Page 030

given resonator mode with angular frequency ω and resonant width Γ, the Q-factor $Q = \omega / 2\Gamma$.

The energy transfer rate (κ) refers to the rate of energy transfer from one resonator to another. In the coupled mode description described below it is the coupling constant between the resonators.

It is to be understood that $Q_\kappa = \omega / 2\kappa$.

Unless otherwise defined, all technical and scientific terms used herein have the same meaning as commonly understood by one of ordinary skill in the art to which this invention belongs. In case of conflict with publications, patent applications, patents, and other references mentioned incorporated herein by reference, the present specification, including definitions, will control.

Various embodiments may include any of the above features, alone or in combination. Other features, objects, and advantages of the disclosure will be apparent from the following detailed description.

Other features, objects, and advantages of the disclosure will be apparent from the following detailed description.

BRIEF DESCRIPTION OF THE DRAWINGS

Fig. 1 shows a schematic of a wireless energy transfer scheme.

Fig. 2 shows an example of a self-resonant conducting-wire coil.

Fig. 3 shows a wireless energy transfer scheme featuring two self-resonant conducting-wire coils

Fig. 4 shows an example of a capacitively loaded conducting-wire coil, and illustrates the surrounding field.

Fig. 5 shows a wireless energy transfer scheme featuring two capacitively loaded conducting-wire coils, and illustrates the surrounding field.

Fig. 6 shows an example of a resonant dielectric disk, and illustrates the surrounding field.

Fig. 7 shows a wireless energy transfer scheme featuring two resonant dielectric disks, and illustrates the surrounding field.

Figs. 8a and 8b show schematics for frequency control mechanisms.

InductEV, Inc.
Exhibit 1031
Page 031

Figs. 9a through 9c illustrate a wireless energy transfer scheme in the presence of various extraneous objects.

Fig. 10 illustrates a circuit model for wireless energy transfer.

Fig. 11 illustrates the efficiency of a wireless energy transfer scheme.

Fig. 12 illustrates parametric dependences of a wireless energy transfer scheme.

Fig. 13 plots the parametric dependences of a wireless energy transfer scheme.

Fig. 14 is a schematic of an experimental system demonstrating wireless energy transfer.

Figs 15-17. Plot experiment results for the system shown schematically in Fig. 14.

DETAILED DESCRIPTION

Fig. 1 shows a schematic that generally describes one embodiment of the invention, in which energy is transferred wirelessly between two resonant objects.

Referring to Fig. 1, energy is transferred, over a distance *D*, between a resonant source object having a characteristic size L_1 and a resonant device object of characteristic size L_2. Both objects are resonant objects. The source object is connected to a power supply (not shown), and the device object is connected to a power consuming device (e.g. a load resistor, not shown). Energy is provided by the power supply to the source object, transferred wirelessly and non-radiatively from the source object to the device object, and consumed by the power consuming device. The wireless non-radiative energy transfer is performed using the field (e.g. the electromagnetic field or acoustic field) of the system of two resonant objects. For simplicity, in the following we will assume that field is the electromagnetic field.

It is to be understood that while two resonant objects are shown in the embodiment of Fig. 1, and in many of the examples below, other embodiments may feature 3 or more resonant objects. For example, in some embodiments a single source object can transfer energy to multiple device objects. Similarly, in some embodiments multiple sources can transfer energy to one or more device objects. For example, as explained at in the paragraph bridging pages 4-5 of U.S. Provisional Application No. 60/698,442 to which the present application claims benefit and which is incorporated by reference above, for certain applications having uneven power transfer to the device

object as the distance between the device and the source changes, multiple sources can be strategically placed to alleviate the problem, and/or the peak amplitude of the source can be dynamically adjusted. Furthermore, in some embodiments energy may be transferred from a first device to a second, and then from the second device to the third, and so forth.

Initially, we present a theoretical framework for understanding non-radiative wireless energy transfer. Note however that it is to be understood that the scope of the invention is not bound by theory.

Coupled Mode Theory

An appropriate analytical framework for modeling the resonant energy-exchange between two resonant objects 1 and 2 is that of "coupled-mode theory" (CMT). The field of the system of two resonant objects 1 and 2 is approximated by $\mathbf{F}(\mathbf{r},t) \approx a_1(t)\mathbf{F}_1(\mathbf{r}) + a_2(t)\mathbf{F}_2(\mathbf{r})$, where $\mathbf{F}_{1,2}(\mathbf{r})$ are the eigenmodes of 1 and 2 alone, normalized to unity energy, and the field amplitudes $a_{1,2}(t)$ are defined so that $|a_{1,2}(t)|^2$ is equal to the energy stored inside the objects 1 and 2 respectively. Then, the field amplitudes can be shown to satisfy, to lowest order:

$$\begin{aligned} \frac{da_1}{dt} &= -i\left(\omega_1 - i\Gamma_1\right)a_1 + i\kappa a_2 \\ \frac{da_2}{dt} &= -i\left(\omega_2 - i\Gamma_2\right)a_2 + i\kappa a_1 \end{aligned}, \qquad (1)$$

where $\omega_{1,2}$ are the individual angular eigenfrequencies of the eigenmodes, $\Gamma_{1,2}$ are the resonance widths due to the objects' intrinsic (absorption, radiation etc.) losses, and κ is the coupling coefficient. Eqs.(1) show that at exact resonance ($\omega_1=\omega_2$ and $\Gamma_1=\Gamma_2$), the eigenmodes of the combined system are split by 2κ; the energy exchange between the two objects takes place in time $\sim\pi/2\kappa$ and is nearly perfect, apart for losses, which are minimal when the coupling rate is much faster than all loss rates ($\kappa \gg \Gamma_{1,2}$). The coupling to loss ratio $\kappa/\sqrt{\Gamma_1\Gamma_2}$ serves as a figure-of-merit in evaluating a system used for wireless energy-transfer, along with the distance over which this ratio can be achieved. The regime $\kappa/\sqrt{\Gamma_1\Gamma_2} \gg 1$ is called "strong-coupling" regime.

In some embodiments, the energy-transfer application preferably uses resonant modes of high $Q=\omega/2\Gamma$, corresponding to low (i.e. slow) intrinsic-loss rates Γ. This condition may be satisfied where the coupling is implemented using, not the lossy radiative far-field, but the evanescent (non-lossy) stationary near-field.

To implement an energy-transfer scheme, usually finite objects, namely ones that are topologically surrounded everywhere by air, are more appropriate. Unfortunately, objects of finite extent cannot support electromagnetic states that are exponentially decaying in *all* directions in air, since, from Maxwell's Equations in free space: $\vec{k}^2=\omega^2/c^2$ where $\vec{k}$ is the wave vector, ω the angular frequency, and c the speed of light. Because of this, one can show that they cannot support states of infinite Q. However, very long-lived (so-called "high-Q") states can be found, whose tails display the needed exponential or exponential-like decay away from the resonant object over long enough distances before they turn oscillatory (radiative). The limiting surface, where this change in the field behavior happens, is called the "radiation caustic", and, for the wireless energy-transfer scheme to be based on the near field rather than the far/radiation field, the distance between the coupled objects must be such that one lies within the radiation caustic of the other.

Furthermore, in some embodiments, small $Q_\kappa=\omega/2\kappa$ corresponding to strong (i.e. fast) coupling rate κ is preferred over distances larger than the characteristic sizes of the objects. Therefore, since the extent of the near-field into the area surrounding a finite-sized resonant object is set typically by the wavelength, in some embodiments, this mid-range non-radiative coupling can be achieved using resonant objects of subwavelength size, and thus significantly longer evanescent field-tails. As will be seen in examples later on, such subwavelength resonances can often be accompanied with a high Q, so this will typically be the appropriate choice for the possibly-mobile resonant device-object. Note, though, that in some embodiments, the resonant source-object will be immobile and thus less restricted in its allowed geometry and size, which can be therefore chosen large enough that the near-field extent is not limited by the wavelength. Objects of nearly infinite extent, such as dielectric waveguides, can support guided modes whose

evanescent tails are decaying exponentially in the direction away from the object, slowly if tuned close to cutoff, and can have nearly infinite Q.

In the following, we describe several examples of systems suitable for energy transfer of the type described above. We will demonstrate how to compute the CMT parameters $\omega_{1,2}$, $Q_{1,2}$ and Q_κ described above and how to choose these parameters for particular embodiments in order to produce a desirable figure-of-merit $\kappa/\sqrt{\Gamma_1\Gamma_2} = \sqrt{Q_1Q_2}/Q_\kappa$. In particular, this figure of merit is typically maximized when $\omega_{1,2}$ are tuned to a particular angular frequency $\tilde{\omega}$, thus, if $\tilde{\Gamma}$ is half the angular-frequency width for which $\sqrt{Q_1Q_2}/Q_\kappa$ is above half its maximum value at $\tilde{\omega}$, the angular eigenfrequencies $\omega_{1,2}$ should typically be tuned to be close to $\tilde{\omega}$ to within the width $\tilde{\Gamma}$.

In addition, as described below, $Q_{1,2}$ can sometimes be limited not from intrinsic loss mechanisms but from external perturbations. In those cases, producing a desirable figure-of-merit translates to reducing Q_κ (i.e. increasing the coupling). Accordingly we will demonstrate how, for particular embodiments, to reduce Q_κ.

Self-resonant conducting coils

In some embodiments, one or more of the resonant objects are self-resonant conducting coils. Referring to Fig. 2, a conducting wire of length *l* and cross-sectional radius *a* is wound into a helical coil of radius *r* and height *h* (namely with $N = \sqrt{l^2 - h^2}/2\pi r$ number of turns), surrounded by air. As described below, the wire has distributed inductance and distributed capacitance, and therefore it supports a resonant mode of angular frequency ω. The nature of the resonance lies in the periodic exchange of energy from the electric field within the capacitance of the coil, due to the charge distribution $\rho(\mathbf{x})$ across it, to the magnetic field in free space, due to the current distribution $\mathbf{j}(\mathbf{x})$ in the wire. In particular, the charge conservation equation $\nabla \cdot \mathbf{j} = i\omega\rho$ implies that: (i) this periodic exchange is accompanied by a $\pi/2$ phase-shift between the

InductEV, Inc.
Exhibit 1031
Page 035

current and the charge density profiles, namely the energy U contained in the coil is at certain points in time completely due to the current and at other points in time completely due to the charge, and (ii) if $\rho_l(x)$ and $I(x)$ are respectively the linear charge and current densities in the wire, where x runs along the wire, $q_o = \frac{1}{2}\int dx\left|\rho_l(x)\right|$ is the maximum amount of positive charge accumulated in one side of the coil (where an equal amount of negative charge always also accumulates in the other side to make the system neutral) and $I_o = \max\left\{\left|I(x)\right|\right\}$ is the maximum positive value of the linear current distribution, then $I_o = \omega q_o$. Then, one can *define* an effective total inductance L and an effective total capacitance C of the coil through the amount of energy U inside its resonant mode:

$$U \equiv \frac{1}{2} I_o^2 L \Rightarrow L = \frac{\mu_o}{4\pi I_o^2}\iint d\mathbf{x}d\mathbf{x}'\frac{\mathbf{j}(\mathbf{x})\cdot\mathbf{j}(\mathbf{x}')}{|\mathbf{x}-\mathbf{x}'|}, \tag{2}$$

$$U \equiv \frac{1}{2} q_o^2 \frac{1}{C} \Rightarrow \frac{1}{C} = \frac{1}{4\pi\varepsilon_o q_o^2}\iint d\mathbf{x}d\mathbf{x}'\frac{\rho(\mathbf{x})\cdot\rho(\mathbf{x}')}{|\mathbf{x}-\mathbf{x}'|}, \tag{3}$$

where μ_o and ε_o are the magnetic permeability and electric permittivity of free space. With these definitions, the resonant angular frequency and the effective impedance are given by the common formulas $\omega = 1/\sqrt{LC}$ and $Z = \sqrt{L/C}$ respectively.

Losses in this resonant system consist of ohmic (material absorption) loss inside the wire and radiative loss into free space. One can again *define* a total absorption resistance R_{abs} from the amount of power absorbed inside the wire and a total radiation resistance R_{rad} from the amount of power radiated due to electric- and magnetic-dipole radiation:

$$P_{abs} \equiv \frac{1}{2} I_o^2 R_{abs} \Rightarrow R_{abs} \approx \zeta_c \frac{l}{2\pi a}\cdot\frac{I_{rms}^2}{I_o^2} \tag{4}$$

$$P_{rad} \equiv \frac{1}{2} I_o^2 R_{rad} \Rightarrow R_{rad} \approx \frac{\zeta_o}{6\pi}\left[\left(\frac{\omega|\mathbf{p}|}{c}\right)^2 + \left(\frac{\omega\sqrt{|\mathbf{m}|}}{c}\right)^4\right], \tag{5}$$

InductEV, Inc.
Exhibit 1031
Page 036

where $c = 1/\sqrt{\mu_o \varepsilon_o}$ and $\zeta_o = \sqrt{\mu_o / \varepsilon_o}$ are the light velocity and light impedance in free space, the impedance ζ_c is $\zeta_c = 1/\sigma\delta = \sqrt{\mu_o \omega / 2\sigma}$ with σ the conductivity of the conductor and δ the skin depth at the frequency ω, $I_{rms}^2 = \frac{1}{l}\int dx \left|I(x)\right|^2$, $\mathbf{p} = \int dx\, \mathbf{r}\rho_l(x)$ is the electric-dipole moment of the coil and $\mathbf{m} = \frac{1}{2}\int dx\, \mathbf{r} \times \mathbf{j}(x)$ is the magnetic-dipole moment of the coil. For the radiation resistance formula Eq.(5), the assumption of operation in the quasi-static regime ($h, r \ll \lambda = 2\pi c/\omega$) has been used, which is the desired regime of a subwavelength resonance. With these definitions, the absorption and radiation quality factors of the resonance are given by $Q^{abs} = Z/R_{abs}$ and $Q^{rad} = Z/R_{rad}$ respectively.

From Eq.(2)-(5) it follows that to determine the resonance parameters one simply needs to know the current distribution $\mathbf{j}$ in the resonant coil. Solving Maxwell's equations to rigorously find the current distribution of the resonant electromagnetic eigenmode of a conducting-wire coil is more involved than, for example, of a standard LC circuit, and we can find no exact solutions in the literature for coils of finite length, making an exact solution difficult. One could in principle write down an elaborate transmission-line-like model, and solve it by brute force. We instead present a model that is (as described below) in good agreement (~5%) with experiment. Observing that the finite extent of the conductor forming each coil imposes the boundary condition that the current has to be zero at the ends of the coil, since no current can leave the wire, we assume that the resonant mode of each coil is well approximated by a sinusoidal current profile along the length of the conducting wire. We shall be interested in the lowest mode, so if we denote by x the coordinate along the conductor, such that it runs from $-l/2$ to $+l/2$, then the current amplitude profile would have the form $I(x) = I_o \cos(\pi x/l)$, where we have assumed that the current does not vary significantly along the wire circumference for a particular x, a valid assumption provided $a \ll r$. It immediately follows from the continuity equation for charge that the linear charge density profile should be of the form $\rho_l(x) = \rho_o \sin(\pi x/l)$, and thus

InductEV, Inc.
Exhibit 1031
Page 037

$q_o = \int_0^{l/2} dx \rho_o \left|\sin\left(\pi x/l\right)\right| = \rho_o l/\pi$. Using these sinusoidal profiles we find the so-called "self-inductance" L_s and "self-capacitance" C_s of the coil by computing numerically the integrals Eq.(2) and (3); the associated frequency and effective impedance are ω_s and Z_s respectively. The "self-resistances" R_s are given analytically by Eq.(4) and (5) using

$I_{rms}^2 = \frac{1}{l}\int_{-l/2}^{l/2} dx \left|I_o \cos\left(\pi x/l\right)\right|^2 = \frac{1}{2} I_o^2$, $\quad |\mathbf{p}| = q_o \sqrt{\left(\frac{2}{\pi} h\right)^2 + \left(\frac{4N\cos(\pi N)}{(4N^2-1)\pi} r\right)^2}$ and

$|\mathbf{m}| = I_o \sqrt{\left(\frac{2}{\pi} N \pi r^2\right)^2 + \left(\frac{\cos(\pi N)(12N^2-1) - \sin(\pi N)\pi N(4N^2-1)}{(16N^4-8N^2+1)\pi} hr\right)^2}$, and therefore the associated Q_s factors may be calculated.

The results for two particular embodiments of resonant coils with subwavelength modes of $\lambda_s / r \geq 70$ (i.e. those highly suitable for near-field coupling and well within the quasi-static limit) are presented in Table 1. Numerical results are shown for the wavelength and absorption, radiation and total loss rates, for the two different cases of subwavelength-coil resonant modes. Note that, for conducting material, copper (σ=5.998•10^-7 S/m) was used. It can be seen that expected quality factors at microwave frequencies are $Q_s^{abs} \geq 1000$ and $Q_s^{rad} \geq 5000$.

Table 1

single coil	λ_s / r	f (MHz)	Q_s^{rad}	Q_s^{abs}	$Q_s = \omega_s / 2\Gamma_s$
r=30cm, h=20cm, a=1cm, N=4	74.7	13.39	4164	8170	2758
r=10cm, h=3cm, a=2mm, N=6	140	21.38	43919	3968	3639

Referring to Fig. 3, in some embodiments, energy is transferred between two self-resonant conducting-wire coils. The electric and magnetic fields are used to couple the different resonant conducting-wire coils at a distance D between their centers. Usually, the electric coupling highly dominates over the magnetic coupling in the system under

InductEV, Inc.
Exhibit 1031
Page 038

consideration for coils with $h \gg 2r$ and, oppositely, the magnetic coupling highly dominates over the electric coupling for coils with $h \ll 2r$. Defining the charge and current distributions of two coils 1,2 respectively as $\rho_{1,2}(\mathbf{x})$ and $\mathbf{j}_{1,2}(\mathbf{x})$, total charges and peak currents respectively as $q_{1,2}$ and $I_{1,2}$, and capacitances and inductances respectively as $C_{1,2}$ and $L_{1,2}$, which are the analogs of $\rho(\mathbf{x})$, $\mathbf{j}(\mathbf{x})$, q_o, I_o, C and L for the single-coil case and are therefore well defined, we can *define* their mutual capacitance and inductance through the total energy:

$$U \equiv U_1 + U_2 + \frac{1}{2}\left(q_1^* q_2 + q_2^* q_1\right)/M_C + \frac{1}{2}\left(I_1^* I_2 + I_2^* I_1\right)M_L$$

$$\Rightarrow 1/M_C = \frac{1}{4\pi\varepsilon_o q_1 q_2}\iint d\mathbf{x}d\mathbf{x}'\frac{\rho_1(\mathbf{x})\cdot\rho_2(\mathbf{x}')}{|\mathbf{x}-\mathbf{x}'|}u, \quad M_L = \frac{\mu_o}{4\pi I_1 I_2}\iint d\mathbf{x}d\mathbf{x}'\frac{\mathbf{j}_1(\mathbf{x})\cdot\mathbf{j}_2(\mathbf{x}')}{|\mathbf{x}-\mathbf{x}'|}u\,, \tag{6}$$

where $U_1 = \frac{1}{2}q_1^2/C_1 = \frac{1}{2}I_1^2 L_1$, $U_2 = \frac{1}{2}q_2^2/C_2 = \frac{1}{2}I_2^2 L_2$ and the retardation factor of $u = \exp\left(i\omega|\mathbf{x}-\mathbf{x}'|/c\right)$ inside the integral can been ignored in the quasi-static regime $D \ll \lambda$ of interest, where each coil is within the near field of the other. With this definition, the coupling coefficient is given by $\kappa = \omega\sqrt{C_1 C_2}/2M_C + \omega M_L/2\sqrt{L_1 L_2}$ $\Leftrightarrow Q_\kappa^{-1} = \left(M_C/\sqrt{C_1 C_2}\right)^{-1} + \left(\sqrt{L_1 L_2}/M_L\right)^{-1}$.

Therefore, to calculate the coupling rate between two self-resonant coils, again the current profiles are needed and, by using again the assumed sinusoidal current profiles, we compute numerically from Eq.(6) the mutual capacitance $M_{C,s}$ and inductance $M_{L,s}$ between two self-resonant coils at a distance D between their centers, and thus $Q_{\kappa,s}$ is also determined.

Table 2

InductEV, Inc.
Exhibit 1031
Page 039

Referring to Table 2, relevant parameters are shown for exemplary embodiments featuring pairs or identical self resonant coils. Numerical results are presented for the average wavelength and loss rates of the two normal modes (individual values not shown), and also the coupling rate and figure-of-merit as a function of the coupling distance *D*, for the two cases of modes presented in Table1. It can be seen that for medium distances $D/r = 10-3$ the expected coupling-to-loss ratios are in the range $\kappa/\Gamma \sim 2-70$.

Capacitively-loaded conducting loops or coils

In some embodiments, one or more of the resonant objects are capacitively-loaded conducting loops or coils. Referring to Fig. 4 a helical coil with *N* turns of conducting wire, as described above, is connected to a pair of conducting parallel plates of area *A* spaced by distance *d* via a dielectric material of relative permittivity ε, and everything is surrounded by air (as shown, *N=1* and *h=0*). The plates have a capacitance $C_p = \varepsilon_o \varepsilon A/d$, which is added to the distributed capacitance of the coil and thus modifies its resonance. Note however, that the presence of the loading capacitor modifies significantly the current distribution inside the wire and therefore the total effective inductance L and total effective capacitance C of the coil are different respectively from L_s and C_s,

pair of coils	D/r	$Q=\omega/2\Gamma$	$Q_\kappa=\omega/2\kappa$	κ/Γ
r=30cm, h=20cm, a=1cm, N=4 $\lambda/r \approx 75$ $Q_s^{abs} \approx 8170,\ Q_s^{rad} \approx 4164$	3	2758	38.9	70.9
	5	2758	139.4	19.8
	7	2758	333.0	8.3
	10	2758	818.9	3.4
r=10cm, h=3cm, a=2mm, N=6 $\lambda/r \approx 140$ $Q_s^{abs} \approx 3968,\ Q_s^{rad} \approx 43919$	3	3639	61.4	59.3
	5	3639	232.5	15.7
	7	3639	587.5	6.2
	10	3639	1580	2.3

which are calculated for a self-resonant coil of the same geometry using a sinusoidal current profile. Since some charge is accumulated at the plates of the external loading capacitor, the charge distribution ρ inside the wire is reduced, so $C < C_s$, and thus, from the charge conservation equation, the current distribution $\mathbf{j}$ flattens out, so $L > L_s$. The resonant frequency for this system is $\omega = 1/\sqrt{L\left(C + C_p\right)} < \omega_s = 1/\sqrt{L_s C_s}$, and $I(x) \to I_o \cos(\pi x / l) \Rightarrow\ C \to C_s \Rightarrow\ \omega \to \omega_s$, as $C_p \to 0$.

In general, the desired CMT parameters can be found for this system, but again a very complicated solution of Maxwell's Equations is required. Instead, we will analyze only a special case, where a reasonable guess for the current distribution can be made. When $C_p \gg C_s > C$, then $\omega \approx 1/\sqrt{LC_p} \ll \omega_s$ and $Z \approx \sqrt{L/C_p} \ll Z_s$, while all the charge is on the plates of the loading capacitor and thus the current distribution is constant along the wire. This allows us now to compute numerically L from Eq.(2). In the case $h = 0$ and N integer, the integral in Eq.(2) can actually be computed analytically, giving the formula $L = \mu_o r\left[\ln(8r/a) - 2\right]N^2$. Explicit analytical formulas are again available for R from Eq.(4) and (5), since $I_{rms} = I_o$, $|\mathbf{p}| \approx 0$ and $|\mathbf{m}| = I_o N \pi r^2$ (namely only the magnetic-dipole term is contributing to radiation), so we can determine also $Q^{abs} = \omega L / R_{abs}$ and $Q^{rad} = \omega L / R_{rad}$. At the end of the calculations, the validity of the assumption of constant current profile is confirmed by checking that indeed the condition $C_p \gg C_s \Leftrightarrow \omega \ll \omega_s$ is satisfied. To satisfy this condition, one could use a large external capacitance, however, this would usually shift the operational frequency lower than the optimal frequency, which we will determine shortly; instead, in typical embodiments, one often prefers coils with very small self-capacitance C_s to begin with, which usually holds, for the types of coils under consideration, when $N = 1$, so that the self-capacitance comes from the charge distribution across the single turn, which is almost always very small, or when $N > 1$ and $h \gg 2Na$, so that the dominant self-capacitance comes from the charge distribution across adjacent turns, which is small if the separation between adjacent turns is large.

InductEV, Inc.
Exhibit 1031
Page 041

The external loading capacitance C_p provides the freedom to tune the resonant frequency (for example by tuning A or d). Then, for the particular simple case $h = 0$, for which we have analytical formulas, the total $Q = \omega L / \left(R_{abs} + R_{rad} \right)$ becomes highest at the optimal frequency

$$\tilde{\omega} = \left[\frac{c^4}{\pi} \sqrt{\frac{\varepsilon_o}{2\sigma}} \cdot \frac{1}{aNr^3} \right]^{2/7}, \tag{7}$$

reaching the value

$$\tilde{Q} = \frac{6}{7\pi} \left(2\pi^2 \eta_o \frac{\sigma a^2 N^2}{r} \right)^{3/7} \cdot \left[\ln\left(\frac{8r}{a} \right) - 2 \right]. \tag{8}$$

At lower frequencies it is dominated by ohmic loss and at higher frequencies by radiation. Note, however, that the formulas above are accurate as long as $\tilde{\omega} \ll \omega_s$ and, as explained above, this holds almost always when $N = 1$, and is usually less accurate when $N > 1$, since $h = 0$ usually implies a large self-capacitance. A coil with large h can be used, if the self-capacitance needs to be reduced compared to the external capacitance, but then the formulas for L and $\tilde{\omega}$, $\tilde{Q}$ are again less accurate. Similar qualitative behavior is expected, but a more complicated theoretical model is needed for making quantitative predictions in that case.

The results of the above analysis for two embodiments of subwavelength modes of $\lambda / r \geq 70$ (namely highly suitable for near-field coupling and well within the quasi-static limit) of coils with $N = 1$ and $h = 0$ at the optimal frequency Eq.(7) are presented in Table 3. To confirm the validity of constant-current assumption and the resulting analytical formulas, mode-solving calculations were also performed using another completely independent method: computational 3D finite-element frequency-domain (FEFD) simulations (which solve Maxwell's Equations in frequency domain exactly apart for spatial discretization) were conducted, in which the boundaries of the conductor were modeled using a complex impedance $\zeta_c = \sqrt{\mu_o \omega / 2\sigma}$ boundary condition, valid as long as $\zeta_c / \zeta_o \ll 1$ ($<10^{-5}$ for copper in the microwave). Table 3 shows Numerical

FEFD (and in parentheses analytical) results for the wavelength and absorption, radiation and total loss rates, for two different cases of subwavelength-loop resonant modes. Note that for conducting material copper ($\sigma=5.998\cdot10^7 S/m$) was used. (The specific parameters of the plot in Fig. 4 are highlighted with bold in the table.) The two methods (analytical and computational) are in very good agreement and show that, in some embodiments, the optimal frequency is in the low-MHz microwave range and the expected quality factors are $Q^{abs} \geq 1000$ and $Q^{rad} \geq 10000$.

Table 3

single coil	λ / r	f (MHz)	Q^{rad}	Q^{abs}	$Q = \omega/2\Gamma$
r=30cm, a=2cm ε=10, A=138cm^2, d=4mm	**111.4 (112.4)**	**8.976 (8.897)**	**29546 (30512)**	**4886 (5117)**	**4193 (4381)**
r=10cm, a=2mm ε=10, A=3.14cm^2, d=1mm	69.7 (70.4)	43.04 (42.61)	10702 (10727)	1545 (1604)	1350 (1395)

Referring to Fig. 5, in some embodiments, energy is transferred between two capacitively-loaded coils. For the rate of energy transfer between two capacitively-loaded coils 1 and 2 at distance D between their centers, the mutual inductance M_L can be evaluated numerically from Eq.(6) by using constant current distributions in the case $\omega \ll \omega_s$. In the case $h = 0$, the coupling is only magnetic and again we have an analytical formula, which, in the quasi-static limit $r \ll D \ll \lambda$ and for the relative orientation shown in Figure 4, is $M_L \approx \pi\mu_o / 2 \cdot (r_1 r_2)^2 N_1 N_2 / D^3$, which means that $Q_\kappa \propto \left(D/\sqrt{r_1 r_2}\right)^3$ is independent of the frequency ω and the number of turns N_1, N_2. Consequently, the resultant coupling figure-of-merit of interest is

$$\frac{\kappa}{\sqrt{\Gamma_1 \Gamma_2}} = \frac{\sqrt{Q_1 Q_2}}{Q_\kappa} \approx \left(\frac{\sqrt{r_1 r_2}}{D}\right)^3 \cdot \frac{\pi^2 \eta_o \frac{\sqrt{r_1 r_2}}{\lambda} \cdot N_1 N_2}{\prod_{j=1,2}\left(\sqrt{\frac{\pi\eta_o}{\lambda\sigma}} \cdot \frac{r_j}{a_j} N_j + \frac{8}{3}\pi^5 \eta_o \left(\frac{r_j}{\lambda}\right)^4 N_j^2\right)^{1/2}}, \tag{9}$$

which again is more accurate for $N_1 = N_2 = 1$.

From Eq.(9) it can be seen that the optimal frequency $\tilde{\omega}$, where the figure-of-merit is maximized to the value $\left(\sqrt{Q_1 Q_2} / Q_\kappa\right)$, is that where $\sqrt{Q_1 Q_2}$ is maximized, since Q_κ does not depend on frequency (at least for the distances $D \ll \lambda$ of interest for which the quasi-static approximation is still valid). Therefore, the optimal frequency is independent of the distance D between the two coils and lies between the two frequencies where the single-coil Q_1 and Q_2 peak. For same coils, it is given by Eq.(7) and then the figure-of-merit Eq.(9) becomes

$$\widetilde{\left(\frac{\kappa}{\Gamma}\right)} = \frac{\tilde{Q}}{Q_\kappa} \approx \left(\frac{r}{D}\right)^3 \cdot \frac{3}{7}\left(2\pi^2\eta_o \frac{\sigma a^2 N^2}{r}\right)^{3/7}. \qquad (10)$$

Typically, one should tune the capacitively-loaded conducting loops or coils, so that their angular eigenfrequencies are close to $\tilde{\omega}$ within $\tilde{\Gamma}$, which is half the angular frequency width for which $\sqrt{Q_1 Q_2}/Q_\kappa > \widetilde{\left(\sqrt{Q_1 Q_2}/Q_\kappa\right)}/2$.

Referring to Table 4, numerical FEFD and, in parentheses, analytical results based on the above are shown for two systems each composed of a matched pair of the loaded coils described in Table 3. The average wavelength and loss rates are shown along with the coupling rate and coupling to loss ratio figure-of-merit κ/Γ as a function of the coupling distance *D*, for the two cases. Note that the average numerical Γ^{rad} shown are again slightly different from the single-loop value of Figure 3, analytical results for Γ^{rad} are not shown but the single-loop value is used. (The specific parameters corresponding to the plot in Fig. 5 are highlighted with bold in the table.) Again we chose $N = 1$ to make the constant-current assumption a good one and computed M_L numerically from Eq.(6). Indeed the accuracy can be confirmed by their agreement with the computational FEFD mode-solver simulations, which give κ through the frequency splitting ($= 2\kappa$) of the two normal modes of the combined system. The results show that for medium distances $D/r = 10 - 3$ the expected coupling-to-loss ratios are in the range $\kappa/\Gamma \sim 0.5 - 50$.

Table 4

pair of coils	D/r	Q^{rad}	$Q = \omega/2\Gamma$	$Q_\kappa = \omega/2\kappa$	κ/Γ
r=30cm, a=2cm ε=10, A=138cm^2, d=4mm $\lambda/r \approx 112$ $Q^{abs} \approx 4886$	3	30729	4216	62.6 (63.7)	67.4 (68.7)
	5	29577	4194	235 (248)	17.8 (17.6)
	7	**29128**	**4185**	**589 (646)**	**7.1 (6.8)**
	10	28833	4177	1539 (1828)	2.7 (2.4)
r=10cm, a=2mm ε=10, A=3.14cm^2, d=1mm $\lambda/r \approx 70$ $Q^{abs} \approx 1548$	3	10955	1353	85.4 (91.3)	15.9 (15.3)
	5	10740	1351	313 (356)	4.32 (3.92)
	7	10759	1351	754 (925)	1.79 (1.51)
	10	10756	1351	1895 (2617)	0.71 (0.53)

InductEV, Inc.
Exhibit 1031
Page 045

Optimization of $\sqrt{Q_1 Q_2}\,/\,Q_\kappa$

In some embodiments, the results above can be used to increase or optimize the performance of a wireless energy transfer system which employs capacitively-loaded coils. For example, the scaling of Eq.(10) with the different system parameters one sees that to maximize the system figure-of-merit κ/Γ one can, for example:

--Decrease the resistivity of the conducting material. This can be achieved, for example, by using good conductors (such as copper or silver) and/or lowering the temperature. At very low temperatures one could use also superconducting materials to achieve extremely good performance.

--Increase the wire radius *a*. In typical embodiments, this action is limited by physical size considerations. The purpose of this action is mainly to reduce the resistive losses in the wire by increasing the cross-sectional area through which the electric current is flowing, so one could alternatively use also a Litz wire or a ribbon instead of a circular wire.

--For fixed desired distance *D* of energy transfer, increase the radius of the loop *r*. In typical embodiments, this action is limited by physical size considerations.

--For fixed desired distance vs. loop-size ratio *D/r*, decrease the radius of the loop *r*. In typical embodiments, this action is limited by physical size considerations.

--Increase the number of turns *N*. (Even though Eq.(10) is expected to be less accurate for $N > 1$, qualitatively it still provides a good indication that we expect an improvement in the coupling-to-loss ratio with increased *N*.) In typical embodiments, this action is limited by physical size and possible voltage considerations, as will be discussed in following sections.

--Adjust the alignment and orientation between the two coils. The figure-of-merit is optimized when both cylindrical coils have exactly the same axis of cylindrical symmetry (namely they are "facing" each other). In some embodiments, particular mutual coil angles and orientations that lead to zero mutual inductance (such as the orientation where the axes of the two coils are perpendicular) should be avoided.

--Finally, note that the height of the coil h is another available design parameter, which has an impact to the performance similar to that of its radius *r*, and thus the design rules are similar.

InductEV, Inc.
Exhibit 1031
Page 046

The above analysis technique can be used to design systems with desired parameters. For example, as listed below, the above described techniques can be used to determine the cross sectional radius *a* of the wire which one should use when designing as system two same single-turn loops with a given radius in order to achieve a specific performance in terms of κ/Γ at a given D/r between them, when the material is copper ($\sigma=5.998\cdot10^7 S/m$):

$$D/r = 5,\ \kappa/\Gamma \geq 10,\ r = 30cm \Rightarrow a \geq 9mm$$
$$D/r = 5,\ \kappa/\Gamma \geq 10,\ r = 5cm \Rightarrow a \geq 3.7mm$$
$$D/r = 5,\ \kappa/\Gamma \geq 20,\ r = 30cm \Rightarrow a \geq 20mm$$
$$D/r = 5,\ \kappa/\Gamma \geq 20,\ r = 5cm \Rightarrow a \geq 8.3mm$$
$$D/r = 10,\ \kappa/\Gamma \geq 1,\ r = 30cm \Rightarrow a \geq 7mm$$
$$D/r = 10,\ \kappa/\Gamma \geq 1,\ r = 5cm \Rightarrow a \geq 2.8mm$$
$$D/r = 10,\ \kappa/\Gamma \geq 3,\ r = 30cm \Rightarrow a \geq 25mm$$
$$D/r = 10,\ \kappa/\Gamma \geq 3,\ r = 5cm \Rightarrow a \geq 10mm$$

Similar analysis can be done for the case of two dissimilar loops. For example, in some embodiments, the device under consideration is very specific (e.g. a laptop or a cell phone), so the dimensions of the device object (r_d, h_d, a_d, N_d) are very restricted. However, in some such embodiments, the restrictions on the source object (r_s, h_s, a_s, N_s) are much less, since the source can, for example, be placed under the floor or on the ceiling. In such cases, the desired distance is often well defined, based on the application (e.g. $D \sim 1m$ for charging a laptop on a table wirelessly from the floor). Listed below are examples (simplified to the case $N_s = N_d = 1$ and $h_s = h_d = 0$) of how one can vary the dimensions of the source object to achieve the desired system performance in terms of $\kappa/\sqrt{\Gamma_s\Gamma_d}$, when the material is again copper ($\sigma=5.998\cdot10^7 S/m$):

$$D = 1.5m,\ \kappa/\sqrt{\Gamma_s\Gamma_d} \geq 15,\ r_d = 30cm,\ a_d = 6mm \Rightarrow r_s = 1.158m,\ a_s \geq 5mm$$
$$D = 1.5m,\ \kappa/\sqrt{\Gamma_s\Gamma_d} \geq 30,\ r_d = 30cm,\ a_d = 6mm \Rightarrow r_s = 1.15m,\ a_s \geq 33mm$$
$$D = 1.5m,\ \kappa/\sqrt{\Gamma_s\Gamma_d} \geq 1,\ r_d = 5cm,\ a_d = 4mm \Rightarrow r_s = 1.119m,\ a_s \geq 7mm$$
$$D = 1.5m,\ \kappa/\sqrt{\Gamma_s\Gamma_d} \geq 2,\ r_d = 5cm,\ a_d = 4mm \Rightarrow r_s = 1.119m,\ a_s \geq 52mm$$
$$D = 2m,\ \kappa/\sqrt{\Gamma_s\Gamma_d} \geq 10,\ r_d = 30cm,\ a_d = 6mm \Rightarrow r_s = 1.518m,\ a_s \geq 7mm$$
$$D = 2m,\ \kappa/\sqrt{\Gamma_s\Gamma_d} \geq 20,\ r_d = 30cm,\ a_d = 6mm \Rightarrow r_s = 1.514m,\ a_s \geq 50mm$$
$$D = 2m,\ \kappa/\sqrt{\Gamma_s\Gamma_d} \geq 0.5,\ r_d = 5cm,\ a_d = 4mm \Rightarrow r_s = 1.491m,\ a_s \geq 5mm$$
$$D = 2m,\ \kappa/\sqrt{\Gamma_s\Gamma_d} \geq 1,\ r_d = 5cm,\ a_d = 4mm \Rightarrow r_s = 1.491m,\ a_s \geq 36mm$$

Optimization of Q_κ

As will be described below, in some embodiments the quality factor Q of the resonant objects is limited from external perturbations and thus varying the coil parameters cannot lead to improvement in Q. In such cases, one may opt to increase the coupling to loss ratio figure-of-merit by decreasing Q_κ (i.e. increasing the coupling). The coupling does not depend on the frequency and the number of turns. Therefore, the remaining degrees of freedom are:

--Increase the wire radii a_1 and a_2. In typical embodiments, this action is limited by physical size considerations.

--For fixed desired distance D of energy transfer, increase the radii of the coils r_1 and r_2. In typical embodiments, this action is limited by physical size considerations.

-- For fixed desired distance vs. coil-sizes ratio $D/\sqrt{r_1 r_2}$, only the weak (logarithmic) dependence of the inductance remains, which suggests that one should decrease the radii of the coils r_1 and r_2. In typical embodiments, this action is limited by physical size considerations.

--Adjust the alignment and orientation between the two coils. In typical embodiments, the coupling is optimized when both cylindrical coils have exactly the same axis of cylindrical symmetry (namely they are "facing" each other). Particular mutual coil angles and orientations that lead to zero mutual inductance (such as the orientation where the axes of the two coils are perpendicular) should obviously be avoided.

--Finally, note that the heights of the coils h_1 and h_2 are other available design parameters, which have an impact to the coupling similar to that of their radii r_1 and r_2, and thus the design rules are similar.

Further practical considerations apart from efficiency, e.g. physical size limitations, will be discussed in detail below.

It is also important to appreciate the difference between the above described resonant-coupling inductive scheme and the well-known non-resonant inductive scheme for energy transfer. Using CMT it is easy to show that, keeping the geometry and the energy stored at the source fixed, the resonant inductive mechanism allows for $\sim Q^2$ ($\sim 10^6$) times more power delivered for work at the device than the traditional non-resonant mechanism. This is why only close-range contact-less medium-power (~W) transfer is possible with the latter, while with resonance either close-range but large-power (~kW) transfer is allowed or, as currently proposed, if one also ensures operation in the strongly-coupled regime, medium-range and medium-power transfer is possible. Capacitively-loaded conducting loops are currently used as resonant antennas (for example in cell phones), but those operate in the far-field regime with $D/r \gg 1$, $r/\lambda \sim 1$, and the radiation Q's are intentionally designed to be small to make the antenna efficient, so they are not appropriate for energy transfer.

Inductively-loaded conducting rods

A straight conducting rod of length $2h$ and cross-sectional radius a has distributed capacitance and distributed inductance, and therefore it supports a resonant mode of angular frequency ω. Using the same procedure as in the case of self-resonant coils, one can *define* an effective total inductance L and an effective total capacitance C of the rod through formulas (2) and (3). With these definitions, the resonant angular frequency and the effective impedance are given again by the common formulas $\omega = 1/\sqrt{LC}$ and $Z = \sqrt{L/C}$ respectively. To calculate the total inductance and capacitance, one can assume again a sinusoidal current profile along the length of the conducting wire. When interested in the lowest mode, if we denote by x the coordinate along the conductor, such that it runs from $-h$ to $+h$, then the current amplitude profile would have the form

$I(x) = I_o \cos(\pi x / 2h)$, since it has to be zero at the open ends of the rod. This is the well-known half-wavelength electric dipole resonant mode.

In some embodiments, one or more of the resonant objects are inductively-loaded conducting rods. A straight conducting rod of length $2h$ and cross-sectional radius a, as in the previous paragraph, is cut into two equal pieces of length h, which are connected via a coil wrapped around a magnetic material of relative permeability μ, and everything is surrounded by air. The coil has an inductance L_c, which is added to the distributed inductance of the rod and thus modifies its resonance. Note however, that the presence of the center-loading inductor modifies significantly the current distribution inside the wire and therefore the total effective inductance L and total effective capacitance C of the rod are different respectively from L_s and C_s, which are calculated for a self-resonant rod of the same total length using a sinusoidal current profile, as in the previous paragraph. Since some current is running inside the coil of the external loading inductor, the current distribution $\mathbf{j}$ inside the rod is reduced, so $L < L_s$, and thus, from the charge conservation equation, the linear charge distribution ρ_l flattens out towards the center (being positive in one side of the rod and negative in the other side of the rod, changing abruptly through the inductor), so $C > C_s$. The resonant frequency for this system is $\omega = 1/\sqrt{(L + L_c)C} < \omega_s = 1/\sqrt{L_s C_s}$, and $I(x) \to I_o \cos(\pi x / 2h) \Rightarrow L \to L_s \Rightarrow \omega \to \omega_s$, as $L_c \to 0$.

In general, the desired CMT parameters can be found for this system, but again a very complicated solution of Maxwell's Equations is required. Instead, we will analyze only a special case, where a reasonable guess for the current distribution can be made. When $L_c \gg L_s > L$, then $\omega \approx 1/\sqrt{L_c C} \ll \omega_s$ and $Z \approx \sqrt{L_c / C} \gg Z_s$, while the current distribution is triangular along the rod (with maximum at the center-loading inductor and zero at the ends) and thus the charge distribution is positive constant on one half of the rod and equally negative constant on the other side of the rod. This allows us now to compute numerically C from Eq.(3). In this case, the integral in Eq.(3) can actually be computed analytically, giving the formula $1/C = 1/(\pi \varepsilon_o h)\left[\ln(h/a) - 1\right]$. Explicit

InductEV, Inc.
Exhibit 1031
Page 050

analytical formulas are again available for R from Eq.(4) and (5), since $I_{rms} = I_o$, $|\mathbf{p}| = q_o h$ and $|\mathbf{m}| = 0$ (namely only the electric-dipole term is contributing to radiation), so we can determine also $Q^{abs} = 1/\omega C R_{abs}$ and $Q^{rad} = 1/\omega C R_{rad}$. At the end of the calculations, the validity of the assumption of triangular current profile is confirmed by checking that indeed the condition $L_c \gg L_s \Leftrightarrow \omega \ll \omega_s$ is satisfied. This condition is relatively easily satisfied, since typically a conducting rod has very small self-inductance L_s to begin with.

Another important loss factor in this case is the resistive loss inside the coil of the external loading inductor L_c and it depends on the particular design of the inductor. In some embodiments, the inductor is made of a Brooks coil, which is the coil geometry which, for fixed wire length, demonstrates the highest inductance and thus quality factor. The Brooks coil geometry has N_{Bc} turns of conducting wire of cross-sectional radius a_{Bc} wrapped around a cylindrically symmetric coil former, which forms a coil with a square cross-section of side r_{Bc}, where the inner side of the square is also at radius r_{Bc} (and thus the outer side of the square is at radius $2r_{Bc}$), therefore $N_{Bc} \approx \left(r_{Bc}/2a_{Bc}\right)^2$. The inductance of the coil is then $L_c = 2.0285\mu_o r_{Bc} N_{Bc}^2 \approx 2.0285\mu_o r_{Bc}^5 / 8a_{Bc}^4$ and its resistance $R_c \approx \frac{1}{\sigma}\frac{l_{Bc}}{\pi a_{Bc}^2}\sqrt{1+\frac{\mu_o\omega\sigma}{2}\left(\frac{a_{Bc}}{2}\right)^2}$, where the total wire length is $l_{Bc} \approx 2\pi\left(3r_{Bc}/2\right)N_{Bc} \approx 3\pi r_{Bc}^3/4a_{Bc}^2$ and we have used an approximate square-root law for the transition of the resistance from the dc to the ac limit as the skin depth varies with frequency.

The external loading inductance L_c provides the freedom to tune the resonant frequency. (For example, for a Brooks coil with a fixed size r_{Bc}, the resonant frequency can be reduced by increasing the number of turns N_{Bc} by decreasing the wire cross-sectional radius a_{Bc}. Then the desired resonant angular frequency $\omega = 1/\sqrt{L_c C}$ is

InductEV, Inc.
Exhibit 1031
Page 051

achieved for $a_{Bc} \approx \left(2.0285\mu_o r_{Bc}^5 \omega^2 C\right)^{1/4}$ and the resulting coil quality factor is $Q_c \approx 0.169\mu_o \sigma r_{Bc}^2 \omega / \sqrt{1+\omega^2 \mu_o \sigma \sqrt{2.0285\mu_o \left(r_{Bc}/4\right)^5 C}}$). Then, for the particular simple case $L_c \gg L_s$, for which we have analytical formulas, the total $Q = 1/\omega C\left(R_c + R_{abs} + R_{rad}\right)$ becomes highest at some optimal frequency $\tilde{\omega}$, reaching the value $\tilde{Q}$, both determined by the loading-inductor specific design. (For example, for the Brooks-coil procedure described above, at the optimal frequency $\tilde{Q} \approx Q_c \approx 0.8\left(\mu_o \sigma^2 r_{Bc}^3 / C\right)^{1/4}$) At lower frequencies it is dominated by ohmic loss inside the inductor coil and at higher frequencies by radiation. Note, again, that the above formulas are accurate as long as $\tilde{\omega} \ll \omega_s$ and, as explained above, this is easy to design for by using a large inductance.

The results of the above analysis for two embodiments, using Brooks coils, of subwavelength modes of $\lambda / h \geq 200$ (namely highly suitable for near-field coupling and well within the quasi-static limit) at the optimal frequency $\tilde{\omega}$ are presented in Table 5. Table 5 shows in parentheses (for similarity to previous tables) analytical results for the wavelength and absorption, radiation and total loss rates, for two different cases of subwavelength-loop resonant modes. Note that for conducting material copper ($\sigma=5.998\cdot10^7 S/m$) was used. The results show that, in some embodiments, the optimal frequency is in the low-MHz microwave range and the expected quality factors are $Q^{abs} \geq 1000$ and $Q^{rad} \geq 100000$.

Table 5

single rod	λ / h	f (MHz)	Q^{rad}	Q^{abs}	$Q = \omega/2\Gamma$
h=30cm, a=2cm μ=1, r_{Bc}=2cm, a_{Bc}=0.88mm, N_{Bc}=129	(403.8)	(2.477)	($2.72*10^6$)	(7400)	(7380)
h=10cm, a=2mm μ=1, r_{Bc}=5mm, a_{Bc}=0.25mm,	(214.2)	(14.010)	($6.92*10^5$)	(3908)	(3886)

In some embodiments, energy is transferred between two inductively-loaded rods. For the rate of energy transfer between two inductively-loaded rods 1 and 2 at distance D between their centers, the mutual capacitance M_C can be evaluated numerically from Eq.(6) by using triangular current distributions in the case $\omega \ll \omega_s$. In this case, the coupling is only electric and again we have an analytical formula, which, in the quasi-static limit $h \ll D \ll \lambda$ and for the relative orientation such that the two rods are aligned on the same axis, is $1/M_C \approx 1/2\pi\varepsilon_o \cdot (h_1 h_2)^2 / D^3$, which means that $Q_\kappa \propto \left(D/\sqrt{h_1 h_2}\right)^3$ is independent of the frequency ω. Consequently, one can get the resultant coupling figure-of-merit of interest $\frac{\kappa}{\sqrt{\Gamma_1 \Gamma_2}} = \frac{\sqrt{Q_1 Q_2}}{Q_\kappa}$. It can be seen that the optimal frequency $\tilde{\omega}$, where the figure-of-merit is maximized to the value $\left(\widetilde{\sqrt{Q_1 Q_2}/Q_\kappa}\right)$, is that where $\sqrt{Q_1 Q_2}$ is maximized, since Q_κ does not depend on frequency (at least for the distances $D \ll \lambda$ of interest for which the quasi-static approximation is still valid). Therefore, the optimal frequency is independent of the distance D between the two rods and lies between the two frequencies where the single-rod Q_1 and Q_2 peak. Typically, one should tune the inductively-loaded conducting rods, so that their angular eigenfrequencies are close to $\tilde{\omega}$ within $\tilde{\Gamma}$, which is half the angular frequency width for which $\sqrt{Q_1 Q_2}/Q_\kappa > \left(\widetilde{\sqrt{Q_1 Q_2}/Q_\kappa}\right)/2$.

Referring to Table 6, in parentheses (for similarity to previous tables) analytical results based on the above are shown for two systems each composed of a matched pair of the loaded rods described in Table 5. The average wavelength and loss rates are shown along with the coupling rate and coupling to loss ratio figure-of-merit κ/Γ as a function of the coupling distance D, for the two cases. Note that for Γ^{rad} the single-rod value is used. Again we chose $L_c \gg L_s$ to make the triangular-current assumption a good one and computed M_C numerically from Eq.(6). The results show that for medium distances $D/h = 10 - 3$ the expected coupling-to-loss ratios are in the range $\kappa/\Gamma \sim 0.5 - 100$.

Table 6

pair of rods	D/h	$Q_\kappa = \omega/2\kappa$	κ/Γ
h=30cm, a=2cm μ=1, r_{Bc}=2cm, a_{Bc}=0.88mm, N_{Bc}=129 $\lambda/h \approx 404$ $Q \approx 7380$	3	(70.3)	(105.0)
	5	(389)	(19.0)
	7	(1115)	(6.62)
	10	(3321)	(2.22)
h=10cm, a=2mm μ=1, r_{Bc}=5mm, a_{Bc}=0.25mm, N_{Bc}=103 $\lambda/h \approx 214$ $Q \approx 3886$	3	(120)	(32.4)
	5	(664)	(5.85)
	7	(1900)	(2.05)
	10	(5656)	(0.69)

Dielectric disks

In some embodiments, one or more of the resonant objects are dielectric objects, such as disks. Consider a two dimensional dielectric disk object, as shown in Fig. 6, of radius r and relative permittivity ε surrounded by air that supports high-Q "whispering-gallery" resonant modes. The loss mechanisms for the energy stored inside such a resonant system are radiation into free space and absorption inside the disk material. High-Q_{rad} and long-tailed subwavelength resonances can be achieved when the dielectric permittivity ε is large and the azimuthal field variations are slow (namely of small principal number m). Material absorption is related to the material loss tangent: $Q_{abs} \sim \mathrm{Re}\{\varepsilon\}/\mathrm{Im}\{\varepsilon\}$. Mode-solving calculations for this type of disk resonances were performed using two independent methods: numerically, 2D finite-difference frequency-domain (FDFD) simulations (which solve Maxwell's Equations in frequency domain exactly apart for spatial discretization) were conducted with a resolution of *30pts/r*; analytically, standard separation of variables (SV) in polar coordinates was used.

Table 7

single disk	λ/r	Q^{abs}	Q^{rad}	Q
Re{ε}=147.7, m=2	**20.01 (20.00)**	**10103 (10075)**	**1988 (1992)**	**1661 (1663)**
Re{ε}=63.6, m=3	9.952 (9.950)	10098 (10087)	9078 (9168)	4780 (4802)

The results for two TE-polarized dielectric-disk subwavelength modes of $\lambda/r \geq 10$ are presented in Table 7. Table 7 shows numerical FDFD (and in parentheses analytical SV) results for the wavelength and absorption, radiation and total loss rates, for two different cases of subwavelength-disk resonant modes. Note that disk-material loss-tangent $\mathrm{Im}\{\varepsilon\}/\mathrm{Re}\{\varepsilon\}=10^{-4}$ was used. (The specific parameters corresponding to the plot in Fig 6. are highlighted with bold in the table.) The two methods have excellent agreement and imply that for a properly designed resonant low-loss-dielectric object values of $Q_{rad} \geq 2000$ and $Q_{abs} \sim 10000$ are achievable. Note that for the 3D case the computational complexity would be immensely increased, while the physics would not be significantly different. For example, a spherical object of $\varepsilon=147.7$ has a whispering gallery mode with $m=2$, $Qrad=13962$, and $\lambda/r=17$.

The required values of ε, shown in Table 7, might at first seem unrealistically large. However, not only are there in the microwave regime (appropriate for approximately meter-range coupling applications) many materials that have both reasonably high enough dielectric constants and low losses (e.g. Titania, Barium tetratitanate, Lithium tantalite etc.), but also ε could signify instead the effective index of other known subwavelength surface-wave systems, such as surface modes on surfaces of metallic materials or plasmonic (metal-like, negative-ε) materials or metallo-dielectric photonic crystals or plasmono-dielectric photonic crystals.

To calculate now the achievable rate of energy transfer between two disks 1 and 2, as shown in Fig. 7 we place them at distance D between their centers. Numerically, the FDFD mode-solver simulations give κ through the frequency splitting ($=2\kappa$) of the normal modes of the combined system, which are even and odd superpositions of the initial single-disk modes; analytically, using the expressions for the separation-of-variables eigenfields $\mathbf{E}_{1,2}(\mathbf{r})$ CMT gives κ through $\kappa = \omega_1/2 \cdot \int d^3\mathrm{r}\varepsilon_2(\mathrm{r})\mathrm{E}_2^*(\mathrm{r})\mathrm{E}_1(\mathrm{r}) / \int d^3\mathrm{r}\varepsilon(\mathrm{r})\left|\mathrm{E}_1(\mathrm{r})\right|^2$ where $\varepsilon_j(\mathbf{r})$ and $\varepsilon(\mathbf{r})$ are the dielectric functions that describe only the disk j (minus the constant ε_o background) and the whole space respectively. Then, for medium distances D/r =10−3 and for non-radiative coupling such that $D< 2\boldsymbol{r}_C$, where $\boldsymbol{r}_C = m\lambda/2\pi$ is the radius of the radiation caustic, the

two methods agree very well, and we finally find , as shown in Table 8, coupling-to-loss ratios in the range κ/Γ ~1−50. Thus, for the analyzed embodiments, the achieved figure-of-merit values are large enough to be useful for typical applications, as discussed below.

Table 8

two disks	D/r	Q^{rad}	$Q=\omega/2\Gamma$	$\omega/2\kappa$	κ/Γ
Re{ε}=147.7, m=2	3	2478	1989	46.9 (47.5)	42.4 (35.0)
$\lambda/r \approx 20$	5	2411	1946	298.0 (298.0)	6.5 (5.6)
$Q^{abs} \approx 10003$	7	2196	1804	769.7 (770.2)	2.3 (2.2)
	10	**2017**	**1681**	**1714 (1601)**	**0.98 (1.04)**
Re{ε}=65.6, m=3	3	7972	4455	144 (140)	30.9 (34.3)
$\lambda/r \approx 10$	5	9240	4824	2242 (2083)	2.2 (2.3)
$Q^{abs} \approx 10096$	7	9187	4810	7485 (7417)	0.64 (0.65)

Note that even though particular embodiments are presented and analyzed above as examples of systems that use resonant electromagnetic coupling for wireless energy transfer, those of self-resonant conducting coils, capacitively-loaded resonant conducting coils and resonant dielectric disks, any system that supports an electromagnetic mode with its electromagnetic energy extending much further than its size can be used for transferring energy. For example, there can be many abstract geometries with distributed capacitances and inductances that support the desired kind of resonances. In any one of these geometries, one can choose certain parameters to increase and/or optimize $\sqrt{Q_1 Q_2}/Q_\kappa$ or, if the Q's are limited by external factors, to increase and/or optimize for Q_κ.

System Sensitivity to Extraneous Objects

In general, the overall performance of particular embodiment of the resonance-based wireless energy-transfer scheme depends strongly on the robustness of the resonant objects' resonances. Therefore, it is desirable to analyze the resonant objects' sensitivity to the near presence of random non-resonant extraneous objects. One appropriate analytical model is that of "perturbation theory" (PT), which suggests that in the presence

of an extraneous object e the field amplitude $a_1(t)$ inside the resonant object 1 satisfies, to first order:

$$\frac{da_1}{dt} = -i\left(\omega_1 - i\Gamma_1\right)a_1 + i\left(\kappa_{11-e} + i\Gamma_{1-e}\right)a_1 \qquad (11)$$

where again ω_1 is the frequency and Γ_1 the intrinsic (absorption, radiation etc.) loss rate, while κ_{1-e} is the frequency shift induced onto 1 due to the presence of e and Γ_{1-e} is the extrinsic due to e (absorption inside e, scattering from e etc.) loss rate. The first-order PT model is valid only for small perturbations. Nevertheless, the parameters κ_{11-e}, Γ_{1-e} are well defined, even outside that regime, if a_1 is taken to be the amplitude of the exact perturbed mode. Note also that interference effects between the radiation field of the initial resonant-object mode and the field scattered off the extraneous object can for strong scattering (e.g. off metallic objects) result in total radiation- Γ_{1-e}'s that are smaller than the initial radiation- Γ_1 (namely Γ_{1-e} is negative).

The frequency shift is a problem that can be "fixed" by applying to one or more resonant objects a feedback mechanism that corrects its frequency. For example, referring to Fig. 8a, in some embodiments each resonant object is provided with an oscillator at fixed frequency and a monitor which determines the frequency of the object. Both the oscillator and the monitor are coupled to a frequency adjuster which can adjust the frequency of the resonant object by, for example, adjusting the geometric properties of the object (e.g. the height of a self-resonant coil, the capacitor plate spacing of a capacitively-loaded loop or coil, the dimensions of the inductor of an inductively-loaded rod, the shape of a dielectric disc, etc.) or changing the position of a non-resonant object in the vicinity of the resonant object. The frequency adjuster determines the difference between the fixed frequency and the object frequency and acts to bring the object frequency into alignment with the fixed frequency. This technique assures that all resonant objects operate at the same fixed frequency, even in the presence of extraneous objects.

As another example, referring to Fig. 8b, in some embodiments, during energy transfer from a source object to a device object, the device object provides energy to a

InductEV, Inc.
Exhibit 1031
Page 057

load, and an efficiency monitor measures the efficiency of the transfer. A frequency adjuster coupled to the load and the efficiency monitor acts to adjust the frequency of the object to maximize the transfer efficiency.

In various embodiments, other frequency adjusting schemes may be used which rely on information exchange between the resonant objects. For example, the frequency of a source object can be monitored and transmitted to a device object, which is in turn synched to this frequency using frequency adjusters as described above. In other embodiments the frequency of a single clock may be transmitted to multiple devices, and each device then synched to that frequency.

Unlike the frequency shift, the extrinsic loss can be detrimental to the functionality of the energy-transfer scheme, because it is difficult to remedy, so the total loss rate $\Gamma_{1[e]}=\Gamma_1+\Gamma_{1-e}$ (and the corresponding figure-of-merit $\kappa_{[e]}/\sqrt{\Gamma_{1[e]}\Gamma_{2[e]}}$, where $\kappa_{[e]}$ the perturbed coupling rate) should be quantified. In embodiments using primarily magnetic resonances, the influence of extraneous objects on the resonances is nearly absent. The reason is that, in the quasi-static regime of operation ($r\ll\lambda$) that we are considering, the near field in the air region surrounding the resonator is predominantly magnetic (e.g. for coils with $h \ll 2r$ most of the electric field is localized within the self-capacitance of the coil or the externally loading capacitor), therefore extraneous non-conducting objects e that could interact with this field and act as a perturbation to the resonance are those having significant magnetic properties (magnetic permeability $Re\{\mu\}>1$ or magnetic loss $Im\{\mu\}>0$). Since almost all every-day non-conducting materials are non-magnetic but just dielectric, they respond to magnetic fields in the same way as free space, and thus will not disturb the resonance of the resonator. Extraneous conducting materials can however lead to some extrinsic losses due to the eddy currents induced on their surface.

As noted above, an extremely important implication of this fact relates to safety considerations for human beings. Humans are also non-magnetic and can sustain strong magnetic fields without undergoing any risk. A typical example, where magnetic fields $B\sim 1T$ are safely used on humans, is the Magnetic Resonance Imaging (MRI) technique for medical testing. In contrast, the magnetic near-field required in typical embodiments in order to provide a few Watts of power to devices is only $B\sim 10^{-4}T$, which is actually

comparable to the magnitude of the Earth's magnetic field. Since, as explained above, a strong electric near-field is also not present and the radiation produced from this non-radiative scheme is minimal, it is reasonable to expect that our proposed energy-transfer method should be safe for living organisms.

One can, for example, estimate the degree to which the resonant system of a capacitively-loaded conducting-wire coil has mostly magnetic energy stored in the space surrounding it. If one ignores the fringing electric field from the capacitor, the electric and magnetic energy densities in the space surrounding the coil come just from the electric and magnetic field produced by the current in the wire; note that in the far field, these two energy densities must be equal, as is always the case for radiative fields. By using the results for the fields produced by a subwavelength ($r \ll \lambda$) current loop (magnetic dipole) with $h = 0$, we can calculate the ratio of electric to magnetic energy densities, as a function of distance D_p from the center of the loop (in the limit $r \ll D_p$) and the angle θ with respect to the loop axis:

$$\frac{u_e(x)}{u_m(x)} = \frac{\varepsilon_o |E(x)|^2}{\mu_o |H(x)|^2} = \frac{\left(1+\frac{1}{x^2}\right)\sin^2\theta}{\left(\frac{1}{x^2}+\frac{1}{x^4}\right)4\cos^2\theta + \left(1-\frac{1}{x^2}+\frac{1}{x^4}\right)\sin^2\theta};\ x = 2\pi\frac{D_p}{\lambda}$$
$$\Rightarrow \frac{\oiint_{S_p} u_e(x)\,dS}{\oiint_{S_p} u_m(x)\,dS} = \frac{1+\frac{1}{x^2}}{1+\frac{1}{x^2}+\frac{3}{x^4}};\ x = 2\pi\frac{D_p}{\lambda} \qquad (12)$$

where the second line is the ratio of averages over all angles by integrating the electric and magnetic energy densities over the surface of a sphere of radius D_p. From Eq.(12) it is obvious that indeed for all angles in the near field ($x \ll 1$) the magnetic energy density is dominant, while in the far field ($x \gg 1$) they are equal as they should be. Also, the preferred positioning of the loop is such that objects which may interfere with its resonance lie close to its axis ($\theta = 0$), where there is no electric field. For example, using the systems described in Table 4, we can estimate from Eq.(12) that for the loop of $r = 30cm$ at a distance $D_p = 10r = 3m$ the ratio of average electric to average magnetic

energy density would be $\sim 12\%$ and at $D_p = 3r = 90cm$ it would be $\sim 1\%$, and for the loop of $r = 10cm$ at a distance $D_p = 10r = 1m$ the ratio would be $\sim 33\%$ and at $D_p = 3r = 30cm$ it would be $\sim 2.5\%$. At closer distances this ratio is even smaller and thus the energy is predominantly magnetic in the near field, while in the radiative far field, where they are necessarily of the same order (ratio $\to 1$), both are very small, because the fields have significantly decayed, as capacitively-loaded coil systems are designed to radiate very little. Therefore, this is the criterion that qualifies this class of resonant system as a magnetic resonant system.

To provide an estimate of the effect of extraneous objects on the resonance of a capacitively-loaded loop including the capacitor fringing electric field, we use the perturbation theory formula, stated earlier, $\Gamma_{1-e}^{abs} = \omega_1 / 4 \cdot \int d^3\mathbf{r}\, \mathrm{Im}\{\varepsilon_e(\mathbf{r})\} |\mathbf{E}_1(\mathbf{r})|^2 / U$ with the computational FEFD results for the field of an example like the one shown in the plot of Fig. 5 and with a rectangular object of dimensions *30cm x 30cm x 1.5m* and permittivity ε*=49+16i* (consistent with human muscles) residing between the loops and almost standing on top of one capacitor (~*3cm* away from it) and find $Q_{e-h}^{abs} \sim 10^5$ and for ~*10cm* away $Q_{e-h}^{abs} \sim 5 \cdot 10^5$. Thus, for ordinary distances (~*1m*) and placements (not immediately on top of the capacitor) or for most ordinary extraneous objects *e* of much smaller loss-tangent, we conclude that it is indeed fair to say that $Q_{e-e}^{abs} \to \infty$. The only perturbation that is expected to affect these resonances is a close proximity of large metallic structures.

Self-resonant coils are more sensitive than capacitively-loaded coils, since for the former the electric field extends over a much larger region in space (the entire coil) rather than for the latter (just inside the capacitor). On the other hand, self-resonant coils are simple to make and can withstand much larger voltages than most lumped capacitors.

In general, different embodiments of resonant systems have different degree of sensitivity to external perturbations, and the resonant system of choice depends on the particular application at hand, and how important matters of sensitivity or safety are for that application. For example, for a medical implantable device (such as a wirelessly powered artificial heart) the electric field extent must be minimized to the highest degree

InductEV, Inc.
Exhibit 1031
Page 060

possible to protect the tissue surrounding the device. In such cases where sensitivity to external objects or safety is important, one should design the resonant systems so that the ratio of electric to magnetic energy density u_e / u_m is reduced or minimized at most of the desired (according to the application) points in the surrounding space.

In embodiments using resonances that are not primarily magnetic, the influence of extraneous objects may be of concern. For example, for dielectric disks, small, low-index, low-material-loss or far-away stray objects will induce small scattering and absorption. In such cases of small perturbations these extrinsic loss mechanisms can be quantified using respectively the analytical first-order perturbation theory formulas

$$\Gamma_{1-e}^{rad} = \omega_1 \int d^3\mathbf{r}\, \mathrm{Re}\{\varepsilon_e(\mathbf{r})\} |\mathbf{E}_1(\mathbf{r})|^2 / U$$

and

$$\Gamma_{1-e}^{abs} = \omega_1 / 4 \cdot \int d^3\mathbf{r}\, \mathrm{Im}\{\varepsilon_e(\mathbf{r})\} |\mathbf{E}_1(\mathbf{r})|^2 / U$$

where $U = 1/2 \int d^3\mathbf{r}\varepsilon(\mathbf{r}) |\mathbf{E}_1(\mathbf{r})|^2$ is the total resonant electromagnetic energy of the unperturbed mode. As one can see, both of these losses depend on the square of the resonant electric field tails $\mathbf{E}_1$ at the site of the extraneous object. In contrast, the coupling rate from object 1 to another resonant object 2 is, as stated earlier,

$$\kappa = \omega_1 / 2 \cdot \int d^3\mathrm{r}\varepsilon_2(\mathrm{r})\mathrm{E}_2^*(\mathrm{r})\mathrm{E}_1(\mathrm{r}) / \int d^3\mathrm{r}\varepsilon(\mathrm{r}) |\mathrm{E}_1(\mathrm{r})|^2$$

and depends *linearly* on the field tails $\mathbf{E}_1$ of 1 inside 2. This difference in scaling gives us confidence that, for, for example, exponentially small field tails, coupling to other resonant objects should be much faster than all extrinsic loss rates ($\kappa \gg \Gamma_{1-e}$), at least for small perturbations, and thus the energy-transfer scheme is expected to be sturdy for this class of resonant dielectric disks. However, we also want to examine certain possible situations where extraneous objects cause perturbations too strong to analyze using the above first-order perturbation theory approach. For example, we place a dielectric disk c close to another off-resonance object of large $\mathrm{Re}\{\varepsilon\}$, $\mathrm{Im}\{\varepsilon\}$ and of same size but different

shape (such as a human being h), as shown in Fig. 9a, and a roughened surface of large extent but of small $\mathrm{Re}\{\varepsilon\}$, $\mathrm{Im}\{\varepsilon\}$ (such as a wall w), as shown in Fig. 9b. For distances $D_{h/w}/r=10^{-3}$ between the disk-center and the "human"-center or "wall", the numerical FDFD simulation results presented in Figs. 9a and 9b suggest that, the disk resonance seems to be fairly robust, since it is not detrimentally disturbed by the presence of extraneous objects, with the exception of the *very* close proximity of high-loss objects. To examine the influence of large perturbations on an entire energy-transfer system we consider two resonant disks in the close presence of both a "human" and a "wall". Comparing Table 8 to the table in Figure 9c, the numerical FDFD simulations show that the system performance deteriorates from $\kappa/\Gamma_{c}\sim 1-50$ to $\kappa[hw]/\Gamma_{c[hw]}\sim 0.5-10$ i.e. only by acceptably small amounts.

Inductively-loaded conducting rods may also be more sensitive than capacitively-loaded coils, since they rely on the electric field to achieve the coupling.

System efficiency

In general, another important factor for any energy transfer scheme is the transfer efficiency. Consider again the combined system of a resonant source s and device d in the presence of a set of extraneous objects e . The efficiency of this resonance-based energy-transfer scheme may be determined, when energy is being drained from the device at rate Γ_{work} for use into operational work. The coupled-mode-theory equation for the device field-amplitude is

$$\frac{da_d}{dt} = -i\left(\omega - i\Gamma_{d[e]}\right)a_d + i\kappa_{[e]}a_s - \Gamma_{work}a_d\,, \tag{13}$$

where $\Gamma_{d[e]} = \Gamma_{d[e]}^{rad} + \Gamma_{d[e]}^{abs} = \Gamma_{d[e]}^{rad} + \left(\Gamma_{d}^{abs} + \Gamma_{d-e}^{abs}\right)$ is the net perturbed-device loss rate, and similarly we define $\Gamma_{s[e]}$ for the perturbed-source. Different temporal schemes can be used to extract power from the device (e.g. steady-state continuous-wave drainage, instantaneous drainage at periodic times and so on) and their efficiencies exhibit different

InductEV, Inc.
Exhibit 1031
Page 062

dependence on the combined system parameters. For simplicity, we assume steady state, such that the field amplitude inside the source is maintained constant, namely $a_s(t) = A_s e^{-i\omega t}$, so then the field amplitude inside the device is $a_d(t) = A_d e^{-i\omega t}$ with $A_d / A_s = i\kappa_{[e]} / (\Gamma_{d[e]} + \Gamma_{work})$. The various time-averaged powers of interest are then: the useful extracted power is $P_{work} = 2\Gamma_{work} |A_d|^2$, the radiated (including scattered) power is $P_{rad} = 2\Gamma^{rad}_{s[e]} |A_s|^2 + 2\Gamma^{rad}_{d[e]} |A_d|^2$, the power absorbed at the source/device is $P_{s/d} = 2\Gamma^{abs}_{s/d} |A_{s/d}|^2$, and at the extraneous objects $P_e = 2\Gamma^{abs}_{s-e} |A_s|^2 + 2\Gamma^{abs}_{d-e} |A_d|^2$. From energy conservation, the total time-averaged power entering the system is $P_{total} = P_{work} + P_{rad} + P_s + P_d + P_e$. Note that the reactive powers, which are usually present in a system and circulate stored energy around it, cancel at resonance (which can be proven for example in electromagnetism from Poynting's Theorem) and do not influence the power-balance calculations. The working efficiency is then:

$$\eta_{work} \equiv \frac{P_{work}}{P_{total}} = \frac{1}{1 + \frac{\Gamma_{d[e]}}{\Gamma_{work}} \cdot \left[1 + \frac{1}{fom^2_{[e]}} \left(1 + \frac{\Gamma_{work}}{\Gamma_{d[e]}}\right)^2\right]}, \tag{14}$$

where $fom_{[e]} = \kappa_{[e]} / \sqrt{\Gamma_{s[e]} \Gamma_{d[e]}}$ is the distance-dependent figure-of-merit of the perturbed resonant energy-exchange system. To derive Eq.(14), we have assumed that the rate Γ_{supply}, at which the power supply is feeding energy to the resonant source, is $\Gamma_{\text{supply}} = \Gamma_{s[e]} + \kappa^2 / \left(\Gamma_{d[e]} + \Gamma_{work}\right)$, such that there are zero reflections of the fed power P_{total} back into the power supply.

[*Example: Capacitively-loaded conducting loops*]

Referring to Fig. 10, to rederive and express this formula (14) in terms of the parameters which are more directly accessible from particular resonant objects, e.g. the capacitively-loaded conducting loops, one can consider the following circuit-model of the system, where the inductances L_s, L_d represent the source and device loops respectively,

InductEV, Inc.
Exhibit 1031
Page 063

R_s, R_d their respective losses, and C_s, C_d are the required corresponding capacitances to achieve for both resonance at frequency ω. A voltage generator V_g is considered to be connected to the source and a work (load) resistance R_w to the device. The mutual inductance is denoted by *M*.

Then from the source circuit at resonance ($\omega L_s = 1/\omega C_s$):

$$V_g = I_s R_s - j\omega M I_d \Rightarrow \frac{1}{2} V_g^* I_s = \frac{1}{2}\left|I_s\right|^2 R_s + \frac{1}{2} j\omega M I_d^* I_s ,$$

and from the device circuit at resonance ($\omega L_d = 1/\omega C_d$):

$$0 = I_d \left(R_d + R_w\right) - j\omega M I_s \Rightarrow j\omega M I_s = I_d \left(R_d + R_w\right)$$

So by substituting the second to the first:

$$\frac{1}{2} V_g^* I_s = \frac{1}{2}\left|I_s\right|^2 R_s + \frac{1}{2}\left|I_d\right|^2 \left(R_d + R_w\right).$$

Now we take the real part (time-averaged powers) to find the efficiency:

$$P_g \equiv \mathrm{Re}\left\{\frac{1}{2} V_g^* I_s\right\} = P_s + P_d + P_w \Rightarrow \eta_{work} \equiv \frac{P_w}{P_{tot}} = \frac{R_w}{\left|\frac{I_s}{I_d}\right|^2 \cdot R_s + R_d + R_w} .$$

Namely,

$$\eta_{work} = \frac{R_w}{\frac{\left(R_d + R_w\right)^2}{\left(\omega M\right)^2} \cdot R_s + R_d + R_w} ,$$

which with $\Gamma_{work} = R_w / 2L_d$, $\Gamma_d = R_d / 2L_d$, $\Gamma_s = R_s / 2L_s$, and $\kappa = \omega M / 2\sqrt{L_s L_d}$, becomes the general Eq.(14). [*End of Example*]

InductEV, Inc.
Exhibit 1031
Page 064

From Eq.(14) one can find that the efficiency is optimized in terms of the chosen work-drainage rate, when this is chosen to be $\Gamma_{work}/\Gamma_{d[e]} = \Gamma_{\text{supply}}/\Gamma_{s[e]} = \sqrt{1+fom_{[e]}^2} > 1$. Then, η_{work} is a function of the $fom_{[e]}$ parameter only as shown in Fig.11 with a solid black line. One can see that the efficiency of the system is $\eta > 17\%$ for $fom_{[e]} > 1$, large enough for practical applications. Thus, the efficiency can be further increased towards 100% by optimizing $fom_{[e]}$ as described above. The ratio of conversion into radiation loss depends also on the other system parameters, and is plotted in Fig. 11 for the conducting loops with values for their parameters within the ranges determined earlier.

For example, consider the capacitively-loaded coil embodiments described in Table 4, with coupling distance $D/r = 7$, a "human" extraneous object at distance D_h from the source, and that $P_{work} = 10W$ must be delivered to the load. Then, we have (based on Fig. 11) $Q_{s[h]}^{rad} = Q_{d[h]}^{rad} \sim 10^4$, $Q_s^{abs} = Q_d^{abs} \sim 10^3$, $Q_\kappa \sim 500$, and $Q_{d-h}^{abs} \to \infty$, $Q_{s-h}^{abs} \sim 10^5$ at $D_h \sim 3cm$ and $Q_{s-h}^{abs} \sim 5 \cdot 10^5$ at $D_h \sim 10cm$. Therefore $fom_{[h]} \sim 2$, so we find $\eta \approx 38\%$, $P_{rad} \approx 1.5W$, $P_s \approx 11W$, $P_d \approx 4W$, and most importantly $\eta_h \approx 0.4\%$, $P_h = 0.1W$ at $D_h \sim 3cm$ and $\eta_h \approx 0.1\%$, $P_h = 0.02W$ at $D_h \sim 10cm$.

Overall system performance

In many cases, the dimensions of the resonant objects will be set by the particular application at hand. For example, when this application is powering a laptop or a cell-phone, the device resonant object cannot have dimensions larger that those of the laptop or cell-phone respectively. In particular, for a system of two loops of specified dimensions, in terms of loop radii $r_{s,d}$ and wire radii $a_{s,d}$, the independent parameters left to adjust for the system optimization are: the number of turns $N_{s,d}$, the frequency f, the work-extraction rate (load resistance) Γ_{work} and the power-supply feeding rate Γ_{supply}.

In general, in various embodiments, the primary dependent variable that one wants to increase or optimize is the overall efficiency η. However, other important variables need to be taken into consideration upon system design. For example, in

InductEV, Inc.
Exhibit 1031
Page 065

embodiments featuring capacitively-loaded coils, the design may be constrained by, for example, the currents flowing inside the wires $I_{s,d}$ and the voltages across the capacitors $V_{s,d}$. These limitations can be important because for ~*Watt* power applications the values for these parameters can be too large for the wires or the capacitors respectively to handle. Furthermore, the total loaded $Q_{tot} = \omega L_d / \left(R_d + R_w\right)$ of the device is a quantity that should be preferably small, because to match the source and device resonant frequencies to within their *Q*'s, when those are very large, can be challenging experimentally and more sensitive to slight variations. Lastly, the radiated powers $P_{rad,s,d}$ should be minimized for safety concerns, even though, in general, for a magnetic, non-radiative scheme they are already typically small.

In the following, we examine then the effects of each one of the independent variables on the dependent ones. We define a new variable wp to express the work-drainage rate for some particular value of $fom_{[e]}$ through $\Gamma_{work} / \Gamma_{d[e]} = \sqrt{1 + wp \cdot fom_{[e]}^2}$. Then, in some embodiments, values which impact the choice of this rate are: $\Gamma_{work} / \Gamma_{d[e]} = 1 \Leftrightarrow wp = 0$ to minimize the required energy stored in the source (and therefore I_s and V_s), $\Gamma_{work} / \Gamma_{d[e]} = \sqrt{1 + fom_{[e]}^2} > 1 \Leftrightarrow wp = 1$ to increase the efficiency, as seen earlier, or $\Gamma_{work} / \Gamma_{d[e]} \gg 1 \Leftrightarrow wp \gg 1$ to decrease the required energy stored in the device (and therefore I_d and V_d) and to decrease or minimize $Q_{tot} = \omega L_d / \left(R_d + R_w\right) = \omega / \left[2\left(\Gamma_d + \Gamma_{work}\right)\right]$. Similar is the impact of the choice of the power supply feeding rate Γ_{supply}, with the roles of the source and the device reversed.

Increasing N_s and N_d increases $\kappa / \sqrt{\Gamma_s \Gamma_d}$ and thus efficiency significantly, as seen before, and also decreases the currents I_s and I_d, because the inductance of the loops increases, and thus the energy $U_{s,d} = \frac{1}{2} L_{s,d} \left|I_{s,d}\right|^2$ required for given output power P_{work} can be achieved with smaller currents. However, increasing N_d increases Q_{tot}, $P_{rad,d}$ and the voltage across the device capacitance V_d, which unfortunately ends up being, in typical embodiments one of the greatest limiting factors of the system. To explain this, note that it is the electric field that really induces breakdown of the capacitor

InductEV, Inc.
Exhibit 1031
Page 066

material (e.g. 3kV/mm for air) and not the voltage, and that for the desired (close to the optimal) operational frequency, the increased inductance L_d implies reduced required capacitance C_d, which could be achieved in principle, for a capacitively-loaded device coil by increasing the spacing of the device capacitor plates d_d and for a self-resonant coil by increasing through h_d the spacing of adjacent turns, resulting in an electric field ($\approx V_d / d_d$ for the former case) that actually decreases with N_d; however, one cannot in reality increase d_d or h_d too much, because then the undesired capacitance fringing electric fields would become very large and/or the size of the coil might become too large; and, in any case, for certain applications extremely high voltages are not desired. A similar increasing behavior is observed for the source $P_{rad,s}$ and V_s upon increasing N_s. As a conclusion, the number of turns N_s and N_d have to be chosen the largest possible (for efficiency) that allow for reasonable voltages, fringing electric fields and physical sizes.

With respect to frequency, again, there is an optimal one for efficiency, and Q_{tot} is approximately maximum, close to that optimal frequency. For lower frequencies the currents get worse (larger) but the voltages and radiated powers get better (smaller). Usually, one should pick either the optimal frequency or somewhat lower.

One way to decide on an operating regime for the system is based on a graphical method. In Fig. 12, for two loops of $r_s = 25cm,\ r_d = 15cm,\ h_s = h_d = 0,\ a_s = a_d = 3mm$ and distance $D = 2m$ between them, we plot all the above dependent variables (currents, voltages and radiated powers normalized to *1Watt* of output power) in terms of frequency and N_d, given some choice for *wp* and N_s. The Figure depicts all of the dependencies explained above. We can also make a contour plot of the dependent variables as functions of both frequency and *wp* but for both N_s and N_d fixed. The results are shown in Fig. 13 for the same loop dimensions and distance. For example, a reasonable choice of parameters for the system of two loops with the dimensions given above are: $N_s = 2,\ N_d = 6$, *f=10MHz* and *wp=10*, which gives the following performance characteristics: $\eta_{work} = 20.6\%,\ Q_{tot} = 1264,\quad I_s = 7.2A,\ I_d = 1.4A,$

InductEV, Inc.
Exhibit 1031
Page 067

$V_s = 2.55kV$, $V_d = 2.30kV$, $P_{rad,s} = 0.15W$, $P_{rad,d} = 0.006W$. Note that the results in Figures 12 and 13, and the just above calculated performance characteristics are made using the analytical formulas provided above, so they are expected to be less accurate for large values of N_s, N_d, still they give a good estimate of the scalings and the orders of magnitude.

Finally, one could additionally optimize for the source dimensions, since usually only the device dimensions are limited, as discussed earlier. Namely, one can add r_s and a_s in the set of independent variables and optimize with respect to these too for all the dependent variables of the problem (we saw how to do this only for efficiency earlier). Such an optimization would lead to improved results.

Experimental Results

An experimental realization of an embodiment of the above described scheme for wireless energy transfer consists of two self-resonant coils of the type described above, one of which (the source coil) is coupled inductively to an oscillating circuit, and the second (the device coil) is coupled inductively to a resistive load, as shown schematically in Fig. 14. Referring to Fig. 14, A is a single copper loop of radius 25cm that is part of the driving circuit, which outputs a sine wave with frequency 9.9MHz. s and d are respectively the source and device coils referred to in the text. B is a loop of wire attached to the load ("light-bulb"). The various κ's represent direct couplings between the objects. The angle between coil d and the loop A is adjusted so that their direct coupling is zero, while coils s and d are aligned coaxially. The direct coupling between B and A and between B and s is negligible.

The parameters for the two identical helical coils built for the experimental validation of the power transfer scheme were $h = 20\,\text{cm}$, $a = 3\,\text{mm}$, $r = 30$ cm, $N = 5.25$. Both coils are made of copper. Due to imperfections in the construction, the spacing between loops of the helix is not uniform, and we have encapsulated the uncertainty about their uniformity by attributing a 10% (2 cm) uncertainty to h. The expected resonant frequency given these dimensions is $f_0 = 10.56 \pm 0.3\,\text{MHz}$, which is

about 5% off from the measured resonance at around 9.90 MHz.

The theoretical Q for the loops is estimated to be ~ 2500 (assuming perfect copper of resistivity $\rho = 1/\sigma = 1.7 \times 10^{-8} \Omega$m) but the measured value is 950 ± 50. We believe the discrepancy is mostly due to the effect of the layer of poorly conducting copper oxide on the surface of the copper wire, to which the current is confined by the short skin depth ($\sim 20 \mu$m) at this frequency. We have therefore used the experimentally observed Q (and $\Gamma_1 = \Gamma_2 = \Gamma = \omega/(2Q)$ derived from it) in all subsequent computations.

The coupling coefficient κ can be found experimentally by placing the two self-resonant coils (fine-tuned, by slightly adjusting h, to the same resonant frequency when isolated) a distance D apart and measuring the splitting in the frequencies of the two resonant modes in the transmission spectrum. According to coupled-mode theory, the splitting in the transmission spectrum should be $\Delta\omega = 2\sqrt{\kappa^2 - \Gamma^2}$. The comparison between experimental and theoretical results as a function of distance when the two the coils are aligned coaxially is shown in Fig.15.

Fig. 16 shows a comparison of experimental and theoretical values for the parameter κ/Γ as a function of the separation between the two coils. The theory values are obtained by using the theoretically obtained κ and the experimentally measured Γ. The shaded area represents the spread in the theoretical κ/Γ due to the $\sim 5\%$ uncertainty in Q.

As noted above, the maximum theoretical efficiency depends only on the parameter $\kappa/\sqrt{\Gamma_1\Gamma_2} = \kappa/\Gamma$, plotted as a function of distance in Fig. 17. The coupling to loss ratio κ/Γ is greater than 1 even for $D = 2.4$ m (eight times the radius of the coils), thus the sytem is in the strongly-coupled regime throughout the entire range of distances probed.

The power supply circuit was a standard Colpitts oscillator coupled inductively to the source coil by means of a single loop of copper wire 25cm in radius (see Fig. 14). The load consisted of a previously calibrated light-bulb, and was attached to its own loop of insulated wire, which was in turn placed in proximity of the device coil and inductively coupled to it. Thus, by varying the distance between the light-bulb and the device coil, the parameter Γ_{work}/Γ was adjusted so that it matched its optimal value, given

InductEV, Inc.
Exhibit 1031
Page 069

theoretically by $\sqrt{1+\kappa^2/(\Gamma_1\Gamma_2)}$. Because of its inductive nature, the loop connected to the light-bulb added a small reactive component to Γ_{work} which was compensated for by slightly retuning the coil. The work extracted was determined by adjusting the power going into the Colpitts oscillator until the light-bulb at the load was at its full nominal brightness.

In order to isolate the efficiency of the transfer taking place specifically between the source coil and the load, we measured the current at the mid-point of each of the self-resonant coils with a current-probe (which was not found to lower the Q of the coils noticeably.) This gave a measurement of the current parameters I_1 and I_2 defined above. The power dissipated in each coil was then computed from $P_{1,2} = \Gamma L |I_{1,2}|^2$, and the efficiency was directly obtained from $\eta = P_{work}/(P_1 + P_2 + P_{work})$. To ensure that the experimental setup was well described by a two-object coupled-mode theory model, we positioned the device coil such that its direct coupling to the copper loop attached to the Colpitts oscillator was zero. The experimental results are shown in Fig. 17, along with the theoretical prediction for maximum efficiency, given by Eq.(14).

Using this embodiment, we were able to transfer significant amounts of power using this setup, fully lighting up a 60W light-bulb from distances more than 2m away, for example. As an additional test, we also measured the total power going into the driving circuit. The efficiency of the wireless transfer itself was hard to estimate in this way, however, as the efficiency of the Colpitts oscillator itself is not precisely known, although it is expected to be far from 100%. Nevertheless, this gave an overly conservative lower bound on the efficiency. When transferring 60W to the load over a distance of 2m, for example, the power flowing into the driving circuit was 400W. This yields an overall wall-to-load efficiency of $\sim 15\%$, which is reasonable given the expected $\sim 40\%$ efficiency for the wireless power transfer at that distance and the low efficiency of the driving circuit.

From the theoretical treatment above, we see that in typical embodiments it is important that the coils be on resonance for the power transfer to be practical. We found experimentally that the power transmitted to the load dropped sharply as one of the coils was detuned from resonance. For a fractional detuning $\Delta f/f_0$ of a few times the inverse

loaded Q, the induced current in the device coil was indistinguishable from noise.

The power transfer was not found to be visibly affected as humans and various everyday objects, such as metallic and wooden furniture, as well as electronic devices large and small, were placed between the two coils, even when they drastically obstructed the line of sight between source and device. External objects were found to have an effect only when they were closer than 10cm from either one of the coils. While some materials (such as aluminum foil, styrofoam and humans) mostly just shifted the resonant frequency, which could in principle be easily corrected with a feedback circuit of the type described earlier, others (cardboard, wood, and PVC) lowered Q when placed closer than a few centimeters from the coil, thereby lowering the efficiency of the transfer.

We believe that this method of power transfer should be safe for humans. When transferring 60W (more than enough to power a laptop computer) across 2m, we estimated that the magnitude of the magnetic field generated is much weaker than the Earth's magnetic field for all distances except for less than about 1cm away from the wires in the coil, an indication of the safety of the scheme even after long-term use. The power radiated for these parameters was ~ 5 W, which is roughly an order of magnitude higher than cell phones but could be drastically reduced, as discussed below.

Although the two coils are currently of identical dimensions, it is possible to make the device coil small enough to fit into portable devices without decreasing the efficiency. One could, for instance, maintain the product of the characteristic sizes of the source and device coils constant.

These experiments demonstrated experimentally a system for power transfer over medium range distances, and found that the experimental results match theory well in multiple independent and mutually consistent tests.

We believe that the efficiency of the scheme and the distances covered could be appreciably improved by silver-plating the coils, which should increase their Q, or by working with more elaborate geometries for the resonant objects. Nevertheless, the performance characteristics of the system presented here are already at levels where they could be useful in practical applications.

InductEV, Inc.
Exhibit 1031
Page 071

Applications

In conclusion, we have described several embodiments of a resonance-based scheme for wireless non-radiative energy transfer. Although our consideration has been for a static geometry (namely κ and Γ_e were independent of time), all the results can be applied directly for the dynamic geometries of mobile objects, since the energy-transfer time κ^{-1} (~1μs -1ms for microwave applications) is much shorter than any timescale associated with motions of macroscopic objects. Analyses of very simple implementation geometries provide encouraging performance characteristics and further improvement is expected with serious design optimization. Thus the proposed mechanism is promising for many modern applications.

For example, in the macroscopic world, this scheme could potentially be used to deliver power to for example, robots and/or computers in a factory room, or electric buses on a highway. In some embodiments source-object could be an elongated "pipe" running above the highway, or along the ceiling.

Some embodiments of the wireless transfer scheme can provide energy to power or charge devices that are difficult or impossible to reach using wires or other techniques. For example some embodiments may provide power to implanted medical devices (e.g. artificial hearts, pacemakers, medicine delivery pumps, etc.) or buried underground sensors.

In the microscopic world, where much smaller wavelengths would be used and smaller powers are needed, one could use it to implement optical inter-connects for CMOS electronics, or to transfer energy to autonomous nano-objects (e.g. MEMS or nano-robots) without worrying much about the relative alignment between the sources and the devices. Furthermore, the range of applicability could be extended to acoustic systems, where the source and device are connected via a common condensed-matter object.

In some embodiments, the techniques described above can provide non-radiative wireless transfer of information using the localized near fields of resonant object. Such schemes provide increased security because no information is radiated into the far-field, and are well suited for mid-range communication of highly sensitive information.

A number of embodiments of the invention have been described. Nevertheless, it

InductEV, Inc.
Exhibit 1031
Page 072

will be understood that various modifications may be made without departing from the spirit and scope of the invention.

InductEV, Inc.
Exhibit 1031
Page 073

WHAT IS CLAIMED IS:

1. A power supply system comprising:

a power supply loop that is supplied with power from a power supply;

a power supply-side resonance coil that is supplied with power from the power supply loop in a non-contact manner;

a power receiving-side resonance coil that is supplied with power from the power supply-side resonance coil in a non-contact manner;

a power receiving loop that is supplied with power from the power receiving-side resonance coil in a non-contact manner;

wherein at least one of a distance between the power supply loop and the power supply-side resonance coil and a distance between the power receiving loop and the power receiving-side resonance coil is adjustable on the basis of a distance between the power supply-side resonance coil and the power receiving-side resonance coil.

2. The power supply system according to claim 1, wherein the at least one of the distance between the power supply loop and the power supply-side resonance coil and the distance between the power receiving loop and the power receiving-side resonance coil is adjustable so as to increase a power supply efficiency.

3. The power supply system according to claim 1, wherein at least one of an amount of deviation in coil axis between the power supply loop and the power supply-side resonance coil and an amount of deviation in coil axis between the power receiving loop and the power receiving-side resonance coil is adjustable on the basis of the distance between the power supply-side resonance coil and the power receiving-side resonance coil.

4. The power supply system according to claim 1, wherein at least one of an angle made between the power supply loop and the power supply-side resonance coil and an angle made between the power receiving loop and the power receiving-side resonance

InductEV, Inc.
Exhibit 1031
Page 074

coil is adjustable on the basis of the distance between the power supply-side resonance coil and the power receiving-side resonance coil.

5. The power supply system according to claim 1, wherein at least one of a radius of the power supply loop with respect to the power supply-side resonance coil and a radius of the power receiving loop is adjustable with respect to the power receiving-side resonance coil on the basis of the distance between the power supply-side resonance coil and the power receiving-side resonance coil.

6. The power supply system according to claim 1, wherein any one of a distance between the power supply loop and the power supply-side resonance coil, an amount of deviation in coil axis between the power supply loop and the power supply-side resonance coil, an angle made between the power supply loop and the power supply-side resonance coil, a radius of the power supply loop with respect to the power supply-side resonance coil, a distance between the power receiving loop and the power receiving-side resonance coil, an amount of deviation in coil axis between the power receiving loop and the power receiving-side resonance coil, an angle made between the power receiving loop and the power receiving-side resonance coil or a radius of the power receiving loop with respect to the power receiving-side resonance coil is adjustable on the basis of the distance between the power supply-side resonance coil and the power receiving-side resonance coil.

7. A power supply system comprising:

a power supply loop that is supplied with power from a power supply;

a power supply-side resonance coil that is supplied with power from the power supply loop in a non-contact manner;

a power receiving-side resonance coil that is supplied with power from the power supply-side resonance coil in a non-contact manner;

a power receiving loop that is supplied with power from the power receiving-side resonance coil in a non-contact manner;

InductEV, Inc.
Exhibit 1031
Page 075

wherein at least one of a distance between the power supply loop and the power supply-side resonance coil and a distance between the power receiving loop and the power receiving-side resonance coil is adjustable to be shorter when a distance between the power supply-side resonance coil and the power receiving-side resonance coil is short, as compared to when the distance between the power supply side-side resonance coil and the power receiving-side resonance coil is long.

8. A power receiving device comprising:

a power receiving-side resonance coil that is supplied with power from a power supply-side resonance coil at a power supply device in a non-contact manner;

a power receiving loop that is supplied with power from the power receiving-side resonance coil in a non-contact manner;

wherein a distance between the power receiving loop and the power receiving-side resonance coil is adjustable on the basis of a distance between the power supply-side resonance coil and the power receiving-side resonance coil.

9. A power receiving device comprising:

a power receiving-side resonance coil that is supplied with power from a power supply-side resonance coil at a power supply device in a non-contact manner;

a power receiving loop that is supplied with power from the power receiving-side resonance coil in a non-contact manner;

wherein a distance between the power receiving loop and the power receiving-side resonance coil is adjustable to be shorter when a distance between the power supply-side resonance coil and the power receiving-side resonance coil is short, as compared to when the distance between the power supply side-side resonance coil and the power receiving-side resonance coil is long.

10. A power supply device comprising:

a power supply loop that is supplied with power from a power supply;

a power supply-side resonance coil that is supplied with power from the power supply loop in a non-contact manner and supplies power to a power receiving-side resonance coil at a receiving device in a non-contact manner;

wherein a distance between the power supply loop and the power supply-side resonance coil is adjustable on the basis of a distance between the power supply-side resonance coil and the power receiving-side resonance coil.

11. A power supply device comprising:

a power supply loop that is supplied with power from a power supply;

a power supply-side resonance coil that is supplied with power from the power supply loop in a non-contact manner and supplies power to a power receiving-side resonance coil at a receiving device in a non-contact manner;

wherein a distance between the power supply loop and the power supply-side resonance coil is adjustable to be shorter when a distance between the power supply-side resonance coil and the power receiving-side resonance coil is short, as compared to when the distance between the power supply-side resonance coil and the power receiving-side resonance coil is long.

12. A method of controlling a power supply system comprising:

supplying power to a power supply loop from a power supply;

supplying power to a power supply-side resonance coil from the power supply loop in a non-contact manner; supplying power to a power receiving-side resonance coil from the power supply-side resonance coil in a non-contact manner;

supplying power to a power receiving loop from the power receiving-side resonance coil in a non-contact manner; and

adjusting at least one of a distance between the power supply loop and the power supply-side resonance coil and a distance between the power receiving loop and the power receiving-side resonance coil on the basis of a distance between the power supply-side resonance coil and the power receiving-side resonance coil.

InductEV, Inc.
Exhibit 1031
Page 077

13. The method of controlling the power system according to claim 12, wherein the adjusting includes making shorter the at least one of the distance between the power supply loop and the power supply-side resonance coil and the distance between the power receiving loop and the power receiving-side resonance coil when the distance between the power supply-side resonance coil and the power receiving-side resonance coil is short, as compared to when the distance between the power supply side-side resonance coil and the power receiving-side resonance coil is long.

14. A power supply system comprising:

a power supply loop that is supplied with power from a power supply;

a power supply-side resonance coil that is supplied with power from the power supply loop in a non-contact manner;

a power receiving-side resonance coil that is supplied with power from the power supply-side resonance coil in a non-contact manner;

a power receiving loop that is supplied with power from the power receiving-side resonance coil in a non-contact manner;

wherein a distance between the power receiving loop and the power receiving-side resonance coil is adjustable on the basis of a distance between the power supply-side resonance coil and the power receiving-side resonance coil.

15. The power supply system according to claim 14, wherein the distance between the power receiving loop and the power receiving-side resonance coil is adjustable so as to increase a power supply efficiency.

16. A power supply system comprising:

a power supply loop that is supplied with power from a power supply;

a power supply-side resonance coil that is supplied with power from the power supply loop in a non-contact manner;

a power receiving-side resonance coil that is supplied with power from the power supply-side resonance coil in a non-contact manner;

a power receiving loop that is supplied with power from the power receiving-side resonance coil in a non-contact manner;

wherein a distance between the power receiving loop and the power receiving-side resonance coil is adjustable to be shorter when a distance between the power supply-side resonance coil and the power receiving-side resonance coil is short, as compared to when the distance between the power supply side-side resonance coil and the power receiving-side resonance coil is long.

17. A method of controlling a power supply system comprising:

supplying power to a power supply loop from a power supply;

supplying power to a power supply-side resonance coil from the power supply loop in a non-contact manner; supplying power to a power receiving-side resonance coil from the power supply-side resonance coil in a non-contact manner;

supplying power to a power receiving loop from the power receiving-side resonance coil in a non-contact manner; and

adjusting a distance between the power receiving loop and the power receiving-side resonance coil on the basis of a distance between the power supply-side resonance coil and the power receiving-side resonance coil.

18. The method of controlling the power system according to claim 17, wherein the adjusting includes making shorter the distance between the power receiving loop and the power receiving-side resonance coil when the distance between the power supply-side resonance coil and the power receiving-side resonance coil is short, as compared to when the distance between the power supply side-side resonance coil and the power receiving-side resonance coil is long.

InductEV, Inc.
Exhibit 1031
Page 079

ABSTRACT

Disclosed is an apparatus for use in wireless energy transfer, which includes a first resonator structure configured to transfer energy non-radiatively with a second resonator structure over a distance greater than a characteristic size of the second resonator structure. The non-radiative energy transfer is mediated by a coupling of a resonant field evanescent tail of the first resonator structure and a resonant field evanescent tail of the second resonator structure.

22994601.doc

InductEV, Inc.
Exhibit 1031
Page 080

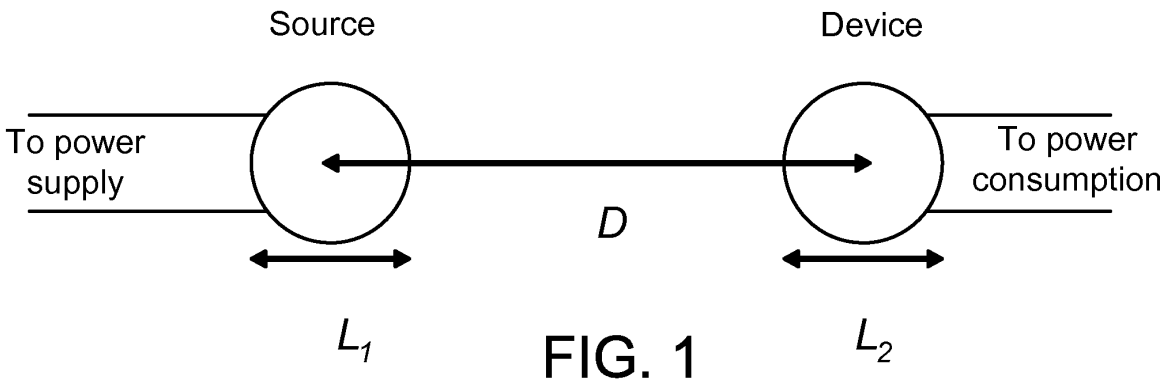

FIG. 1

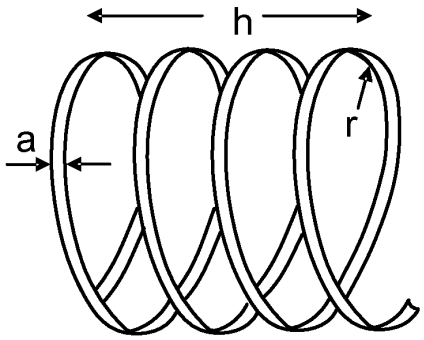

FIG. 2

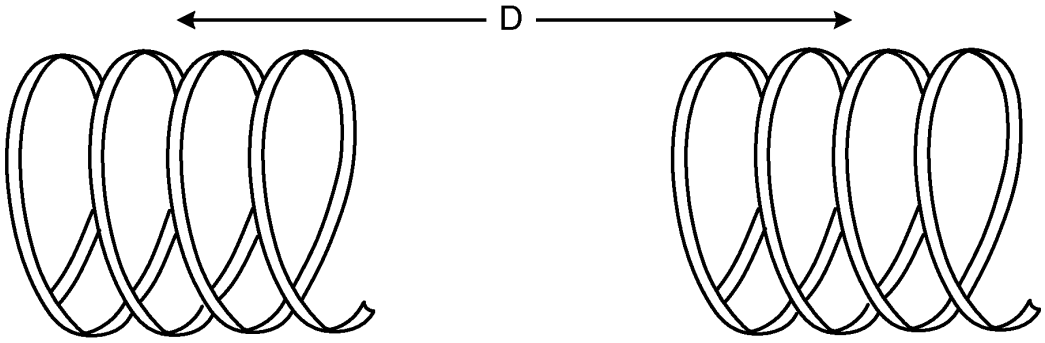

FIG. 3

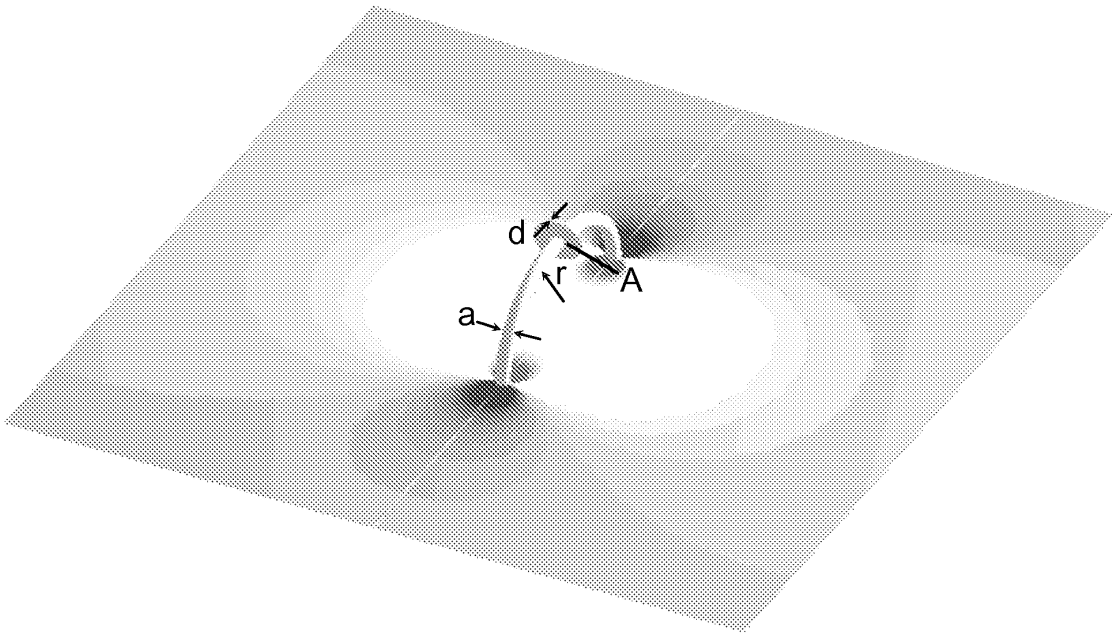

FIG. 4

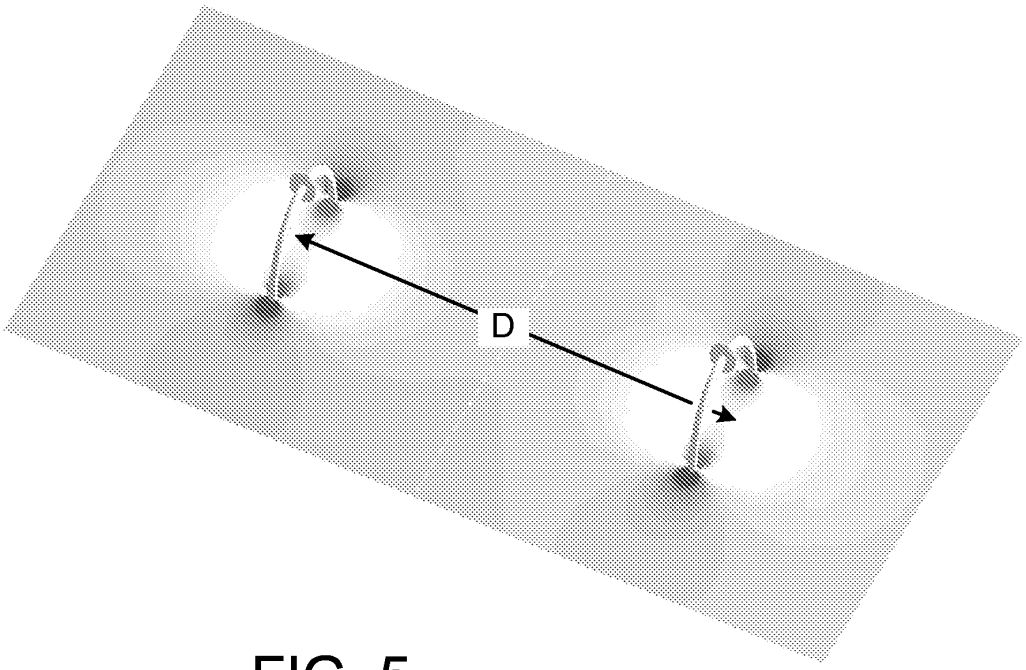

FIG. 5

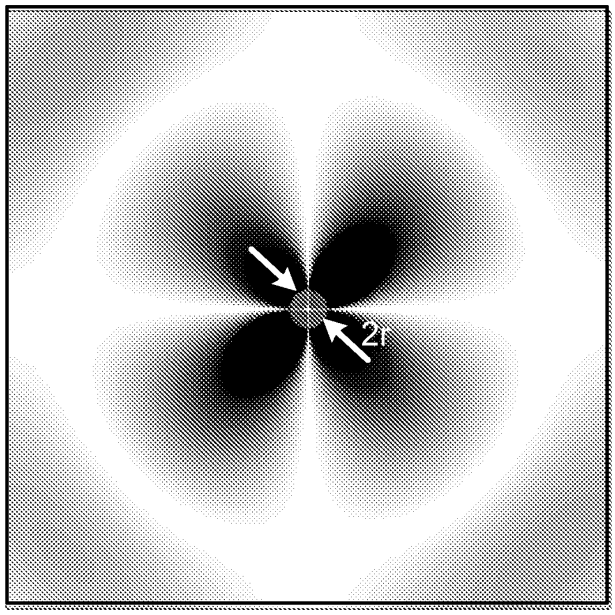

FIG. 6

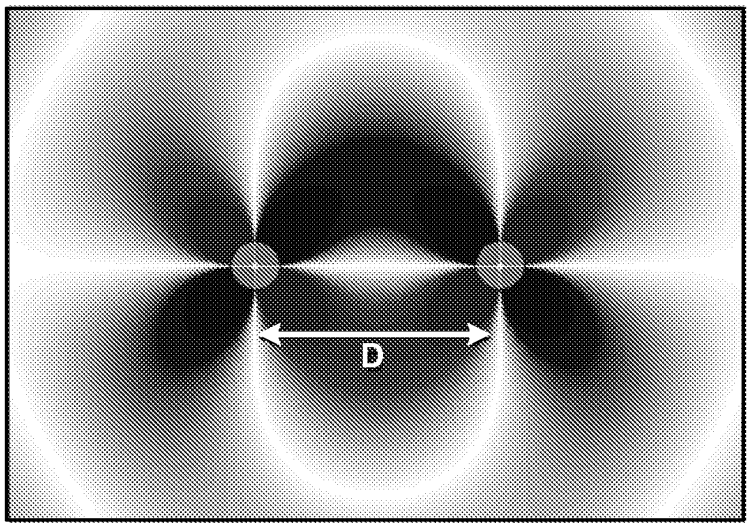

FIG. 7

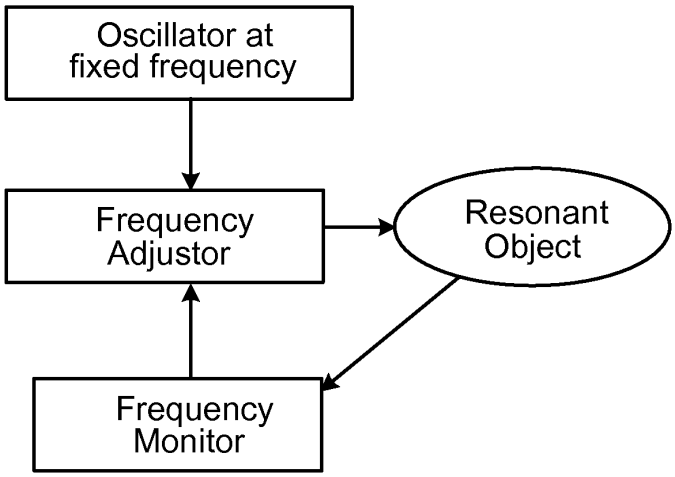
Oscillator at fixed frequency
Frequency Adjustor
Resonant Object
Frequency Monitor

FIG. 8A

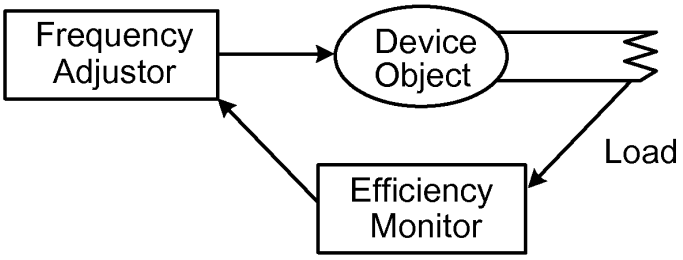
Frequency Adjustor
Device Object
Load
Efficiency Monitor

FIG. 8B

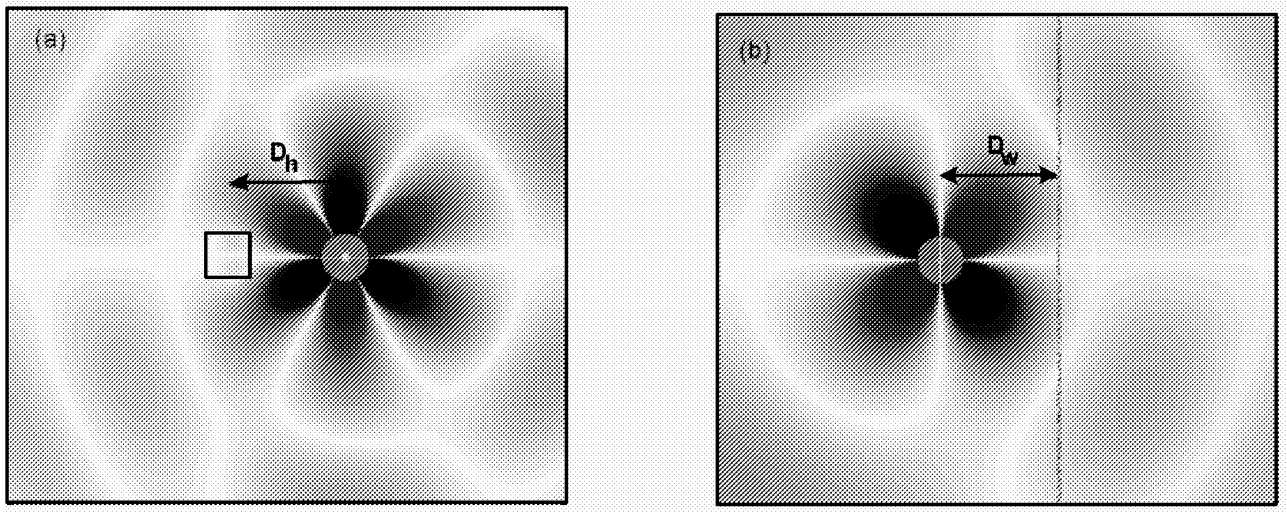

Disk with "human"	D_h/r	$Q_{c\text{-}h}^{abs}$	$Q_{c[h]}^{rad}$	$Q_{c[h]}$
Re{ε}=147.7, m=2	3	230	981	183
$\lambda/r \approx 20$	5	2917	1984	1057
$Q_c^{abs} \approx 10096$	7	11573	2230	1578
	10	41496	2201	1732
Re{ε}=65.6, m=3	3	1827	6197	1238
$\lambda/r \approx 10$	**5**	**58431**	**11808**	**4978**
$Q_c^{abs} \approx 10096$	7	249748	9931	4908
	10	867552	9078	4754

FIG. 9A

Disk with "wall"	D_w/r	$Q_{c\text{-}w}^{abs}$	$Q_{c[w]}^{rad}$	$Q_{c[w]}$
Re{ε}=147.7, m=2	3	16725	1235	1033
$\lambda/r \approx 20$	**5**	**31659**	**1922**	**1536**
$Q_c^{abs} \approx 10098$	7	49440	2389	1859
	10	82839	2140	1729
Re{ε}=65.6, m=3	3	53154	6228	3592
$\lambda/r \approx 10$	5	127402	10988	5053
$Q_c^{abs} \approx 10097$	7	159192	10168	4910
	10	191506	9510	4775

FIG. 9B

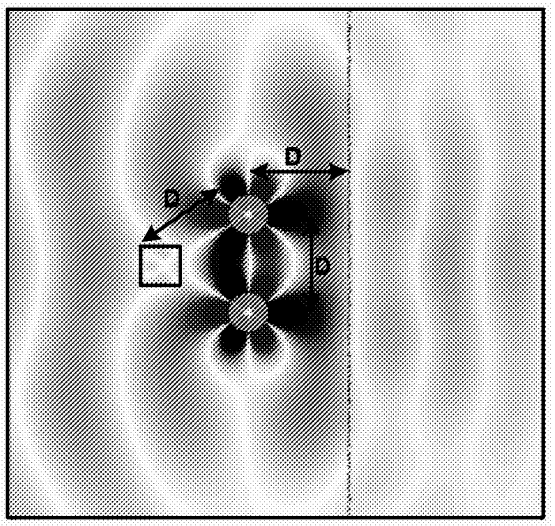

Two disks with "human" and "wall"	D/r	$Q_{c\text{-}h}^{abs}$	$Q_{c\text{-}w}^{abs}$	$Q_{c[hw]}^{rad}$	$Q_{c[hw]} = \omega/2\Gamma_{c[hw]}$	$\omega/2\kappa_{[hw]}$	$\kappa_{[hw]}/\Gamma_{c[hw]}$
Re{ε}=147.7, m=2	3	3300	12774	536	426	48	8.8
$\lambda/r \approx 20$	5	5719	26333	1600	1068	322	3.3
$Q_c^{abs} \approx 10100$	7	13248	50161	3542	2097	973	2.2
	10	18447	68460	3624	2254	1768	1.3
Re{ε}=65.6, m=3	3	2088	36661	6764	1328	141	9.4
$\lambda/r \approx 10$	**5**	**72137**	**90289**	**11945**	**4815**	**2114**	**2.3**
$Q_c^{abs} \approx 10100$	7	237822	129094	12261	5194	8307	0.6

FIG. 9C

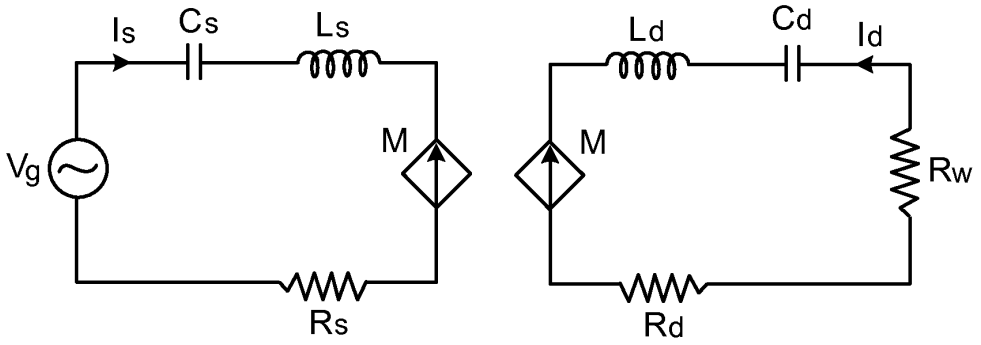
Is
Cs
Ls
Ld
Cd
Id
M
M
Vg
Rw
Rs
Rd

FIG. 10

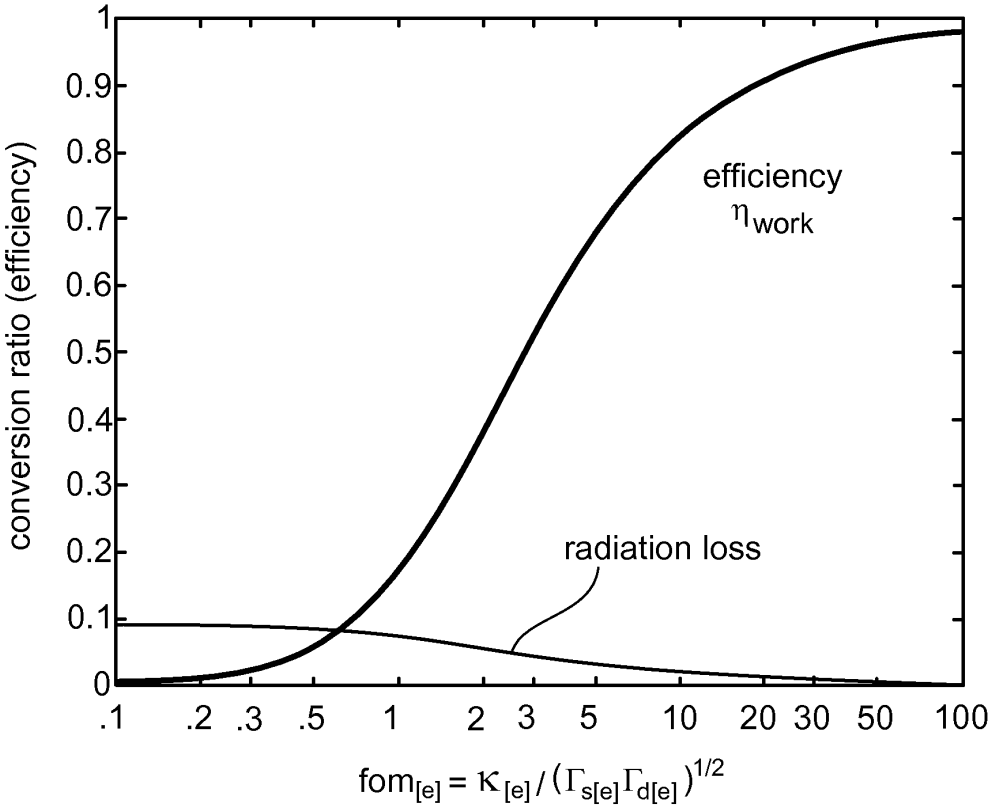
conversion ratio (efficiency)
1
0.9
0.8
0.7
0.6
0.5
0.4
0.3
0.2
0.1
0
efficiency
η_{work}
radiation loss
.1
.2
.3
.5
1
2
3
5
10
20
30
50
100
$fom_{[e]} = \kappa_{[e]} / (\Gamma_{s[e]}\Gamma_{d[e]})^{1/2}$

FIG. 11

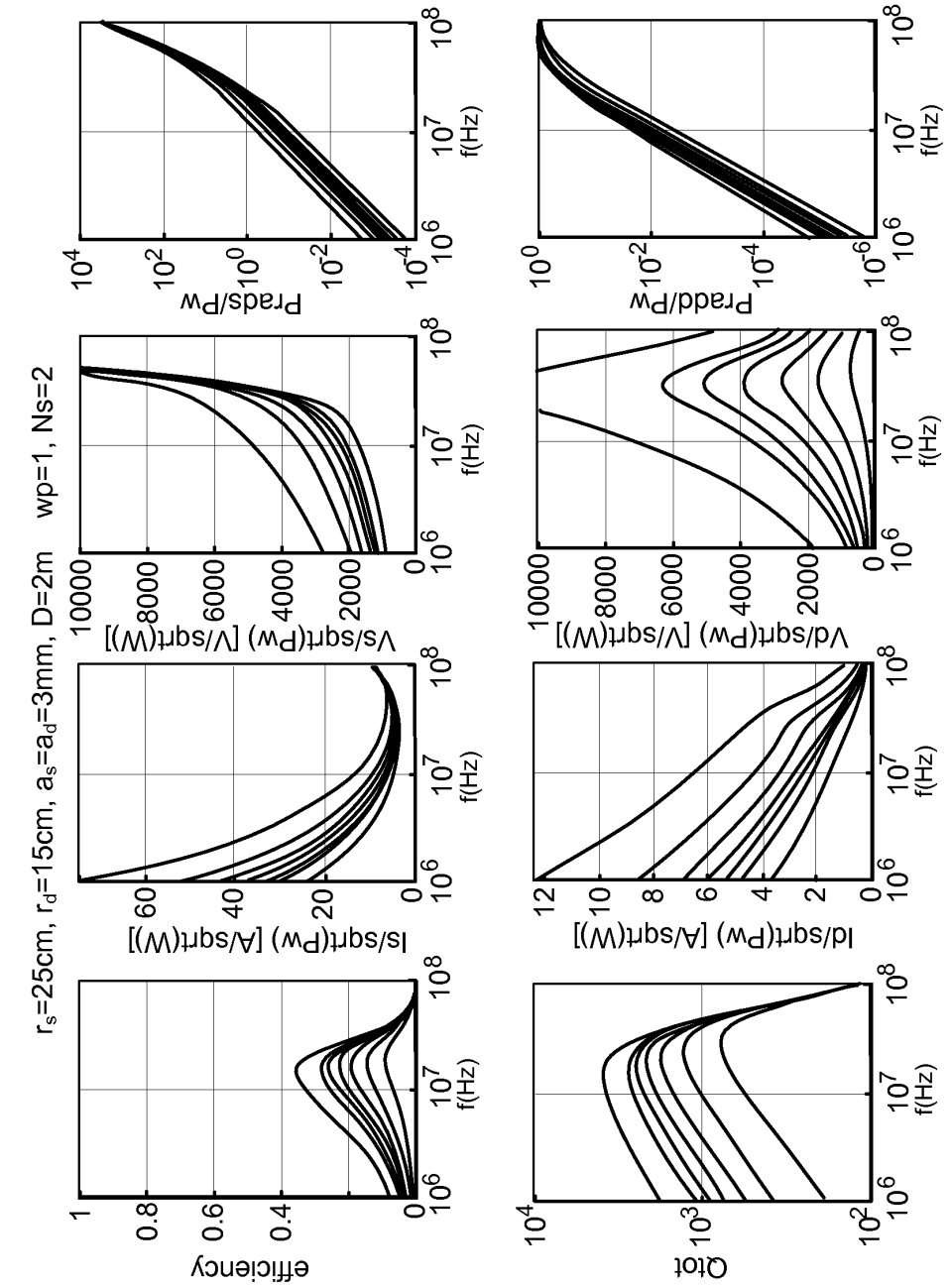
r_s=25cm, r_d=15cm, a_s=a_d=3mm, D=2m wp=1, Ns=2
efficiency
Is/sqrt(Pw) [A/sqrt(W)]
Vs/sqrt(Pw) [V/sqrt(W)]
Prads/Pw
Qtot
Id/sqrt(Pw) [A/sqrt(W)]
Vd/sqrt(Pw) [V/sqrt(W)]
Pradd/Pw
f(Hz)

FIG. 12

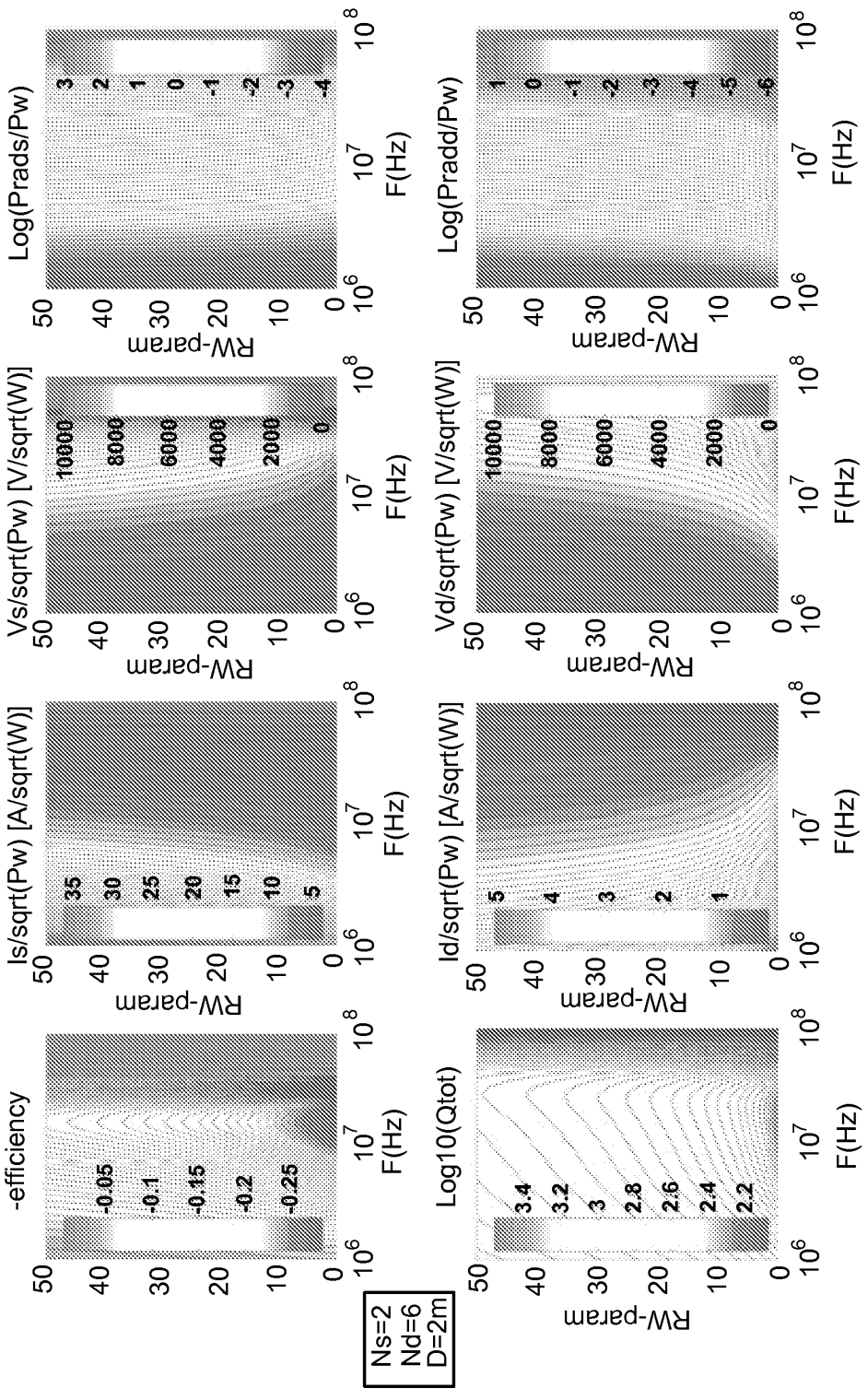
-efficiency
Ls/sqrt(Pw) [A/sqrt(W)]
Vs/sqrt(Pw) [V/sqrt(W)]
Log(Prads/Pw)
Log10(Qtot)
Id/sqrt(Pw) [A/sqrt(W)]
Vd/sqrt(Pw) [V/sqrt(W)]
Log(Pradd/Pw)
RW-param
F(Hz)
Ns=2
Nd=6
D=2m

FIG. 13

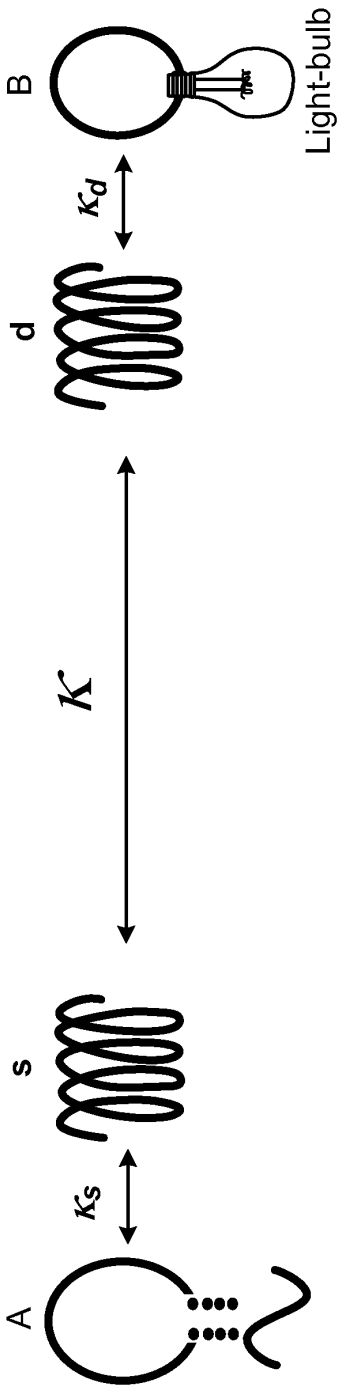

FIG. 14

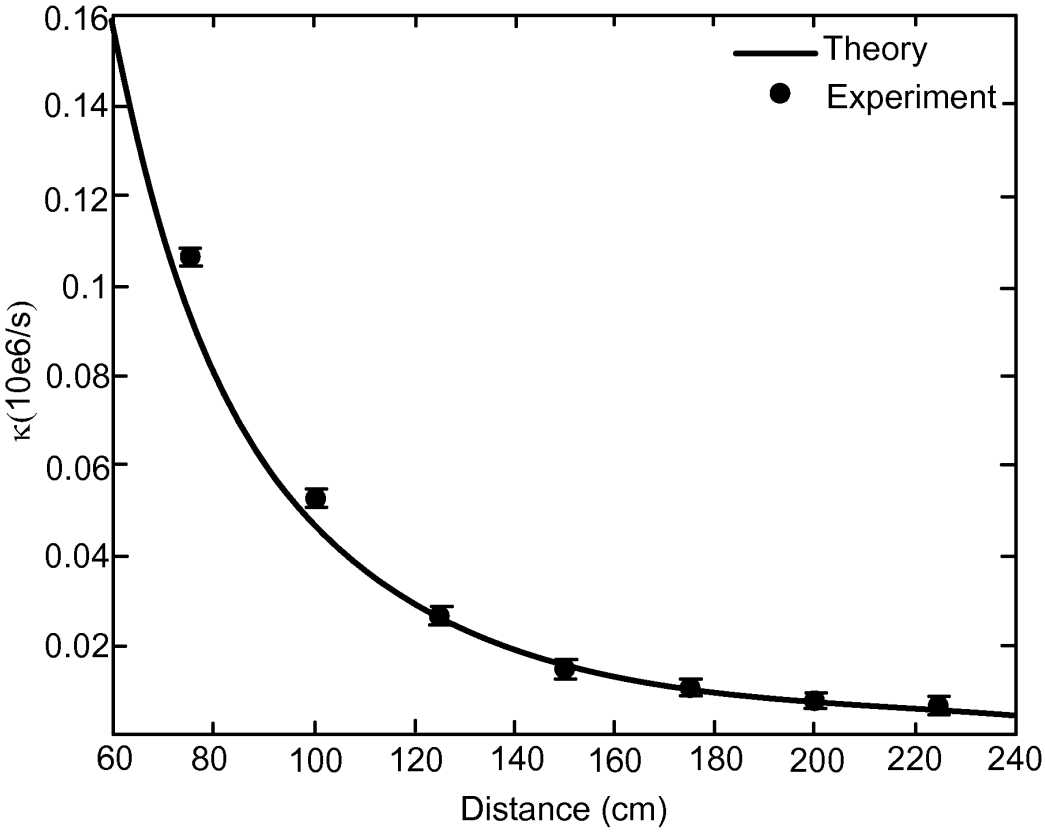
Theory
Experiment
κ(10e6/s)
0.16
0.14
0.12
0.1
0.08
0.06
0.04
0.02
60
80
100
120
140
160
180
200
220
240
Distance (cm)

FIG. 15

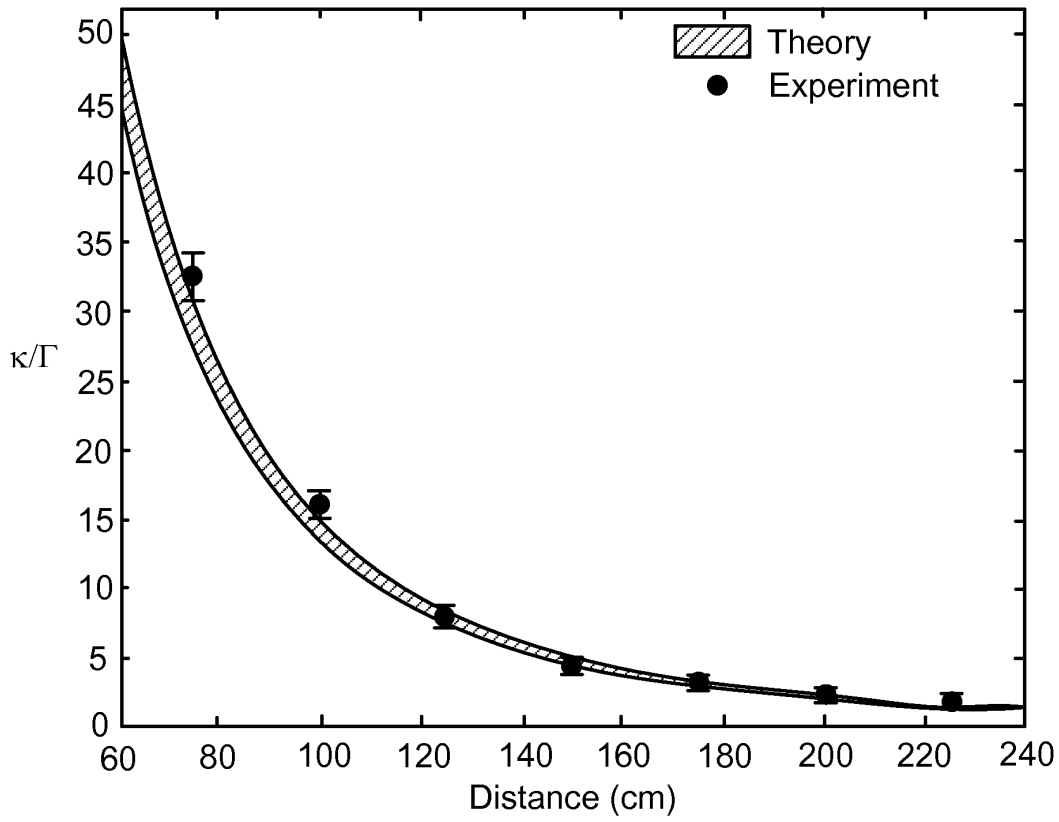
Theory
Experiment
κ/Γ
Distance (cm)
0
5
10
15
20
25
30
35
40
45
50
60
80
100
120
140
160
180
200
220
240

FIG.16

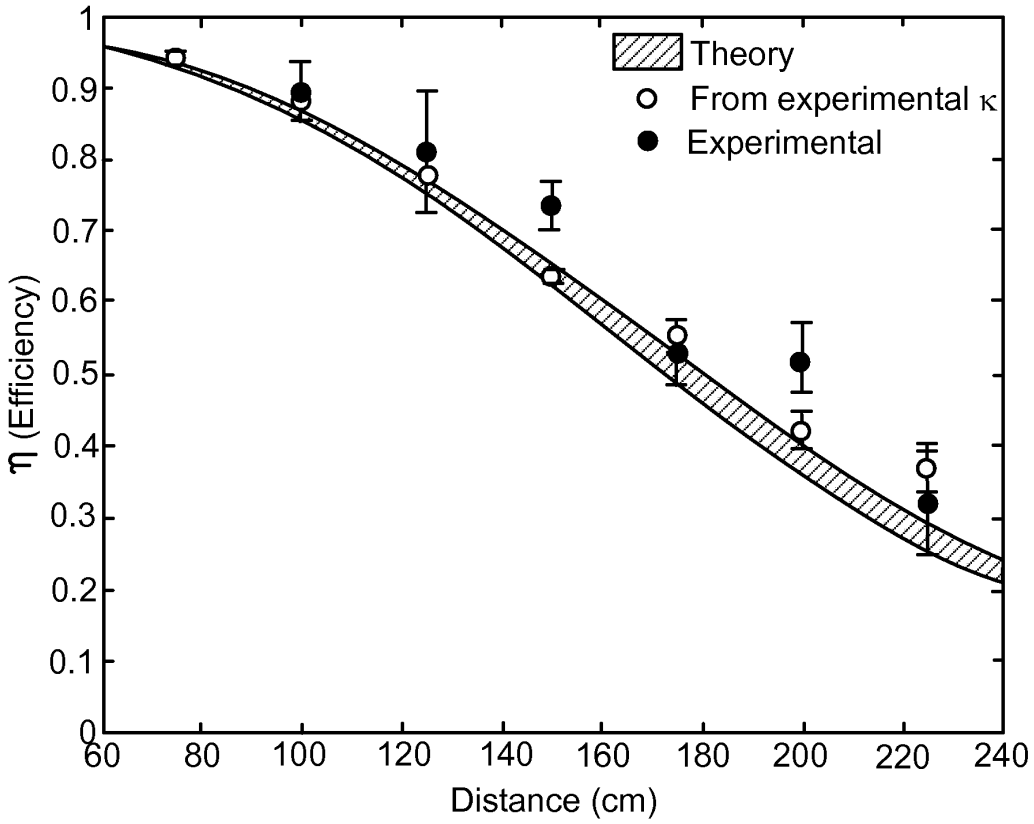
Theory
From experimental κ
Experimental
η (Efficiency)
Distance (cm)
0
0.1
0.2
0.3
0.4
0.5
0.6
0.7
0.8
0.9
1
60
80
100
120
140
160
180
200
220
240

FIG. 17

IN THE UNITED STATES PATENT AND TRADEMARK OFFICE

Applicant	: Aristeidis Karalis et al.	Art Unit	: Unknown
Serial No.	: Unknown	Examiner	: Unknown
Filed	: Herewith		
Title	: WIRELESS ENERGY TRANSFER		

Commissioner for Patents
P.O. Box 1450
Alexandria, VA 22313-1450

INFORMATION DISCLOSURE STATEMENT

The application substantially copies certain claims from U.S. Patent No. 8,178,995 to Amano et al., which issued May 15, 2012.

Please consider the references listed on the enclosed PTO-1449 form. Foreign patent documents and non-patent literature are enclosed; cited U.S. patents and patent application publications will be provided on request.

Under 35 USC §120, this application relies on the earlier filing date of application serial number 13/477,459, filed on May 22, 2012, application serial number 12/055,963, filed on March 26, 2008, application serial number 12/437,641, filed on May 8, 2009, and application serial number 13/036,177, filed on February 28, 2011. All of the references listed on the enclosed PTO-1449 form were submitted to and/or cited by the Office in the prior application and, therefore, are not provided in this application.

The applicant invites the examiner to consider the position of the examiner and replies by the applicant that have been set forth in the prosecution of the following U.S. patent applications. These applications are related to the present application under Section 120 and/or contain at least some material that is similar to the material set forth in the specification of this application. The applicant assumes that the examiner has direct access to these files, but will be happy to provide copies to the examiner upon request.

Application No.	Filing Date	Status
11/481,077	July 5, 2006	Issued
12/055,963	March 26, 2008	Issued
12/415,650	March 31, 2009	Issued
12/415,616	March 31, 2009	Issued
12/415,655	March 31, 2009	Issued
12/415,667	March 31, 2009	Issued
12/437,641	May 9, 2009	Issued
12/466,065	May 14, 2009	Issued
12/553,957	September 3, 2009	Abandoned
12/571,949	October 1, 2009	Issued
12/639,958	December 16, 2009	Published
12/639,961	December 16, 2009	Allowed
12/639,962	December 16, 2009	Allowed
12/639,963	December 16, 2009	Published
12/639,966	December 16, 2009	Allowed
12/639,967	December 16, 2009	Allowed
12/639,972	December 16, 2009	Allowed
12/646,442	December 23, 2009	Allowed
12/646,524	December 23, 2009	Allowed
12/649,635	December 30, 2009	Published
12/649,777	December 30, 2009	Published
12/649,813	December 30, 2009	Published
12/649,852	December 30, 2009	Published
12/649,904	December 30, 2009	Published
12/649,973	December 30, 2009	Published
12/688,305	January 15, 2010	Abandoned
12/688,339	January 15, 2010	Published
12/708,850	February 19, 2010	Published

Application No.	Filing Date	Status
12/713,556	February 26, 2010	Published
12/717,559	March 4, 2010	Published
12/726,742	March 18, 2010	Abandoned
12/726,913	March 18, 2010	Abandoned
12/726,953	March 18, 2010	Published
12/732,399	March 26, 2010	Published
12/949,504	November 18, 2010	Abandoned
12/949,544	November 18, 2010	Abandoned
12/949,580	November 18, 2010	Published
13/036,177	February 28, 2011	Abandoned
13/288,308	November 3, 2011	Published
13/477,459	May 22, 2012	Published
13/677,407	November 15, 2012	Pending

This statement is being filed with the application. Please apply any necessary charges or credits to Deposit Account 06-1050, referencing the above attorney docket number.

Respectfully submitted,

Date: March 8, 2013

/Marc M. Wefers Reg. No. 56,842/
Marc M. Wefers
Reg. No. 56,842

Customer Number 26161
Fish & Richardson P.C.
Telephone: (617) 542-5070
Facsimile: (877) 769-7945

22994607.doc

IN THE UNITED STATES PATENT AND TRADEMARK OFFICE

Applicant	: Peter H. Fisher et al.	Art Unit	: Unknown
Serial No.	: 12/055,963	Examiner	: Unknown
Filed	: March 26, 2008	Conf. No.	: 8709
Title	: WIRELESS ENERGY TRANSFER		

Commissioner for Patents
P.O. Box 1450
Alexandria, VA 22313-1450

POWER OF ATTORNEY BY ASSIGNEE; ELECTION OF ASSIGNEE TO CONDUCT PROSECUTION TO EXCLUSION OF INVENTORS; CERTIFICATE UNDER 37 CFR §3.73(B)

The undersigned, as authorized representative of the assignee of the entire right, title and interest in the above-identified application, hereby appoints

Timothy A. French, Reg. No. 30,175	Marc M. Wefers, Reg. No. 56,842
Lee Crews, Ph.D., Reg. No. 43,567	Faustino A. Lichauco, Reg. No. 41,942
John F. Hayden, Reg. No. 37,640	Elliott J. Mason, III, Reg. No. 56,569

as its attorney to prosecute the application and to transact all business in the Patent and Trademark Office connected therewith with full powers of substitution and revocation, said appointment to be to the exclusion of the inventors and their attorney(s) in accordance with the provisions of 37 CFR §3.71 *et seq.* of the Patent Office Rules of Practice.

Ownership is in the assignee by virtue of the assignment document, a copy of which is attached hereto. The documents evidencing ownership have been reviewed and to the best of the assignee's knowledge and belief, title is in the assignee.

Please direct all communications regarding the application to **Customer Number 26161**.

Signature: _____ Date: March 31, 2008

Typed name: DANIEL O'BRIEN

Title: INTELLECTUAL PROPERTY MANAGER
TECHNOLOGY LICENSING OFFICE

Assignee: Massachusetts Institute of Technology

MZW/czc

Fish & Richardson P.C.
Telephone: (617) 542-5070
Facsimile: (617) 542-8906

21887354.doc

ASSIGNMENT

For valuable consideration, we, Aristeidis Karalis, of 70 Pacific Street, Apt. 907, Cambridge, MA 02139; Andre B. Kurs, of 647 Cambridge Street, Apt. 2, Cambridge, MA 02141; Robert Moffatt, of 2205 Stirrup Iron Lane, Reston, VA 20191; John D. Joannopoulos, of 64 Douglas Road, Belmont, MA 02478; Peter H. Fisher, of 13 Cornelius Way, Cambridge, MA 02141; Marin Soljacic, of 44 Westlund Road, Belmont, MA 02478; hereby assign to MASSACHUSETTS INSTITUTE OF TECHNOLOGY, a corporation of Massachusetts, having a place of business at 77 Massachusetts Avenue, Cambridge, Massachusetts 02142-1324, and its successors and assigns (collectively hereinafter called "the Assignee"), the entire right, title and interest throughout the world in the inventions and improvements which are subject of an application for United States Patent signed by us, entitled WIRELESS ENERGY TRANSFER, filed March 26, 2008 , and assigned U.S. Serial Number 12/055,963 , this assignment including said application, any and all United States and foreign patents, utility models, and design registrations granted for any of said inventions or improvements, and the right to claim priority based on the filing date of said application under the International Convention for the Protection of Industrial Property, the Patent Cooperation Treaty, the European Patent Convention, and all other treaties of like purposes; and we authorize the Assignee to apply in all countries in our name or in its own name for patents, utility models, design registrations and like rights of exclusion and for inventors' certificates for said inventions and improvements; and we agree for ourselves and our respective heirs, legal representatives and assigns, without further compensation to perform such lawful acts and to sign such further applications, assignments, Preliminary Statements and other lawful documents as the Assignee may reasonably request to effectuate fully this assignment.

DATE: May 22, 2008

ARISTEIDIS KARALIS

STATE OF MASSACHUSETTS)
) SS.
COUNTY OF MIDDLESEX)

On May 22, 2008, before me, the undersigned, a notary public for the State of Massachusetts, there personally appeared ARISTEIDIS KARALIS personally known to me (or proved to me on the basis of satisfactory evidence) to be the person whose name is subscribed to this Assignment, who acknowledged having executed the same in his authorized capacity and that by his signature on this Assignment, the person or the entity upon behalf of which he acted, executed this Assignment.

WITNESS my hand and official seal.

Notary Public

CATHERINE M. SULLIVAN
Notary Public
Commonwealth of Massachusetts
My Commission Expires Mar 6, 2009

DATE: 05/27/2008

ANDRE B. KURS

STATE OF MASSACHUSETTS)
) SS.
COUNTY OF MIDDLESEX)

On May 27, 2008, before me, the undersigned, a notary public for the State of Massachusetts, there personally appeared ANDRE B. KURS personally known to me (or proved to me on the basis of satisfactory evidence) to be the person whose name is subscribed to this Assignment, who acknowledged having executed the same in his authorized capacity and that by his signature on this Assignment, the person or the entity upon behalf of which he acted, executed this Assignment.

WITNESS my hand and official seal.

Notary Public

CATHERINE M. SULLIVAN
Notary Public
Commonwealth of Massachusetts
My Commission Expires Mar 6, 2009

DATE: May 21, 2008 Robert A. Moffatt
ROBERT MOFFATT

STATE OF Massachusetts)
) SS.
COUNTY OF Middlesex)

Massachusetts ~~M.D~~ On May 21, 2008, before me, the undersigned, a notary public for the State of ~~Virginia~~, there personally appeared ROBERT MOFFATT personally known to me (or proved to me on the basis of satisfactory evidence) to be the person whose name is subscribed to this Assignment, who acknowledged having executed the same in his authorized capacity and that by his signature on this Assignment, the person or the entity upon behalf of which he acted, executed this Assignment.

WITNESS my hand and official seal.

Margaret Anne Udden
Notary Public

MARGARET ANNE UDDEN
Notary Public
Commonwealth of Massachusetts
My Commission Expires
March 26, 2015

DATE: May 17 2008

JOHN D. JOANNOPOULOS

STATE OF Massachusetts)
) SS.
COUNTY OF Middlesex)

On May 19, 2008, before me, the undersigned, a notary public for the State of Massachusetts, there personally appeared JOHN D. JOANNOPOULOS personally known to me (or proved to me on the basis of satisfactory evidence) to be the person whose name is subscribed to this Assignment, who acknowledged having executed the same in his authorized capacity and that by his signature on this Assignment, the person or the entity upon behalf of which he acted, executed this Assignment.

WITNESS my hand and official seal.

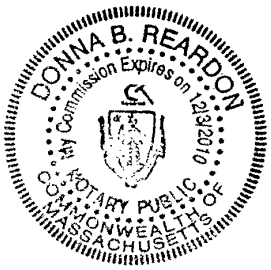

Donna B Reardon
Notary Public

DATE: May 28, 2008

PETER H. FISHER

STATE OF MA)
) SS.
COUNTY OF Middlesex)

On 5/28/2008, before me, the undersigned, a notary public for the State of Massachusetts, there personally appeared PETER H. FISHER personally known to me (or proved to me on the basis of satisfactory evidence) to be the person whose name is subscribed to this Assignment, who acknowledged having executed the same in his authorized capacity and that by his signature on this Assignment, the person or the entity upon behalf of which he acted, executed this Assignment.

WITNESS my hand and official seal.

Notary Public

HILARY W HOYT
MY COMM. EXPIRES SEPT. 6, 2013
COMMONWEALTH OF MASSACHUSETTS
NOTARY PUBLIC

DATE: 20 MAY 2008

MARIN SOLJACIC

STATE OF MA)
) SS.
COUNTY OF Middlesex)

On 5/20/08, before me, the undersigned, a notary public for the State of Massachusetts, there personally appeared MARIN SOLJACIC personally known to me (or proved to me on the basis of satisfactory evidence) to be the person whose name is subscribed to this Assignment, who acknowledged having executed the same in his authorized capacity and that by his signature on this Assignment, the person or the entity upon behalf of which he acted, executed this Assignment.

WITNESS my hand and official seal.

HILARY W HOYT
MY COMM. EXPIRES SEPT. 6, 2013
COMMONWEALTH OF MASSACHUSETTS
NOTARY PUBLIC

Notary Public

assignment-notary (with ca).doc

Substitute Disclosure Form	U.S. Department of Commerce Patent and Trademark Office	Attorney Docket No. 01997-0358008	Application No. Unknown
Information Disclosure Statement by Applicant (Use several sheets if necessary) (37 CFR §1.98(b))		Applicant Aristeidis Karalis et al.	
		Filing Date Herewith	Group Art Unit

U.S. Patent Documents

Examiner Initial	Desig. ID	Document Number	Publication Date	Patentee	Class	Subclass	Filing Date If Appropriate
	1	645,576	3/20/1900	Tesla			
	2	649,621	5/15/1900	Tesla			
	3	787,412	4/18/1905	Tesla			
	4	1,119,732	12/1/1914	Tesla			
	5	2,133,494	10/18/1938	H.F. Waters			
	6	3,517,350	6/23/1970	Beaver			
	7	3,535,543	10/20/1970	Dailey			
	8	4,088,999	5/9/1978	Fletcher et al.			
	9	5,034,658	7/23/1991	Hiering et al.			
	10	5,027,709	7/2/1991	Slagle			
	11	5,053,774	10/1/1991	Schuermann et al.			
	12	5,070,293	12/3/1991	Ishii et al.			
	13	5,118,997	6/2/1992	El-Hamamsy			
	14	5,216,402	6/1/1993	Carosa			
	15	5,287,112	2/15/1994	Schuermann			
	16	5,341,083	8/23/1994	Klontz et al.			
	17	5,367,242	11/22/1994	Hulman			
	18	5,437,057	7/25/1995	Richley et al.			
	19	5,455,467	10/3/1995	Young et al.			
	20	5,493,691	2/20/1996	Barrett			
	21	5,528,113	6/18/1996	Boys et al.			
	22	5,550,452	8/27/1996	Shirai et al.			
	23	5,898,579	4/27/1999	Boys et al.			
	24	5,986,895	11/16/1999	Stewart et al.			
	25	5,999,308	12/7/1999	Nelson et al.			
	26	6,184,651	2/6/2001	Fernandez et al.			
	27	6,436,299	8/20/2002	Baarman et al.			

Examiner Signature	Date Considered
EXAMINER: Initials citation considered. Draw line through citation if not in conformance and not considered. Include copy of this form with next communication to applicant.	

Substitute Disclosure Form

Substitute Disclosure Form	U.S. Department of Commerce Patent and Trademark Office	Attorney Docket No. 01997-0358008	Application No. Unknown
Information Disclosure Statement by Applicant (Use several sheets if necessary) (37 CFR §1.98(b))		Applicant Aristeidis Karalis et al.	
		Filing Date Herewith	Group Art Unit

U.S. Patent Documents

Examiner Initial	Desig. ID	Document Number	Publication Date	Patentee	Class	Subclass	Filing Date If Appropriate
	28	6,450,946	9/17/2002	Forsell			
	29	6,452,465	9/17/2002	Brown et al.			
	30	6,459,218	10/1/2002	Boys et al.			
	31	6,515,878	2/4/2003	Meins et al.			
	32	6,597,076	7/22/2003	Scheible et al.			
	33	6,664,770	12/16/2003	Bartels			
	34	6,673,250	1/6/2004	Kuennen et al.			
	35	6,731,071	5/4/2004	Baarman			
	36	6,749,119	6/15/2004	Scheible et al.			
	37	6,772,011	8/3/2004	Dolgin			
	38	6,798,716	9/28/2004	Charych			
	39	6,806,649	10/19/2004	Mollema et al.			
	40	6,812,645	11/2/2004	Baarman			
	41	6,825,620	11/30/2004	Kuennen et al.			
	42	6,831,417	12/14/2004	Baarman			
	43	6,844,702	1/18/2005	Giannopoulos et al.			
	44	6,856,291	2/15/2005	Mickle et al.			
	45	6,906,495	6/14/2005	Cheng et al.			
	46	6,917,163	7/12/2005	Baarman			
	47	6,917,431	7/12/2005	Soljacic et al.			
	48	6,937,130	8/30/2005	Scheible et al.			
	49	6,960,968	11/1/2005	Odendaal et al.			
	50	6,975,198	12/13/2005	Baarman			
	51	7,042,196	5/9/2006	Ka-Lai et al.			
	52	7,069,064	6/27/2006	Govorgian et al.			
	53	7,116,200	10/3/2006	Baarman et al.			
	54	7,118,240	10/10/2006	Baarman et al.			

Examiner Signature	Date Considered
EXAMINER: Initials citation considered. Draw line through citation if not in conformance and not considered. Include copy of this form with next communication to applicant.	

Substitute Disclosure Form

Substitute Disclosure Form	U.S. Department of Commerce Patent and Trademark Office	Attorney Docket No. 01997-0358008	Application No. Unknown
Information Disclosure Statement by Applicant (Use several sheets if necessary) (37 CFR §1.98(b))		Applicant Aristeidis Karalis et al.	
		Filing Date Herewith	Group Art Unit

U.S. Patent Documents

Examiner Initial	Desig. ID	Document Number	Publication Date	Patentee	Class	Subclass	Filing Date If Appropriate
	55	7,126,450	10/24/2006	Baarman et al.			
	56	7,132,918	11/7/2006	Baarman et al.			
	57	7,147,604	12/12/2006	Allen et al.			
	58	7,180,248	2/20/2007	Kuennen et al.			
	59	7,191,007	3/13/2007	Desai et al.			
	60	7,212,414	5/1/2007	Baarman			
	61	7,239,110	7/3/2007	Cheng et al.			
	62	7,248,017	7/24/2007	Cheng et al.			
	63	7,375,492	5/20/2008	Calhoon et al.			
	64	7,375,493	5/20/2008	Calhoon et al.			
	65	7,378,817	5/27/2008	Calhoon et al.			
	66	7,382,636	6/3/2008	Baarman et al.			
	67	7,385,357	6/10/2008	Kuennen et al.			
	68	7,462,951	12/9/2008	Baarman			
	69	7,466,213	12/16/2008	Lobl et al.			
	70	7,474,058	1/6/2009	Baarman			
	71	7,492,247	2/17/2009	Schmidt et al.			
	72	7,514,818	4/7/2009	Abe et al.			
	73	7,518,267	4/14/2009	Baarman			
	74	7,525,283	4/28/2009	Cheng et al.			
	75	7,599,743	10/6/2009	Hassler, Jr. et al.			
	76	7,615,936	11/10/2009	Baarman et al.			
	77	7,639,514	12/29/2009	Baarman			
	78	7,741,734	6/22/2010	Joannopoulos et al.			
	79	7,795,708	9/14/2010	Katti			
	80	7,825,543	11/2/2010	Karalis et al.			
	81	7,843,288	11/30/2010	Lee et al.			

Examiner Signature	Date Considered
EXAMINER: Initials citation considered. Draw line through citation if not in conformance and not considered. Include copy of this form with next communication to applicant.	

Substitute Disclosure Form

Substitute Disclosure Form	U.S. Department of Commerce Patent and Trademark Office	Attorney Docket No. 01997-0358008	Application No. Unknown
Information Disclosure Statement by Applicant (Use several sheets if necessary) (37 CFR §1.98(b))		Applicant Aristeidis Karalis et al.	
		Filing Date Herewith	Group Art Unit

U.S. Patent Documents

Examiner Initial	Desig. ID	Document Number	Publication Date	Patentee	Class	Subclass	Filing Date If Appropriate
	82	8,022,576	9/20/2011	Joannopoulos et al.			
	83	8,076,800	12/13/2011	Joannopoulos et al.			
	84	8,076,801	12/13/2011	Karalis et al.			
	85	8,084,889	12/27/2011	Joannopoulos et al.			
	86	8,097,983	1/17/2012	Karalis et al.			
	87	8,178,995	5/15/2012	Amano et al.			
	88	8,362,651	1/29/2013	Hamam et al.			
	89	8,395,282	3/12/2013	Joannopoulos et al.			
	90	8,395,283	3/12/2013	Joannopoulos et al.			
	91	8,400,018	3/19/2013	Joannopoulos et al.			
	92	8,400,019	3/19/2013	Joannopoulos et al.			
	93	8,400,020	3/19/2013	Joannopoulos et al.			
	94	8,400,021	3/19/2013	Joannopoulos et al.			
	95	8,400,022	3/19/2013	Joannopoulos et al.			
	96	8,400,023	3/19/2013	Joannopoulos et al.			
	97	8,400,024	3/19/2013	Joannopoulos et al.			
	98	2002/0032471	3/14/2002	Loftin et al.			
	99	2002/0105343	8/8/2002	Scheible et al.			
	100	2002/0118004	8/29/2002	Scheible et al.			
	101	2003/0038641	2/27/2003	Scheible			
	102	2003/0062794	4/3/2003	Scheible et al.			
	103	2003/0062980	4/3/2003	Scheible et al.			
	104	2003/0124050	7/3/2003	Yadav et al.			
	105	2003/0126948	7/10/2003	Yadav et al.			
	106	2003/0199778	10/23/2003	Mickle et al.			
	107	2003/0214255	11/20/2003	Baarman et al.			
	108	2004/0000974	1/1/2004	Odenaal et al.			

Examiner Signature	Date Considered
EXAMINER: Initials citation considered. Draw line through citation if not in conformance and not considered. Include copy of this form with next communication to applicant.	

Substitute Disclosure Form

Substitute Disclosure Form	U.S. Department of Commerce Patent and Trademark Office	Attorney Docket No. 01997-0358008	Application No. Unknown
Information Disclosure Statement by Applicant (Use several sheets if necessary) (37 CFR §1.98(b))		Applicant Aristeidis Karalis et al.	
		Filing Date Herewith	Group Art Unit

U.S. Patent Documents

Examiner Initial	Desig. ID	Document Number	Publication Date	Patentee	Class	Subclass	Filing Date If Appropriate
	109	2004/0100338	5/27/2004	Clark			
	110	2004/0113847	6/17/2004	Qi et al.			
	111	2004/0130915	7/8/2004	Baarman			
	112	2004/0130916	7/8/2004	Baarman			
	113	2004/0150934	8/5/2004	Baarman			
	114	2004/0201361	10/14/2004	Koh et al.			
	115	2004/0222751	11/11/2004	Mollema et al.			
	116	2004/0232845	11/25/2004	Baarman			
	117	2004/0233043	11/25/2004	Yazawa et al.			
	118	2004/0267501	12/30/2004	Freed et al.			
	119	2005/0007067	1/13/2005	Baarman et al.			
	120	2005/0085873	4/21/2005	Gord et al.			
	121	2005/0093475	5/5/2005	Kuennen et al.			
	122	2005/0104064	5/19/2005	Hegarty et al.			
	123	2005/0116650	6/2/2005	Baarman			
	124	2005/0122058	6/9/2005	Baarman et al.			
	125	2005/0122059	6/9/2005	Baarman et al.			
	126	2005/0127849	6/16/2005	Baarman et al.			
	127	2005/0127850	6/16/2005	Baarman et al.			
	128	2005/0127866	6/16/2005	Hamilton et al.			
	129	2005/0151511	7/14/2005	Chary			
	130	2005/0156560	7/21/2005	Shimaoka et al.			
	131	2005/0288739	12/29/2005	Hassler, Jr. et al.			
	132	2005/0288740	12/29/2005	Hassler, Jr. et al.			
	133	2005/0288741	12/29/2005	Hassler, Jr. et al.			
	134	2006/0022636	2/2/2006	Xian et al.			
	135	2006/0061323	3/23/2006	Cheng et al.			

Examiner Signature	Date Considered
EXAMINER: Initials citation considered. Draw line through citation if not in conformance and not considered. Include copy of this form with next communication to applicant.	

Substitute Disclosure Form

Substitute Disclosure Form	U.S. Department of Commerce Patent and Trademark Office	Attorney Docket No. 01997-0358008	Application No. Unknown
Information Disclosure Statement by Applicant (Use several sheets if necessary) (37 CFR §1.98(b))		Applicant Aristeidis Karalis et al.	
		Filing Date Herewith	Group Art Unit

U.S. Patent Documents

Examiner Initial	Desig. ID	Document Number	Publication Date	Patentee	Class	Subclass	Filing Date If Appropriate
	136	2006/0090956	5/4/2006	Peshkovskiy et al.			
	137	2006/0132045	6/22/2006	Baarman			
	138	2006/0181242	8/17/2006	Freed et al.			
	139	2006/0185809	8/24/2006	Elfrink et al.			
	140	2006/0202665	9/14/2006	Hsu			
	141	2006/0205381	9/14/2006	Beart et al.			
	142	2006/0270440	11/30/2006	Shearer et al.			
	143	2007/0021140	1/25/2007	Keyes, IV et al.			
	144	2007/0064406	3/22/2007	Beart			
	145	2007/0145830	6/28/2007	Lee et al.			
	146	2007/0171681	7/26/2007	Baarman			
	147	2007/0178945	8/2/2007	Cook et al.			
	148	2007/0182367	8/9/2007	Partovi			
	149	2007/0222542	9/27/2007	Joannopoulos et al.			
	150	2007/0267918	11/22/2007	Gyland			
	151	2007/0276538	11/29/2007	Kjellsson et al.			
	152	2008/0012569	1/17/2008	Hall et al.			
	153	2008/0014897	1/7/2008	Cook et al.			
	154	2008/0030415	2/7/2008	Homan et al.			
	155	2008/0067874	3/20/2008	Tseng			
	156	2008/0191638	8/14/2008	Kuennen et al.			
	157	2008/0197710	8/21/2008	Kreitz et al.			
	158	2008/0211320	9/4/2008	Cook et al.			
	159	2008/0265684	10/30/2008	Farkas			
	160	2008/0266748	10/30/2008	Lee			
	161	2008/0278264	11/13/2008	Karalis et al.			
	162	2009/0010028	1/8/2009	Baarmen et al.			

Examiner Signature	Date Considered
EXAMINER: Initials citation considered. Draw line through citation if not in conformance and not considered. Include copy of this form with next communication to applicant.	

Substitute Disclosure Form

Substitute Disclosure Form	U.S. Department of Commerce Patent and Trademark Office	Attorney Docket No. 01997-0358008	Application No. Unknown
Information Disclosure Statement by Applicant (Use several sheets if necessary) (37 CFR §1.98(b))		Applicant Aristeidis Karalis et al.	
		Filing Date Herewith	Group Art Unit

U.S. Patent Documents

Examiner Initial	Desig. ID	Document Number	Publication Date	Patentee	Class	Subclass	Filing Date If Appropriate
	163	2009/0015075	1/15/2009	Cook et al.			
	164	2009/0015075	1/15/2009	Cook et al.			
	165	2009/0033564	2/5/2009	Cook et al.			
	166	2009/0045772	2/19/2009	Cook et al.			
	167	2009/0051224	2/26/2009	Cook et al.			
	168	2009/0058189	3/5/2009	Cook et al.			
	169	2009/0067198	3/12/2009	Graham et al.			
	170	2009/0072627	3/19/2009	Cook et al.			
	171	2009/0072628	3/19/2009	Cook et al.			
	172	2009/0072629	3/19/2009	Cook et al.			
	173	2009/0079268	3/26/2009	Cook et al.			
	174	2009/0085408	4/2/2009	Bruhn			
	175	2009/0085706	4/2/2009	Baarman et al.			
	176	2009/0096413	4/16/2009	Patovi et al.			
	177	2009/0102292	4/23/2009	Cook et al.			
	178	2009/0108679	4/30/2009	Porwal			
	179	2009/0108997	4/30/2009	Patterson et al.			
	180	2009/0127937	5/21/2009	Widmer et al.			
	181	2009/0134712	5/28/2009	Cook et al.			
	182	2009/0146892	6/11/2009	Shimizu et al.			
	183	2009/0153273	6/18/2009	Chen			
	184	2009/0160261	6/25/2009	Elo			
	185	2009/0167449	7/2/2009	Cook et al.			
	186	2009/0174263	7/9/2009	Baarman et al.			
	187	2009/0179502	7/16/2009	Cook et al.			
	188	2009/0189458	7/30/2009	Kawasaki			
	189	2009/0195332	8/6/2009	Joannopoulos et al.			

Examiner Signature	Date Considered
EXAMINER: Initials citation considered. Draw line through citation if not in conformance and not considered. Include copy of this form with next communication to applicant.	

Substitute Disclosure Form

Substitute Disclosure Form	U.S. Department of Commerce Patent and Trademark Office	Attorney Docket No. 01997-0358008	Application No. Unknown
Information Disclosure Statement by Applicant (Use several sheets if necessary) (37 CFR §1.98(b))		Applicant Aristeidis Karalis et al.	
		Filing Date Herewith	Group Art Unit

U.S. Patent Documents

Examiner Initial	Desig. ID	Document Number	Publication Date	Patentee	Class	Subclass	Filing Date If Appropriate
	190	2009/0195333	8/6/2009	Joannopoulos et al.			
	191	2009/0212636	8/27/2009	Cook et al.			
	192	2009/0213028	8/27/2009	Cook et al.			
	193	2009/0224608	9/10/2009	Cook et al.			
	194	2009/0224609	9/10/2009	Cook et al.			
	195	2009/0224856	9/10/2009	Karalis et al.			
	196	2009/0230777	9/17/2009	Baarman et al.			
	197	2009/0237194	9/24/2009	Waffenschmidt et al.			
	198	2009/0243394	10/1/2009	Levine			
	199	2009/0243397	10/1/2009	Cook et al.			
	200	2009/0251008	10/8/2009	Sugaya			
	201	2009/0267558	10/29/2009	Jung			
	202	2009/0267709	10/29/2009	Joannopoulos et al.			
	203	2009/0267710	10/29/2009	Joannopoulos et al.			
	204	2009/0271047	10/29/2009	Wakamatsu			
	205	2009/0271048	10/29/2009	Wakamatsu			
	206	2009/0273242	11/5/2009	Cook			
	207	2009/0281678	11/12/2009	Wakamatsu			
	208	2009/0284082	11/19/2009	Mohammadian			
	209	2009/0284083	11/19/2009	Karalis et al.			
	210	2009/0284218	11/19/2009	Mohammadian et al.			
	211	2009/0284220	11/19/2009	Toncich et al.			
	212	2009/0284227	11/19/2009	Mohammadian et al.			
	213	2009/0284245	11/19/2009	Kirby et al.			
	214	2009/0284369	11/19/2001	Toncich et al.			
	215	2009/0286470	11/19/2009	Mohammadian et al.			
	216	2009/0286475	11/19/2009	Toncich et al.			

Examiner Signature	Date Considered
EXAMINER: Initials citation considered. Draw line through citation if not in conformance and not considered. Include copy of this form with next communication to applicant.	

Substitute Disclosure Form

Substitute Disclosure Form	U.S. Department of Commerce Patent and Trademark Office	Attorney Docket No. 01997-0358008	Application No. Unknown
Information Disclosure Statement by Applicant (Use several sheets if necessary) (37 CFR §1.98(b))		Applicant Aristeidis Karalis et al.	
		Filing Date Herewith	Group Art Unit

U.S. Patent Documents

Examiner Initial	Desig. ID	Document Number	Publication Date	Patentee	Class	Subclass	Filing Date If Appropriate
	217	2009/0286476	11/19/2009	Toncich et al.			
	218	2009/0289595	11/26/2009	Chen et al.			
	219	2009/0299918	12/3/2009	Cook et al.			
	220	2010/0017249	1/21/2010	Fincham et al.			
	221	2010/0033021	2/11/2010	Bennett			
	222	2010/0034238	2/11/2010	Bennett			
	223	2010/0036773	2/11/2010	Bennett			
	224	2010/0038970	2/18/2010	Cook et al.			
	225	2010/0045114	2/25/2010	Sample et al.			
	226	2010/0052431	3/4/2010	Mita			
	227	2010/0052811	3/4/2010	Smith et al.			
	228	2010/0065352	3/18/2010	Ichikawa			
	229	2010/0066349	3/18/2010	Lin et al.			
	230	2010/0081379	4/1/2010	Cooper et al.			
	231	2010/0094381	4/15/2010	Kim et al.			
	232	2010/0096934	4/22/2010	Joannopoulos et al.			
	233	2010/0102639	4/29/2010	Joannopoulos et al.			
	234	2010/0102640	4/29/2010	Joannopoulos et al.			
	235	2010/0102641	4/29/2010	Joannopoulos et al.			
	236	2010/0109443	5/6/2010	Cook et al.			
	237	2010/0109604	5/6/2010	Boys et al.			
	238	2010/0115474	5/6/2010	Takada et al.			
	239	2010/0117454	5/13/2010	Cook et al.			
	240	2010/0117455	5/13/2010	Joannopoulos et al.			
	241	2010/0117456	5/13/2010	Karalis et al.			
	242	2010/0117596	5/13/2010	Cook et al.			
	243	2010/0123452	5/20/2010	Amano et al.			

Examiner Signature	Date Considered
EXAMINER: Initials citation considered. Draw line through citation if not in conformance and not considered. Include copy of this form with next communication to applicant.	

Substitute Disclosure Form

Substitute Disclosure Form	U.S. Department of Commerce Patent and Trademark Office	Attorney Docket No. 01997-0358008	Application No. Unknown
Information Disclosure Statement by Applicant (Use several sheets if necessary) (37 CFR §1.98(b))		Applicant Aristeidis Karalis et al.	
		Filing Date Herewith	Group Art Unit

U.S. Patent Documents

Examiner Initial	Desig. ID	Document Number	Publication Date	Patentee	Class	Subclass	Filing Date If Appropriate
	244	2010/0123353	5/20/2010	Joannopoulos et al.			
	245	2010/0123354	5/20/2010	Joannopoulos et al.			
	246	2010/0123355	5/20/2010	Joannopoulos et al.			
	247	2010/0123530	5/20/2010	Park et al.			
	248	2010/0127573	5/27/2010	Joannopoulos et al.			
	249	2010/0127574	5/27/2010	Joannopoulos et al.			
	250	2010/0127575	5/27/2010	Joannopoulos et al.			
	251	2010/0127660	5/27/2010	Cook et al.			
	252	2010/0133918	6/3/2010	Joannopoulos et al.			
	253	2010/0133919	6/3/2010	Joannopoulos et al.			
	254	2010/0133920	6/3/2010	Joannopoulos et al.			
	255	2010/0148589	6/17/2010	Hamam et al.			
	256	2010/0148723	6/17/2010	Cook et al.			
	257	2010/0151808	6/17/2010	Toncich et al.			
	258	2010/0156346	6/24/2010	Takada et al.			
	259	2010/0156570	6/24/2010	Hong et al.			
	260	2010/0164295	7/1/2010	Ichikawa et al.			
	261	2010/0171370	7/8/2010	Karalis et al.			
	262	2010/0181844	7/22/2010	Karalis et al.			
	263	2010/0181961	7/22/2010	Novak et al.			
	264	2010/0184371	7/22/2010	Cook et al.			
	265	2010/0187911	7/29/2010	Joannopoulos et al.			
	266	2010/0187913	7/29/2010	Sample			
	267	2010/0190435	7/29/2010	Cook et al.			
	268	2010/0190436	7/29/2010	Cook et al.			
	269	2010/0194206	8/5/2010	Burdo et al.			
	270	2010/0194207	8/5/2010	Graham			

Examiner Signature	Date Considered
EXAMINER: Initials citation considered. Draw line through citation if not in conformance and not considered. Include copy of this form with next communication to applicant.	

Substitute Disclosure Form

Substitute Disclosure Form	U.S. Department of Commerce Patent and Trademark Office	Attorney Docket No. 01997-0358008	Application No. Unknown
Information Disclosure Statement by Applicant (Use several sheets if necessary) (37 CFR §1.98(b))		Applicant Aristeidis Karalis et al.	
		Filing Date Herewith	Group Art Unit

U.S. Patent Documents

Examiner Initial	Desig. ID	Document Number	Publication Date	Patentee	Class	Subclass	Filing Date If Appropriate
	271	2010/0194334	8/5/2010	Kirby et al.			
	272	2010/0194335	8/5/2010	Kirby et al.			
	273	2010/0201189	8/12/2010	Kirby et al.			
	274	2010/0201201	8/12/2010	Mobarhan et al.			
	275	2010/0201202	8/12/2010	Kirby et al.			
	276	2010/0201204	8/12/2010	Sakoda et al.			
	277	2010/0201205	8/12/2010	Karalis et al.			
	278	2010/0201310	8/12/2010	Vorenkamp et al.			
	279	2010/0201313	8/12/2010	Vorenkamp et al.			
	280	2010/0201316	8/12/2010	Takada et al.			
	281	2010/0201513	8/12/2010	Vorenkamp et al.			
	282	2010/0207458	8/19/2010	Joannopoulos et al.			
	283	2010/0210233	8/19/2010	Cook et al.			
	284	2010/0213770	8/26/2010	Kikuchi			
	285	2010/0213895	8/26/2010	Keating et al.			
	286	2010/0217553	8/26/2010	Von Novak et al.			
	287	2010/0219695	9/2/2010	Komiyama et al.			
	288	2010/0219696	9/2/2010	Kojima			
	289	2010/0222010	9/2/2010	Ozaki et al.			
	290	2010/0225175	9/9/2010	Karalis et al.			
	291	2010/0225270	9/9/2010	Jacobs et al.			
	292	2010/0225271	9/9/2010	Oyobe et al.			
	293	2010/0225272	9/9/2010	Kirby et al.			
	294	2010/0231053	9/16/2010	Karalis et al.			
	295	2010/0231163	9/19/2010	Mashinsky			
	296	2010/0237706	9/23/2010	Karalis et al.			
	297	2010/0237707	9/23/2010	Karalis et al.			

Examiner Signature	Date Considered
EXAMINER: Initials citation considered. Draw line through citation if not in conformance and not considered. Include copy of this form with next communication to applicant.	

Substitute Disclosure Form

Substitute Disclosure Form	U.S. Department of Commerce Patent and Trademark Office	Attorney Docket No. 01997-0358008	Application No. Unknown
Information Disclosure Statement by Applicant (Use several sheets if necessary) (37 CFR §1.98(b))		Applicant Aristeidis Karalis et al.	
		Filing Date Herewith	Group Art Unit

U.S. Patent Documents

Examiner Initial	Desig. ID	Document Number	Publication Date	Patentee	Class	Subclass	Filing Date If Appropriate
	298	2010/0237708	9/23/2010	Karalis et al.			
	299	2010/0244576	9/30/2010	Hillan et al.			
	300	2010/0244577	9/30/2010	Shimokawa			
	301	2010/0244578	9/30/2010	Yoshikawa			
	302	2010/0244579	9/30/2010	Sogabe et al.			
	303	2010/0244580	9/30/2010	Uchida et al.			
	304	2010/0244581	9/30/2010	Uchida			
	305	2010/0244582	9/30/2010	Yoshikawa			
	306	2010/0244583	9/30/2010	Shimokawa			
	307	2010/0244839	9/30/2010	Yoshikawa			
	308	2010/0248622	9/30/2010	Kirby et al.			
	309	2010/0253152	10/7/2010	Karalis et al.			
	310	2010/0253281	10/7/2010	Li			
	311	2010/0256831	10/7/2010	Abramo et al.			
	312	2010/0259109	10/14/2010	Sato			
	313	2010/0264745	10/21/2010	Karalis et al.			
	314	2010/0264746	10/21/2010	Kazama et al.			
	315	2010/0276995	11/4/2010	Marzetta et al.			
	316	2010/0277003	11/4/2010	Von Novak et al.			
	317	2010/0277004	11/4/2010	Suzuki et al.			
	318	2010/0277005	11/4/2010	Karalis et al.			
	319	2010/0277120	11/4/2010	Cook et al.			
	320	2010/0289341	11/18/2010	Ozaki et al.			
	321	2010/0289449	11/18/2010	Elo			
	322	2010/0295505	11/25/2010	Jung et al.			
	323	2010/0295506	11/25/2010	Ichikawa			
	324	2010/0327660	12/30/2010	Karalis et al.			

Examiner Signature	Date Considered
EXAMINER: Initials citation considered. Draw line through citation if not in conformance and not considered. Include copy of this form with next communication to applicant.	

Substitute Disclosure Form

Substitute Disclosure Form	U.S. Department of Commerce Patent and Trademark Office	Attorney Docket No. 01997-0358008	Application No. Unknown
Information Disclosure Statement by Applicant (Use several sheets if necessary) (37 CFR §1.98(b))		Applicant Aristeidis Karalis et al.	
		Filing Date Herewith	Group Art Unit

U.S. Patent Documents

Examiner Initial	Desig. ID	Document Number	Publication Date	Patentee	Class	Subclass	Filing Date If Appropriate
	325	2010/0327661	12/30/2010	Karalis et al.			
	326	2011/0012431	1/20/2011	Karalis et al.			
	327	2011/0018361	1/27/2011	Karalis et al.			
	328	2011/0025131	2/3/2011	Karalis et al.			
	329	2011/0043046	2/24/2011	Joannopoulos et al.			
	330	2011/0049996	3/3/2011	Karalis et al.			
	331	2011/0049998	3/3/2011	Karalis et al.			
	332	2011/0074218	3/31/2011	Karalis et al.			
	333	2011/0074347	3/31/2011	Karalis et al.			
	334	2011/0089895	4/21/2011	Karalis et al.			
	335	2011/0140544	6/16/2011	Karalis et al.			
	336	2011/0148219	6/23/2011	Karalis et al.			
	337	2011/0162895	7/7/2011	Karalis et al.			
	338	2011/0169339	7/14/2011	Karalis et al.			
	339	2011/0181122	7/28/2011	Karalis et al.			
	340	2011/0193419	8/11/2011	Karalis et al.			
	341	2011/0198939	8/18/2011	Karalis et al.			
	342	2011/0221278	9/15/2011	Karalis et al.			
	343	2011/0227528	9/22/2011	Karalis et al.			
	344	2011/0227530	9/22/2011	Karalis et al.			
	345	2011/0241618	10/6/2011	Karalis et al.			
	346	2012/0068549	3/22/2012	Karalis et al.			

Foreign Patent Documents or Published Foreign Patent Applications

Examiner Initial	Desig. ID	Document Number	Publication Date	Country or Patent Office	Class	Subclass	Translation Yes	Translation No
	347	CA 142352	08/13/1912	Canada				
	348	DE 10 2005 036290	02/15/2007	Germany				

Examiner Signature	Date Considered
EXAMINER: Initials citation considered. Draw line through citation if not in conformance and not considered. Include copy of this form with next communication to applicant.	

Substitute Disclosure Form

Substitute Disclosure Form	U.S. Department of Commerce Patent and Trademark Office	Attorney Docket No. 01997-0358008	Application No. Unknown
Information Disclosure Statement by Applicant (Use several sheets if necessary) (37 CFR §1.98(b))		Applicant Aristeidis Karalis et al.	
		Filing Date Herewith	Group Art Unit

Foreign Patent Documents or Published Foreign Patent Applications

Examiner Initial	Desig. ID	Document Number	Publication Date	Country or Patent Office	Class	Subclass	Translation Yes	Translation No
	349	DE 38 24 972	01/12/1989	Germany				
	350	DE 100 29147	12/21/2001	Germany				
	351	DE 102006044057	4/10/2008	Germany				
	352	DE 102 21 484	11/27/2003	Germany				
	353	DE 103 04584	08/19/2004	Germany				
	354	DE 200 16 655	03/21/2002	Germany				
	355	EP 1,335,477	08/13/2003	Europe				
	356	JP 02-097005	04/09/1990	Japan				
	357	JP 6-341410	12/13/1994	Japan				
	358	JP 11-188113	07/13/1999	Japan				
	359	2006-074848	3/16/2006	Japan				
	360	10-2007-0017804	2/13/2007	Korea				
	361	WO 92/17929	10/15/1992	WIPO				
	362	WO 93/23908	11/25/1993	WIPO				
	363	WO 94/28560	12/08/1994	WIPO				
	364	WO 95/11545	04/27/1995	WIPO				
	365	WO 96/02970	02/01/1996	WIPO				
	366	WO 98/50993	11/12/1998	WIPO				
	367	WO 00/77910	12/21/2000	WIPO				
	368	WO 03/092329	11/6/2003	WIPO				
	369	WO 03/096361	11/20/2003	WIPO				
	370	WO 03/096512	11/20/2003	WIPO				
	371	WO 2004/038888	5/6/2004	WIPO				
	372	WO 2004/055654	7/1/2004	WIPO				
	373	WO 2004/073150	8/26/2004	WIPO				
	374	WO 2004/073166	8/26/2004	WIPO				
	375	WO 2004/073176	8/26/2004	WIPO				

Examiner Signature	Date Considered
EXAMINER: Initials citation considered. Draw line through citation if not in conformance and not considered. Include copy of this form with next communication to applicant.	

Substitute Disclosure Form

Substitute Disclosure Form	U.S. Department of Commerce Patent and Trademark Office	Attorney Docket No. 01997-0358008	Application No. Unknown
Information Disclosure Statement by Applicant (Use several sheets if necessary) (37 CFR §1.98(b))		Applicant Aristeidis Karalis et al.	
		Filing Date Herewith	Group Art Unit

Foreign Patent Documents or Published Foreign Patent Applications

Examiner Initial	Desig. ID	Document Number	Publication Date	Country or Patent Office	Class	Subclass	Translation Yes	Translation No
	376	WO 2004/073177	8/26/2004	WIPO				
	377	WO 2004/112216	12/23/2004	WIPO				
	378	WO 2005/024865	3/17/2005	WIPO				
	379	WO 2005/060068	6/30/2005	WIPO				
	380	WO 2005/109597	11/17/2005	WIPO				
	381	WO 2005/109598	11/17/2005	WIPO				
	382	WO 2006/011769	2/2/2006	WIPO				
	383	WO 2007/008646	01/18/2007	WIPO				
	384	WO 2007/084716	7/26/2007	WIPO				
	385	WO 2007/084717	7/26/2007	WIPO				
	386	WO 2007/020583	2/22/2007	WIPO				
	387	WO 2007/042952	4/19/2007	WIPO				
	388	WO 2008/109489	9/12/2008	WIPO				
	389	WO 2008/118178	10/02/2008	WIPO				
	390	WO 2009/009559	1/5/2009	WIPO				
	391	WO 2009/018568	2/5/2009	WIPO				
	392	WO 2009/023155	2/19/2009	WIPO				
	393	WO 2009/023646	2/19/2009	WIPO				
	394	WO 2009/033043	3/12/2009	WIPO				
	395	WO 2009/070730	6/4/2009	WIPO				
	396	WO 2009/126963	10/15/2009	WIPO				
	397	WO 2009/140506	11/19/2009	WIPO				
	398	WO 2009/149464	12/10/2009	WIPO				
	399	WO 2009/155000	12/23/2009	WIPO				
	400	WO 2010/030977	3/18/2010	WIPO				
	401	WO 2010/039967	4/8/2010	WIPO				
	402	WO 2010/090538	8/12/2010	WIPO				

Examiner Signature	Date Considered
EXAMINER: Initials citation considered. Draw line through citation if not in conformance and not considered. Include copy of this form with next communication to applicant.	

Substitute Disclosure Form

Substitute Disclosure Form	U.S. Department of Commerce Patent and Trademark Office	Attorney Docket No. 01997-0358008	Application No. Unknown
Information Disclosure Statement by Applicant (Use several sheets if necessary) (37 CFR §1.98(b))		Applicant Aristeidis Karalis et al.	
		Filing Date Herewith	Group Art Unit

Foreign Patent Documents or Published Foreign Patent Applications								
Examiner Initial	Desig. ID	Document Number	Publication Date	Country or Patent Office	Class	Subclass	Translation Yes	Translation No
	403	WO 2010/090539	9/12/2010	WIPO				
	404	WO 2011/062827	5/26/2011	WIPO				

Other Documents (include Author, Title, Date, and Place of Publication)		
Examiner Initial	Desig. ID	Document
	405	Abe et al. "A Noncontact Charger Using a Resonant Converter with Parallel Capacitor of the Secondary Coil". IEEE, 36(2):444-451, March/April 2000.
	406	Altchev et al. "Efficient Resonant Inductive Coupling Energy Transfer Using New Magnetic and Design Criteria". IEEE, pp. 1293-1298, 2005.
	407	T. Aoki et al. "Observation of strong coupling between one atom and a monolithic microresonator'. Nature 443:671-674 (2006).
	408	Apneseth et al. "Introducing wireless proximity switches" ABB Review 4/2002.
	409	Baker et al., "Feedback Analysis and Design of RF Power Links for Low-Power Bionic Systems," IEEE Transactions on Biomedical Circuits and Systems, 1(1):28-38 (March 2007)
	410	Balanis, C.A., "Antenna Theory: Analysis and Design," 3rd Edition, Sections 4.2, 4.3, 5.2, 5.3 (Wiley, New Jersey, 2005).
	411	Burri et al. "Invention Description" February 5, 2008
	412	Electricity Unplugged, Feature: Wireless Energy, Physics World, pp. 23-25 (February 2009)
	413	Esser et al. "A New Approach to Power Supplies for Robots". IEEE, 27(5):872-875, September/October 1991.
	414	Fenske et al. "Dielectric Materials at Microwave Frequencies". Applied Microwave & Wireless, pp. 92-100, (2000).
	415	C. Fernandez et al., "A simple dc-dc converter for the power supply of a cochlear implant", IEEE, pp. 1965-1970 (2003)
	416	D.H.Freedman. "Power on a Chip". MIT Technology Review, November 2004.
	417	Geyi, Wen. A Method for the Evaluation of Small Antenna Q. IEEE Transactions on Antennas and Propagation, Vol. 51, No. 8, August 2003.
	418	Haus, H.A., "Waves and Fields in Optoelectronics," Chapter 7 "Coupling of Modes --- Reasonators and Couplers" (Prentice-Hall, New Jersey, 1984).
	419	Heikkinen et al. "Performance and Efficiency of Planar Rectennas for Short-Range Wireless Power Transfer at 2.45 GHz". Microwave and Optical Technology Letters, 31(2):86-91, October 20, 2001.
	420	Hirai et al. "Integral Motor with Driver and Wireless Transmission of Power and Information for Autonomous Subspindle Drive". IEEE, 15(1):13-20, January 2000.
	421	Hirai et al. "Practical Study on Wireless Transmission of Power and Information for Autonomous Decentralized Manufacturing System". IEEE, 46(2):349-359, April 1999.
	422	Hirai et al. "Study on Intelligent Battery Charging Using Inductive Transmission of Power and Information". IEEE, 15(2):335-345, March 2000.

Examiner Signature	Date Considered
EXAMINER: Initials citation considered. Draw line through citation if not in conformance and not considered. Include copy of this form with next communication to applicant.	

Substitute Disclosure Form

Substitute Disclosure Form (37 CFR §1.98(b))	U.S. Department of Commerce Patent and Trademark Office	Attorney Docket No. 01997-0358008	Application No. Unknown
Information Disclosure Statement by Applicant (Use several sheets if necessary)		Applicant Aristeidis Karalis et al.	
		Filing Date Herewith	Group Art Unit

Other Documents (include Author, Title, Date, and Place of Publication)		
Examiner Initial	Desig. ID	Document
	423	Hirai et al. "Wireless Transmission of Power and Information and Information for Cableless Linear Motor Drive". IEEE 15(1):21-27, January 2000.
	424	"Intel CTO Says Gap between Humans, Machines Will Close by 2050", Intel News Release, (See intel.com/…/20080821comp.htm?iid=S…) (Printed 11/6/2009)
	425	M. V. Jacob et al. "Lithium Tantalate – A High Permittivity Dielectric Material for Microwave Communication Systems". Proceedings of IEEE TENCON – Poster Papers, pp. 1362-1366, (2003).
	426	Jackson, J.D., "Classical Electrodynamics," 3rd Edition, Sections 1.11, 5.5, 5.17, 6.9, 8.1, 8.8, 9.2, 9.3 (Wiley, New York, 1999).
	427	Aristeidis Karalis et al., "Efficient Wireless *non-radiative mid-range* energy transfer", Annals of Physics, Vol. 323, pp. 34-48 (2008)
	428	Kawamura et al. "Wireless Transmission of Power and Information Through One High-Frequency Resonant AC Link Inverter for Robot Manipulator Applications". IEEE, 32(3):503-508, May/June 1996.
	429	Yoshihiro Konishi, Microwave Electronic Circuit Technology, Chapter 4, pp. 145-197 (Marcel Dekker, Inc., New York, NY 1998)
	430	Andre Kurs et al., "Simultaneous mid-range power transfer to multiple devices", Applied Physics Letters, Vol. 96, No. 044102 (2010)
	431	Andre Kurs et al., "Wireless Power Transfer via Strongly Coupled Magnetic Resonances", Science Vol. 317, pp. 83-86 (July 6, 2007)
	432	Lee, "Antenna Circuit Design for RFID Applications," Microchip Technology Inc., AN710, 50 pages (2003)
	433	Lee, "RFID Coil Design," Microchip Technology Inc., AN678, 21 pages (1998)
	434	Liang et al., "Silicon waveguide two-photon absorption detector at 1.5 μm wavelength for autocorrelation measurements," Applied Physics Letters, 81(7):1323-1325 (August 12, 2002)
	435	A. Mediano et al. "Design of class E amplifier with nonlinear and linear shunt capacitances for any duty cycle", IEEE Trans. Microwave Theor. Tech., volume 55, no. 3, pp. 484-492, (2007)
	436	Microchip Technology Inc., "microID 13.56 MHz Design Guide - MCRF355/360 Reader Reference Design," 24 pages (2001)
	437	MIT Team Experimentally Demonstrates Wireless Power Transfer, Potentially Useful for Power Laptops, Cell-Phones Without Cords - Goodbye Wires …, by Franklin Hadley, Institute for Soldier Nanotechnologies, Massachusetts Institute of Technology (June 7, 2007)
	438	O'Brien et al. "Analysis of Wireless Power Supplies for Industrial Automation Systems". IEEE, pp. 367-372, (2003).
	439	O'Brien et al. "Design of Large Air-Gap Transformers for Wireless Power Supplies". IEEE, pp. 1557-1562, (2003).
	440	J. B. Pendry. "A Chiral Route to Negative Refraction". Science 306:1353-1355 (2004).
	441	Gary Peterson, "MIT WiTricity Not So Original After All", Feed Line No. 9, (See http://www.tfcbooks.com/articles/witricity.htm) printed 11/12/2009
	442	"Physics Update, Unwired Energy", Physics Today, pp. 26, (January 2007) (See http://arxiv.org/abs/physics/0611063.)
	443	Powercast LLC. "White Paper" Powercast simply wire free, (2003).

Examiner Signature	Date Considered
EXAMINER: Initials citation considered. Draw line through citation if not in conformance and not considered. Include copy of this form with next communication to applicant.	

Substitute Disclosure Form

Substitute Disclosure Form	U.S. Department of Commerce Patent and Trademark Office	Attorney Docket No. 01997-0358008	Application No. Unknown
Information Disclosure Statement by Applicant (Use several sheets if necessary) (37 CFR §1.98(b))		Applicant Aristeidis Karalis et al.	
		Filing Date Herewith	Group Art Unit

Other Documents (include Author, Title, Date, and Place of Publication)		
Examiner Initial	Desig. ID	Document
	444	Sakamoto et al. "A Novel Circuit for Non-Contact Charging Through Electro-Magnetic Coupling". IEEE, pp. 168-174, (1992).
	445	David Schneider, "A Critical Look at Wireless Power", IEEE Spectrum, (May 2010)
	446	John C. Schuder et al., "An Inductively Coupled RF System for the Transmission of 1 kW of Power Through the Skin", IEEE Transactions on Bio-Medical Engineering, Vol. BME-18, No. 4 (July 1971)
	447	J. C. Schuder et al., "Energy Transport Into the Closed Chest From a Set of Very-Large Mutually Orthogonal Coils", Communication Electronics, Vol. 64, pp. 527-534 (January 1963)
	448	John C. Schuder "Powering an Artificial Heart: Birth of the Inductively Coupled-Radio Frequency System in 1960", Artificial Organs, Vol. 26, No. 11, pp. 909-915 (2002)
	449	Sekitani et al. "A large-area flexible wireless power transmission sheet using printed plastic MEMS switches and organic field-effect transistors". [PUBLICATION UNKNOWN]
	450	Sekitani et al. "A large-area wireless power-transmission sheet using printed organic transistors and plastic MEMS switches" www.nature.com/naturematerials. Published online April 29, 2007.
	451	H. Sekiya et al. "FM/PWM control scheme in class DE inverter", IEEE Trans. Circuits Syst. I, vol. 51, no. 7 (July 2004)
	452	S. Sensiper. Electromagnetic wave propogation on helical conductors. PhD Thesis, Massachusetts Institute of Technology, (1951).
	453	Marin Soljacic, "Wireless nonradiative energy transfer", Visions of Discovery New Light on Physics, Cosmology, and Consciousness, Cambridge University Press, New York, NY pp. 530-542 (2011)
	454	Soljacic. "Wireless Non-Radiative Energy Transfer – PowerPoint presentation". Massachusetts Institute of Technology, October 6, 2005.
	455	Someya, Takao. "The world's first sheet-type wireless power transmission system". University of Tokyo, December 12, 2006
	456	Splashpower, "Splashpower - World Leaders in Wireless Power," PowerPoint presentation, 30 pages (September 3, 2007)
	457	David H. Staelin et al., Electromagnetic Waves, Chapters 2, 3, 4, and 8, pp. 46-176 and 336-405 (Prentice Hall Upper Saddle River, New Jersey 1998)
	458	Joseph C. Stark III, "Wireless Power Transmission Utilizing a Phased Array of Tesla Coils", Master Thesis, Massachusetts Institute of Technology (2004)
	459	Nikola Tesla, "High Frequency Oscillators for Electro-Therapeutic and Other Purposes", The Electrical Engineer, Vol. XXVI, No. 50 (November 17, 1898)
	460	Nikola Tesla, "High Frequency Oscillators for Electro-Therapeutic and Other Purposes", Proceedings of the IEEE, Vol. 87, No. 7, pp 1282-1292 (July 1999)
	461	Texas Instruments, "HF Antenna Design Notes - Technical Application Report," Literature Number 11-08-26-003, 47 pages (September 2003)
	462	"The Big Story for CES 2007: The public debut of eCoupled Intelligent Wireless Power" Press Release, Fulton Innovation LLC, Las Vegas, NV, December 27, 2006.
	463	"The world's first sheet-type wireless power transmission system: Will a socket be replaced by e-wall?" Press Release, Tokyo, Japan, December 12, 2006.
	464	Thomsen et al., "Ultrahigh speed all-optical demultiplexing based on two-photon absorption in a laser diode," Electronics Letters, 34(19):1871-1872 (September 17, 1998)

Examiner Signature	Date Considered

EXAMINER: Initials citation considered. Draw line through citation if not in conformance and not considered. Include copy of this form with next communication to applicant.

Substitute Disclosure Form

Substitute Disclosure Form	U.S. Department of Commerce Patent and Trademark Office	Attorney Docket No. 01997-0358008	Application No. Unknown
Information Disclosure Statement by Applicant (Use several sheets if necessary) (37 CFR §1.98(b))		Applicant Aristeidis Karalis et al.	
		Filing Date Herewith	Group Art Unit

Other Documents (include Author, Title, Date, and Place of Publication)		
Examiner Initial	Desig. ID	Document
	465	"Unwired energy questions asked, answered", Physics Today, pp. 16-17 (September 2007)
	466	UPM Rafsec, "Tutorial overview of inductively coupled RFID Systems," 7 pages (May 2003)
	467	Vandevoorde et al. "Wireless energy transfer for stand-alone systems: a comparison between low and high power applicability". Sensors and Actuators, A 92:305-311, 2001.
	468	David Vilkomerson et al., "Implantable Doppler System for Self-Monitoring Vascular Grafts", IEEE Ultrasonics Symposium, pp. 461-465 (2004)
	469	"Wireless Energy Transfer Can Potentially Recharge Laptops, Cell Phones Without Cords", by Marin Soljacic of Massachusetts Institute of Technology and Davide Castelvecchi of American Institute of Physics (November 14, 2006)
	470	Clemens M. Zierhofer et al., "High-Efficiency Coupling-Insensitive Transcutaneous Power and Data Transmission Via an Inductive Link", IEEE Transactions on Biomedical Engineering, Vol. 37, No. 7, pp. 716-722 (July 1990)
	471	Copy of Examination Report for Australia Application No. 2006269374, dated September 18, 2008
	472	Copy of International Search Report and Written Opinion for International Application No. PCT/US2006/026480, dated December 21, 2007
	473	Copy of International Preliminary Report on Patentability for International Application No. PCT/US2006/026480, dated January 29, 2008
	474	Copy of International Search Report and Written Opinion for International Application No. PCT/US2007/070892, dated March 3, 2008
	475	Copy of International Search Report and Written Opinion for International Application No. PCT/US09/43970, dated July 14, 2009
	476	Copy of International Search Report and Written Opinion of the International Searching Authority for International Application No. PCT/US2011/027868 by Examiner Blaine R. Copenheaver dated July 5, 2011
	477	European Examination Report dated January 15, 2009 in connection with Application No. 06 786 588.1 – 1242, Examined by Michael Lund.
	478	Copy of International Preliminary Report on Patentability with regard to International Application No. PCT/US2007/070892 by Examiner Philippe Becamel dated September 29, 2009
	479	"Recharging, The Wireless Way – Even physicists forget to recharge their cell phones sometimes." By Angela Chang – PC Magazine, ABC News Internet Ventures, (2006)
	480	"Physics Promises Wireless Power" by Jonathan Fildes, Science and Technology Reporter, BBC News, (November 15, 2006)
	481	"Wireless energy promise powers up" by Jonathan Fildes, Science and Technology Report, BBC News, (See http://news.bbc.co.uk/2/hi/technology/6725955.stm) (June 7, 2007)
	482	"The technology with impact 2007", by Jonathan Fildes, BBC News, (December 27, 2007)
	483	"In pictures: A year in technology", BBC News, (December 28, 2007)
	484	"Man tries wirelessly boosting batteries", by Seth Borenstein, AP Science Writer, Boston.com, (See http://www.boston.com/business/technology/articles/2006/11/15/man_tries_wirelessly_b...) (November 15, 2006)

Examiner Signature	Date Considered
EXAMINER: Initials citation considered. Draw line through citation if not in conformance and not considered. Include copy of this form with next communication to applicant.	

Substitute Disclosure Form

Substitute Disclosure Form (37 CFR §1.98(b))	U.S. Department of Commerce Patent and Trademark Office	Attorney Docket No. 01997-0358008	Application No. Unknown
Information Disclosure Statement by Applicant (Use several sheets if necessary)		Applicant Aristeidis Karalis et al.	
		Filing Date Herewith	Group Art Unit

Other Documents (include Author, Title, Date, and Place of Publication)		
Examiner Initial	Desig. ID	Document
	485	"The vision of an MIT physicist: Getting rid of pesky rechargers" by Gareth Cooks, Globe Staff, Boston.com, (December 11, 2006)
	486	"MIT discovery could unplug your iPod forever", by Chris Reidy, Globe staff, Boston.com, (See http://www.boston.com/business/ticker/2007/06/mit_discovery_c.html) (June 7, 2007)
	487	"Scientists light bulb with 'wireless electricity' ", www.Chinaview.cn, (See http://news.xinhuanet.com/english/2007-06/08/content_6215681.htm) (June, 2007)
	488	"Look, Ma – no wires! - Electricity broadcast through the air may someday run your home", by Gregory M. Lamb, Staff writer, The Christian Science Monitor, (See http://www.csmonitor.com/2006/1116/p14s01-stct.html) (November 15, 2006)
	489	"The end of the plug? Scientists invent wireless device that beams electricity through your home", by David Derbyshire, Daily Mail, (See http://www.dailymail.co.uk/pages/live/articles/technology/technology.html?in_article_id=4...) (June 7, 2007)
	490	"Lab report: Pull the plug for a positive charge", by James Morgan, The Herald, Web Issue 2680 (November 16, 2006)
	491	"Recharging gadgets without cables", Infotech Online, Printed from infotech.indiatimes.com (November 17, 2006)
	492	"Electro-nirvana? Not so fast", by Alan Boyle, MSNBC, (June 8, 2007)
	493	" 'Evanescent coupling' could power gadgets wirelessly" by Celeste Biever, NewScientistsTech.com, (see http://www.newscientisttech.com/article.ns?id=dn10575&print=true) (November 15, 2006)
	494	"Wireless Energy", by Clay Risen, The New York Times, (December 9, 2007)
	495	"Wireless power transfer possible", PressTV, (See http://www.presstv.ir/detail.aspx?id=12754&sectionid=3510208) (June 11, 2007)
	496	"Outlets Are Out", by Phil Berardelli, ScienceNOW Daily News, Science Now, (See http://sciencenow.sciencemag.org/cgi/content/full/2006/1114/2) (November 14, 2006)
	497	"The Power of Induction – Cutting the last cord could resonate with our increasingly gadget-dependent lives", by Davide Castelvecchi, Science News Online, Vol. 172, No. 3, (Week of July 21, 2007)
	498	"Wireless Energy Transfer May Power Devices at a Distance", ScientificAmerican.com, (November 14, 2006)
	499	"Wireless Energy Lights Bulb from Seven Feet Away -- Physicists vow to cut the cord between your laptop battery and the wall socket -- with just a simple loop of wire", by JR Minkel, ScientificAmerican.com, (See http://www.sciam.com/article.cfm?articleid=07511C52-E7F2-99DF-3FA6ED2D7DC9AA2...) (June 7, 2007)
	500	"Air Power – Wireless data connections are common -- now scientists are working on wireless power", by Stephen Cass, Sponsored by Spectrum, (See http://spectrum.ieee.org/computing/hardware/air-power) (November 2006)

Examiner Signature	Date Considered
EXAMINER: Initials citation considered. Draw line through citation if not in conformance and not considered. Include copy of this form with next communication to applicant.	

Substitute Disclosure Form

Substitute Disclosure Form	U.S. Department of Commerce Patent and Trademark Office	Attorney Docket No. 01997-0358008	Application No. Unknown
Information Disclosure Statement by Applicant (Use several sheets if necessary) (37 CFR §1.98(b))		Applicant Aristeidis Karalis et al.	
		Filing Date Herewith	Group Art Unit

Other Documents (include Author, Title, Date, and Place of Publication)		
Examiner Initial	Desig. ID	Document
	501	"Wireless revolution could spell end of plugs", by Roger Highfield, Science Editor, Telegraph.co.uk, (See http://www.telegraph.co.uk/news/main.jhtml?xml=/news/2007/06/07/nwireless107.xml) (June 7, 2007)
	502	"Man tries wirelessly boosting batteries", by Seth Borenstein, The Associated Press, USA Today, (November 16, 2006)
	503	"MIT's wireless electricity for mobile phones", by Miebi Senge, Vanguard, (See http://www.vanguardngr.com/articles/2002/features/gsm/gsm211062007.htm) (June 11, 2007)
	504	"MIT Scientists Pave the Way For Wireless Battery Charging", by William M. Bulkeley, The Wall Street Journal, (See http://online.wsj.com/article/SB118123955549228045.html?mod=googlenews_wsj) (June 8,2007)
	505	Copy of Provisional Application, Application Serial No. 60/908,383 filed on March 27, 2007
	506	"Intel Moves to Free Gadgets of Their Recharging Cords", By John Markoff, The New York Times - nytimes.com, August 21, 2008
	507	G. Scheible et al., "Novel Wireless Power Supply System for Wireless Communication Devices in Industrial Automation Systems", IEEE, (2002)
	508	J. Schutz et al., "Load Adaptive Medium Frequency Resonant Power Supply", IEEE, (2002)
	509	Marin Soljacic et al., "Photonic-crystal slow-light enhancement of nonlinear phase sensitivity", J. Opt. Soc. Am B, Vol. 19, No. 9, pp. 2052-2059 (September 2002)
	510	Amnon Yariv et al., "Coupled-resonator optical waveguide: a proposal and analysis", Optics Letters, Vol. 24, No. 11, pp. 711-713 (June 1, 1999)
	511	Copy of International Search Report for International Application No. PCT/US09/58499 by Examiner Lee W. Young dated December 10, 2009
	512	Copy of PCT International Search Report and Written Opinion for PCT/US09/59244, December 7, 2009, 12 pages.
	513	Copy of Non-Final Office Action for U.S. Application Serial No. 12/648,604 by Examiner Justen Fauth dated December 5, 2011
	514	Copy of Non-Final Office Action for U.S. Application Serial No. 13/036,177 by Examiner Fritz M. Fleming dated May 15, 2012
	515	Copy of Non-Final Office Action for U.S. Application Serial No. 13/078,511 by Examiner Fritz M. Fleming dated May 15, 2012
	516	Copy of Non-Final Office Action for U.S. Application Serial No. 12/726,742 by Examiner Fritz M. Fleming dated May 11, 2012
	517	Copy of Non-Final Office Action for U.S. Application Serial No. 13/030,395 by Examiner Fritz M. Fleming dated May 17, 2012
	518	Copy of Non-Final Office Action for U.S. Application Serial No. 13/040,810 by Examiner Fritz M. Fleming dated May 17, 2012
	519	Copy of Non-Final Office Action with regard to U.S. Application Serial No. 12/639,958 by Examiner Fritz M. Fleming dated August 16, 2012 (21 pages)

Examiner Signature	Date Considered
EXAMINER: Initials citation considered. Draw line through citation if not in conformance and not considered. Include copy of this form with next communication to applicant.	

Substitute Disclosure Form

Substitute Disclosure Form (37 CFR §1.98(b))	U.S. Department of Commerce Patent and Trademark Office	Attorney Docket No. 01997-0358008	Application No. Unknown
Information Disclosure Statement by Applicant (Use several sheets if necessary)		Applicant Aristeidis Karalis et al.	
		Filing Date Herewith	Group Art Unit

Other Documents (include Author, Title, Date, and Place of Publication)		
Examiner Initial	Desig. ID	Document
	520	Copy of Non-Final Office Action with regard to U.S. Application Serial No. 12/639,963 by Examiner Fritz M. Fleming dated August 31, 2012 (20 pages)
	521	Copy of Non-Final Office Action with regard to U.S. Application Serial No. 12/949,544 by Examiner Fritz M. Fleming dated September 5, 2012 (41 pages)
	522	Copy of Non-Final Office Action with regard to U.S. Application Serial No. 12/646,524 by Examiner Fritz M. Fleming dated October 1, 2012 (11 pages)
	523	Copy of Non-Final Office Action with regard to U.S. Application Serial No. 12/415,667 by Examiner Fritz M. Fleming dated October 5, 2012 (20 pages)
	524	Copy of Final Office Action with regard to U.S. Application Serial No. 12/639,967 by Examiner Fritz M. Fleming dated October 5, 2012 (21 pages)
	525	Copy of Final Office Action with regard to U.S. Application Serial No. 12/639,966 by Examiner Fritz M. Fleming dated October 9, 2012 (20 pages)
	526	Copy of Non-Final Office Action with regard to U.S. Application Serial No. 12/868,852 by Examiner Fritz M. Fleming dated October 10, 2012 (26 pages)
	527	Copy of Korean Office Action for Korean Application No. 10-2009-7022442 by the Examination Bureau of the Korean Intellectual Property Office dated October 18, 2012
	528	Copy of Korean Office Action for Korean Application No. 10-2011-7023643 by the Examination Bureau of the Korean Intellectual Property Office dated October 23, 2012
	529	Copy of Non-Final Office Action with regard to U.S. Application Serial No. 12/649,635 by Examiner Fritz M. Fleming dated December 21, 2012 (41 pages)
	530	Copy of Non-Final Office Action with regard to U.S. Application Serial No. 12/649,777 by Examiner Fritz M. Fleming dated December 24, 2012 (43 pages)
	531	Copy of Non-Final Office Action with regard to U.S. Application Serial No. 12/649,813 by Examiner Fritz M. Fleming dated December 21, 2012 (40 pages)
	532	Copy of Non-Final Office Action with regard to U.S. Application Serial No. 12/649,852 by Examiner Fritz M. Fleming dated December 21, 2012 (41 pages)
	533	Copy of Non-Final Office Action with regard to U.S. Application Serial No. 12/649,904 by Examiner Fritz M. Fleming dated December 28, 2012 (43 pages)
	534	"Automatic Recharging, From a Distance" by Anne Eisenberg, The New York Times, (see www.nytimes.com/2012/03/11/business/built-in-wireless-chargeing-for-electronic-devices.html?_r=0) (published on March 10, 2012)
	535	"How Wireless Charging Will Make Life Simpler (And Greener)" by David Ferris, Forbes (See forbes.com/sites/davidferris/2012/07/24/how-wireless-charging-will-make-life-simpler-and-greener/print/) (dated 7/24/2012)
	536	"Wireless charging – the future for electric cars?" by Katia Moskvitch, BBC News Technology (See www.bbc.co.uk/news/technology-14183409) (dated July 21, 2011)
	537	"Next Little Thing 2010 Electricity without wires", CNN Money (See money.cnn.com/galleries/2009/smallbusiness/0911/gallery.next_little_thing_2010.smb/) (dated November 30, 2009)

Examiner Signature	Date Considered
EXAMINER: Initials citation considered. Draw line through citation if not in conformance and not considered. Include copy of this form with next communication to applicant.	

Substitute Disclosure Form

SCORE Placeholder Sheet for IFW Content

Application Number: 13789860 Document Date: 03/08/2013

The presence of this form in the IFW record indicates that the following document type was received in electronic format on the date identified above. This content is stored in the SCORE database.

- Drawings – Other than Black and White Line Drawings

Since this was an electronic submission, there is no physical artifact folder, no artifact folder is recorded in PALM, and no paper documents or physical media exist. The TIFF images in the IFW record were created from the original documents that are stored in SCORE.

To access the documents in the SCORE database, refer to instructions developed by SIRA.

At the time of document entry (noted above):

- Examiners may access SCORE content via the eDAN interface.
- Other USPTO employees can bookmark the current SCORE URL (http://es/ScoreAccessWeb/).
- External customers may access SCORE content via the Public and Private PAIR interfaces.

Form Revision Date: February 8, 2006

PTO/SB/06 (09-11)
Approved for use through 1/31/2014. OMB 0651-0032
U.S. Patent and Trademark Office; U.S. DEPARTMENT OF COMMERCE
Under the Paperwork Reduction Act of 1995, no persons are required to respond to a collection of information unless it displays a valid OMB control number.

PATENT APPLICATION FEE DETERMINATION RECORD Substitute for Form PTO-875	Application or Docket Number 13/789,860	Filing Date 03/08/2013	☐ To be Mailed

ENTITY: ☒ LARGE ☐ SMALL ☐ MICRO

APPLICATION AS FILED – PART I

	(Column 1)	(Column 2)		
FOR	NUMBER FILED	NUMBER EXTRA	RATE ($)	FEE ($)
☐ BASIC FEE (37 CFR 1.16(a), (b), or (c))	N/A	N/A	N/A	
☐ SEARCH FEE (37 CFR 1.16(k), (i), or (m))	N/A	N/A	N/A	
☐ EXAMINATION FEE (37 CFR 1.16(o), (p), or (q))	N/A	N/A	N/A	
TOTAL CLAIMS (37 CFR 1.16(i))	minus 20 =	*	X $ =	
INDEPENDENT CLAIMS (37 CFR 1.16(h))	minus 3 =	*	X $ =	
☐ APPLICATION SIZE FEE (37 CFR 1.16(s))	If the specification and drawings exceed 100 sheets of paper, the application size fee due is $310 ($155 for small entity) for each additional 50 sheets or fraction thereof. See 35 U.S.C. 41(a)(1)(G) and 37 CFR 1.16(s).			
☐ MULTIPLE DEPENDENT CLAIM PRESENT (37 CFR 1.16(j))				
* If the difference in column 1 is less than zero, enter "0" in column 2.			TOTAL	

APPLICATION AS AMENDED – PART II

AMENDMENT	(Column 1)		(Column 2)	(Column 3)		
	CLAIMS REMAINING AFTER AMENDMENT		HIGHEST NUMBER PREVIOUSLY PAID FOR	PRESENT EXTRA	RATE ($)	ADDITIONAL FEE ($)
Total (37 CFR 1.16(i))	*	Minus	**	=	X $ =	
Independent (37 CFR 1.16(h))	*	Minus	***	=	X $ =	
☐ Application Size Fee (37 CFR 1.16(s))						
☐ FIRST PRESENTATION OF MULTIPLE DEPENDENT CLAIM (37 CFR 1.16(j))						
					TOTAL ADD'L FEE	

AMENDMENT	(Column 1)		(Column 2)	(Column 3)		
	CLAIMS REMAINING AFTER AMENDMENT		HIGHEST NUMBER PREVIOUSLY PAID FOR	PRESENT EXTRA	RATE ($)	ADDITIONAL FEE ($)
Total (37 CFR 1.16(i))	*	Minus	**	=	X $ =	
Independent (37 CFR 1.16(h))	*	Minus	***	=	X $ =	
☐ Application Size Fee (37 CFR 1.16(s))						
☐ FIRST PRESENTATION OF MULTIPLE DEPENDENT CLAIM (37 CFR 1.16(j))						
					TOTAL ADD'L FEE	

* If the entry in column 1 is less than the entry in column 2, write "0" in column 3.
** If the "Highest Number Previously Paid For" IN THIS SPACE is less than 20, enter "20".
*** If the "Highest Number Previously Paid For" IN THIS SPACE is less than 3, enter "3".
The "Highest Number Previously Paid For" (Total or Independent) is the highest number found in the appropriate box in column 1.

LIE
/CHARLENE HERBERT/

This collection of information is required by 37 CFR 1.16. The information is required to obtain or retain a benefit by the public which is to file (and by the USPTO to process) an application. Confidentiality is governed by 35 U.S.C. 122 and 37 CFR 1.14. This collection is estimated to take 12 minutes to complete, including gathering, preparing, and submitting the completed application form to the USPTO. Time will vary depending upon the individual case. Any comments on the amount of time you require to complete this form and/or suggestions for reducing this burden, should be sent to the Chief Information Officer, U.S. Patent and Trademark Office, U.S. Department of Commerce, P.O. Box 1450, Alexandria, VA 22313-1450. DO NOT SEND FEES OR COMPLETED FORMS TO THIS ADDRESS. **SEND TO: Commissioner for Patents, P.O. Box 1450, Alexandria, VA 22313-1450.**
If you need assistance in completing the form, call 1-800-PTO-9199 and select option 2.

FISH & RICHARDSON P.C.

Street Address
One Marina Park Drive
Boston, Massachusetts
02210-1878

Mail Address
P.O. Box 1022
MINNEAPOLIS, MINNESOTA
55440-1022

Telephone
617 542-5070

Facsimile
877 769-7945

WEB SITE
WWW.FR.COM

Frederick P. Fish
1855-1930

W.K. Richardson
1859-1951

March 8, 2013

Attorney Docket No.: 01997-0358008 / MIT Case No. 12525

Commissioner for Patents
P.O. Box 1450
Alexandria, VA 22313-1450

Presented for filing is a new continuation patent application of:

Inventor(s): ARISTEIDIS KARALIS, ANDRE B. KURS, ROBERT MOFFATT, JOHN D. JOANNOPOULOS, PETER H. FISHER AND MARIN SOLJACIC

Title: WIRELESS ENERGY TRANSFER

ATLANTA
AUSTIN
BOSTON
DALLAS
DELAWARE
HOUSTON
MUNICH
NEW YORK
SILICON VALLEY
SOUTHERN CALIFORNIA
TWIN CITIES
WASHINGTON, DC

Enclosed are the following papers, including those required to receive a filing date under 37 CFR §1.53(b):

	Pages
Specification	58
Claims	6
Abstract	1
Declaration	[To be Filed at a Later Date]
Drawing(s)	14

Enclosures:

— Power of Attorney, 9 pages.
— New disclosure information, including:
Information disclosure statement, 3 pages.
PTO-1449, 22 pages.
References, 537 items, 0 submitted.
— Application Data Sheet, 8 pages.

This application is a continuation (and claims the benefit of priority under 35 USC 120) to U.S. Application Serial No. 13/477,459, filed May 22, 2012, which is a continuation of U.S. Application Serial No. 13/036,177, filed February 28, 2011, which is a continuation of U.S. Application Serial No. 12/437,641, filed May 8, 2009, now U.S. Patent No. 8,097,983, which is a continuation of U.S. Application Serial No. 12/055,963 filed March 26, 2008, now U.S. Patent No. 7,825,543, which: 1) is a continuation-in-part of U.S. Utility Patent Application Serial No. 11/481,077, filed July 5, 2006, now U.S. Patent No. 7,741,734, which claims priority to U.S. Provisional Application Serial No. 60/698,442, filed July 12, 2005; (2) pursuant to

04/01/2013 VVAN11 00000016 061050 13789860
01 FC:1051 130.00 DA

U.S.C. § 119(e), claims priority to U.S. Provisional Application Serial No. 60/908,383, filed March 27, 2007, and U.S. Provisional Application Serial No. 60/908,666, filed March 28, 2007; and (3) pursuant to U.S.C. § 120, and U.S.C. § 363, is also a continuation-in-part of International Application No. PCT/US2007/070892, filed June 11, 2007. The prior applications are considered part of (and are incorporated by reference in) the disclosure of this application.

This application substantially copies certain claims from U.S. Patent No. 8,178,995 to Amano et al., which issued on May 15, 2012.

Please apply the filing fee and any other required fees or any credits to deposit account 06-1050, referencing the attorney docket number shown above.

If this application is found to be incomplete, or if a telephone conference would otherwise be helpful, please call the undersigned at (617) 542-5070.

Please direct all correspondence to the following:

26161
PTO Customer Number

Respectfully submitted,

/Marc M. Wefers Reg. No. 56,842/

Marc M. Wefers
Reg. No. 56,842
Enclosures
MZW/czc
22996383.doc

Electronic Acknowledgement Receipt

EFS ID:	15152770
Application Number:	13789860
International Application Number:	
Confirmation Number:	4131
Title of Invention:	WIRELESS ENERGY TRANSFER
First Named Inventor/Applicant Name:	Aristeidis Karalis
Customer Number:	26161
Filer:	Marc M. Wefers/Jodi Budge
Filer Authorized By:	Marc M. Wefers
Attorney Docket Number:	01997-0358008
Receipt Date:	08-MAR-2013
Filing Date:	
Time Stamp:	11:02:12
Application Type:	Utility under 35 USC 111(a)

Payment information:

Submitted with Payment	yes
Payment Type	Deposit Account
Payment was successfully received in RAM	$3010
RAM confirmation Number	26435
Deposit Account	061050
Authorized User	

File Listing:

Document Number	Document Description	File Name	File Size(Bytes)/ Message Digest	Multi Part /.zip	Pages (if appl.)

UNITED STATES PATENT AND TRADEMARK OFFICE

UNITED STATES DEPARTMENT OF COMMERCE
United States Patent and Trademark Office
Address: COMMISSIONER FOR PATENTS
P.O. Box 1450
Alexandria, Virginia 22313-1450
www.uspto.gov

APPLICATION NUMBER	FILING or 371(c) DATE	GRP ART UNIT	FIL FEE REC'D	ATTY.DOCKET.NO	TOT CLAIMS	IND CLAIMS
13/789,860	03/08/2013		3140	01997-0358008	18	10

CONFIRMATION NO. 4131

26161
FISH & RICHARDSON P.C. (BO)
P.O. BOX 1022
MINNEAPOLIS, MN 55440-1022

FILING RECEIPT

Date Mailed: 04/08/2013

Receipt is acknowledged of this non-provisional patent application. The application will be taken up for examination in due course. Applicant will be notified as to the results of the examination. Any correspondence concerning the application must include the following identification information: the U.S. APPLICATION NUMBER, FILING DATE, NAME OF APPLICANT, and TITLE OF INVENTION. Fees transmitted by check or draft are subject to collection. Please verify the accuracy of the data presented on this receipt. **If an error is noted on this Filing Receipt, please submit a written request for a Filing Receipt Correction. Please provide a copy of this Filing Receipt with the changes noted thereon. If you received a "Notice to File Missing Parts" for this application, please submit any corrections to this Filing Receipt with your reply to the Notice. When the USPTO processes the reply to the Notice, the USPTO will generate another Filing Receipt incorporating the requested corrections**

Inventor(s)

Aristeidis Karalis, Boston, MA;
Andre B. Kurs, Chestnut Hill, MA;
Robert Moffatt, Reston, VA;
John D. Joannopoulos, Belmont, MA;
Peter H. Fisher, Cambridge, MA;
Marin Soljacic, Belmont, MA;

Applicant(s)

Aristeidis Karalis, Boston, MA;
Andre B. Kurs, Chestnut Hill, MA;
Robert Moffatt, Reston, VA;
John D. Joannopoulos, Belmont, MA;
Peter H. Fisher, Cambridge, MA;
Marin Soljacic, Belmont, MA;

Power of Attorney: None

Domestic Priority data as claimed by applicant

This application is a CON of 13/477,459 05/22/2012
which is a CON of 13/036,177 02/28/2011 ABN
which is a CON of 12/437,641 05/08/2009 PAT 8097983 *
which is a CON of 12/055,963 03/26/2008 PAT 7825543 *
which is a CIP of 11/481,077 07/05/2006 PAT 7741734 *
which claims benefit of 60/698,442 07/12/2005
and said 12/055,963 03/26/2008
claims benefit of 60/908,383 03/27/2007
and claims benefit of 60/908,666 03/28/2007

and is a CIP of PCT/US2007/070892 06/11/2007
(*)Data provided by applicant is not consistent with PTO records.

Foreign Applications for which priority is claimed (You may be eligible to benefit from the **Patent Prosecution Highway** program at the USPTO. Please see http://www.uspto.gov for more information.) - None.
Foreign application information must be provided in an Application Data Sheet in order to constitute a claim to foreign priority. See 37 CFR 1.55 and 1.76.

Permission to Access - A proper **Authorization to Permit Access to Application by Participating Offices** (PTO/SB/39 or its equivalent) has been received by the USPTO.

If Required, Foreign Filing License Granted: 04/01/2013

The country code and number of your priority application, to be used for filing abroad under the Paris Convention, is **US 13/789,860**

Projected Publication Date: 07/18/2013

Non-Publication Request: No

Early Publication Request: No
Title

WIRELESS ENERGY TRANSFER

Preliminary Class

Statement under 37 CFR 1.55 or 1.78 for AIA (First Inventor to File) Transition Applications:

PROTECTING YOUR INVENTION OUTSIDE THE UNITED STATES

Since the rights granted by a U.S. patent extend only throughout the territory of the United States and have no effect in a foreign country, an inventor who wishes patent protection in another country must apply for a patent in a specific country or in regional patent offices. Applicants may wish to consider the filing of an international application under the Patent Cooperation Treaty (PCT). An international (PCT) application generally has the same effect as a regular national patent application in each PCT-member country. The PCT process **simplifies** the filing of patent applications on the same invention in member countries, but **does not result** in a grant of "an international patent" and does not eliminate the need of applicants to file additional documents and fees in countries where patent protection is desired.

Almost every country has its own patent law, and a person desiring a patent in a particular country must make an application for patent in that country in accordance with its particular laws. Since the laws of many countries differ in various respects from the patent law of the United States, applicants are advised to seek guidance from specific foreign countries to ensure that patent rights are not lost prematurely.

Applicants also are advised that in the case of inventions made in the United States, the Director of the USPTO must issue a license before applicants can apply for a patent in a foreign country. The filing of a U.S. patent application serves as a request for a foreign filing license. The application's filing receipt contains further information and guidance as to the status of applicant's license for foreign filing.

Applicants may wish to consult the USPTO booklet, "General Information Concerning Patents" (specifically, the section entitled "Treaties and Foreign Patents") for more information on timeframes and deadlines for filing foreign

patent applications. The guide is available either by contacting the USPTO Contact Center at 800-786-9199, or it can be viewed on the USPTO website at http://www.uspto.gov/web/offices/pac/doc/general/index.html.

For information on preventing theft of your intellectual property (patents, trademarks and copyrights), you may wish to consult the U.S. Government website, http://www.stopfakes.gov. Part of a Department of Commerce initiative, this website includes self-help "toolkits" giving innovators guidance on how to protect intellectual property in specific countries such as China, Korea and Mexico. For questions regarding patent enforcement issues, applicants may call the U.S. Government hotline at 1-866-999-HALT (1-866-999-4158).

LICENSE FOR FOREIGN FILING UNDER

Title 35, United States Code, Section 184

Title 37, Code of Federal Regulations, 5.11 & 5.15

GRANTED

The applicant has been granted a license under 35 U.S.C. 184, if the phrase "IF REQUIRED, FOREIGN FILING LICENSE GRANTED" followed by a date appears on this form. Such licenses are issued in all applications where the conditions for issuance of a license have been met, regardless of whether or not a license may be required as set forth in 37 CFR 5.15. The scope and limitations of this license are set forth in 37 CFR 5.15(a) unless an earlier license has been issued under 37 CFR 5.15(b). The license is subject to revocation upon written notification. The date indicated is the effective date of the license, unless an earlier license of similar scope has been granted under 37 CFR 5.13 or 5.14.

This license is to be retained by the licensee and may be used at any time on or after the effective date thereof unless it is revoked. This license is automatically transferred to any related applications(s) filed under 37 CFR 1.53(d). This license is not retroactive.

The grant of a license does not in any way lessen the responsibility of a licensee for the security of the subject matter as imposed by any Government contract or the provisions of existing laws relating to espionage and the national security or the export of technical data. Licensees should apprise themselves of current regulations especially with respect to certain countries, of other agencies, particularly the Office of Defense Trade Controls, Department of State (with respect to Arms, Munitions and Implements of War (22 CFR 121-128)); the Bureau of Industry and Security, Department of Commerce (15 CFR parts 730-774); the Office of Foreign AssetsControl, Department of Treasury (31 CFR Parts 500+) and the Department of Energy.

NOT GRANTED

No license under 35 U.S.C. 184 has been granted at this time, if the phrase "IF REQUIRED, FOREIGN FILING LICENSE GRANTED" DOES NOT appear on this form. Applicant may still petition for a license under 37 CFR 5.12, if a license is desired before the expiration of 6 months from the filing date of the application. If 6 months has lapsed from the filing date of this application and the licensee has not received any indication of a secrecy order under 35 U.S.C. 181, the licensee may foreign file the application pursuant to 37 CFR 5.15(b).

SelectUSA

The United States represents the largest, most dynamic marketplace in the world and is an unparalleled location for business investment, innovation, and commercialization of new technologies. The U.S. offers tremendous resources and advantages for those who invest and manufacture goods here. Through SelectUSA, our nation works to promote and facilitate business investment. SelectUSA provides information assistance to the international investor community; serves as an ombudsman for existing and potential investors; advocates on behalf of U.S. cities, states, and regions competing for global investment; and counsels U.S. economic development organizations on investment attraction best practices. To learn more about why the United States is the best country in the world to develop technology, manufacture products, deliver services, and grow your business, visit http://www.SelectUSA.gov or call +1-202-482-6800.

UNITED STATES PATENT AND TRADEMARK OFFICE

UNITED STATES DEPARTMENT OF COMMERCE
United States Patent and Trademark Office
Address: COMMISSIONER FOR PATENTS
P.O. Box 1450
Alexandria, Virginia 22313-1450
www.uspto.gov

APPLICATION NUMBER	FILING OR 371(C) DATE	FIRST NAMED APPLICANT	ATTY. DOCKET NO./TITLE
13/789,860	03/08/2013	Aristeidis Karalis	01997-0358008

CONFIRMATION NO. 4131

26161
FISH & RICHARDSON P.C. (BO)
P.O. BOX 1022
MINNEAPOLIS, MN 55440-1022

NOTICE

OC000000060174074

Date Mailed: 04/08/2013

INFORMATIONAL NOTICE TO APPLICANT

Applicant is notified that the above-identified application contains the deficiencies noted below. No period for reply is set forth in this notice for correction of these deficiencies. However, if a deficiency relates to the inventor's oath or declaration, the applicant must file an oath or declaration in compliance with 37 CFR 1.63, or a substitute statement in compliance with 37 CFR 1.64, executed by or with respect to each actual inventor no later than the expiration of the time period set in the "Notice of Allowability" to avoid abandonment. See 37 CFR 1.53(f).

The item(s) indicated below are also required and should be submitted with any reply to this notice to avoid further processing delays.

- A properly executed inventor's oath or declaration has not been received for the following inventor(s):
  All
  Applicant may submit the inventor's oath or declaration at any time before the Notice of Allowance and Fee(s) Due, PTOL-85, is mailed.

PATENT APPLICATION FEE DETERMINATION RECORD

Substitute for Form PTO-875

Application or Docket Number: 13/789,860

APPLICATION AS FILED - PART I

FOR	(Column 1) NUMBER FILED	(Column 2) NUMBER EXTRA	SMALL ENTITY RATE($)	SMALL ENTITY FEE($)	OR	OTHER THAN SMALL ENTITY RATE($)	OTHER THAN SMALL ENTITY FEE($)
BASIC FEE (37 CFR 1.16(a), (b), or (c))	N/A	N/A	N/A			N/A	280
SEARCH FEE (37 CFR 1.16(k), (i), or (m))	N/A	N/A	N/A			N/A	600
EXAMINATION FEE (37 CFR 1.16(o), (p), or (q))	N/A	N/A	N/A			N/A	720
TOTAL CLAIMS (37 CFR 1.16(i))	18 minus 20 =	*			OR	x 80 =	0.00
INDEPENDENT CLAIMS (37 CFR 1.16(h))	10 minus 3 =	* 7				x 420 =	2940
APPLICATION SIZE FEE (37 CFR 1.16(s))	If the specification and drawings exceed 100 sheets of paper, the application size fee due is $310 ($155 for small entity) for each additional 50 sheets or fraction thereof. See 35 U.S.C. 41(a)(1)(G) and 37 CFR 1.16(s).						0.00
MULTIPLE DEPENDENT CLAIM PRESENT (37 CFR 1.16(j))							0.00
* If the difference in column 1 is less than zero, enter "0" in column 2.			TOTAL			TOTAL	4540

APPLICATION AS AMENDED - PART II

		(Column 1) CLAIMS REMAINING AFTER AMENDMENT		(Column 2) HIGHEST NUMBER PREVIOUSLY PAID FOR	(Column 3) PRESENT EXTRA	SMALL ENTITY RATE($)	SMALL ENTITY ADDITIONAL FEE($)	OR	OTHER THAN SMALL ENTITY RATE($)	OTHER THAN SMALL ENTITY ADDITIONAL FEE($)
AMENDMENT A	Total (37 CFR 1.16(i))	*	Minus	**	=	x =		OR	x =	
	Independent (37 CFR 1.16(h))	*	Minus	***	=	x =		OR	x =	
	Application Size Fee (37 CFR 1.16(s))									
	FIRST PRESENTATION OF MULTIPLE DEPENDENT CLAIM (37 CFR 1.16(j))							OR		
						TOTAL ADD'L FEE		OR	TOTAL ADD'L FEE	

		(Column 1) CLAIMS REMAINING AFTER AMENDMENT		(Column 2) HIGHEST NUMBER PREVIOUSLY PAID FOR	(Column 3) PRESENT EXTRA	RATE($)	ADDITIONAL FEE($)	OR	RATE($)	ADDITIONAL FEE($)
AMENDMENT B	Total (37 CFR 1.16(i))	*	Minus	**	=	x =		OR	x =	
	Independent (37 CFR 1.16(h))	*	Minus	***	=	x =		OR	x =	
	Application Size Fee (37 CFR 1.16(s))									
	FIRST PRESENTATION OF MULTIPLE DEPENDENT CLAIM (37 CFR 1.16(j))							OR		
						TOTAL ADD'L FEE		OR	TOTAL ADD'L FEE	

* If the entry in column 1 is less than the entry in column 2, write "0" in column 3.
** If the "Highest Number Previously Paid For" IN THIS SPACE is less than 20, enter "20".
*** If the "Highest Number Previously Paid For" IN THIS SPACE is less than 3, enter "3".
The "Highest Number Previously Paid For" (Total or Independent) is the highest found in the appropriate box in column 1.

UNITED STATES PATENT AND TRADEMARK OFFICE

UNITED STATES DEPARTMENT OF COMMERCE
United States Patent and Trademark Office
Address: COMMISSIONER FOR PATENTS
P.O. Box 1450
Alexandria, Virginia 22313-1450
www.uspto.gov

APPLICATION NUMBER	FILING OR 371(C) DATE	FIRST NAMED APPLICANT	ATTY. DOCKET NO./TITLE
13/789,860	03/08/2013	Aristeidis Karalis	01997-0358008

CONFIRMATION NO. 4131

IMPROPER CPOA LETTER

26161
FISH & RICHARDSON P.C. (BO)
P.O. BOX 1022
MINNEAPOLIS, MN 55440-1022

Date Mailed: 04/08/2013

NOTICE REGARDING POWER OF ATTORNEY

This is in response to the power of attorney filed 03/08/2013. The power of attorney in this application is not accepted for the reason(s) listed below:

- The power of attorney has not been accepted because the party who is giving power of attorney has not been identified. power of attorney may only be signed by the applicant for patent (37 CFR 1.42) or the patent owner. A patent owner who was not the applicant must appoint any power of attorney in compliance with 37 CFR 3.71 and 3.73. See 37 CFR 1.32(b)(4).

/eruga/

Office of Data Management, Application Assistance Unit (571) 272-4000, or (571) 272-4200, or 1-888-786-0101

UNITED STATES PATENT AND TRADEMARK OFFICE

UNITED STATES DEPARTMENT OF COMMERCE
United States Patent and Trademark Office
Address: COMMISSIONER FOR PATENTS
P.O. Box 1450
Alexandria, Virginia 22313-1450
www.uspto.gov

APPLICATION NUMBER	FILING OR 371(C) DATE	FIRST NAMED APPLICANT	ATTY. DOCKET NO./TITLE
13/789,860	03/08/2013	Aristeidis Karalis	01997-0358008

CONFIRMATION NO. 4131

26161
FISH & RICHARDSON P.C. (BO)
P.O. BOX 1022
MINNEAPOLIS, MN 55440-1022

IMPROPER CFR REQUEST

OC000000060174432

Date Mailed: 04/08/2013

RESPONSE TO REQUEST FOR CORRECTED FILING RECEIPT

Power of Attorney, Claims, Fees, System Limitations, and Miscellaneous

In response to your request for a corrected Filing Receipt, the Office is unable to comply with your request because:

- Any request to correct or update the name of the applicant must include an application data sheet (ADS) in compliance with 37 CFR 1.76 specifying the correct or updated name of the applicant in the applicant information section. Any request to change the applicant after an original applicant has been specified under 37 CFR 1.46(b) must include a new ADS in compliance with 37 CFR 1.76 specifying the applicant in the applicant information section and comply with 37 CFR 3.71 and 3.73. See 37 CFR 1.46(c).

/eruga/

Office of Data Management, Application Assistance Unit (571) 272-4000, or (571) 272-4200, or 1-888-786-0101

IN THE UNITED STATES PATENT AND TRADEMARK OFFICE

Applicant	: Peter H. Fisher et al.	Art Unit	: Unknown
Serial No.	: 12/055,963	Examiner	: Unknown
Filed	: March 26, 2008	Conf. No.	: 8709
Title	: WIRELESS ENERGY TRANSFER		

Commissioner for Patents
P.O. Box 1450
Alexandria, VA 22313-1450

POWER OF ATTORNEY BY ASSIGNEE; ELECTION OF ASSIGNEE TO CONDUCT PROSECUTION TO EXCLUSION OF INVENTORS; CERTIFICATE UNDER 37 CFR §3.73(B)

The undersigned, as authorized representative of the assignee of the entire right, title and interest in the above-identified application, hereby appoints

Timothy A. French, Reg. No. 30,175	Marc M. Wefers, Reg. No. 56,842
Lee Crews, Ph.D., Reg. No. 43,567	Faustino A. Lichauco, Reg. No. 41,942
John F. Hayden, Reg. No. 37,640	Elliott J. Mason, III, Reg. No. 56,569

as its attorney to prosecute the application and to transact all business in the Patent and Trademark Office connected therewith with full powers of substitution and revocation, said appointment to be to the exclusion of the inventors and their attorney(s) in accordance with the provisions of 37 CFR §3.71 *et seq.* of the Patent Office Rules of Practice.

Ownership is in the assignee by virtue of the assignment document, a copy of which is attached hereto. The documents evidencing ownership have been reviewed and to the best of the assignee's knowledge and belief, title is in the assignee.

Please direct all communications regarding the application to **Customer Number 26161**.

Signature: _____ Date: MARCH 31, 2008

Typed name: DANIEL O'BRIEN

Title: INTELLECTUAL PROPERTY MANAGER
TECHNOLOGY LICENSING OFFICE

Assignee: Massachusetts Institute of Technology

MZW/czc

Fish & Richardson P.C.
Telephone: (617) 542-5070
Facsimile: (617) 542-8906

21887354.doc

ASSIGNMENT

For valuable consideration, we, Aristeidis Karalis, of 70 Pacific Street, Apt. 907, Cambridge, MA 02139; Andre B. Kurs, of 647 Cambridge Street, Apt. 2, Cambridge, MA 02141; Robert Moffatt, of 2205 Stirrup Iron Lane, Reston, VA 20191; John D. Joannopoulos, of 64 Douglas Road, Belmont, MA 02478; Peter H. Fisher, of 13 Cornelius Way, Cambridge, MA 02141; Marin Soljacic, of 44 Westlund Road, Belmont, MA 02478; hereby assign to MASSACHUSETTS INSTITUTE OF TECHNOLOGY, a corporation of Massachusetts, having a place of business at 77 Massachusetts Avenue, Cambridge, Massachusetts 02142-1324, and its successors and assigns (collectively hereinafter called "the Assignee"), the entire right, title and interest throughout the world in the inventions and improvements which are subject of an application for United States Patent signed by us, entitled WIRELESS ENERGY TRANSFER, filed March 26, 2008 , and assigned U.S. Serial Number 12/055,963 , this assignment including said application, any and all United States and foreign patents, utility models, and design registrations granted for any of said inventions or improvements, and the right to claim priority based on the filing date of said application under the International Convention for the Protection of Industrial Property, the Patent Cooperation Treaty, the European Patent Convention, and all other treaties of like purposes; and we authorize the Assignee to apply in all countries in our name or in its own name for patents, utility models, design registrations and like rights of exclusion and for inventors' certificates for said inventions and improvements; and we agree for ourselves and our respective heirs, legal representatives and assigns, without further compensation to perform such lawful acts and to sign such further applications, assignments, Preliminary Statements and other lawful documents as the Assignee may reasonably request to effectuate fully this assignment.

DATE: May 22, 2008

ARISTEIDIS KARALIS

STATE OF Massachusetts)
) SS.
COUNTY OF Middlesex)

On May 22, 2008, before me, the undersigned, a notary public for the State of Massachusetts, there personally appeared ARISTEIDIS KARALIS personally known to me (or proved to me on the basis of satisfactory evidence) to be the person whose name is subscribed to this Assignment, who acknowledged having executed the same in his authorized capacity and that by his signature on this Assignment, the person or the entity upon behalf of which he acted, executed this Assignment.

WITNESS my hand and official seal.

Notary Public

CATHERINE M. SULLIVAN
Notary Public
Commonwealth of Massachusetts
My Commission Expires Mar 6, 2009

DATE: 05/27/2008

ANDRE B. KURS

STATE OF MASSACHUSETTS)
) SS.
COUNTY OF MIDDLESEX)

On May 27, 2008, before me, the undersigned, a notary public for the State of Massachusetts, there personally appeared ANDRE B. KURS personally known to me (or proved to me on the basis of satisfactory evidence) to be the person whose name is subscribed to this Assignment, who acknowledged having executed the same in his authorized capacity and that by his signature on this Assignment, the person or the entity upon behalf of which he acted, executed this Assignment.

WITNESS my hand and official seal.

Notary Public

CATHERINE M. SULLIVAN
Notary Public
Commonwealth of Massachusetts
My Commission Expires Mar 6, 2009

DATE: May 21, 2008 Robert A. Moffatt
ROBERT MOFFATT

STATE OF Massachusetts)
) SS.
COUNTY OF Middlesex)

Massachusetts ~~Virginia~~, On May 21, 2008, before me, the undersigned, a notary public for the State of ~~Virginia~~, there personally appeared ROBERT MOFFATT personally known to me (or proved to me on the basis of satisfactory evidence) to be the person whose name is subscribed to this Assignment, who acknowledged having executed the same in his authorized capacity and that by his signature on this Assignment, the person or the entity upon behalf of which he acted, executed this Assignment.

WITNESS my hand and official seal.

Margaret Anne Udden
Notary Public

MARGARET ANNE UDDEN
Notary Public
Commonwealth of Massachusetts
My Commission Expires
March 26, 2015

DATE: May 17 2008

JOHN D. JOANNOPOULOS

STATE OF Massachusetts)
) SS.
COUNTY OF Middlesex)

On May 19, 2008, before me, the undersigned, a notary public for the State of Massachusetts, there personally appeared JOHN D. JOANNOPOULOS personally known to me (or proved to me on the basis of satisfactory evidence) to be the person whose name is subscribed to this Assignment, who acknowledged having executed the same in his authorized capacity and that by his signature on this Assignment, the person or the entity upon behalf of which he acted, executed this Assignment.

WITNESS my hand and official seal.

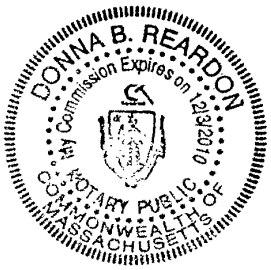

Donna B Reardon
Notary Public

DATE: May 28, 2008

PETER H. FISHER

STATE OF MA)
) SS.
COUNTY OF Middlesex)

On 5/28/2008, before me, the undersigned, a notary public for the State of Massachusetts, there personally appeared PETER H. FISHER personally known to me (or proved to me on the basis of satisfactory evidence) to be the person whose name is subscribed to this Assignment, who acknowledged having executed the same in his authorized capacity and that by his signature on this Assignment, the person or the entity upon behalf of which he acted, executed this Assignment.

WITNESS my hand and official seal.

Notary Public

HILARY W HOYT
MY COMM. EXPIRES SEPT. 6, 2013
COMMONWEALTH OF MASSACHUSETTS
NOTARY PUBLIC

DATE: 20 MAY 2008

MARIN SOLJACIC

STATE OF MA)
) SS.
COUNTY OF Middlesex)

On 5/20/08, before me, the undersigned, a notary public for the State of Massachusetts, there personally appeared MARIN SOLJACIC personally known to me (or proved to me on the basis of satisfactory evidence) to be the person whose name is subscribed to this Assignment, who acknowledged having executed the same in his authorized capacity and that by his signature on this Assignment, the person or the entity upon behalf of which he acted, executed this Assignment.

WITNESS my hand and official seal.

HILARY W HOYT
MY COMM. EXPIRES
SEPT. 6, 2013
COMMONWEALTH OF MASSACHUSETTS
NOTARY PUBLIC

Notary Public

assignment-notary (with ca).doc

Electronic Acknowledgement Receipt

EFS ID:	15490720
Application Number:	13789860
International Application Number:	
Confirmation Number:	4131
Title of Invention:	WIRELESS ENERGY TRANSFER
First Named Inventor/Applicant Name:	Aristeidis Karalis
Customer Number:	26161
Filer:	Marc M. Wefers/Cheryl Forrest
Filer Authorized By:	Marc M. Wefers
Attorney Docket Number:	01997-0358008
Receipt Date:	11-APR-2013
Filing Date:	08-MAR-2013
Time Stamp:	12:32:17
Application Type:	Utility under 35 USC 111(a)

Payment information:

Submitted with Payment	no

File Listing:

Document Number	Document Description	File Name	File Size(Bytes)/ Message Digest	Multi Part /.zip	Pages (if appl.)
1	Application Data Sheet	ADS.pdf	747203 c54944c0a9d5d7bcb5817111340c0a6ed45e921a	no	10

Warnings:	
Information:	

This is not an USPTO supplied ADS fillable form					
2	Power of Attorney	POA.pdf	246358 64220341ceba4ab5f976f87bad759613dc2aeaa6	no	9
Warnings:					
Information:					
			Total Files Size (in bytes):	993561	

This Acknowledgement Receipt evidences receipt on the noted date by the USPTO of the indicated documents, characterized by the applicant, and including page counts, where applicable. It serves as evidence of receipt similar to a Post Card, as described in MPEP 503.

New Applications Under 35 U.S.C. 111
If a new application is being filed and the application includes the necessary components for a filing date (see 37 CFR 1.53(b)-(d) and MPEP 506), a Filing Receipt (37 CFR 1.54) will be issued in due course and the date shown on this Acknowledgement Receipt will establish the filing date of the application.

National Stage of an International Application under 35 U.S.C. 371
If a timely submission to enter the national stage of an international application is compliant with the conditions of 35 U.S.C. 371 and other applicable requirements a Form PCT/DO/EO/903 indicating acceptance of the application as a national stage submission under 35 U.S.C. 371 will be issued in addition to the Filing Receipt, in due course.

New International Application Filed with the USPTO as a Receiving Office
If a new international application is being filed and the international application includes the necessary components for an international filing date (see PCT Article 11 and MPEP 1810), a Notification of the International Application Number and of the International Filing Date (Form PCT/RO/105) will be issued in due course, subject to prescriptions concerning national security, and the date shown on this Acknowledgement Receipt will establish the international filing date of the application.

Application Data Sheet 37 CFR 1.76	Attorney Docket Number	01997-0358008
	Application Number	13/789,860
Title of Invention	WIRELESS ENERGY TRANSFER	

The application data sheet is part of the provisional or nonprovisional application for which it is being submitted. The following form contains the bibliographic data arranged in a format specified by the United States Patent and Trademark Office as outlined in 37 CFR 1.76.

Secrecy Order 37 CFR 5.2

☐ Portions or all of the application associated with this Application Data Sheet may fall under a Secrecy Order pursuant to 37 CFR 5.2 (Paper filers only. Applications that fall under Secrecy Order may not be filed electronically.)

Inventor Information:

Inventor 1.

Prefix	Given Name	Middle Name	Family Name	Suffix
	Aristeidis		Karalis	

Residence Information (Select One) ☒ US Residency ☐ Non US Residency ☐ Active US Military Service

City	Boston	State/Province	MA	Country of Residence	US

Mailing Address of Inventor:

Address 1	151 Tremont Street, Apt. 21F		
Address 2			
City	Boston	State/Province	MA
Postal Code	02111	Country	US

Inventor 2.

Prefix	Given Name	Middle Name	Family Name	Suffix
	Andre	B.	Kurs	

Residence Information (Select One) ☒ US Residency ☐ Non US Residency ☐ Active US Military Service

City	Chestnut Hill	State/Province	MA	Country of Residence	US

Mailing Address of Inventor:

Application Data Sheet 37 CFR 1.76	Attorney Docket Number	01997-0358008
	Application Number	13/789,860
Title of Invention	WIRELESS ENERGY TRANSFER	

Address 1	250 Hammond Pond Parkway, Apt. 1203S		
Address 2			
City	Chestnut Hill	**State/Province**	MA
Postal Code	02467	**Country**	US

Inventor 3.

Prefix	Given Name	Middle Name	Family Name	Suffix
	Robert		Moffatt	

Residence Information (Select One) ☒ US Residency ☐ Non US Residency ☐ Active US Military Service

City	Reston	**State/Province**	VA	**Country of Residence**	US

Mailing Address of Inventor:

Address 1	2205 Stirrup Iron Lane		
Address 2			
City	Reston	**State/Province**	VA
Postal Code	20191	**Country**	US

Inventor 4.

Prefix	Given Name	Middle Name	Family Name	Suffix
	John	D.	Joannopoulos	

Residence Information (Select One) ☒ US Residency ☐ Non US Residency ☐ Active US Military Service

City	Belmont	**State/Province**	MA	**Country of Residence**	US

Application Data Sheet 37 CFR 1.76	Attorney Docket Number	01997-0358008
	Application Number	13/789,860
Title of Invention	WIRELESS ENERGY TRANSFER	

Mailing Address of Inventor:			
Address 1	64 Douglas Road		
Address 2			
City	Belmont	**State/Province**	MA
Postal Code	02478	**Country**	US

Inventor 5.				
Prefix	**Given Name**	**Middle Name**	**Family Name**	**Suffix**
	Peter	H.	Fisher	

Residence Information (Select One) ☒ US Residency ☐ Non US Residency ☐ Active US Military Service

City	Cambridge	**State/Province**	MA	**Country of Residence**	US

Mailing Address of Inventor:			
Address 1	13 Cornelius Way		
Address 2			
City	Cambridge	**State/Province**	MA
Postal Code	02141	**Country**	US

Inventor 6.				
Prefix	**Given Name**	**Middle Name**	**Family Name**	**Suffix**
	Marin		Soljacic	

Residence Information (Select One) ☒ US Residency ☐ Non US Residency ☐ Active US Military Service

Application Data Sheet 37 CFR 1.76	Attorney Docket Number	01997-0358008
	Application Number	13/789,860
Title of Invention	WIRELESS ENERGY TRANSFER	

City	Belmont	State/Province	MA	Country of Residence	US
Mailing Address of Inventor:					
Address 1	44 Westlund Road				
Address 2					
City	Belmont	**State/Province**	MA		
Postal Code	02478	**Country**	US		

Correspondence Information:

Enter either Customer Number or complete the Correspondence Information section below. For further information see 37 CFR 1.33(a).	
Customer Number	26161
Email Address	

Application Information:

Title of the Invention	WIRELESS ENERGY TRANSFER		
Attorney Docket Number	01997-0358008	**Small Entity Status Claimed** ☐	
Application Type	Utility		
Subject Matter	Utility		
Total Number of Drawing Sheets (if any)	14	**Suggested Figure for Publication (if any)**	

Publication Information:

☐	Request Early Publication (Fee required at time of Request 37 CFR 1.219)
☐	**Request Not to Publish.** I hereby request that the attached application not be published under 35 U.S.C. 122(b) and certify that the invention disclosed in the attached application has not been and will not be the subject of an application filed in another country, or under a multilateral agreement, that requires publication at eighteen months after filing.

Application Data Sheet 37 CFR 1.76	Attorney Docket Number	01997-0358008
	Application Number	13/789,860
Title of Invention	WIRELESS ENERGY TRANSFER	

Representative Information:

Representative information should be provided for all practitioners having a power of attorney in the application. Providing this information in the Application Data Sheet does not constitute a power of attorney in the application (see 37 CFR 1.32). Enter either Customer Number or complete the Representative Name section below. If both sections are completed the Customer Number will be used for the Representative Information during processing.

Please Select One:	☒ Customer Number	☐ U.S. Patent Practitioner	☐ Limited Recognition (37 CFR 11.9)
Customer Number	26161		

Domestic Benefit/National Stage Information:

This section allows for the applicant to either claim benefit under 35 U.S.C. 119(e), 120, 121, or 365(c) or indicate National Stage entry from a PCT application. Providing this information in the application data sheet constitutes the specific reference required by 35 U.S.C. 119(e) or 120, and 37 CFR 1.78.

Prior Application Status	Pending		
Application Number	Continuity Type	Prior Application Number	Filing Date (YYYY-MM-DD)
13789860	Continuation of	13477459	2012-05-22

This section allows for the applicant to either claim benefit under 35 U.S.C. 119(e), 120, 121, or 365(c) or indicate National Stage entry from a PCT application. Providing this information in the application data sheet constitutes the specific reference required by 35 U.S.C. 119(e) or 120, and 37 CFR 1.78.

Prior Application Status	Pending		
Application Number	Continuity Type	Prior Application Number	Filing Date (YYYY-MM-DD)
13477459	Continuation of	13036177	2011-02-28

This section allows for the applicant to either claim benefit under 35 U.S.C. 119(e), 120, 121, or 365(c) or indicate National Stage entry from a PCT application. Providing this information in the application data sheet constitutes the specific reference required by 35 U.S.C. 119(e) or 120, and 37 CFR 1.78.

Prior Application Status	Patented		
Application Number	Continuity Type	Prior Application Number	Filing Date (YYYY-MM-DD)
13036177	Continuation of	12437641	2009-05-08

This section allows for the applicant to either claim benefit under 35 U.S.C. 119(e), 120, 121, or 365(c) or indicate National Stage entry from a PCT application. Providing this information in the application data sheet constitutes the specific reference required by 35 U.S.C. 119(e) or 120, and 37 CFR 1.78.

Prior Application Status	Patented		
Application Number	Continuity Type	Prior Application Number	Filing Date (YYYY-MM-DD)
12437641	Continuation of	12055963	2008-03-26

Application Data Sheet 37 CFR 1.76	Attorney Docket Number	01997-0358008
	Application Number	13/789,860
Title of Invention	WIRELESS ENERGY TRANSFER	

This section allows for the applicant to either claim benefit under 35 U.S.C. 119(e), 120, 121, or 365(c) or indicate National Stage entry from a PCT application. Providing this information in the application data sheet constitutes the specific reference required by 35 U.S.C. 119(e) or 120, and 37 CFR 1.78.

Prior Application Status	Patented		
Application Number	Continuity Type	Prior Application Number	Filing Date (YYYY-MM-DD)
12055963	Continuation in part of	11481077	2006-07-05

This section allows for the applicant to either claim benefit under 35 U.S.C. 119(e), 120, 121, or 365(c) or indicate National Stage entry from a PCT application. Providing this information in the application data sheet constitutes the specific reference required by 35 U.S.C. 119(e) or 120, and 37 CFR 1.78.

Prior Application Status	Expired		
Application Number	Continuity Type	Prior Application Number	Filing Date (YYYY-MM-DD)
11481077	Non provisional of	60698442	2005-07-12

This section allows for the applicant to either claim benefit under 35 U.S.C. 119(e), 120, 121, or 365(c) or indicate National Stage entry from a PCT application. Providing this information in the application data sheet constitutes the specific reference required by 35 U.S.C. 119(e) or 120, and 37 CFR 1.78.

Prior Application Status	Expired		
Application Number	Continuity Type	Prior Application Number	Filing Date (YYYY-MM-DD)
12055963	Non provisional of	60908383	2007-03-27

This section allows for the applicant to either claim benefit under 35 U.S.C. 119(e), 120, 121, or 365(c) or indicate National Stage entry from a PCT application. Providing this information in the application data sheet constitutes the specific reference required by 35 U.S.C. 119(e) or 120, and 37 CFR 1.78.

Prior Application Status	Expired		
Application Number	Continuity Type	Prior Application Number	Filing Date (YYYY-MM-DD)
12055963	Non provisional of	60908666	2007-03-28

This section allows for the applicant to either claim benefit under 35 U.S.C. 119(e), 120, 121, or 365(c) or indicate National Stage entry from a PCT application. Providing this information in the application data sheet constitutes the specific reference required by 35 U.S.C. 119(e) or 120, and 37 CFR 1.78.

Prior Application Status	Pending	

Application Data Sheet 37 CFR 1.76	Attorney Docket Number	01997-0358008
	Application Number	13/789,860
Title of Invention	WIRELESS ENERGY TRANSFER	

Application Number	Continuity Type	Prior Application Number	Filing Date (YYYY-MM-DD)
12055963	Continuation in part of	PCTUS2007070892	2007-06-11

Foreign Priority Information:

This section allows for the applicant to claim priority to a foreign application. Providing this information in the application data sheet constitutes the claim for priority as required by 35 U.S.C. 119(b) and 37 CFR 1.55(d). When priority is claimed to a foreign application that is eligible for retrieval under the priority document exchange program (PDX) the information will be used by the Office to automatically attempt retrieval pursuant to 37 CFR 1.55(h)(1) and (2). Under the PDX program, applicant bears the ultimate responsibility for ensuring that a copy of the foreign application is received by the Office from the participating foreign intellectual property office, or a certified copy of the foreign priority application is filed, within the time period specified in 37 CFR 1.55(g)(1).

Application Number	Country	Filing Date (YYYY-MM-DD)	Access Code (if applicable)

Statement under 37 CFR 1.55 or 1.78 for AIA (First Inventor to File) Transition Applications

☐ This application (1) claims priority to or the benefit of an application filed before March 16, 2013 and (2) also contains, or contained at any time, a claim to a claimed invention that has an effective filing date on or after March 16, 2013.

Authorization to Permit Access:

☒ Authorization to Permit Access to the Instant Application by the Participating Offices

If checked, the undersigned hereby grants the USPTO authority to provide the European Patent Office (EPO), the Japan Patent Office (JPO), the Korean Intellectual Property Office (KIPO), the World Intellectual Property Office (WIPO), and any other intellectual property offices in which a foreign application claiming priority to the instant patent application is filed access to the instant patent application. See 37 CFR 1.14(c) and (h). This box should not be checked if the applicant does not wish the EPO, JPO, KIPO, WIPO, or other intellectual property office in which a foreign application claiming priority to the instant patent application is filed to have access to the instant patent application.

In accordance with 37 CFR 1.14(h)(3), access will be provided to a copy of the instant patent application with respect to: 1) the instant patent application-as-filed; 2) any foreign application to which the instant patent application claims priority under 35 U.S.C. 119(a)-(d) if a copy of the foreign application that satisfies the certified copy requirement of 37 CFR 1.55 has been filed in the instant patent application; and 3) any U.S. application-as-filed from which benefit is sought in the instant patent application.

In accordance with 37 CFR 1.14(c), access may be provided to information concerning the date of filing this Authorization.

Application Data Sheet 37 CFR 1.76	Attorney Docket Number	01997-0358008
	Application Number	13/789,860
Title of Invention	WIRELESS ENERGY TRANSFER	

Application Data Sheet 37 CFR 1.76	Attorney Docket Number	01997-0358008
	Application Number	13/789,860
Title of Invention	WIRELESS ENERGY TRANSFER	

Applicant Information:

Providing assignment information in this section does not substitute for compliance with any requirement of part 3 of Title 37 of CFR to have an assignment recorded by the Office.		
Applicant 1		
If the applicant is the inventor (or the remaining joint inventor or inventors under 37 CFR 1.45), this section should not be completed. The information to be provided in this section is the name and address of the legal representative who is the applicant under 37 CFR 1.43; or the name and address of the assignee, person to whom the inventor is under an obligation to assign the invention, or person who otherwise shows sufficient proprietary interest in the matter who is the applicant under 37 CFR 1.46. If the applicant is an applicant under 37 CFR 1.46 (assignee, person to whom the inventor is obligated to assign, or person who otherwise shows sufficient proprietary interest) together with one or more joint inventors, then the joint inventor or inventors who are also the applicant should be identified in this section.		
☒ Assignee	☐ Legal Representative under 35 U.S.C. 117	☐ Joint Inventor
☐ Person to whom the inventor is obligated to assign.	☐ Person who shows sufficient proprietary interest	
If applicant is the legal representative, indicate the authority to file the patent application, the inventor is:		
Name of the Deceased or Legally Incapacitated Inventor :		
If the Applicant is an Organization check here. ☒		
Organization Name	Massachusetts Institute of Technology	

Prefix	Given Name	Middle Name	Family Name	Suffix

Mailing Address Information:			
Address 1	77 Massachusetts Avenue		
Address 2			
City	Cambridge	State/Province	MA
Country	United States	Postal Code	02142
Phone Number		Fax Number	
Email Address			

Non-Applicant Assignee Information:

Providing assignment information in this section does not substitute for compliance with any requirement of part 3 of Title 37 of CFR to have an assignment recorded by the Office.
Assignee 1
Complete this section only if non-applicant assignee information is desired to be included on the patent application publication in accordance with 37 CFR 1.215(b). Do not include in this section an applicant under 37 CFR 1.46 (assignee, person to whom the inventor is obligated to assign, or person who otherwise shows sufficient proprietary interest), as the patent application publication will include the name of the applicant(s).

Application Data Sheet 37 CFR 1.76	Attorney Docket Number	01997-0358008
	Application Number	13/789,860
Title of Invention	WIRELESS ENERGY TRANSFER	

If the Assignee is an Organization check here. ☐				
Organization Name				
Prefix	Given Name	Middle Name	Family Name	Suffix

Mailing Address Information:			
Address 1			
Address 2			
City		State/Province	
Country		Postal Code	
Phone Number		Fax Number	
Email Address			

Signature:

A signature of the applicant or representative is required in accordance with 37 CFR 1.33 and 10.18. Please see 37 CFR 1.4(d) for the form of the signature.					
Signature				Date	4/11/2013
First Name	Marc	Last Name	Wefers	Registration Number	56,842

Substitute Disclosure Form	U.S. Department of Commerce Patent and Trademark Office	Attorney Docket No. 01997-0358008	Application No. 13/789,860
Information Disclosure Statement by Applicant (Use several sheets if necessary) (37 CFR §1.98(b))		Applicant Aristeidis Karalis et al.	
		Filing Date March 8, 2013	Group Art Unit

U.S. Patent Documents							
Examiner Initial	Desig. ID	Document Number	Publication Date	Patentee	Class	Subclass	Filing Date If Appropriate
	1	2005/0125093	6/9/2005	Kikuchi et al.			
	2						

Foreign Patent Documents or Published Foreign Patent Applications								
Examiner Initial	Desig. ID	Document Number	Publication Date	Country or Patent Office	Class	Subclass	Translation Yes	Translation No
	3	EP 1 521 206	04/06/2005	Europe				
	4							

Other Documents (include Author, Title, Date, and Place of Publication)		
Examiner Initial	Desig. ID	Document
	5	Copy of European Search Report with regard to Application Serial No. 11184066.6 by Examiner Konstantin Kanelis dated March 20, 2013
	6	

Examiner Signature	Date Considered

EXAMINER: Initials citation considered. Draw line through citation if not in conformance and not considered. Include copy of this form with next communication to applicant.

Substitute Disclosure Form

(19) Europäisches Patentamt
European Patent Office
Office européen des brevets

(11) EP 1 521 206 A2

(12) EUROPEAN PATENT APPLICATION

(43) Date of publication:
06.04.2005 Bulletin 2005/14

(51) Int Cl.[7]: **G06K 19/07**

(21) Application number: **04023231.6**

(22) Date of filing: **29.09.2004**

(84) Designated Contracting States:
AT BE BG CH CY CZ DE DK EE ES FI FR GB GR HU IE IT LI LU MC NL PL PT RO SE SI SK TR
Designated Extension States:
AL HR LT LV MK

(30) Priority: **01.10.2003 JP 2003343616**

(71) Applicant: **SONY CORPORATION**
Tokyo (JP)

(72) Inventors:
- **Kikuchi, Akihiro, c/o Sony Corporation**
  Tokyo (JP)
- **Sawada, Junichi, c/o Sony Engineering Corporation**
  Tokyo (JP)
- **Ishigaki, Masato, c/o Sony Corporation**
  Tokyo (JP)

(74) Representative: **Müller - Hoffmann & Partner Patentanwälte,**
Innere Wiener Strasse 17
81667 München (DE)

(54) Relaying apparatus and communication system

(57) A relaying device for providing optimum communication between a non-contact information medium and an information read/ write device, and a communication system employing the relaying device, in which the adverse effect on communication, brought about by limitations on the mounting site of the information read/ write device may be eliminated. The relaying device is formed by a resonance circuit 34 including a first antenna coil 31, electro-magnetically coupled to an antenna coil 11 of the information read/ write device 10, a second antenna coil 32, connected in series with the first antenna coil 31 and electro-magnetically coupled to an antenna coil 21 of the non-contact information medium 20, and a tuning capacitor 33 connected in series with the first antenna coil 31 and the second antenna coil 32. The first antenna coil 31, second antenna coil 32 and the tuning capacitor 33 making up the resonance circuit 34 is resonated with the same resonance frequency as that of the resonance circuit 13 of the information read/ write device 10 and that of the resonance circuit 23 of the non-contact information medium 20.

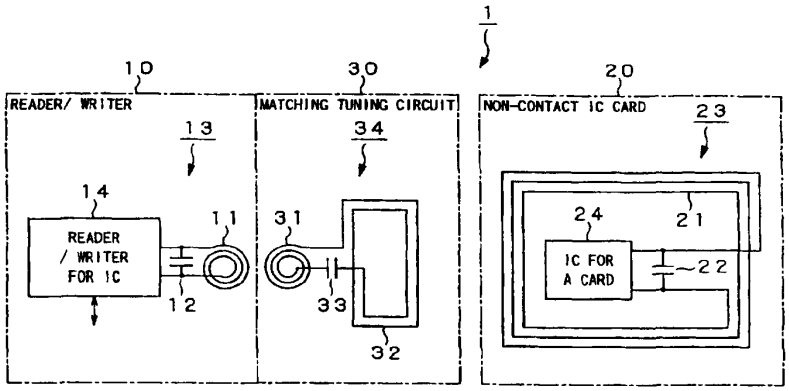

FIG. 1

EP 1 521 206 A2

Printed by Jouve, 75001 PARIS (FR)

InductEV, Inc.
Exhibit 1031
Page 164

Description

BACKGROUND OF THE INVENTION

Field of the Invention

[0001] This Invention relates to an RFID (Radio Frequency IDentification) employing a non-contact information medium, such as a non-contact IC (Integrated Circuit) tag or a non-contact IC card. More particularly, it relates to a relaying device for providing optimum communication between a non-contact information medium and an information read/ write device, and to a communication system employing the relaying device.

[0002] The RFID system, as the communication system employing a non-contact information medium, such as a non-contact IC card or a non-contact IC tag, has been devised and put to practical use. The RFID system allows information communication to be performed between an IC chip enclosed in the non-contact information medium, and a reader/writer, and is utilized in an automatic ticket checker in a railroad station or for book lending in a lending library. It is estimated that, in near future, the system will be used for exchanging the private information in a wide variety of fields.

[0003] The non-contact IC card is a generic term for a card-shaped non-contact information medium, such as a so-called credit card. On the other hand, the non-contact IC tag is a generic term for a non-contact information medium of a shape other than the card shape, a non-contact information medium of a label size smaller than the credit card size, such as a stamp size or a size smaller than the stamp size, or a non-contact information medium of a round or a star shape.

[0004] In the RFID system by the electro-magnetic coupling system, the non-contact information medium receives electrical waves, transmitted from the reader/ writer, to obtain the operating power from the received electrical waves by electro-magnetic induction, and effects data communication with the reader/ writer by exploiting the received electrical waves. The non-contact information medium and the reader/ writer each include an antenna coil for transmitting/ receiving the electrical waves. The optimum communication distance between the reader/ writer of the electro-magnetic coupling system and the non-contact information medium is usually several cm to tens of cm.

[Patent Publication 1] Japanese Laid-Open Patent Publication 2000-315908

[0005] For example, if the non-contact information medium is a non-contact IC card, the card size of the same size as the credit card size (54 mm in length, 85.6 mm in width and 0.76 mm in thickness), as provided for by the ISO (International Organization for Standardization), is generally used.

[0006] In such case, the antenna coil 100, enclosed in the non-contact IC card, is sized to approximately the size of the non-contact IC card, in order to permit the largest amount possible of the flux from the reader/ writer as possible to traverse the inside of the coil, as shown in Fig. 17A. If the non-contact information medium is a non-contact IC tag, the antenna coil is of such a shape as to permit the largest amount possible of the flux to traverse the inside of the coil, depending on the standard or the size of the non-contact IC tag.

[0007] In this manner, the shape of the antenna coil of the non-contact information medium is determined to a more or less extent by e.g. the relevant standard.

[0008] On the other hand, the shape of the antenna coil of the reader/writer is appreciably influenced by the structure of the equipment carrying the reader/writer thereon.

[0009] In case the inside space of a casing of the device carrying the reader/writer thereon is occupied by densely arranged component parts, there is not sufficient space available for properly mounting the reader/ writer. In such case, the antenna coil area is decreased compared to the available space in the casing, or the reader/writer is mounted on the back side of the casing of the carrying device, in order to exploit the small space left in the casing.

[0010] In particular, if the reader/writer is mounted on the back side of the casing of the carrying device, an aperture must be formed in a portion of the casing in order to pass the magnetic flux emanating from the magnetic field generated by the antenna coil of the reader/ writer to the antenna coil of the non-contact information medium.

[0011] In general, the casing is provided for protecting the circuitry in the casing against impacts from outside, or for shielding the electro-magnetic noise, emanating from the electronic circuit in the casing and hence the processing such as perforating the casing is to be avoided as far as is possible. If the casing is to be perforated, out of necessity, the area of an aperture produced needs to be as small as possible.

[0012] Consequently, the antenna coil of the reader/ writer is of an extremely small size as compared the size of the antenna coil enclosed in the non-contact information medium. For example, an antenna coil 200 of the reader/writer, shown in Fig. 17B, is of a size appreciably smaller than the size of the antenna coil 100 enclosed in the inside of the non-contact IC card shown in Fig. 17A.

[0013] If the size of the antenna coil on the reader/ writer side is this small, the amount of the magnetic flux generated by the current flowing in the antenna coil is also extremely small, so that, if the non-contact information medium is moved to the vicinity of the antenna coil of the reader/ writer, the amount of the magnetic flux necessary to operate the non-contact information medium cannot be generated.

[0014] Fig.18 shows the manner in which the magnetic flux by the magnetic field generated by the antenna

InductEV, Inc.
Exhibit 1031
Page 165

coil 200 provided to the reader/writer traverses the inside of the antenna coil 100 enclosed within the non-contact IC card. As may be seen from Fig. 18, since it is the magnetic flux by the magnetic field at the center of the antenna coil 200 that traverses the inside of the antenna coil 100, the antenna coil 100 must be moved to a position closer to the antenna coil 200 in order to procure an appropriate amount of the magnetic flux.

[0015] Fig. 19 shows a communication system 150, made up by a reader/ writer 201 having an antenna coil 200, mounted to the back side of the metal casing 205, and by a non-contact IC card 101, having an antenna coil 100.

[0016] The reader/writer 201 includes an antenna coil 200, as an inductor arranged on a substrate 204, a tuning capacitor 203, connected in series with the antenna coil 200, to form a parallel resonance circuit, and an IC for a reader/writer 202 for controlling the data transmission/ receipt with the non-contact IC card 101. A casing 205, having the reader/ writer 201 mounted thereon, is perforated at 205A in register with the antenna coil 200.

[0017] In a majority of cases, the casing 205 of the equipment, adapted for loading the reader/ writer 201 thereon, is formed of metal for procuring the strength or for preventing leakage to outside of the electro-magnetic noise caused by the internal electronic circuitry. However, if a substrate 204 is mounted to the metal casing 205, the magnetic flux of the magnetic filed, generated by the antenna coil 200, is lost in the casing 205, such that it is only the small amount of the magnetic flux generated at the center of the antenna coil 200 that is allowed to pass through the inside of the antenna coil of the non-contact IC card 101.

[0018] Thus, with the communication system 150, shown in Fig. 19, the non-contact IC card 101 and the reader/writer 201 cannot communicate with each other.

[0019] That is, a wide variety of constraints are imposed on the antenna coil of the reader/writer, by the structure of the equipment adapted for loading the reader/writer thereon, such that it is difficult to set the antenna coil shape or area in such a manner as to permit optimum communication with the non-contact information medium. There is also a problem that, given the limited space within the equipment adapted for loading the reader/ writer thereon, it is also extremely difficult to eliminate the adverse effect of the metal components interfering with the wireless communication.

[0020] For overcoming this deficiency, the antenna coil of the reader/ writer 201 is designed as an antenna coil 210 substantially coextensive as the antenna coil of the non-contact IC card, and is mounted on the back side of a resin cover 220, fitted to the casing 205, so as to operate as a relaying antenna, as shown in Fig.21. In this manner, it is possible to cope with the constraint of the antenna area or to eliminate the adverse effect from the metal casing 205.

[0021] The antenna coil 210 is connected to the substrate 204 by fitting a jack 212, mounted to the distal end of a lead wire 211. extending from the antenna coil 210, into a plug 213 provided to the substrate 202 exposed through the aperture 205A formed in the casing 205.

[0022] Consequently, the antenna coil 210 is inconvenient to mount or dismantle, especially for maintenance, such that, in the worst of cases, the lead wire 211 may be ruptured, or the reader/ writer 201 may be destroyed.

SUMMARY OF THE INVENTION

[0023] In view of the above-depicted status of the art, it is an object of the present invention to provide a relaying device and a communication system in which, in wireless communication by the electro-magnetic coupling system between an information read/write device and a non-contact information medium, mediated by a carrier wave of a preset frequency, the adverse effect on the communication, brought about by the limitation as to the mounting site of the information read/write device, may be eliminated, and the use configuration of the information read/write device and a non-contact information medium may be flexibly coped with to achieve optimum communication.

[0024] In one aspect, the present invention provides a relaying apparatus for relaying wireless communication of the electro-magnetic coupling system, mediated by a carrier wave of a preset frequency, between an information read/write device and a non-contact information medium. The relaying apparatus comprises a first antenna coil electro-magnetically coupled to an antenna coil of the information read/ write device, a second antenna coil, connected in series with the first antenna coil and electro-magnetically coupled with an antenna coil of the non-contact information medium, and a tuning capacitor connected in series with the first antenna coil and with the second antenna coil. The first antenna coil, second antenna coil and the tuning capacitor form a resonance circuit resonated at the resonance frequency which is the same as the resonance frequency of a resonance circuit of the read/ write device and the resonance frequency of a resonance circuit of the non-contact information medium.

[0025] In another aspect, the present invention provides a relaying device for providing optimum communication between a non-contact information medium and an information read/write device, and a communication system employing the relaying device, in which the adverse effect on communication, brought about by limitations on the mounting site of the information read/ write device may be eliminated. The relaying device is formed by a resonance circuit including a first antenna coil, electro-magnetically coupled to an antenna coil of the information read/ write device, a second antenna coil, connected in series with the first antenna coil and electro-magnetically coupled to an antenna coil of the non-contact information medium, and a tuning capacitor connected in series with the first antenna coil and the

InductEV, Inc.
Exhibit 1031
Page 166

second antenna coil. The first antenna coil, second antenna coil and the tuning capacitor making up the resonance circuit is resonated with the same resonance frequency as that of the resonance circuit of the information read/ write device and that of the resonance circuit of the non-contact information medium.

[0026] In a further aspect, the present invention provides a communication system for wireless communication of the electro-magnetic coupling system, mediated by a carrier wave of a preset frequency, in which the communication system comprises an information read/ write device including a first resonance circuit made up by a first antenna coil and by a first tuning capacitor connected in series with the first antenna coil, with the information read/write device having wireless communication with a circuit electro-magnetically coupled to the first antenna coil, with the resonance frequency of the first resonance circuit as the frequency of the carrier wave. The communication system also comprises a non-contact information medium including a second resonance circuit made up by a second antenna coil and by a second tuning capacitor connected in series with the second antenna coil, with the second resonance circuit resonating with a resonance frequency which is the same as the resonance frequency of the first resonance circuit and having wireless communication with a circuit electro-magnetically coupled to the second antenna coil, and a relaying device including a third resonance circuit, made up by a third antenna coil, electro-magnetically coupled to the first antenna coil of the information write device, a fourth antenna coil connected in series with the third coil and electro-magnetically coupled with the antenna coil of the non-contact information medium, and a third tuning capacitor connected in series with the third and fourth antenna coils. The third relaying circuit resonates with the same resonance frequency as the resonance frequency of the first resonance circuit and the second resonance circuit. The relaying device relays the wireless communication between the information read/write device and the non-contact information medium.

[0027] In yet another aspect, the present invention provides a communication system for wireless communication of the electro-magnetic coupling system, mediated by a carrier wave of a preset frequency, in which the communication system comprises an information read/write device including a first resonance circuit made up by a first antenna coil and by a first tuning capacitor connected in series with the first antenna coil, with the information read/ write device having wireless communication with a circuit electro-magnetically coupled to the first antenna coil, with the resonance frequency of the first resonance circuit as the frequency of the carrier wave. The communication system also comprises a non-contact information medium including a second resonance circuit made up by a second antenna coil and by a second tuning capacitor connected in series with the second antenna coil, with the second resonance circuit resonating with a resonance frequency which is the same as the resonance frequency of the first resonance circuit and having wireless communication with a circuit electro-magnetically coupled to the second antenna coil, and a relaying device including a third resonance circuit, made up by a third antenna coil, electro-magnetically coupled to the first antenna coil of the information write device, a fourth antenna coil connected in series with the third coil and electro-magnetically coupled with the antenna coil of the non-contact information medium, and a third tuning capacitor connected in series with each of the third and fourth antenna coils. The third relaying circuit resonates with the same resonance frequency as the resonance frequency of the first resonance circuit and the second resonance circuit. The relaying device relays the wireless communication between the information read/write device and the non-contact information medium.

[0028] The relaying device of the present invention includes, for wireless communication by the electro-magnetic coupling system between the information read/ write device and the non-contact information medium, a first antenna coil, electro-magnetically coupled to an antenna coil of the information read/write device, and a second antenna coil, electro-magnetically coupled to an antenna coil of the non-contact information medium, and assures optimum wireless communication even in cases wherein the antenna coil of the information read/ write device has a shape and a size differing appreciably from those of the antenna coil of the non-contact information medium.

[0029] The wireless communication between the non-contact information medium and a wide variety of use configurations of the read/ write device may be optimized by a simple technique of changing the size/ shape of the first and second antenna coils of the relaying device so that the first and second antenna coils may be electro-magnetically coupled to the antenna coils of the information read/ write device and the non-contact information medium, respectively.

[0030] The communication system of the present invention includes, for wireless communication by the electro-magnetic coupling system between the information read/write device and the non-contact information medium, a third antenna coil, electro-magnetically coupled to the first antenna coil of the information read/ write device, and a fourth antenna coil, electro-magnetically coupled to the second antenna coil of the non-contact information medium, and assures optimum wireless communication even in cases wherein the antenna coil of the information read/write device has a shape and a size differing appreciably from those of the antenna coil of the non-contact information medium.

[0031] Moreover, the wireless communication between the non-contact information medium and a wide variety of use configurations of the read/write device may be optimized by a simple technique of changing the size/shape of the third and fourth antenna coils of the

InductEV, Inc.
Exhibit 1031
Page 167

relaying device of the communication system so that the third and fourth antenna coils will be electro-magnetically coupled to the first antenna coils of the information read/write device and the second antenna coil of the non-contact information medium, respectively.

[0032] In case limitations are imposed on the space in which to mount the first antenna coil, it is sufficient that the third antenna coil is changed in shape/size so as to be electrically coupled to the first antenna coil. In case limitations are imposed that the first antenna coil has to be mounted on a metal component, such as a casing, the size of the first antenna coil or the aperture formed in the casing may be of the smallest size possible to assure the strength of the casing as well as to avoid adverse effects by the metal components.

[0033] The relaying device of the communication system of the present invention performs wireless communication of the electromagnetic coupling system with the information read/ write device, no laborious processing, such as wiring, is needed, and is able to relay the wireless communication with the non-contact information medium by fitting the relaying device on a removable cover or to a door that may be opened/closed.

BRIEF DESCRIPTION OF THE DRAWINGS

[0034]

Fig.1 illustrates the configuration of a communication system sowing the best embodiment of the present invention.

Fig.2 illustrates the configuration of a matching tuning circuit of the communication system.

Fig.3 shows an example of concrete setup of the communication system.

Fig.4 illustrates the configuration of a matching tuning circuit of the communication system.

Fig.5 shows an induction current I flowing in a matching tuning circuit of the communication system.

Fig.6 shows another example of concrete setup of the communication system.

Fig.7 shows a matching tuning circuit provided with a parallel-connected antenna coil.

Fig.8 illustrates an experiment 1 carried out for verifying the effect of the matching tuning circuit.

Fig.9 illustrates a communication range XY in the experiment 1.

Fig. 10 shows the results of an experiment on a communication range Z in the experiment 1.

Fig.11 shows the results of an experiment on the communication range XY in the experiment 1.

Fig. 12 illustrates an experiment 2 carried out for verifying the effect of the matching tuning circuit.

Fig. 13 illustrates an iron plate used in the experiment 2.

Fig. 14 shows the communication range XY in the experiment 2.

Fig. 15 shows the results of an experiment on the communication range Z in the experiment 2.

Fig.16 shows the results of an experiment on the communication range Z in the experiment 2.

Fig. 17A shows an example of an antenna coil of a non-contact IC card and Fig.17B shows an example of an antenna coil for a reader/writer.

Fig. 18 shows the magnetic flux passed through the antenna coil of the non-contact IC card.

Fig.19 shows an example of concrete setup of a reader/writer of a communication system shown as a prior art.

Fig.20 shows the magnetic flux passed through an antenna coil of a non-contact IC card when an antenna coil of the reader/writer is mounted on a metal chassis.

Fig.21 shows an example of mounting the antenna coil of the reader/ writer of the communication system of the prior art as a relay antenna.

DESCRIPTION OF THE PREFERRED EMBODIMENTS

[0035] Referring now to the drawings, the best embodiments of a relay apparatus and a communication system of the present invention are explained in detail.

[0036] Referring first to Fig. 1, a communication system 1 as the best embodiment for carrying out the present invention is explained.

[0037] The communication system 1, shown in Fig.1, is an RFID (Radio Frequency Identification), by the electromagnetic coupling system, provided with a reader/ writer 10, a non-contact IC card 20, and a matching tuning circuit 30.

[0038] In this communication system 1, the non-contact IC card 20, as a non-contact information medium, receives electrical waves, transmitted from the reader/ writer 10 through the matching tuning circuit 30, to obtain the power by electromagnetic induction, and has data communication with the reader/writer 10, with use of the electrical waves, through the matching tuning circuit 30.

[0039] The reader/ writer 10 includes a parallel resonance circuit 13, comprised of a serial connection of an antenna coil 11, as an inductor, and a tuning capacitor 12. A reader/writer for IC 14 is connected in parallel with this parallel resonance circuit 13. The reader/writer 10 is tuned to a frequency fc in the vicinity of, for example, 13.56MHz, as the a.c. voltage is applied to the parallel resonance circuit 13, under control by the reader/writer for IC 14.

[0040] The reader/writer 10 has wireless communication with the non-contact IC card 20, using the electrical waves, which have modulated a carrier having this frequency fc as the carrier frequency. Although the carrier frequency is the frequency fc, in the following explanation, the carrier frequency fc is not limited to 13.56MHz.

[0041] The reader/writer for IC 14 is provided with an

InductEV, Inc.
Exhibit 1031
Page 168

interfacing circuit, not shown, and is connected to and controlled by a CPU (central processing unit) of a counterpart device, having loaded thereon the reader/writer 10.

[0042] The reader/writer for IC 14 controls the operation in sending data from the reader/ writer 10 to the non-contact IC card 20 and in receiving data sent from the non-contact IC card 20.

[0043] In data transmission, the reader/writer for IC 14 modulates the carrier wave of the carrier frequency fc with data being transmitted to generate transmission signals. As the data modulating system, ASK (amplitude shift keying), PWM (pulse width modulation) or the PSK (phase shift keying), for example, may be used.

[0044] The transmission signals, generated on modulation, are sent to the antenna coil 11 to generate a magnetic field. The magnetic field, generated in the antenna coil 11, is changed in keeping with the transmission signals, such that data carried by the carrier wave with the carrier frequency fc is transmitted, as changes in the magnetic flux, to an antenna coil 31 of the matching tuning circuit 30, electro-magnetically coupled to the antenna coil 11.

[0045] In data receipt, the reader/writer for IC 14 demodulates the data, transmitted from the non-contact IC card 20 through the matching tuning circuit 30 and received as changes in the magnetic flux by the antenna coil 11. On receipt of the data by the antenna coil 11 from the non-contact IC card 20, the induced current is generated in the antenna coil 11 as a result of changes in the magnetic flux in the antenna coil 31 of the matching tuning circuit 30 electro-magnetically coupled with the antenna coil 11.

[0046] As the induced current, generated in the antenna coil 11, is changed with the magnetic flux, the data carried by the carrier wave with the carrier frequency fc is transmitted to the antenna coil 11 as changes in the induced current.

[0047] The reader/ writer for IC 14 demodulates this induced current to acquire data transmitted from the non-contact IC card 20.

[0048] The non-contact IC card 20 includes a parallel resonance circuit 23, which is a serial connection of an antenna coil 21, as an inductor, and a tuning capacitor 22. An IC for a card 24 is connected in parallel with this parallel resonance circuit 23.

[0049] The antenna coil 21 receives the electrical waves, transmitted from the reader/ writer 10 through the matching tuning circuit 30, as changes in the magnetic flux. In the parallel resonance circuit 23, there is generated the induced electromotive force operating in a direction of obstructing changes in the magnetic flux of the electrical waves received by the antenna coil 11. By this induced electromotive force, the parallel resonance circuit 23 is tuned in the vicinity of the frequency fc = 13.56 MHz.

[0050] The IC for a card 24, connected in parallel with the parallel resonance circuit 23, is operated with this induced electromotive force as the operating power. The IC for a card 24, supplied with the operating power, controls the operation in receiving data sent from the reader/ writer 10 and in transmitting data to the reader/ writer 10.

[0051] In data receipt, the IC for a card 24 demodulates the electrical waves, transmitted from the reader/ writer 10 through the matching tuning circuit 30 and received as changed in the magnetic flux in the antenna coil 21.

[0052] In data transmission, the IC for a card 24 modulates the carrier wave, with the carrier frequency fc, with data to be transmitted, to generate transmission signals. The IC for a card 24 changes the load of the antenna coil 21, responsive to data to be transmitted, to modulate the carrier wave, by way of load modulation.

[0053] The transmission signals, generated on modulation, are sent to the antenna coil 21 to generate a magnetic field. As the magnetic field, generated in the antenna coil 21, is changed with the transmission signals, the data carried by the carrier wave, with the carrier frequency fc, is transmitted, as changes in the magnetic flux, to an antenna coil 32 of the matching tuning circuit 30, electro-magnetically coupled with the antenna coil 21.

[0054] The matching tuning circuit 30 includes a parallel resonance circuit 34, comprised of a series connection of an antenna coil 31, as a first inductor, an antenna coil 32, as a second inductor, and a tuning capacitor 33.

[0055] Specifically, the matching tuning circuit 30 is comprised of the antenna coils 31, 32, arranged on a substrate 35, so as to be connected in series with the tuning capacitor 33.

[0056] The antenna coil 31 is electro-magnetically coupled, in a non-contact fashion, with the antenna coil 11, forming the parallel resonance circuit 13 in the reader/writer 10, and is shaped for communicating with the reader/writer 10.

[0057] The antenna coil 31 may be of any suitable shape, on the condition that it may communicate with the reader/ writer 10. For example, the antenna coil 31 may be of an elliptical or a square shape, to say nothing of the circular shape shown in Fig.1.

[0058] The antenna coil 31 does not have to be of the same shape as the antenna coil 11, on the condition that the antenna coil 31 is able to communicate with the reader/writer 10. However, in case the antenna coil 31 is approximately of the same shape and of the same size as the antenna coil 11, the electro-magnetic coupling may be stronger to achieve stable and highly efficient data communication.

[0059] On the other hand, the antenna coil 32 is electro-magnetically coupled, in a non-contact fashion, with the antenna coil 21 on the non-contact IC card 20, forming the parallel resonance circuit 23, such as to communicate with the non-contact IC card 20.

[0060] The antenna coil 32 may be of any suitable shape, on the condition that it may communicate with the reader/ writer 10. For example, the antenna coil 31

InductEV, Inc.
Exhibit 1031
Page 169

may be of an elliptical or a circular shape, to say nothing of the square shape shown in Fig.1.

[0061] The antenna coil 32 is desirably larger in size than the antenna coil 21, provided to the non-contact IC card 20, since then a sufficient amount of the magnetic flux can be passed through the antenna coil 21 even in case the center of the antenna coil 21 is offset from the center of the antenna coil 32.

[0062] For example, in case the non-contact information medium is a non-contact IC card, and is used as a commutation ticket for railway or bus, the non-contact IC card cannot be placed at a constant fixed position at all times with respect to the antenna coil 32 of the matching tuning circuit 30 for data communication. Thus, in such case, the antenna coil 32 is larger in size than the antenna coil of the non-contact IC card to assure more reliable data communication.

[0063] For example, if the non-contact information medium is a non-contact IC tag affixed to a toner cartridge of a printer, as a consumable commodity, and is to have data communication with the reader/writer 10 mounted to a preset inner chassis in a printer casing, in order to manage the residual toner quantity, the non-contact IC tag may be placed in a fixed position relative to the antenna coil 32 of the matching tuning circuit 30 for data communication. Thus, in such a case, more efficient data communication may be had with the antenna coil 32 sized to be approximately equal to the size of the antenna coil of the non-contact IC tag.

[0064] If the antenna coil 32 is slightly smaller in size than the antenna coil 21, communication may be had by adjusting the output of the reader/writer 10.

[0065] The antenna coil 32 does not have to be of the same size and shape as the antenna coil 21, on the condition that the antenna coil 32 is able to communicate with the non-contact IC card 20, as discussed above. However, if the antenna coil 32 is of the same size and shape as the antenna coil 21, the electro-magnetic coupling becomes stronger to realize more efficient stable data communication.

[0066] That is, the size as well as the shape of the antenna coils 31, 32 of the matching tuning circuit 30 is limited to a more or less extent by the shape of the antenna coil 11 of the reader/writer 10 and by the shape of the antenna coil 21 of the non-contact IC card 20, respectively, for the realization of the efficient stable wireless communication.

[0067] With the communication system 1, shown as the best embodiment for carrying out the present invention, the non-contact IC card 20 is used as the non-contact information medium. Hence, in the following explanation, it is assumed that the shape and the size of the antenna coil 32 are approximately the same as those of the antenna coil 21 of the non-contact IC card 20, and also that the shape and the size of the antenna coil 31 are approximately the same as those of the antenna coil 11 of the reader/ writer 10.

[0068] Since the antenna coils 31, 32 are connected in series with each other so that these coils are wound in the same direction, the antenna coils 31, 32 may be deemed to be an inductor having a combined inductance $L = L1 + L2$, where L1 is the inductance of the antenna coil 31 and L2 is the inductance of the antenna coil 32. Consequently, the parallel resonance circuit 34 may be deemed to be a resonance circuit comprised of a series connection of an inductor having a combined inductance L and the tuning capacitor 33.

[0069] Referring to Fig.3, a concrete setup example of the reader/writer 10 and the matching tuning circuit 30 is shown and, based on this setup example, the operating principle of the matching tuning circuit 30 is explained.

[0070] It is assumed that the reader/writer 10, provided on a substrate 15, is mounted on the back side of a metal chassis 50, as a casing of an apparatus on which to mount the reader/ writer 10. The metal chassis 50, on which the reader/writer 10 is mounted in this manner, has an aperture 50A in a location which is to be register with the mounting position of the antenna coil 11 of the reader/ writer 10.

[0071] The opening area of the aperture 50A is selected to be such that the strength of the metal chassis 50 is not impaired and such that there is no risk of leakage of the electromagnetic noise produced by e.g. an electronic circuit within the metal chassis 50. The shape and the size of the antenna coil 11 of the reader/writer 10 are selected so that the antenna coil will be housed within this aperture 50A.

[0072] Since the antenna coil 31 of the matching tuning circuit 30 is shaped so that the antenna coil 31 is electro-magnetically coupled with the antenna coil 11 in a non-contact fashion and so that the antenna coil 31 may communicate with the reader/ writer 10, the shape of the antenna coil 31 is determined to a more or less extent if once the shape of the antenna coil 11 is determined.

[0073] On the other hand, the matching tuning circuit 30 is mounted for facing the reader/ writer 10, mounted on the metal chassis 50, with the metal chassis 50 in-between. The matching tuning circuit 30 is mounted at this time so that the antenna coil 31 overlies the aperture 50A formed in the metal chassis 50. By so doing, the antenna coil 11 of the reader/writer 10 and the antenna coil 31 of the matching tuning circuit 30 may be electromagnetically coupled to each other in a non-contact fashion.

[0074] Since the reader/writer 10 mounted to the metal chassis 50 and the matching tuning circuit 30 may have wireless communication by the antenna coils 11,31 being electromagnetically coupled to each other in a non-contact fashion, no physical connection between the reader/writer 10 and the matching tuning circuit 30 is needed and hence the matching tuning circuit 30 may be mounted in position by a simplified technique of directly bonding the substrate 30 to the metal chassis 50 with e.g. a double-sided adhesive tape.

InductEV, Inc.
Exhibit 1031
Page 170

[0075] The matching tuning circuit 30, mounted to the metal chassis 50 operates as follows, by the electrical waves, transmitted from the reader/writer 10.

[0076] The antenna coil 31 of the parallel resonance circuit 34 of the matching tuning circuit 30 is traversed by a magnetic flux A, generated by a magnetic field, generated in turn by the antenna coil 11 of the reader/ writer 10, for electromagnetically coupling the antenna coils 11, 31 to each other.

[0077] The induced electromotive force is generated in the parallel resonance circuit 34 by the magnetic flux A traversing the antenna coil 31, so that the induced current I by the induced electromotive force flows through the entire circuit. The parallel resonance circuit 34 is tuned by the induced electromotive force in the vicinity of the frequency fc = 13.56 MHz.

[0078] When the induced current I flows through the antenna coil 32, a magnetic field is generated in the coil 32.

[0079] At this time, the non-contact IC card 20 may be moved to the vicinity of the matching tuning circuit 30. Thus, the magnetic flux B, generated by the magnetic field, generated in turn in the antenna coil 32, is passed through the inside of the antenna coil 21, as shown in Fig.4. This electro-magnetically couples the antenna coils 32, 21 to each other.

[0080] When the magnetic flux B traverses the antenna coil 21 of the non-contact IC card 20 in this manner, the non-contact IC card 20 is activated so that the reader/writer 10 and the non-contact IC card 20 are now able to have wireless communication with each other through the matching tuning circuit 30.

[0081] Referring to the cross-sectional view of Fig.6, another setup example of the reader/ writer 10 and the matching tuning circuit 30 is hereinafter explained.

[0082] Referring to Fig.6, the reader/writer 10 is mounted on the back-side surface of a metal chassis 51, as a casing of a device, adapted for being loaded with the reader/ writer 10, so that the antenna coil 11 will be in register with an aperture 51A of the metal chassis 51.

[0083] On the front side surface of the metal chassis 51, having the reader/writer 10 mounted thereon, there is provided a metal component 52, such as a screw, such that the matching tuning circuit 30 cannot directly be mounted thereon, as shown in Fig.6.

[0084] Thus, the matching tuning circuit 30 is mounted in position by bonding the substrate 35 of the matching tuning circuit 30 on the back side surface of a resin cover 53 overlying the aperture 51A of the metal chassis 51.

[0085] The matching tuning circuit 30 is bonded to the back-side surface of the resin cover 53, so that, when the resin cover 53 is mounted to the metal chassis 51, the antenna coil 31 of the matching tuning circuit 30 is in register with the antenna coil 11 of the reader/ writer 10.

[0086] The cover 53, to which is bonded the matching tuning circuit 30, is formed of non-magnetic resin, in order to cause no loss of the magnetic flux by the magnetic field generated in the antenna coil 32 of the matching tuning circuit 30. The substrate 35 of the matching tuning circuit 30 is of an extremely thin thickness, and is e. g. a flexible substrate, so as not to affect the magnetic field generated in the antenna coil 32.

[0087] A shield plate 54 may also be provided in order to prevent the effect of the electromagnetic noise generated in the device designed for carrying the reader/ writer 10. The shield plate 54 needs only to be mounted to overlie the antenna coil 11. At this time, caution should be exercised so that the shield plate 54 is kept aloof from the reader/writer 10 in order to prevent the function of the antenna coil 11 from being impaired.

[0088] The matching tuning circuit 30, mounted to the resin cover 53, may also be mounted to the inner side of a rotatable door, provided to e.g. a casing of the device loaded with the reader/writer 10, in a manner not shown, for saving the spacing.

[0089] Thus, there is no necessity for providing the wiring for the matching tuning circuit 30, in order for the matching tuning circuit 30 to communicate with the reader/ writer 10, and the matching tuning circuit 30 may be separated from the reader/ writer 10 and mounted freely to any place within the sphere of electro-magnetic coupling. The result is the communication system 1 with an extremely high degree of mounting freedom.

[0090] In the matching tuning circuit 30 of the above-described communication system 1, the antenna coils 31, 32 are connected in series with each other. In the communication system 1, a matching tuning circuit 40, in which a parallel resonance circuit 41 is made up by a parallel connection of the antenna coils 31, 32 and the tuning capacitor 33, as shown in Fig.7, may be used in place of the matching tuning circuit 30. The case of using the matching tuning circuit 40 is not explained in detail because the operation of the communication system 1 gives the identical effect in case the matching tuning circuit 40 is used in place of the matching tuning circuit 30.

[0091] Meanwhile, the tuning capacitor 33 is connected in series with both the antenna coils 31, 32, as shown in Fig.7.

[Embodiment]

[0092] By way of an embodiment, the results of an experiment, conducted for measuring the effect by the matching tuning circuit 30, are shown.

[0093] In the experiment, the area which allows for communication for the case of using the matching tuning circuit 30 and that for the case of not using the matching tuning circuit 30, in the wireless communication between the reader/writer 10 and the non-contact IC card 20, were measured and compared to each other.

[0094] The same experiment was conducted as an iron plate having an aperture of the same shape as the antenna coil 11 of the reader/writer 10 was interposed

InductEV, Inc.
Exhibit 1031
Page 171

between the reader/writer 10 and the non-contact IC card 20, in order to verify the effect by the matching tuning circuit 30 under the actual assumed use condition of the matching tuning circuit 30, as shown in Figs.3 and 6.

(Experiment 1)

[0095] In an experiment 1, measurement was made of the area which allows for communication, in case the reader/writer 10 and the non-contact IC card 20 were arranged in a free space devoid of an obstacle, and the reader/writer 10 was activated in this state, and of the area which allows for communication, in case the matching tuning circuit 30 was interposed between the reader/writer 10 and the non-contact IC card 20, and the reader/writer 10 was activated in this state, as shown in Fig.8.

[0096] The antenna coil 11 of the reader/writer 10 was circular in shape, with a diameter on the order of 25 mm. The antenna coil 31 of the matching tuning circuit 30 was of approximately the same shape. The non-contact IC card 20 used was of the size of 54 mm in length, 85.6 mm in width and 0.76 mm in thickness, as provided for in the ISO (International Organization for Standardization). The antenna coil 21, enclosed in the non-contact IC card 20, was wound to approximate the size of the non-contact IC card 20. The antenna coil 32 of the matching tuning circuit 30 was approximately of the same shape as the antenna coil 21.

[0097] The area which allows for communication, and which is to be measured, is now explained. The area which allows for communication, and which is now to be measured, is defined by a distance for communication Z, representing the distance which allows for communication, in case the non-contact IC card 20 is moved vertically relative to the reader/writer 10, and by a distance for communication XY, representing the distance which allows for communication, in case the non-contact IC card 20 is moved horizontally relative to the reader/writer 10.

[0098] Specifically, the distance for communication Z is a distance up to which the communication is possible when the center of the antenna coil 11 of the reader/writer 10, placed horizontally, is confounded with the center of the major plane surface of the non-contact IC card 20, and when the non-contact IC card 20 is moved in the vertical direction, as it is kept parallel to the antenna coil 11.

[0099] The distance for communication XY is a distance up to which the communication is possible when the non-contact IC card 20, placed horizontally at a preset distance with respect to the antenna coil 11 of the reader/writer 10, is optionally moved along the X-axis direction and along the Y-axis direction within the X-Y coordinate plane shown in Fig.9. This distance for communication may be found by measuring the trajectory of the center point of the non-contact IC card 20.

[0100] This distance for communication Z and the distance for communication XY, thus measured, may be used as indexes for the effect of the matching tuning circuit 30.

[0101] First, Fig. 10 shows the results of measurement of the distance for communication Z without the matching tuning circuit 30 and the results of measurement of the distance for communication Z with the matching tuning circuit 30 placed in position. Meanwhile, since the matching tuning circuit 30 is mounted at a distance of 10 mm from the antenna coil 11 of the non-contact IC card 10, the distance for communication for the case the matching tuning circuit 30 is placed in position was measured from the position of the intervening matching tuning circuit 30.

[0102] The distance for communication Z without the matching tuning circuit 30 was 10 to 25 mm, as shown in Fig. 10. The same distance Z with the matching tuning circuit 30 interposed in position was 20 to 75 mm. Thus, it may be seen that, by placing the matching tuning circuit 30 between the reader/writer 10 and the non-contact IC card 20, the distance for communication Z is approximately tripled.

[0103] If, in case the matching tuning circuit 30 is placed in position, the non-contact IC card 20 is at a distance of 10 to 20 mm from the antenna coil 11, the communication becomes infeasible because the non-contact IC card 20 and the matching tuning circuit 30 interfere with each other and become unstable in operation. This inconvenience may be overcome by strictly matching the resonance frequency of the non-contact IC card 20 to that of the matching tuning circuit 30 or by significantly separating the two resonance frequencies from each other.

[0104] Fig. 11 shows the results of measurement of the distance for communication XY without the matching tuning circuit 30 and the results of measurement of the distance for communication XY with the matching tuning circuit 30 placed in position.

[0105] In case the matching tuning circuit 30 is not used, the distance for communication XY was measured at a location separated in the vertical direction by 10 mm from the center of the antenna coil 11 of the reader/writer 10. In case the matching tuning circuit 30 is used, the distance for communication XY was measured at a location separated 10 mm in the vertical direction from the center of the antenna coil 32 of the matching tuning circuit 30.

[0106] Meanwhile, the location of insertion of the matching tuning circuit 30 is 10 mm away from the reader/writer 10, as set forth above.

[0107] In the absence of the matching tuning circuit 30, the distance for communication XY is such that $-30 \leq X$ (mm) ≤ 30 and $-15 \leq Y$ (mm) ≤ 15, as shown in Fig. 11. That is, the distance for communication XY is defined to be the inside of an ellipsis, with a long axis of 60 mm and a short axis of 30 mm, as indicated by a broken line.

[0108] In case the matching tuning circuit 30 is placed in position, the distance for communication XY is such

InductEV, Inc.
Exhibit 1031
Page 172

that -50 ≤ X (mm) ≤50 and -40 ≤ Y (mm) ≤40, as shown in Fig. 11. That is, in Fig. 11, the distance for communication XY is defined to be the inside of an ellipsis, with a long axis of 100 mm and a short axis of 80 mm, as indicated by a solid line.

[0109] Thus, it may be seen that, by placing the matching tuning circuit 30 between the reader/ writer 10 and the non-contact IC card 20, the distance for communication XY is quadrupled.

(Experiment 2)

[0110] In the experiment 2, the reader/writer 10 was bonded to an iron plate 60, which iron plate, stuck to the reader/writer 10, was placed so as to prove an obstacle between the reader/writer 10 and the non-contact IC card 20 to approximate the actual use state, as shown in Fig.12. The distance for communication Z and the distance for communication XY were measured for the case in which the matching tuning circuit 30 was used and for the case in which the matching tuning circuit 30 was not used.

[0111] In the iron plate 60, there is bored an aperture 60A of approximately the same shape as that of the antenna coil 1 of the reader/writer 10. When the reader/ writer 10 is stuck to the iron plate 60, attention is to be paid so that the aperture 60A is in register with the antenna coil 11.

[0112] In the experiment 2, the reader/writer 10, non-contact IC card 20 and the matching tuning circuit 30 used are to be exactly the same as those used in the experiment 1. In using the matching tuning circuit 30, a spacer 61 is interposed between the iron plate 60 and the matching tuning circuit 30, and the separation between the antenna coil 11 of the reader/ writer 10 and the matching tuning circuit 30 is set to 5 mm, as shown in Fig.12.

[0113] The measured results of the distance for communication Z, shown in Fig. 12, and those for the distance for communication XY, shown in Fig. 14, are shown below. First, Fig. 15 shows the measured results of the distance for communication Z, in the absence of the matching tuning circuit 30, and those of the distance for communication Z with the matching tuning circuit 30 placed in position. Meanwhile, since the matching tuning circuit 30 in the experiment 2 is placed at a separation of 5 mm from the antenna coil 11 of the reader/writer 10, the distance for communication Z was measured from the position of the matching tuning circuit 30.

[0114] In the absence of the matching tuning circuit 30, the communication disabled state was invited, in which communication is disabled under the influence of the iron plate 60, as shown in Fig. 15. The distance for communication Z, in case the matching tuning circuit 30 was placed in position, was 5 to 35 mm.

[0115] Thus, by introducing the matching tuning circuit 30 between the reader/writer 10 non-contact IC card 20, the wireless communication by the reader/ writer 10 and the non-contact IC card 20 may be improved from the communication disabled state to a practically satisfactory state.

[0116] Fig. 16 shows the measured results of the distance for communication XY in the absence of the matching tuning circuit 30 and those of the same distance with the matching tuning circuit 30 placed in position.

[0117] In the absence of the matching tuning circuit 30, the distance for communication XY was measured at a position 5mm spaced apart in the vertical direction from the center of the antenna coil 11 of the reader/writer 10 and, in case the matching tuning circuit 30 was placed in position, the same distance XY was measured at a location 5 mm spaced apart from the center of the antenna coil 32 of the matching tuning circuit 30.

[0118] It is noted that the matching tuning circuit 30 is introduced at a position 5 mm spaced apart from the antenna coil 11 of the reader/writer 10, as noted previously.

[0119] In case the matching tuning circuit 30 is not used, the communication is disabled, as shown in Fig. 16. The distance for communication XY is such that -35 ≤ X (mm) ≤ 35 and -20 ≤ Y (mm) ≤ 20. That is, as shown in Fig.16, the distance for communication XY is defined to be the inside of an ellipsis, with a long axis of 70 mm and a short axis of 40 mm, as indicated by a solid line in Fig.16.

[0120] Thus, it may be seen that, by placing the matching tuning circuit 30 between the reader/ writer 10 and the non-contact IC card 20, the wireless communication by the reader/ writer 10 and the non-contact IC card 20 may be improved from the communication disabled state to a practically satisfactory state.

Claims

1. A relaying apparatus for relaying wireless communication of the electro-magnetic coupling system, mediated by a carrier wave of a preset frequency, between an information read/write device and a non-contact information medium, said relaying apparatus comprising

   a first antenna coil electro-magnetically coupled to an antenna coil of said information read/ write device;

   a second antenna coil, connected in series with said first antenna coil and electro-magnetically coupled with an antenna coil of said non-contact information medium; and

   a tuning capacitor connected in series with said first antenna coil and with said second antenna coil;

   said first antenna coil, second antenna coil and the tuning capacitor forming a resonance circuit resonated at the resonance frequency which is the same as the resonance frequency of a resonance circuit of said read/write device and the resonance

InductEV, Inc.
Exhibit 1031
Page 173

frequency of a resonance circuit of said non-contact information medium.

2. The relaying apparatus according to claim 1 wherein said first antenna coil is of approximately same size and shape as those of the antenna coil of said read/write device, and wherein

said second antenna coil is of approximately same size and shape as those of the antenna coil of said non-contact information medium.

3. A relaying apparatus for relaying wireless communication of the electro-magnetic coupling system, mediated by a carrier wave of a preset frequency, between an information read/write device and a non-contact information medium, said relaying apparatus comprising

a first antenna coil electro-magnetically coupled to an antenna coil of said information read/write device;

a second antenna coil, connected in parallel with said first antenna coil and electro-magnetically coupled with an antenna coil of said non-contact information medium; and

a tuning capacitor connected in series with said first antenna coil and with said second antenna coil connected parallel to said first antenna coil;

said first antenna coil, second antenna coil and the tuning capacitor forming a resonance circuit resonated at the resonance frequency which is the same as the resonance frequency of a resonance circuit of said read/write device and the resonance frequency of a resonance circuit of said non-contact information medium.

4. The relaying apparatus according to claim 3 wherein said first antenna coil is of approximately same size and shape as those of the antenna coil of said read/write device, and wherein

said second antenna coil is of approximately same size and shape as those of the antenna coil of said non-contact information medium.

5. A communication system for wireless communication of the electro-magnetic coupling system, mediated by a carrier wave of a preset frequency, said communication system comprising

an information read/write device including a first resonance circuit made up by a first antenna coil and by a first tuning capacitor connected in series with said first antenna coil, said information read/ write device having wireless communication with a circuit electro-magnetically coupled to said first antenna coil, with the resonance frequency of said first resonance circuit as said frequency of said carrier wave;

a non-contact information medium including a second resonance circuit made up by a second antenna coil and by a second tuning capacitor connected in series with said second antenna coil, said second resonance circuit resonating with a resonance frequency which is the same as the resonance frequency of said first resonance circuit and having wireless communication with a circuit electro-magnetically coupled to said second antenna coil; and

a relaying device including a third resonance circuit, made up by a third antenna coil, electromagnetically coupled to said first antenna coil of said information write device, a fourth antenna coil connected in series with said third coil and electromagnetically coupled with the antenna coil of said non-contact information medium, and a third tuning capacitor connected in series with said third and fourth antenna coils, said third relaying circuit resonating with the same resonance frequency as the resonance frequency of said first resonance circuit and said second resonance circuit, said relaying device relaying the wireless communication between said information read/write device and said non-contact information medium.

6. The communication system according to claim 5 wherein

said third antenna coil of said relaying device is approximately of the same size and shape as said first antenna coil of said information read/write device; and wherein

said second antenna coil of said relaying device is approximately of the same size and shape as said second antenna coil of said non-contact information medium.

7. A communication system for wireless communication of the electro-magnetic coupling system, mediated by a carrier wave of a preset frequency, said communication system comprising

an information read/ write device including a first resonance circuit made up by a first antenna coil and by a first tuning capacitor connected in series with said first antenna coil, said information read/write device having wireless communication with a circuit electro-magnetically coupled to said first antenna coil, with the resonance frequency of said first resonance circuit as said frequency of said carrier wave;

a non-contact information medium including a second resonance circuit made up by a second antenna coil and by a second tuning capacitor connected in series with said second antenna coil, said second resonance circuit resonating with a resonance frequency which is the same as the resonance frequency of said first resonance circuit and having wireless communication with a circuit electro-magnetically coupled to said second antenna coil; and

InductEV, Inc.
Exhibit 1031
Page 174

a relaying device including a third resonance circuit, made up by a third antenna coil, electromagnetically coupled to said first antenna coil of said information write device, a fourth antenna coil connected in series with said third coil and electromagnetically coupled with the antenna coil of said non-contact information medium, and a third tuning capacitor connected in series with each of said third and fourth antenna coils, said third relaying circuit resonating with the same resonance frequency as the resonance frequency of said first resonance circuit and said second resonance circuit, said relaying device relaying the wireless communication between said information read/write device and said non-contact information medium.

8. The communication system according to claim 7 wherein

said third antenna coil of said relaying device is approximately of the same size and shape as said first antenna coil of said information read/write device; and wherein

said second antenna coil of said relaying device is approximately of the same size and shape as said second antenna coil of said non-contact information medium.

InductEV, Inc.
Exhibit 1031
Page 175

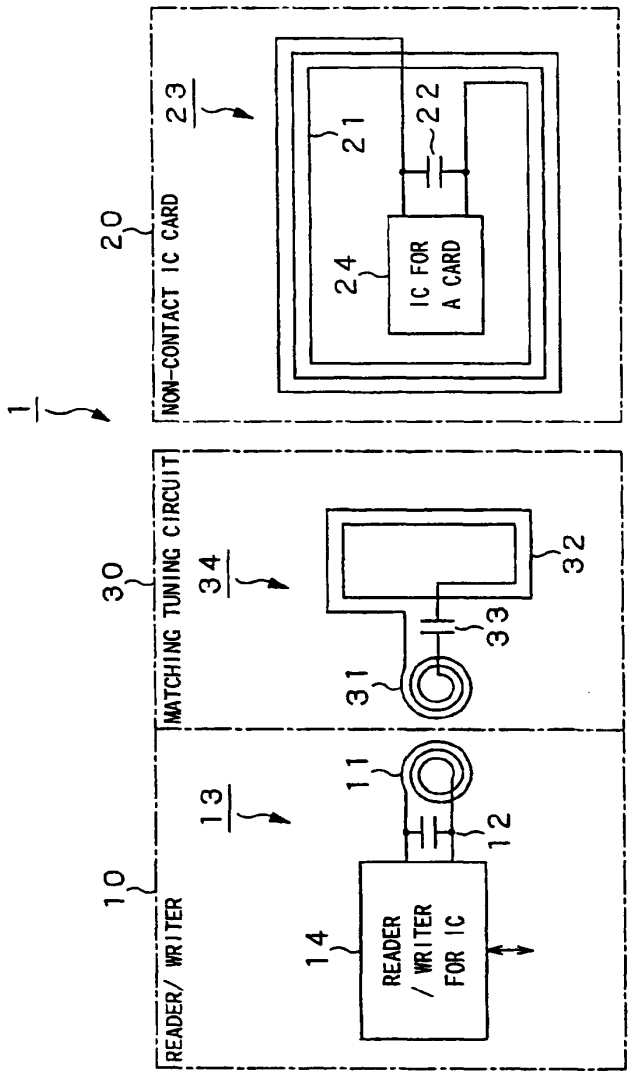

FIG. 1

InductEV, Inc.
Exhibit 1031
Page 176

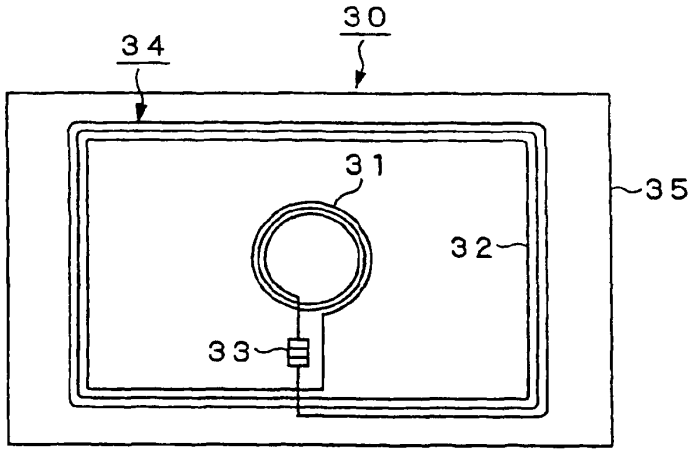

FIG.2

InductEV, Inc.
Exhibit 1031
Page 177

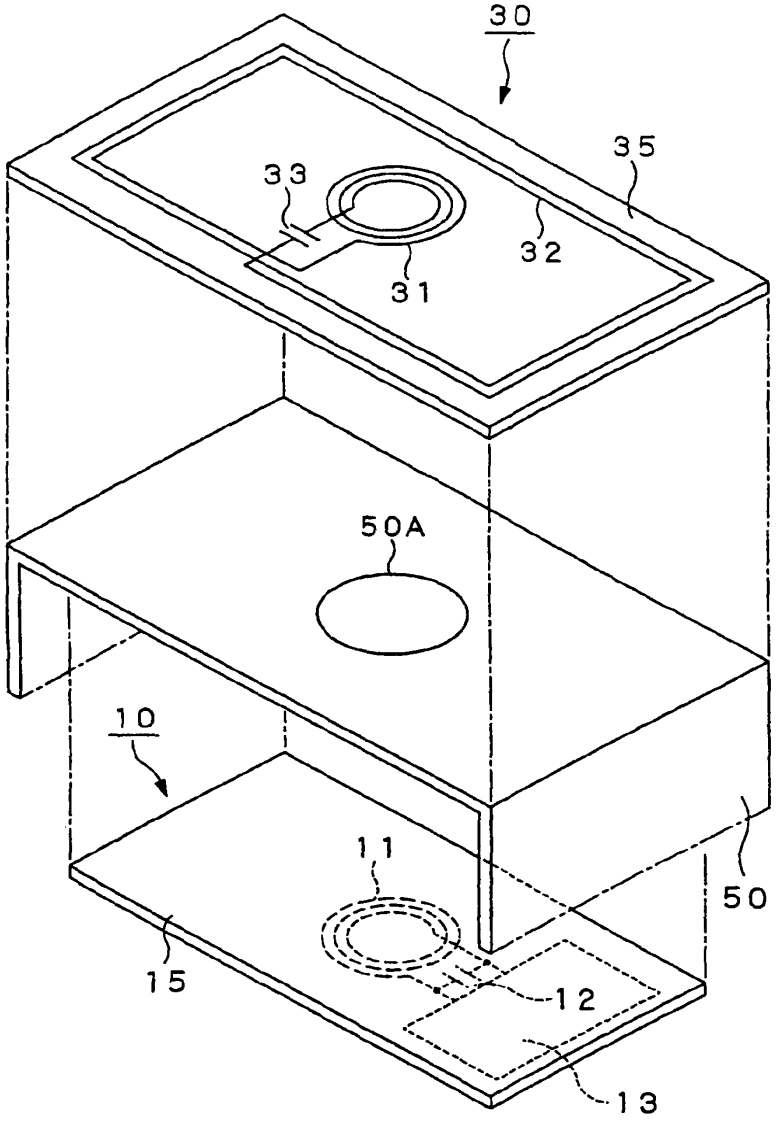

FIG.3

InductEV, Inc.
Exhibit 1031
Page 178

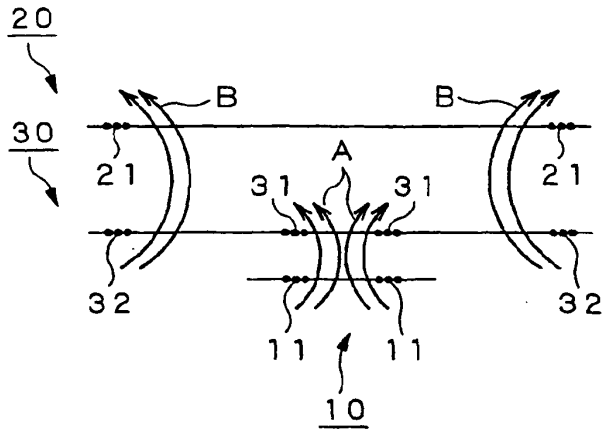

FIG.4

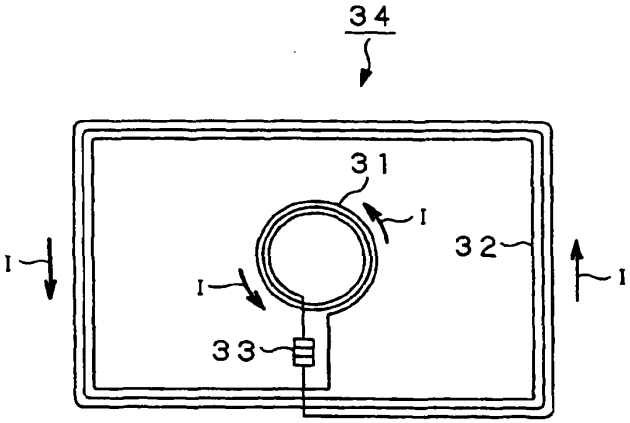

FIG.5

InductEV, Inc.
Exhibit 1031
Page 179

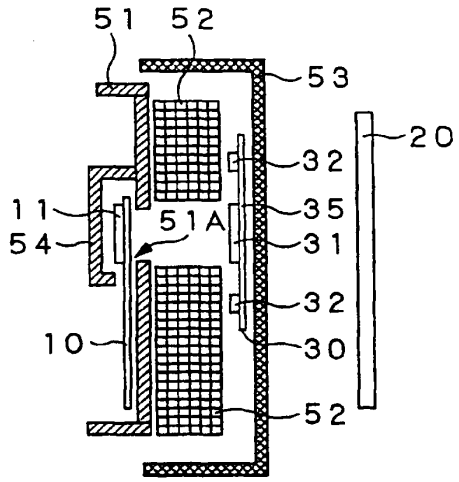

FIG.6

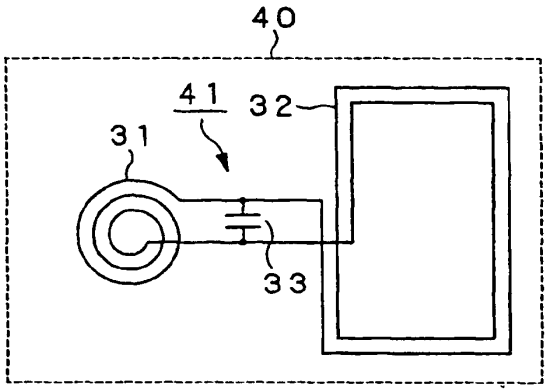

FIG.7

InductEV, Inc.
Exhibit 1031
Page 180

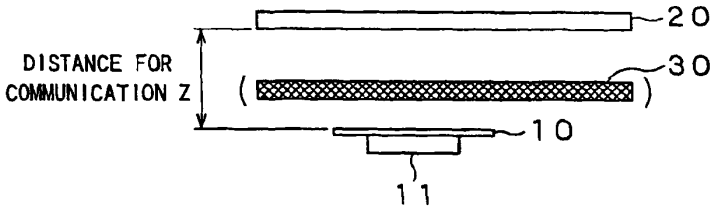

FIG.8

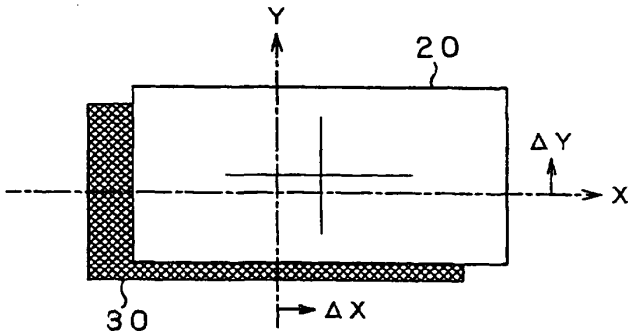

FIG.9

InductEV, Inc.
Exhibit 1031
Page 181

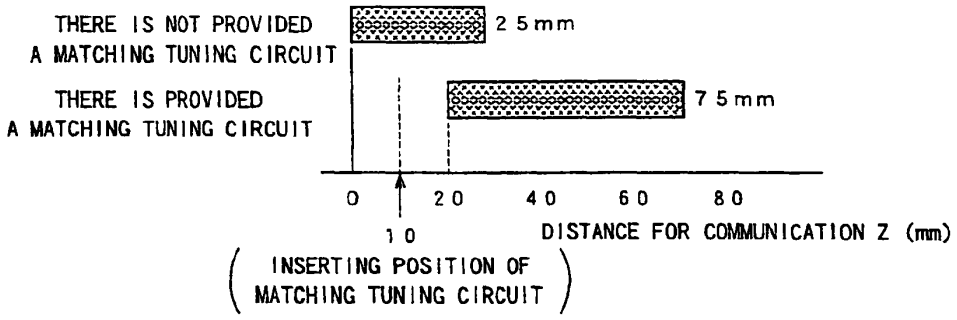

FIG.10

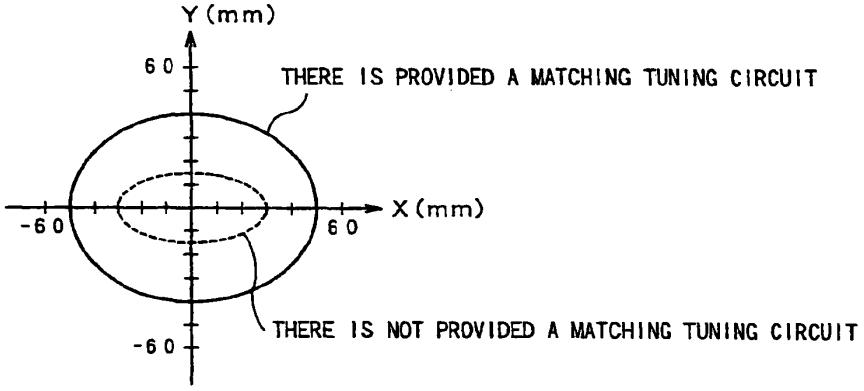

FIG.11

InductEV, Inc.
Exhibit 1031
Page 182

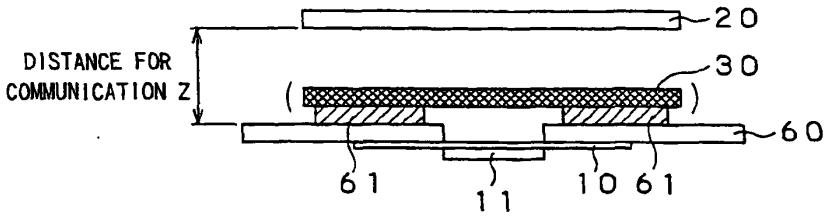

FIG.12

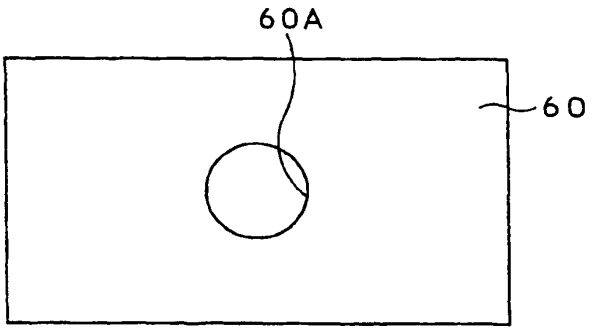

FIG.13

InductEV, Inc.
Exhibit 1031
Page 183

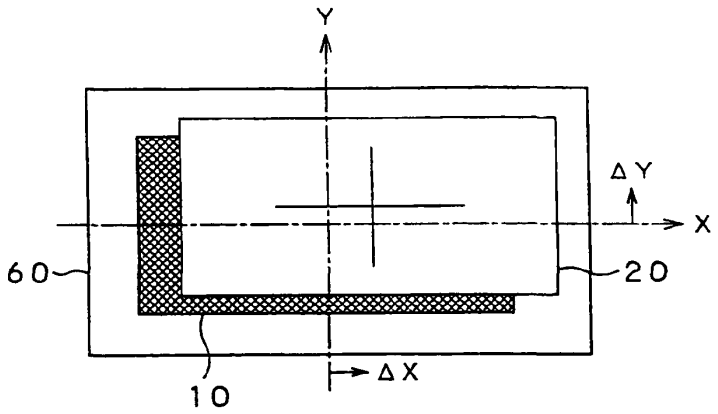

FIG.14

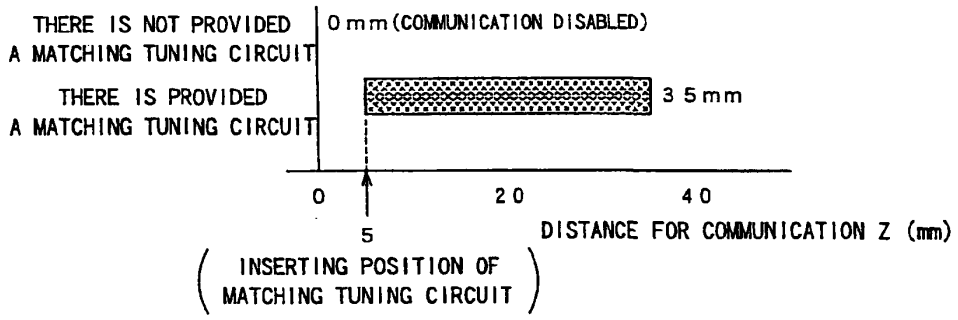

FIG.15

InductEV, Inc.
Exhibit 1031
Page 184

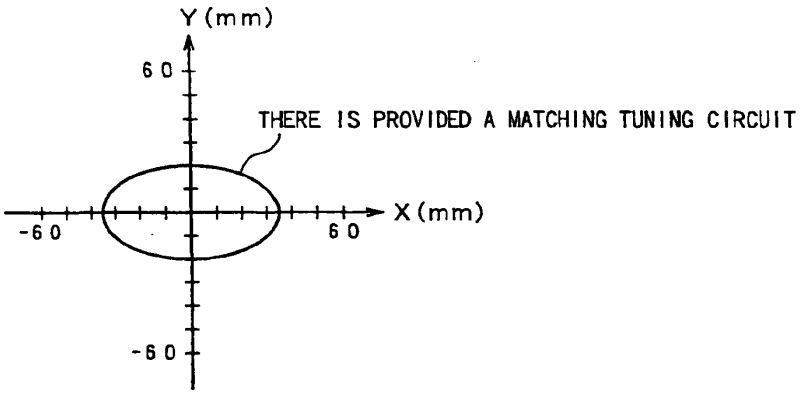

FIG.16

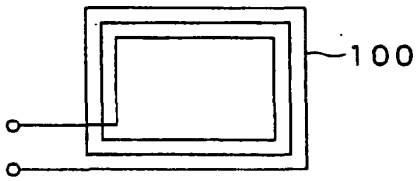

FIG.17A

FIG.17B

InductEV, Inc.
Exhibit 1031
Page 185

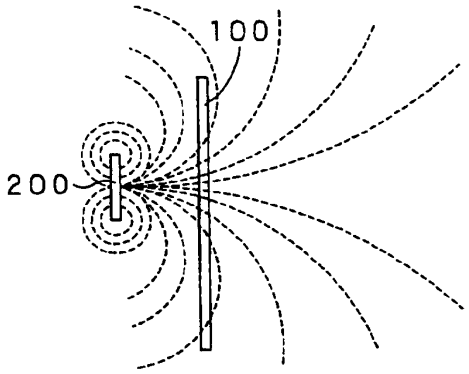

FIG.18

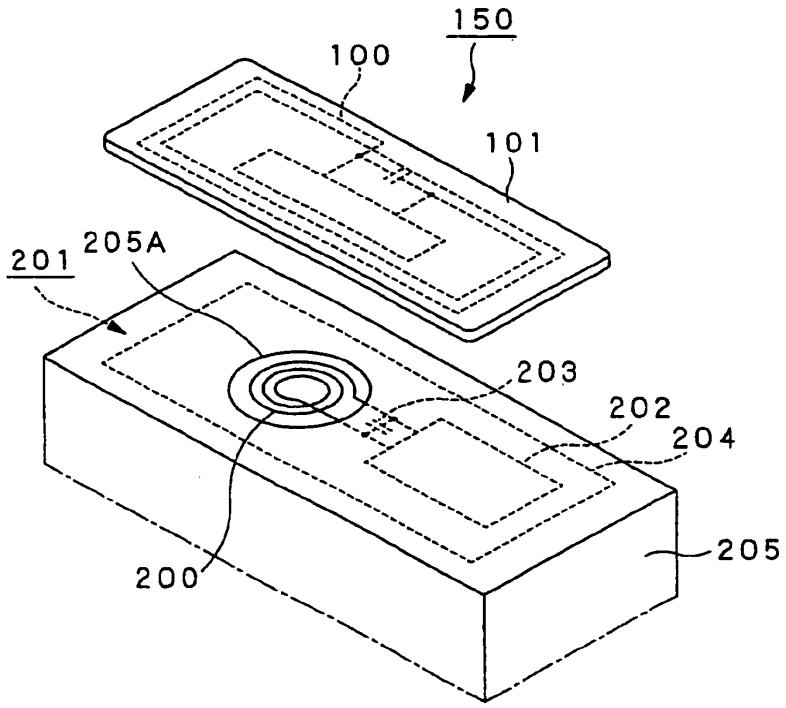

FIG.19

InductEV, Inc.
Exhibit 1031
Page 186

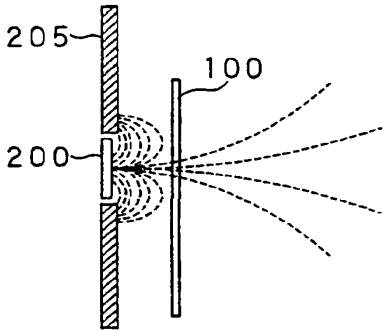

FIG.20

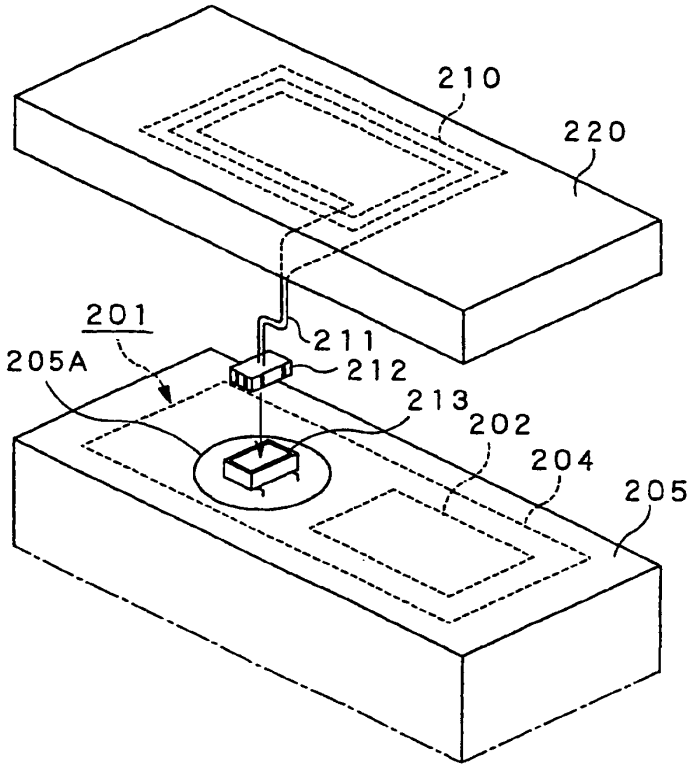

FIG.21

InductEV, Inc.
Exhibit 1031
Page 187

(19) Europäisches Patentamt
European Patent Office
Office européen des brevets

(11) EP 1 521 206 A3

(12) EUROPEAN PATENT APPLICATION

(88) Date of publication A3:
13.12.2006 Bulletin 2006/50

(43) Date of publication A2:
06.04.2005 Bulletin 2005/14

(21) Application number: **04023231.6**

(22) Date of filing: **29.09.2004**

(51) Int Cl.:
G06K 19/07 *(2006.01)*

(84) Designated Contracting States:
AT BE BG CH CY CZ DE DK EE ES FI FR GB GR HU IE IT LI LU MC NL PL PT RO SE SI SK TR
Designated Extension States:
AL HR LT LV MK

(30) Priority: **01.10.2003 JP 2003343616**

(71) Applicant: **SONY CORPORATION**
Tokyo (JP)

(72) Inventors:
- **Kikuchi, Akihiro, c/o Sony Corporation**
  Tokyo (JP)
- **Sawada, Junichi, c/o Sony Engineering Corporation**
  Tokyo (JP)
- **Ishigaki, Masato, c/o Sony Corporation**
  Tokyo (JP)

(74) Representative: **Müller - Hoffmann & Partner Patentanwälte,**
Innere Wiener Strasse 17
81667 München (DE)

(54) Relaying apparatus and communication system

(57) A relaying device for providing optimum communication between a non-contact information medium and an information read/ write device, and a communication system employing the relaying device, in which the adverse effect on communication, brought about by limitations on the mounting site of the information read/ write device may be eliminated. The relaying device is formed by a resonance circuit 34 including a first antenna coil 31, electro-magnetically coupled to an antenna coil 11 of the information read/ write device 10, a second antenna coil 32, connected in series with the first antenna coil 31 and electro-magnetically coupled to an antenna coil 21 of the non-contact information medium 20, and a tuning capacitor 33 connected in series with the first antenna coil 31 and the second antenna coil 32. The first antenna coil 31, second antenna coil 32 and the tuning capacitor 33 making up the resonance circuit 34 is resonated with the same resonance frequency as that of the resonance circuit 13 of the information read/ write device 10 and that of the resonance circuit 23 of the non-contact information medium 20.

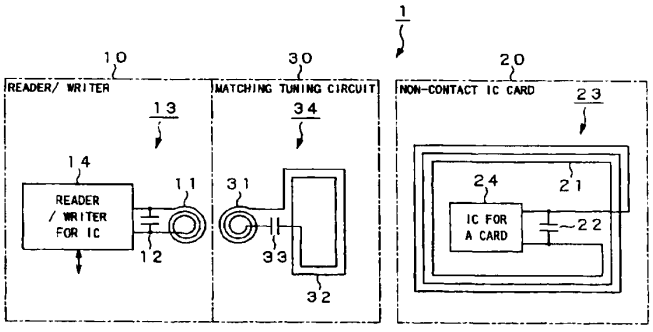

FIG. 1

EP 1 521 206 A3

Printed by Jouve, 75001 PARIS (FR)

InductEV, Inc.
Exhibit 1031
Page 188

European Patent Office

EUROPEAN SEARCH REPORT

Application Number
EP 04 02 3231

DOCUMENTS CONSIDERED TO BE RELEVANT

Category	Citation of document with indication, where appropriate, of relevant passages	Relevant to claim	CLASSIFICATION OF THE APPLICATION (IPC)
X	EP 1 031 939 A1 (TOPPAN PRINTING CO LTD [JP]) 30 August 2000 (2000-08-30) * figures 16B,18B *	1-8	INV. G06K19/07
X	JP 2002 175508 A (DAINIPPON PRINTING CO LTD) 21 June 2002 (2002-06-21) * figure 2 *	1,2,5-8	
P,X	EP 1 385 120 A1 (HITACHI LTD [JP]) 28 January 2004 (2004-01-28) * figure 5 *	3,4	
X	JP 2003 218624 A (FEC INC) 31 July 2003 (2003-07-31) * figure 2 *	1,2,5-8	
X	EP 0 812 752 A2 (TROVAN LTD [US] TROVAN LTD ALGERNON PROMOTIONS INC [PA]) 17 December 1997 (1997-12-17) * figure 6 *	3,4	
X	US 5 305 002 A (HOLODAK GEORGE [US] ET AL) 19 April 1994 (1994-04-19) * figure 2 *	1,2,5-8	TECHNICAL FIELDS SEARCHED (IPC) G06K

The present search report has been drawn up for all claims

Place of search	Date of completion of the search	Examiner
The Hague	3 November 2006	de Ronde, Jan

CATEGORY OF CITED DOCUMENTS

X : particularly relevant if taken alone
Y : particularly relevant if combined with another document of the same category
A : technological background
O : non-written disclosure
P : intermediate document

T : theory or principle underlying the invention
E : earlier patent document, but published on, or after the filing date
D : document cited in the application
L : document cited for other reasons

& : member of the same patent family, corresponding document

EPO FORM 1503 03.82 (P04C01)

InductEV, Inc.
Exhibit 1031
Page 189

Electronic Acknowledgement Receipt

EFS ID:	15553545
Application Number:	13789860
International Application Number:	
Confirmation Number:	4131
Title of Invention:	WIRELESS ENERGY TRANSFER
First Named Inventor/Applicant Name:	Aristeidis Karalis
Customer Number:	26161
Filer:	Marc M. Wefers/Cheryl Forrest
Filer Authorized By:	Marc M. Wefers
Attorney Docket Number:	01997-0358008
Receipt Date:	18-APR-2013
Filing Date:	08-MAR-2013
Time Stamp:	14:25:19
Application Type:	Utility under 35 USC 111(a)

Payment information:

Submitted with Payment	no

File Listing:

Document Number	Document Description	File Name	File Size(Bytes)/ Message Digest	Multi Part /.zip	Pages (if appl.)
1		358008-IDS.pdf	46121 4d682a9abcfc83d21ee55c08762b968a4c6413d6	yes	2

	Multipart Description/PDF files in .zip description				
	Document Description		Start	End	
	Transmittal Letter		1	1	
	Information Disclosure Statement (IDS) Form (SB08)		2	2	
Warnings:					
Information:					
2	Foreign Reference	FA1.pdf	1321042 15e36c49f97e2f58dd88b37dde0320609e5235be	no	26
Warnings:					
Information:					
3	Non Patent Literature	NPL1.pdf	343540 a5456ed1b4d21a28bd436c7697b905ddcd34b1ae	no	7
Warnings:					
Information:					
		Total Files Size (in bytes):	1710703		

This Acknowledgement Receipt evidences receipt on the noted date by the USPTO of the indicated documents, characterized by the applicant, and including page counts, where applicable. It serves as evidence of receipt similar to a Post Card, as described in MPEP 503.

New Applications Under 35 U.S.C. 111
If a new application is being filed and the application includes the necessary components for a filing date (see 37 CFR 1.53(b)-(d) and MPEP 506), a Filing Receipt (37 CFR 1.54) will be issued in due course and the date shown on this Acknowledgement Receipt will establish the filing date of the application.

National Stage of an International Application under 35 U.S.C. 371
If a timely submission to enter the national stage of an international application is compliant with the conditions of 35 U.S.C. 371 and other applicable requirements a Form PCT/DO/EO/903 indicating acceptance of the application as a national stage submission under 35 U.S.C. 371 will be issued in addition to the Filing Receipt, in due course.

New International Application Filed with the USPTO as a Receiving Office
If a new international application is being filed and the international application includes the necessary components for an international filing date (see PCT Article 11 and MPEP 1810), a Notification of the International Application Number and of the International Filing Date (Form PCT/RO/105) will be issued in due course, subject to prescriptions concerning national security, and the date shown on this Acknowledgement Receipt will establish the international filing date of the application.

IN THE UNITED STATES PATENT AND TRADEMARK OFFICE

Applicant	: Aristeidis Karalis et al.	Art Unit	: Unknown
Serial No.	: 13/789,860	Examiner	: Unknown
Filed	: March 8, 2013	Conf. No.	: 4131
Title	: WIRELESS ENERGY TRANSFER		

MAIL STOP AMENDMENT
Commissioner for Patents
P.O. Box 1450
Alexandria, VA 22313-1450

INFORMATION DISCLOSURE STATEMENT

Please consider the references listed on the enclosed PTO-1449 form. Foreign patent documents and non-patent literature are enclosed; cited U.S. patents and patent application publications will be provided on request. A copy of a communication from a foreign patent office in a counterpart application is also enclosed.

This statement is being filed within three months of the filing date of the application or before the receipt of a first Office Action on the merits. Please apply any necessary charges or credits to Deposit Account 06-1050, referencing the above attorney docket number.

Respectfully submitted,

Date: 4/18/13

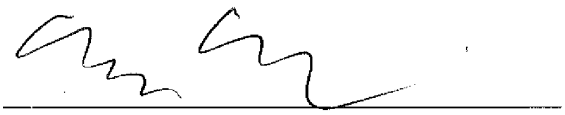

Marc M. Wefers
Reg. No. 56,842

Customer Number 26161
Fish & Richardson P.C.
Telephone: (617) 542-5070
Facsimile: (877) 769-7945

23018130.doc

PTO/AIA/01 (06-12)
Approved for use through 01/31/2014. OMB 0651-0032
U.S. Patent and Trademark Office; U.S. DEPARTMENT OF COMMERCE
Under the Paperwork Reduction Act of 1995, no persons are required to respond to a collection of information unless it displays a valid OMB control number.

DECLARATION (37 CFR 1.63) FOR UTILITY OR DESIGN APPLICATION USING AN APPLICATION DATA SHEET (37 CFR 1.76)

Title of Invention	WIRELESS ENERGY TRANSFER

As the below named inventor, I hereby declare that:

This declaration is directed to:

[ ] The attached application, or

[X] United States application or PCT international application number 13/789,860

filed on March 8, 2013.

The above-identified application was made or authorized to be made by me.

I believe that I am the original inventor or an original joint inventor of a claimed invention in the application.

I hereby acknowledge that any willful false statement made in this declaration is punishable under 18 U.S.C. 1001 by fine or imprisonment of not more than five (5) years, or both.

WARNING:

Petitioner/applicant is cautioned to avoid submitting personal information in documents filed in a patent application that may contribute to identity theft. Personal information such as social security numbers, bank account numbers, or credit card numbers (other than a check or credit card authorization form PTO-2038 submitted for payment purposes) is never required by the USPTO to support a petition or an application. If this type of personal information is included in documents submitted to the USPTO, petitioners/applicants should consider redacting such personal information from the documents before submitting them to the USPTO. Petitioner/applicant is advised that the record of a patent application is available to the public after publication of the application (unless a non-publication request in compliance with 37 CFR 1.213(a) is made in the application) or issuance of a patent. Furthermore, the record from an abandoned application may also be available to the public if the application is referenced in a published application or an issued patent (see 37 CFR 1.14). Checks and credit card authorization forms PTO-2038 submitted for payment purposes are not retained in the application file and therefore are not publicly available.

LEGAL NAME OF INVENTOR

Inventor: Robert Moffatt Date (Optional): April 22, 2013

Signature: Robert Moffatt

Note: An application data sheet (PTO/SB/14 or equivalent), including naming the entire inventive entity, must accompany this form or must have been previously filed. Use an additional PTO/AIA/01 form for each additional inventor.

This collection of information is required by 35 U.S.C. 115 and 37 CFR 1.63. The information is required to obtain or retain a benefit by the public which is to file (and by the USPTO to process) an application. Confidentiality is governed by 35 U.S.C. 122 and 37 CFR 1.11 and 1.14. This collection is estimated to take 1 minute to complete, including gathering, preparing, and submitting the completed application form to the USPTO. Time will vary depending upon the individual case. Any comments on the amount of time you require to complete this form and/or suggestions for reducing this burden, should be sent to the Chief Information Officer, U.S. Patent and Trademark Office, U.S. Department of Commerce, P.O. Box 1450, Alexandria, VA 22313-1450. DO NOT SEND FEES OR COMPLETED FORMS TO THIS ADDRESS. **SEND TO: Commissioner for Patents, P.O. Box 1450, Alexandria, VA 22313-1450.**

If you need assistance in completing the form, call 1-800-PTO-9199 and select option 2.

American LegalNet, Inc.
www.FormsWorkFlow.com

PTO/AIA/01 (06-12)
Approved for use through 01/31/2014. OMB 0651-0032
U.S. Patent and Trademark Office; U.S. DEPARTMENT OF COMMERCE
Under the Paperwork Reduction Act of 1995, no persons are required to respond to a collection of information unless it displays a valid OMB control number.

DECLARATION (37 CFR 1.63) FOR UTILITY OR DESIGN APPLICATION USING AN APPLICATION DATA SHEET (37 CFR 1.76)

Title of Invention	WIRELESS ENERGY TRANSFER

As the below named inventor, I hereby declare that:

This declaration is directed to:

[ ] The attached application, or

[X] United States application or PCT international application number 13/789,860

filed on March 8, 2013.

The above-identified application was made or authorized to be made by me.

I believe that I am the original inventor or an original joint inventor of a claimed invention in the application.

I hereby acknowledge that any willful false statement made in this declaration is punishable under 18 U.S.C. 1001 by fine or imprisonment of not more than five (5) years, or both.

WARNING:

Petitioner/applicant is cautioned to avoid submitting personal information in documents filed in a patent application that may contribute to identity theft. Personal information such as social security numbers, bank account numbers, or credit card numbers (other than a check or credit card authorization form PTO-2038 submitted for payment purposes) is never required by the USPTO to support a petition or an application. If this type of personal information is included in documents submitted to the USPTO, petitioners/applicants should consider redacting such personal information from the documents before submitting them to the USPTO. Petitioner/applicant is advised that the record of a patent application is available to the public after publication of the application (unless a non-publication request in compliance with 37 CFR 1.213(a) is made in the application) or issuance of a patent. Furthermore, the record from an abandoned application may also be available to the public if the application is referenced in a published application or an issued patent (see 37 CFR 1.14). Checks and credit card authorization forms PTO-2038 submitted for payment purposes are not retained in the application file and therefore are not publicly available.

LEGAL NAME OF INVENTOR

Inventor: Andre B. Kurs Date (Optional): 04/10/2013

Signature: _____

Note: An application data sheet (PTO/SB/14 or equivalent), including naming the entire inventive entity, must accompany this form or must have been previously filed. Use an additional PTO/AIA/01 form for each additional inventor.

This collection of information is required by 35 U.S.C. 115 and 37 CFR 1.63. The information is required to obtain or retain a benefit by the public which is to file (and by the USPTO to process) an application. Confidentiality is governed by 35 U.S.C. 122 and 37 CFR 1.11 and 1.14. This collection is estimated to take 1 minute to complete, including gathering, preparing, and submitting the completed application form to the USPTO. Time will vary depending upon the individual case. Any comments on the amount of time you require to complete this form and/or suggestions for reducing this burden, should be sent to the Chief Information Officer, U.S. Patent and Trademark Office, U.S. Department of Commerce, P.O. Box 1450, Alexandria, VA 22313-1450. DO NOT SEND FEES OR COMPLETED FORMS TO THIS ADDRESS. **SEND TO: Commissioner for Patents, P.O. Box 1450, Alexandria, VA 22313-1450.**

If you need assistance in completing the form, call 1-800-PTO-9199 and select option 2.

American LegalNet, Inc.
www.FormsWorkFlow.com

PTO/AIA/01 (06-12)
Approved for use through 01/31/2014. OMB 0651-0032
U.S. Patent and Trademark Office; U.S. DEPARTMENT OF COMMERCE
Under the Paperwork Reduction Act of 1995, no persons are required to respond to a collection of information unless it displays a valid OMB control number.

DECLARATION (37 CFR 1.63) FOR UTILITY OR DESIGN APPLICATION USING AN APPLICATION DATA SHEET (37 CFR 1.76)

Title of Invention	WIRELESS ENERGY TRANSFER

As the below named inventor, I hereby declare that:

This declaration is directed to:

[ ] The attached application, or

[X] United States application or PCT International application number 13/789,860

filed on March 8, 2013.

The above-identified application was made or authorized to be made by me.

I believe that I am the original inventor or an original joint inventor of a claimed invention in the application.

I hereby acknowledge that any willful false statement made in this declaration is punishable under 18 U.S.C. 1001 by fine or imprisonment of not more than five (5) years, or both.

WARNING:

Petitioner/applicant is cautioned to avoid submitting personal information in documents filed in a patent application that may contribute to identity theft. Personal information such as social security numbers, bank account numbers, or credit card numbers (other than a check or credit card authorization form PTO-2038 submitted for payment purposes) is never required by the USPTO to support a petition or an application. If this type of personal information is included in documents submitted to the USPTO, petitioners/applicants should consider redacting such personal information from the documents before submitting them to the USPTO. Petitioner/applicant is advised that the record of a patent application is available to the public after publication of the application (unless a non-publication request in compliance with 37 CFR 1.213(a) is made in the application) or issuance of a patent. Furthermore, the record from an abandoned application may also be available to the public if the application is referenced in a published application or an issued patent (see 37 CFR 1.14). Checks and credit card authorization forms PTO-2038 submitted for payment purposes are not retained in the application file and therefore are not publicly available.

LEGAL NAME OF INVENTOR

Inventor: Aristeidis Karalis Date (Optional): April 4, 2013

Signature: _____

Note: An application data sheet (PTO/SB/14 or equivalent), including naming the entire inventive entity, must accompany this form or must have been previously filed. Use an additional PTO/AIA/01 form for each additional inventor.

This collection of information is required by 35 U.S.C. 115 and 37 CFR 1.63. The information is required to obtain or retain a benefit by the public which is to file (and by the USPTO to process) an application. Confidentiality is governed by 35 U.S.C. 122 and 37 CFR 1.11 and 1.14. This collection is estimated to take 1 minute to complete, including gathering, preparing, and submitting the completed application form to the USPTO. Time will vary depending upon the individual case. Any comments on the amount of time you require to complete this form and/or suggestions for reducing this burden, should be sent to the Chief Information Officer, U.S. Patent and Trademark Office, U.S. Department of Commerce, P.O. Box 1450, Alexandria, VA 22313-1450. DO NOT SEND FEES OR COMPLETED FORMS TO THIS ADDRESS. **SEND TO: Commissioner for Patents, P.O. Box 1450, Alexandria, VA 22313-1450.**

If you need assistance in completing the form, call 1-800-PTO-9199 and select option 2.

American LegalNet, Inc.
www.FormsWorkFlow.com

PTO/AIA/01 (06-12)
Approved for use through 01/31/2014. OMB 0651-0032
U.S. Patent and Trademark Office; U.S. DEPARTMENT OF COMMERCE
Under the Paperwork Reduction Act of 1995, no persons are required to respond to a collection of information unless it displays a valid OMB control number.

DECLARATION (37 CFR 1.63) FOR UTILITY OR DESIGN APPLICATION USING AN APPLICATION DATA SHEET (37 CFR 1.76)

Title of Invention	WIRELESS ENERGY TRANSFER

As the below named inventor, I hereby declare that:

This declaration is directed to:

[ ] The attached application, or

[X] United States application or PCT international application number 13/789,860

filed on March 8, 2013.

The above-identified application was made or authorized to be made by me.

I believe that I am the original inventor or an original joint inventor of a claimed invention in the application.

I hereby acknowledge that any willful false statement made in this declaration is punishable under 18 U.S.C. 1001 by fine or imprisonment of not more than five (5) years, or both.

WARNING:

Petitioner/applicant is cautioned to avoid submitting personal information in documents filed in a patent application that may contribute to identity theft. Personal information such as social security numbers, bank account numbers, or credit card numbers (other than a check or credit card authorization form PTO-2038 submitted for payment purposes) is never required by the USPTO to support a petition or an application. If this type of personal information is included in documents submitted to the USPTO, petitioners/applicants should consider redacting such personal information from the documents before submitting them to the USPTO. Petitioner/applicant is advised that the record of a patent application is available to the public after publication of the application (unless a non-publication request in compliance with 37 CFR 1.213(a) is made in the application) or issuance of a patent. Furthermore, the record from an abandoned application may also be available to the public if the application is referenced in a published application or an issued patent (see 37 CFR 1.14). Checks and credit card authorization forms PTO-2038 submitted for payment purposes are not retained in the application file and therefore are not publicly available.

LEGAL NAME OF INVENTOR

Inventor: John D. Joannopoulos Date (Optional) : _____

Signature: _____

Note: An application data sheet (PTO/SB/14 or equivalent), including naming the entire inventive entity, must accompany this form or must have been previously filed. Use an additional PTO/AIA/01 form for each additional inventor.

This collection of information is required by 35 U.S.C. 115 and 37 CFR 1.63. The information is required to obtain or retain a benefit by the public which is to file (and by the USPTO to process) an application. Confidentiality is governed by 35 U.S.C. 122 and 37 CFR 1.11 and 1.14. This collection is estimated to take 1 minute to complete, including gathering, preparing, and submitting the completed application form to the USPTO. Time will vary depending upon the individual case. Any comments on the amount of time you require to complete this form and/or suggestions for reducing this burden, should be sent to the Chief Information Officer, U.S. Patent and Trademark Office, U.S. Department of Commerce, P.O. Box 1450, Alexandria, VA 22313-1450. DO NOT SEND FEES OR COMPLETED FORMS TO THIS ADDRESS. **SEND TO: Commissioner for Patents, P.O. Box 1450, Alexandria, VA 22313-1450.**

If you need assistance in completing the form, call 1-800-PTO-9199 and select option 2.

American LegalNet, Inc.
www.FormsWorkFlow.com

PTO/AIA/01 (06-12)
Approved for use through 01/31/2014. OMB 0651-0032
U.S. Patent and Trademark Office; U.S. DEPARTMENT OF COMMERCE
Under the Paperwork Reduction Act of 1995, no persons are required to respond to a collection of information unless it displays a valid OMB control number.

DECLARATION (37 CFR 1.63) FOR UTILITY OR DESIGN APPLICATION USING AN APPLICATION DATA SHEET (37 CFR 1.76)

Title of Invention	WIRELESS ENERGY TRANSFER

As the below named inventor, I hereby declare that:

This declaration is directed to:

[ ] The attached application, or

[X] United States application or PCT international application number 13/789,860

filed on March 8, 2013.

The above-identified application was made or authorized to be made by me.

I believe that I am the original inventor or an original joint inventor of a claimed invention in the application.

I hereby acknowledge that any willful false statement made in this declaration is punishable under 18 U.S.C. 1001 by fine or imprisonment of not more than five (5) years, or both.

WARNING:

Petitioner/applicant is cautioned to avoid submitting personal information in documents filed in a patent application that may contribute to identity theft. Personal information such as social security numbers, bank account numbers, or credit card numbers (other than a check or credit card authorization form PTO-2038 submitted for payment purposes) is never required by the USPTO to support a petition or an application. If this type of personal information is included in documents submitted to the USPTO, petitioners/applicants should consider redacting such personal information from the documents before submitting them to the USPTO. Petitioner/applicant is advised that the record of a patent application is available to the public after publication of the application (unless a non-publication request in compliance with 37 CFR 1.213(a) is made in the application) or issuance of a patent. Furthermore, the record from an abandoned application may also be available to the public if the application is referenced in a published application or an issued patent (see 37 CFR 1.14). Checks and credit card authorization forms PTO-2038 submitted for payment purposes are not retained in the application file and therefore are not publicly available.

LEGAL NAME OF INVENTOR

Inventor: Peter H. Fisher Date (Optional): Mar 8, 2013

Signature: Peter H. Fisher

Note: An application data sheet (PTO/SB/14 or equivalent), including naming the entire inventive entity, must accompany this form or must have been previously filed. Use an additional PTO/AIA/01 form for each additional inventor.

This collection of information is required by 35 U.S.C. 115 and 37 CFR 1.63. The information is required to obtain or retain a benefit by the public which is to file (and by the USPTO to process) an application. Confidentiality is governed by 35 U.S.C. 122 and 37 CFR 1.11 and 1.14. This collection is estimated to take 1 minute to complete, including gathering, preparing, and submitting the completed application form to the USPTO. Time will vary depending upon the individual case. Any comments on the amount of time you require to complete this form and/or suggestions for reducing this burden, should be sent to the Chief Information Officer, U.S. Patent and Trademark Office, U.S. Department of Commerce, P.O. Box 1450, Alexandria, VA 22313-1450. DO NOT SEND FEES OR COMPLETED FORMS TO THIS ADDRESS. **SEND TO: Commissioner for Patents, P.O. Box 1450, Alexandria, VA 22313-1450.**

If you need assistance in completing the form, call 1-800-PTO-9199 and select option 2.

American LegalNet, Inc.
www.FormsWorkFlow.com

PTO/AIA/01 (06-12)
Approved for use through 01/31/2014. OMB 0651-0032
U.S. Patent and Trademark Office; U.S. DEPARTMENT OF COMMERCE
Under the Paperwork Reduction Act of 1995, no persons are required to respond to a collection of information unless it displays a valid OMB control number.

DECLARATION (37 CFR 1.63) FOR UTILITY OR DESIGN APPLICATION USING AN APPLICATION DATA SHEET (37 CFR 1.76)

Title of Invention	WIRELESS ENERGY TRANSFER

As the below named inventor, I hereby declare that:

This declaration is directed to:

[ ] The attached application, or

[X] United States application or PCT international application number 13/789,860

filed on March 8, 2013.

The above-identified application was made or authorized to be made by me.

I believe that I am the original inventor or an original joint inventor of a claimed invention in the application.

I hereby acknowledge that any willful false statement made in this declaration is punishable under 18 U.S.C. 1001 by fine or imprisonment of not more than five (5) years, or both.

WARNING:

Petitioner/applicant is cautioned to avoid submitting personal information in documents filed in a patent application that may contribute to identity theft. Personal information such as social security numbers, bank account numbers, or credit card numbers (other than a check or credit card authorization form PTO-2038 submitted for payment purposes) is never required by the USPTO to support a petition or an application. If this type of personal information is included in documents submitted to the USPTO, petitioners/applicants should consider redacting such personal information from the documents before submitting them to the USPTO. Petitioner/applicant is advised that the record of a patent application is available to the public after publication of the application (unless a non-publication request in compliance with 37 CFR 1.213(a) is made in the application) or issuance of a patent. Furthermore, the record from an abandoned application may also be available to the public if the application is referenced in a published application or an issued patent (see 37 CFR 1.14). Checks and credit card authorization forms PTO-2038 submitted for payment purposes are not retained in the application file and therefore are not publicly available.

LEGAL NAME OF INVENTOR

Inventor: Marin Soljacic Date (Optional) : _____

Signature: Marin Soljačić

Note: An application data sheet (PTO/SB/14 or equivalent), including naming the entire inventive entity, must accompany this form or must have been previously filed. Use an additional PTO/AIA/01 form for each additional inventor.

This collection of information is required by 35 U.S.C. 115 and 37 CFR 1.63. The information is required to obtain or retain a benefit by the public which is to file (and by the USPTO to process) an application. Confidentiality is governed by 35 U.S.C. 122 and 37 CFR 1.11 and 1.14. This collection is estimated to take 1 minute to complete, including gathering, preparing, and submitting the completed application form to the USPTO. Time will vary depending upon the individual case. Any comments on the amount of time you require to complete this form and/or suggestions for reducing this burden, should be sent to the Chief Information Officer, U.S. Patent and Trademark Office, U.S. Department of Commerce, P.O. Box 1450, Alexandria, VA 22313-1450. DO NOT SEND FEES OR COMPLETED FORMS TO THIS ADDRESS. **SEND TO: Commissioner for Patents, P.O. Box 1450, Alexandria, VA 22313-1450.**

If you need assistance in completing the form, call 1-800-PTO-9199 and select option 2.

American LegalNet, Inc.
www.FormsWorkFlow.com

Electronic Acknowledgement Receipt

EFS ID:	15631676
Application Number:	13789860
International Application Number:	
Confirmation Number:	4131
Title of Invention:	WIRELESS ENERGY TRANSFER
First Named Inventor/Applicant Name:	Aristeidis Karalis
Customer Number:	26161
Filer:	Marc M. Wefers/Cheryl Forrest
Filer Authorized By:	Marc M. Wefers
Attorney Docket Number:	01997-0358008
Receipt Date:	29-APR-2013
Filing Date:	08-MAR-2013
Time Stamp:	09:35:58
Application Type:	Utility under 35 USC 111(a)

Payment information:

Submitted with Payment	no

File Listing:

Document Number	Document Description	File Name	File Size(Bytes)/ Message Digest	Multi Part /.zip	Pages (if appl.)
1	Oath or Declaration filed	ExecutedDeclaration.pdf	1291653 e1227e64c3b9e7689c68a96401e1c6dd4aed7326	no	6

Warnings:	
Information:	

Total Files Size (in bytes):	1291653

This Acknowledgement Receipt evidences receipt on the noted date by the USPTO of the indicated documents, characterized by the applicant, and including page counts, where applicable. It serves as evidence of receipt similar to a Post Card, as described in MPEP 503.

New Applications Under 35 U.S.C. 111
If a new application is being filed and the application includes the necessary components for a filing date (see 37 CFR 1.53(b)-(d) and MPEP 506), a Filing Receipt (37 CFR 1.54) will be issued in due course and the date shown on this Acknowledgement Receipt will establish the filing date of the application.

National Stage of an International Application under 35 U.S.C. 371
If a timely submission to enter the national stage of an international application is compliant with the conditions of 35 U.S.C. 371 and other applicable requirements a Form PCT/DO/EO/903 indicating acceptance of the application as a national stage submission under 35 U.S.C. 371 will be issued in addition to the Filing Receipt, in due course.

New International Application Filed with the USPTO as a Receiving Office
If a new international application is being filed and the international application includes the necessary components for an international filing date (see PCT Article 11 and MPEP 1810), a Notification of the International Application Number and of the International Filing Date (Form PCT/RO/105) will be issued in due course, subject to prescriptions concerning national security, and the date shown on this Acknowledgement Receipt will establish the international filing date of the application.

UNITED STATES PATENT AND TRADEMARK OFFICE

UNITED STATES DEPARTMENT OF COMMERCE
United States Patent and Trademark Office
Address: COMMISSIONER FOR PATENTS
P.O. Box 1450
Alexandria, Virginia 22313-1450
www.uspto.gov

APPLICATION NUMBER	FILING OR 371(C) DATE	FIRST NAMED APPLICANT	ATTY. DOCKET NO./TITLE
13/789,860	03/08/2013	Aristeidis Karalis	01997-0358008

CONFIRMATION NO. 4131

26161
FISH & RICHARDSON P.C. (BO)
P.O. BOX 1022
MINNEAPOLIS, MN 55440-1022

POA ACCEPTANCE LETTER

OC000000060674260

Date Mailed: 04/30/2013

NOTICE OF ACCEPTANCE OF POWER OF ATTORNEY

This is in response to the Power of Attorney filed 04/11/2013.

The Power of Attorney in this application is accepted. Correspondence in this application will be mailed to the above address as provided by 37 CFR 1.33.

/agizaw/

Office of Data Management, Application Assistance Unit (571) 272-4000, or (571) 272-4200, or 1-888-786-0101

UNITED STATES PATENT AND TRADEMARK OFFICE

UNITED STATES DEPARTMENT OF COMMERCE
United States Patent and Trademark Office
Address: COMMISSIONER FOR PATENTS
P.O. Box 1450
Alexandria, Virginia 22313-1450
www.uspto.gov

APPLICATION NUMBER	FILING OR 371(C) DATE	FIRST NAMED APPLICANT	ATTY. DOCKET NO./TITLE
13/789,860	03/08/2013	Aristeidis Karalis	01997-0358008

CONFIRMATION NO. 4131

26161
FISH & RICHARDSON P.C. (BO)
P.O. BOX 1022
MINNEAPOLIS, MN 55440-1022

NOTICE

OC000000060674249

Date Mailed: 04/30/2013

INFORMATIONAL NOTICE TO APPLICANT

Applicant is notified that the above-identified application contains the deficiencies noted below. No period for reply is set forth in this notice for correction of these deficiencies. However, if a deficiency relates to the inventor's oath or declaration, the applicant must file an oath or declaration in compliance with 37 CFR 1.63, or a substitute statement in compliance with 37 CFR 1.64, executed by or with respect to each actual inventor no later than the expiration of the time period set in the "Notice of Allowability" to avoid abandonment. See 37 CFR 1.53(f).

The item(s) indicated below are also required and should be submitted with any reply to this notice to avoid further processing delays.

- A properly executed inventor's oath or declaration has not been received for the following inventor(s):
  All
  Applicant may submit the inventor's oath or declaration at any time before the Notice of Allowance and Fee(s) Due, PTOL-85, is mailed.

UNITED STATES PATENT AND TRADEMARK OFFICE

UNITED STATES DEPARTMENT OF COMMERCE
United States Patent and Trademark Office
Address: COMMISSIONER FOR PATENTS
P.O. Box 1450
Alexandria, Virginia 22313-1450
www.uspto.gov

APPLICATION NUMBER	FILING or 371(c) DATE	GRP ART UNIT	FIL FEE REC'D	ATTY.DOCKET.NO	TOT CLAIMS	IND CLAIMS
13/789,860	03/08/2013	2836	3140	01997-0358008	18	10

CONFIRMATION NO. 4131

REPLACEMENT FILING RECEIPT

26161
FISH & RICHARDSON P.C. (BO)
P.O. BOX 1022
MINNEAPOLIS, MN 55440-1022

Date Mailed: 04/30/2013

Receipt is acknowledged of this non-provisional patent application. The application will be taken up for examination in due course. Applicant will be notified as to the results of the examination. Any correspondence concerning the application must include the following identification information: the U.S. APPLICATION NUMBER, FILING DATE, NAME OF APPLICANT, and TITLE OF INVENTION. Fees transmitted by check or draft are subject to collection. Please verify the accuracy of the data presented on this receipt. **If an error is noted on this Filing Receipt, please submit a written request for a Filing Receipt Correction. Please provide a copy of this Filing Receipt with the changes noted thereon. If you received a "Notice to File Missing Parts" for this application, please submit any corrections to this Filing Receipt with your reply to the Notice. When the USPTO processes the reply to the Notice, the USPTO will generate another Filing Receipt incorporating the requested corrections**

Inventor(s)

Aristeidis Karalis, Boston, MA;
Andre B. Kurs, Chestnut Hill, MA;
Robert Moffatt, Reston, VA;
John D. Joannopoulos, Belmont, MA;
Peter H. Fisher, Cambridge, MA;
Marin Soljacic, Belmont, MA;

Applicant(s)

Massachusetts Institute of Technology, Cambridge, MA

Assignment For Published Patent Application

Massachusetts Institute of Technology, Cambridge, MA

Power of Attorney:

Timothy French--30175
John Hayden--37640
Faustino Lichauco--41942
Lynda Crews--43567
Elliott Mason III--56569
Marc Wefers--56842

Domestic Priority data as claimed by applicant

This application is a CON of 13/477,459 05/22/2012
which is a CON of 13/036,177 02/28/2011 ABN
which is a CON of 12/437,641 05/08/2009 PAT 8097983 *
which is a CON of 12/055,963 03/26/2008 PAT 7825543 *
which is a CIP of 11/481,077 07/05/2006 PAT 7741734 *
which claims benefit of 60/698,442 07/12/2005
and said 12/055,963 03/26/2008

claims benefit of 60/908,383 03/27/2007
and claims benefit of 60/908,666 03/28/2007
and is a CIP of PCT/US2007/070892 06/11/2007
(*)Data provided by applicant is not consistent with PTO records.

Foreign Applications for which priority is claimed (You may be eligible to benefit from the **Patent Prosecution Highway** program at the USPTO. Please see http://www.uspto.gov for more information.) - None.
Foreign application information must be provided in an Application Data Sheet in order to constitute a claim to foreign priority. See 37 CFR 1.55 and 1.76.

Permission to Access - A proper **Authorization to Permit Access to Application by Participating Offices** (PTO/SB/39 or its equivalent) has been received by the USPTO.

If Required, Foreign Filing License Granted: 04/01/2013

The country code and number of your priority application, to be used for filing abroad under the Paris Convention, is **US 13/789,860**

Projected Publication Date: 07/18/2013

Non-Publication Request: No

Early Publication Request: No

Title

WIRELESS ENERGY TRANSFER

Preliminary Class

307

Statement under 37 CFR 1.55 or 1.78 for AIA (First Inventor to File) Transition Applications:

PROTECTING YOUR INVENTION OUTSIDE THE UNITED STATES

Since the rights granted by a U.S. patent extend only throughout the territory of the United States and have no effect in a foreign country, an inventor who wishes patent protection in another country must apply for a patent in a specific country or in regional patent offices. Applicants may wish to consider the filing of an international application under the Patent Cooperation Treaty (PCT). An international (PCT) application generally has the same effect as a regular national patent application in each PCT-member country. The PCT process **simplifies** the filing of patent applications on the same invention in member countries, but **does not result** in a grant of "an international patent" and does not eliminate the need of applicants to file additional documents and fees in countries where patent protection is desired.

Almost every country has its own patent law, and a person desiring a patent in a particular country must make an application for patent in that country in accordance with its particular laws. Since the laws of many countries differ in various respects from the patent law of the United States, applicants are advised to seek guidance from specific foreign countries to ensure that patent rights are not lost prematurely.

Applicants also are advised that in the case of inventions made in the United States, the Director of the USPTO must issue a license before applicants can apply for a patent in a foreign country. The filing of a U.S. patent application serves as a request for a foreign filing license. The application's filing receipt contains further information and guidance as to the status of applicant's license for foreign filing.

Applicants may wish to consult the USPTO booklet, "General Information Concerning Patents" (specifically, the section entitled "Treaties and Foreign Patents") for more information on timeframes and deadlines for filing foreign patent applications. The guide is available either by contacting the USPTO Contact Center at 800-786-9199, or it can be viewed on the USPTO website at http://www.uspto.gov/web/offices/pac/doc/general/index.html.

For information on preventing theft of your intellectual property (patents, trademarks and copyrights), you may wish to consult the U.S. Government website, http://www.stopfakes.gov. Part of a Department of Commerce initiative, this website includes self-help "toolkits" giving innovators guidance on how to protect intellectual property in specific countries such as China, Korea and Mexico. For questions regarding patent enforcement issues, applicants may call the U.S. Government hotline at 1-866-999-HALT (1-866-999-4158).

LICENSE FOR FOREIGN FILING UNDER

Title 35, United States Code, Section 184

Title 37, Code of Federal Regulations, 5.11 & 5.15

GRANTED

The applicant has been granted a license under 35 U.S.C. 184, if the phrase "IF REQUIRED, FOREIGN FILING LICENSE GRANTED" followed by a date appears on this form. Such licenses are issued in all applications where the conditions for issuance of a license have been met, regardless of whether or not a license may be required as set forth in 37 CFR 5.15. The scope and limitations of this license are set forth in 37 CFR 5.15(a) unless an earlier license has been issued under 37 CFR 5.15(b). The license is subject to revocation upon written notification. The date indicated is the effective date of the license, unless an earlier license of similar scope has been granted under 37 CFR 5.13 or 5.14.

This license is to be retained by the licensee and may be used at any time on or after the effective date thereof unless it is revoked. This license is automatically transferred to any related applications(s) filed under 37 CFR 1.53(d). This license is not retroactive.

The grant of a license does not in any way lessen the responsibility of a licensee for the security of the subject matter as imposed by any Government contract or the provisions of existing laws relating to espionage and the national security or the export of technical data. Licensees should apprise themselves of current regulations especially with respect to certain countries, of other agencies, particularly the Office of Defense Trade Controls, Department of State (with respect to Arms, Munitions and Implements of War (22 CFR 121-128)); the Bureau of Industry and Security, Department of Commerce (15 CFR parts 730-774); the Office of Foreign AssetsControl, Department of Treasury (31 CFR Parts 500+) and the Department of Energy.

NOT GRANTED

No license under 35 U.S.C. 184 has been granted at this time, if the phrase "IF REQUIRED, FOREIGN FILING LICENSE GRANTED" DOES NOT appear on this form. Applicant may still petition for a license under 37 CFR 5.12, if a license is desired before the expiration of 6 months from the filing date of the application. If 6 months has lapsed from the filing date of this application and the licensee has not received any indication of a secrecy order under 35 U.S.C. 181, the licensee may foreign file the application pursuant to 37 CFR 5.15(b).

SelectUSA

The United States represents the largest, most dynamic marketplace in the world and is an unparalleled location for business investment, innovation, and commercialization of new technologies. The U.S. offers tremendous resources and advantages for those who invest and manufacture goods here. Through SelectUSA, our nation works to promote and facilitate business investment. SelectUSA provides information assistance to the international investor community; serves as an ombudsman for existing and potential investors; advocates on behalf of U.S. cities, states, and regions competing for global investment; and counsels U.S. economic development organizations on investment attraction best practices. To learn more about why the United States is the best country in the world to develop technology, manufacture products, deliver services, and grow your business, visit http://www.SelectUSA.gov or call +1-202-482-6800.

Substitute Disclosure Form	U.S. Department of Commerce Patent and Trademark Office	Attorney Docket No. 01997-0358008	Application No. 13/789,860
Information Disclosure Statement by Applicant (Use several sheets if necessary) (37 CFR §1.98(b))		Applicant Aristeidis Karalis et al.	
		Filing Date March 8, 2013	Group Art Unit 2836

U.S. Patent Documents							
Examiner Initial	Desig. ID	Document Number	Publication Date	Patentee	Class	Subclass	Filing Date If Appropriate
	1						

Foreign Patent Documents or Published Foreign Patent Applications								
Examiner Initial	Desig. ID	Document Number	Publication Date	Country or Patent Office	Class	Subclass	Translation Yes	Translation No
	2	JP 11-75329	3/16/1999	Japan	H02J	17/00	Abstract and Machine Translation	
	3	JP 2003-179526	6/27/2003	Japan	H04B	5/02	Abstract and Machine Translation	
	4	JP 2004-166459	6/10/2004	Japan	H02J	7/00	Abstract and Machine Translation	
	5	JP 2004-201458	7/15/2004	Japan	H02 M	3/28	Abstract and Machine Translation	
	6	JP 2005-57444	3/3/2005	Japan	H01Q	7/09	Abstract and Machine Translation	
	7							

Other Documents (include Author, Title, Date, and Place of Publication)		
Examiner Initial	Desig. ID	Document
	8	Klaus Finkenzeller, "RFID Handbook (2nd Edition)", The Nikkan Kogyo Shimbun, Ltd., pp. 19, 20, 38, 39, 43, 44, 62, 63, 67, 68, 87, 88, 291, 292 (Published on May 31, 2004)
	9	Copy of Translation of Information Statement by Third Party submitted to the Japanese Patent Office for Japanese Application No. 2011-83009, translation received on May 15, 2013
	10	Copy of Submission of Publication to the Japanese Patent Office for Japanese Application No. 2011-256,729, translation received on May 2, 2013
	11	Copy of Submission of Publication to the Japanese Patent Office for Japanese Application No. 2011-509,705, translation received on May 2, 2013
	12	

Examiner Signature	Date Considered
EXAMINER: Initials citation considered. Draw line through citation if not in conformance and not considered. Include copy of this form with next communication to applicant.	

Substitute Disclosure Form

No documents available for this priority number.

Espacenet

Bibliographic data: JPH11175329 (A) — 1999-03-16

NON-CONTACT TYPE IC CARD SYSTEM

Inventor(s): MAKUUCHI MASAMI; HAYASHI YOSHIHIKO; SUGA TAKU; KAMISAKA KOICHI; YOSHINO RYOZO ± (MAKUUCHI MASAMI, ; HAYASHI YOSHIHIKO, ; SUGA TAKU, ; KAMISAKA KOICHI, ; YOSHINO RYOZO)

Applicant(s): HITACHI LTD ± (HITACHI LTD)

Classification: **- international:** ***G06K17/00; H02J17/00; H04B5/00;*** (IPC1-7): G06K17/00; H02J17/00; H04B5/00

- cooperative:

Application number: JP19970233611 19970829

Priority number(s): JP19970233611 19970829

Abstract of JPH11175329 (A)

PROBLEM TO BE SOLVED: To maximize the power transmission efficiency from a reader or writer device to a proximity wireless card, by setting the respective Q values of a resonance circuit of the reader or writer device and the resonance circuit of an IC card using the Q of the whole communication route. SOLUTION: A reader and/or writer unit 1 constitutes a resonance circuit using a capacitor 104, an antenna drive impedance 120 and an R/W antenna coil 101. A wireless card 2 constitutes a resonance circuit using a card antenna coil 201, a capacitor, and a resistor 220. In such a system, the antenna drive impedance 120 is set so as to maximize the reception efficiency at the proximity wireless card 2 in the target communication distance, and the respective Qs of the resonance circuits are set so as to obtain the necessary bandwidth to secure the sufficient signal level to the target communication speed.

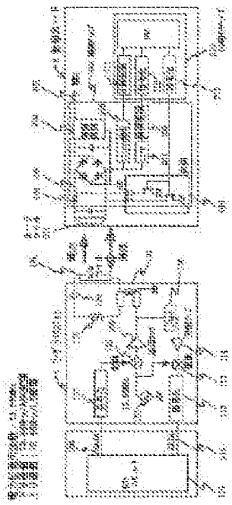

Last updated: 13.03.2013 Worldwide Database 5.8.8.8; 92p

InductEV, Inc.
Exhibit 1031
Page 208

(19)日本国特許庁（ＪＰ）　(12)**公開特許公報（Ａ）**　(11)特許出願公開番号

特開平11－75329

(43)公開日　平成11年(1999)３月16日

(51)Int.Cl.[6]	識別記号	ＦＩ	
Ｈ０２Ｊ　17/00		Ｈ０２Ｊ　17/00	Ｂ
Ｇ０６Ｋ　17/00		Ｇ０６Ｋ　17/00	Ｆ
Ｈ０４Ｂ　5/00		Ｈ０４Ｂ　5/00	Ｚ

審査請求　未請求　請求項の数５　ＯＬ　（全 10 頁）

(21)出願番号　特願平9－233611

(22)出願日　平成９年(1997)８月29日

(71)出願人　000005108
株式会社日立製作所
東京都千代田区神田駿河台四丁目６番地

(72)発明者　幕内　雅巳
神奈川県横浜市戸塚区吉田町292番地株式会社日立製作所生産技術研究所内

(72)発明者　林　良彦
神奈川県横浜市戸塚区吉田町292番地株式会社日立製作所生産技術研究所内

(72)発明者　須賀　卓
神奈川県横浜市戸塚区吉田町292番地株式会社日立製作所生産技術研究所内

(74)代理人　弁理士　小川　勝男

最終頁に続く

(54)【発明の名称】　非接触ＩＣカードシステム

(57)【要約】
【課題】非接触式ＩＣカードシステムにおいて、ＩＣカードおよびＩＣカードのリーダまたは／およびライタそれぞれの共振回路の単体のＱを設定することにより、目標とする通信速度に対して十分な帯域幅を得ることができ、かつＩＣカードでの受信効率を最大にする。
【解決手段】ＩＣカードおよびＩＣカードのリーダまたは／およびライタに，それぞれ共振回路３、４を配設する。目標とする通信距離において該リーダまたは／およびライタのアンテナコイルから該ＩＣカードを見込んだインピーダンスＺｃと該アンテナコイルの駆動インピーダンスＲｓを等しくし、かつ該ＩＣカードと該リーダまたは／およびライタにより構成される伝送経路の全体のＱを通信帯域幅と電力伝送周波数との比に等しくするように該共振回路３および４のＱを設定する。

図２

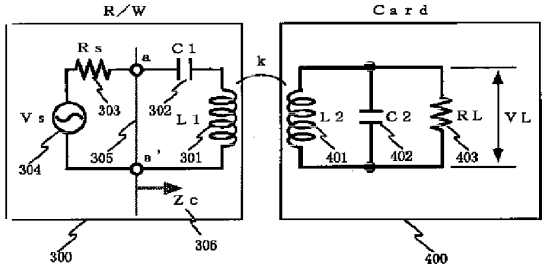

InductEV, Inc.
Exhibit 1031
Page 209

【特許請求の範囲】
【請求項１】リーダまたは／およびライタ装置とＩＣカードとの間で電力または／および信号の伝送を非接触で行い、該リーダまたは／およびライタ装置と該ＩＣカードとがそれぞれ該電力または／および該信号を伝送するアンテナコイルと該電力を伝送する電力伝送周波数に同調するように設定した容量と該アンテナコイルの駆動インピーダンスからなる共振回路を備えた非接触ＩＣカードシステムであって、
該リーダまたは／およびライタ装置と該ＩＣカードからなる通信経路全体のＱを用いることで、該リーダまたは／およびライタ装置の有する共振回路と該ＩＣカードの有する共振回路のそれぞれのQを設定したことを特徴とする非接触ＩＣカードシステム。
【請求項２】前記ＩＣカードに設けた共振回路のＱを３～４２の範囲に設定し、前記リーダまたは／およびライタ装置に設けた共振回路のＱを３～４０の範囲に設定したことを特徴とする請求項１記載の非接触ＩＣカードシステム。
【請求項３】前記通信経路全体のＱを前記ICカードに設けた共振回路と前記リーダまたは／およびライタ装置に設けた共振回路とのインピーダンスをほぼ等しくなるようにして算出したことを特徴とする請求項１又は請求項２記載の非接触ＩＣカードシステム。
【請求項４】リーダまたは／およびライタ装置とＩＣカードとの間で電力または／および信号の伝送を非接触で行う非接触ＩＣカードシステムであって、
該リーダまたは／およびライタ装置のアンテナ駆動インピーダンスを該リーダまたは／およびライタ装置のアンテナから該ＩＣカードを見込んだインピーダンスにほぼ等しく設定して導き出した伝送経路全体のQの特性から、該信号の伝送速度に対して所望の帯域幅を得ることが可能となるQ３を算出し、該算出したQ３と該リーダまたは／およびライタ装置から該ＩＣカードへの電力伝送効率を最大となる該リーダまたは／およびライタ装置のＱ１と該ＩＣカードのQ２との関係とを用いることで、該リーダまたは／およびライタ装置と該ＩＣカードの有する共振回路のそれぞれのＱ１、Ｑ２を設定したことを特徴とする非接触ＩＣカードシステム。
【請求項５】リーダまたは／およびライタ装置とＩＣカードとの間で電力または／および信号の伝送を非接触で行う非接触ＩＣカードシステムであって、
該リーダまたは／およびライタ装置と該ＩＣカードからなる通信経路全体のＱを用いることで、該リーダまたは／およびライタ装置と該ＩＣカードそれぞれのQを設定したことを特徴とする非接触ＩＣカードシステム。
【発明の詳細な説明】
【０００１】
【発明の属する技術分野】本発明は、例えばキャッシュディスペンサ、電子マネー、自動改札システム、入退室管理システム、公衆電話器等におけるキャッシュカード、クレジットカード、乗車券、定期券、回数券、管理カード、ＩＤカード、免許証、テレホンカード等の非接触ＩＣカードとリーダまたは／およびライタ装置との間において近接無線動作用電力伝送及び通信を行う非接触ＩＣカードシステムに関する。
【０００２】
【従来の技術】従来、光または磁界を用いて電力供給側から近接無線カード（ＩＣカード）に対して非接触で電力を供給することは知られている。
【０００３】例えば、駅の改札口やバスや入退口等において使用するキャッシュカード、クレジットカード、乗車券や定期券等をＩＣカード化し、このＩＣカードを使用者が駅の改札口やバスや入退口等に備えられたリーダ／ライタに対して非接触で通過させたとき、リーダ／ライタとカードとの間での電磁結合方式または電磁誘導方式等により電力または／および信号の授受を行う非接触ＩＣカードシステム（近接無線カードシステム）である。
【０００４】一般に、このような非接触ICカードシステムは、リーダ/ライタ側からICカード側へ電力伝送波及びデータ通信変調波を高効率に伝送できるように、リーダ/ライタとICカードとをそれぞれ別個に設計していた。
【０００５】具体的には、図４に示すような周波数特性から導かれるQ（＝f0/ BW、f0：中心周波数、BW：中心周波数f0の有する利得から－３dBとなる帯域幅）を考慮してリーダ/ライタとICカードとを設計していた。
【０００６】
【発明が解決しようとする課題】しかし、リーダ／ライタが電力伝送波にデータ信号（データ通信変調波）を重畳して送受信を行う場合、非接触ICカードシステムでは、以下の条件を満足しなければならない。
【０００７】（１）ICカード側において、あらゆるデータ通信変調波を全て確実に受信できるように、利得がある値以上となるような帯域幅BWをなるべく広くするように設計しなければならない。すなわち、Qが小さくなるように設計しなければならない。
【０００８】（２）ICカード側に十分な電力を供給できるように、電力伝送周波数、例えば前述の中心周波数の利得をなるべく大きくしなければならない。この場合、一般には、Qが大きくなるように設計しなければならない。なお、単にリーダ/ライタ側から送信される電力伝送波を大きくしただけでは、電力伝送波は法規制のないISMバンドを使用するので問題はないが、その電力伝送波に重畳されるデータ通信変調波が、使用する周波数帯域（ISMバンド外）において法規制値を満足できなくなることも考慮しなければならない。
【０００９】このように（１）、（２）の条件は、一方ではQを小さくすることが、他方ではQを大きくすること

InductEV, Inc.
Exhibit 1031
Page 210

が条件となり、両者を満足するようなリーダ/ライタとICカードのQをそれぞれ決定することは非常に困難な作業となる。

【００１０】例えば、リーダ／ライタおよびICカードのそれぞれのアンテナ部の共振回路のＱを高くしてリーダ／ライタとカードとで構成される伝送経路全体のＱを高く設定すると、カードでの受信誘起電力は増加するが、リーダ／ライタとカードとの間での目標とする通信速度に対して十分な信号レベルを確保するための必要な帯域幅が得られないと言った事態となってしまう。

【００１１】本発明は、上記問題点を解決すべくなされたものであり、リーダまたは／およびライタ装置と近接無線カード（ＩＣカード）の共振回路に対して、該リーダまたは／およびライタ装置から該近接無線カード（ＩＣカード）への電力伝送効率を最大とし、かつ目標とする通信速度に対して必要な帯域幅を容易に与える全く新規な方法を提供することを目的とする。

【００１２】

【課題を解決するための手段】そこで、我々は、非接触ICカードシステム全体のQを用いてリーダ/ライタとICカードそれぞれのQを割り振り、設計することで上記目的を達成することとした。

【００１３】具体的には、リーダまたは／およびライタ装置とＩＣカードとの間で電力または／および信号の伝送を非接触で行い、該リーダまたは／およびライタ装置と該ＩＣカードとがそれぞれ該電力または／および該信号を伝送するアンテナコイルと該電力を伝送する電力伝送周波数に同調するように設定した容量と該アンテナコイルの駆動インピーダンスからなる共振回路を備えた非接触式ＩＣカードシステムであって、該リーダまたは／およびライタ装置と該ＩＣカードからなる通信経路全体のＱを用いることで、該リーダまたは／およびライタ装置の有する共振回路と該ＩＣカードの有する共振回路のそれぞれのＱを設定したものである。

【００１４】もしくは、リーダまたは／およびライタ装置とＩＣカードとの間で電力または／および信号の伝送を非接触で行う非接触式ＩＣカードシステムであって、該リーダまたは／およびライタ装置のアンテナ駆動インピーダンスを該リーダまたは／およびライタ装置のアンテナから該ＩＣカードを見込んだインピーダンスにほぼ等しく設定して導き出した伝送経路全体のＱの特性から、該信号の伝送速度に対して所望の帯域幅を得ることが可能となるＱ３を算出し、該算出したＱ３と該リーダまたは／およびライタ装置から該ＩＣカードへの電力伝送効率を最大となる該リーダまたは／およびライタ装置のＱ１と該ＩＣカードのＱ２との関係とを用いることで、該リーダまたは／およびライタ装置と該ＩＣカードの有する共振回路のそれぞれのＱ１、Ｑ２を設定したものである。

【００１５】もしくは、リーダまたは／およびライタ装置とＩＣカードとの間で電力または／および信号の伝送を非接触で行う非接触ＩＣカードシステムであって、該リーダまたは／およびライタ装置と該ＩＣカードからなる通信経路全体のＱを用いることで、該リーダまたは／およびライタ装置と該ＩＣカードそれぞれのQを設定したものである。

【００１６】このような構成にすることで、近接されるＩＣカードに対して電磁結合方式または電磁誘導方式等により電力および信号の授受を行うリーダまたは／およびライタとＩＣカードからなる非接触ICカードシステム（近接無線カードシステム）において、目標とする通信距離においてＩＣカードでの受信効率を最大とし、しかも目標とする通信速度に対して十分な信号レベルを確保するため必要な帯域幅を容易に得ることができる。

【００１７】

【発明の実施の形態】本発明に係る実施の形態について図を用いて説明する。

【００１８】図１は、本発明に係る例えば改札口やバスや入退口や所定の場所に備えられたリーダまたは／およびライタユニット（装置）１から非接触で通過または近接される非接触カード（近接無線カード：ＩＣカード）２に対して電磁結合方式または電磁誘導方式等により電力を伝送すると共に通信を行う電力伝送および通信方式の概略構成を示す図である。非接触カード（近接無線カード：ＩＣカード）２は、使用者が保持して改札口やバスや入退口に備えられたリーダまたは／およびライタユニット１に対して非接触で例えば１０ｃｍ位までの距離を離して通過させることによって電磁結合方式または電磁誘導方式等によりキャッシュカード、クレジットカード、乗車券、定期券等の情報を送受信してキャッシュカード、クレジットカード、乗車券、定期券等の役目をするものである。

【００１９】図２は、図１に示すリーダまたは／およびライタユニット（装置）１と該非接触カード（近接無線カード：ＩＣカード）２の構成を等価回路により表したものである。なお、非接触カード（近接無線カード：ＩＣカード）２を簡素化するために、単一のアンテナ（リーダライタアンテナ）１０１により電力伝送および情報の送受信するように構成した。従って、図２では、リーダまたは／およびライタユニット１に設けられたリーダライタアンテナ１０１と近接無線カード２に形成されたカードアンテナコイル２０１との間で、図３に示す電力伝送波およびデータ通信変調波からなる電磁波（無線）を使って電力の伝送および通信の送受信の両方を行う。なお、図３から分かるように、ＡＳＫ変調方式における電力伝送波と信号波は、周波数領域で見ると異なる周波数成分であるが、時間領域でみると電力伝送波の振幅が信号速度に応じて変化するだけである。つまり、電力伝送波に信号波を掛け合わせた変調波は時間領域では、電力伝送波の波形振幅が上下変動しているようにしか見え

ない。

【００２０】さて、図２に示す非接触カードシステム（近接無線カードシステム）は、周波数ｆｏで発振するＯＳＣ（発振器）３０４と、該ＯＳＣ３０４によってアンテナコイル３０１を駆動する際のアンテナコイル駆動インピーダンス３０３と、該アンテナコイル３０１と周波数ｆｏで直列共振するように設定したアンテナコイル同調容量３０２とで構成されるリーダ／ライタ３００と、アンテナコイル４０１と周波数ｆｏで並列共振するように設定したアンテナコイル同調容量４０２とカード負荷抵抗４０３とで構成されるＩＣカード４００とにより構成されている。そして、リーダ／ライタのアンテナコイル３０１とＩＣカードのアンテナコイル４０１とは電磁誘導または電磁結合によりアンテナ結合係数ｋをもって結合している。この該アンテナ結合係数ｋはリーダ／ライタのアンテナコイル３０１とＩＣカードのアンテナコイル４０１との距離に応じて変化する。ここでは説明のため、リーダ／ライタ側の共振回路を直列共振回路とし、ＩＣカード側の共振回路を並列共振回路としているが、共振回路の組み合わせはこれに限らず種々の態様をとることができる。

【００２１】ここで、上記のようなリーダまたは／およびライタユニット（装置）１、非接触カード（近接無線カード：ＩＣカード）２からなる非接触ICカードシステム全体のQの近似式を求めると数１のようになる。

【００２２】

【数１】

$$Q3 = \frac{1}{\left| \sqrt{\frac{\delta}{4\cdot\varepsilon} + \frac{\lambda}{2} + \frac{\sqrt{\mu+\nu}}{2}} - \sqrt{\frac{\delta}{4\cdot\varepsilon} + \frac{\lambda}{2} - \frac{\sqrt{\mu+\nu}}{2}} \right|} \qquad (数1)$$

ただし

$$\nu = \frac{\frac{\delta^3}{\varepsilon^3} + \frac{4\cdot\gamma\cdot\delta}{\varepsilon^3} + \frac{8\cdot\beta}{\varepsilon}}{4\sqrt{\lambda}}$$

$$\mu = \frac{\delta^2}{2\cdot\varepsilon^2} + \frac{4\cdot\gamma}{3\cdot\varepsilon} - \frac{\theta^{1/3}}{3\cdot 2^{1/3}\cdot\varepsilon} - \frac{2^{1/3}\cdot\kappa}{3\cdot\theta^{1/3}\cdot\varepsilon}$$

$$\lambda = \frac{\delta^2}{4\cdot\varepsilon^2} + \frac{2\cdot\gamma}{3\cdot\varepsilon} + \frac{\theta^{1/3}}{3\cdot 2^{1/3}\cdot\varepsilon} + \frac{2^{1/3}\cdot\kappa}{3\cdot\theta^{1/3}\cdot\varepsilon}$$

$$\kappa = \gamma^2 - 3\cdot\beta\cdot\delta - 12\cdot\alpha\cdot\varepsilon$$

$$\theta = \tau + \sqrt{-4\cdot\zeta + \tau^2}$$

$$\tau = -2\cdot\gamma^3 + 9\cdot\beta\cdot\gamma\cdot\delta - 27\cdot\alpha\cdot\delta^2 + 27\cdot\beta^2\cdot\varepsilon - 72\cdot\alpha\cdot\gamma\cdot\varepsilon$$

$$\zeta = (\gamma^2 - 3\cdot\beta\cdot\delta - 12\cdot\alpha\cdot\varepsilon)^3$$

$$\varepsilon = Q2^2\cdot(Q1 + Q1\cdot Q2^2 - \sqrt{1+Q2^2})^2$$

$$\delta = 2\cdot Q2\cdot(1 + 2\cdot Q1\cdot Q2)\cdot(1 + Q2^2)\cdot(Q1 + Q1\cdot Q2^2 - \sqrt{1+Q2^2}) - \{-Q2 - Q2^3 + \sqrt{1+Q2^2} - Q1\cdot(1 + Q2^2)\}^2$$

$$\gamma = -(1 + 2\cdot Q1\cdot Q2)^2\cdot(1 + Q2^2)^2 - 2\cdot Q1\cdot Q2^2\cdot(1 + Q2^2)\cdot(Q1 + Q1\cdot Q2 - \sqrt{1+Q2^2}) - 2\cdot(Q1 + Q2)\cdot(1 + Q2^2)\cdot\{-Q2 - Q2^3 + \sqrt{1+Q2^2} - Q1\cdot(1+Q2^2)\} + 2\cdot\{2 + 4\cdot Q2^2 + 2\cdot Q2^4 + 2\cdot\sqrt{1+Q2^2}\cdot(Q2+Q2^3)\}$$

$$\beta = -(Q1 + Q2)^2\cdot(1 + Q2^2)^2 + 2\cdot Q1\cdot Q2\cdot(1 + 2\cdot Q1\cdot Q2)\cdot(1 + Q2^2)^2$$

$$\alpha = -Q1^2\cdot Q2^2\cdot(1 + Q2^2)^2$$

InductEV, Inc.
Exhibit 1031
Page 212

【００２３】これは図２に示す等価回路に基づいた回路方程式から求めた結果であり、非接触ICカードシステム全体のQ３をリーダまたは／およびライタユニットのQ１と非接触ICカードのQ２との関係で求めたものである。なお、リーダまたは／およびライタユニット（装置）１、非接触カード（近接無線カード：ＩＣカード）２の構成によって等価回路や数１の内容が当然異なるが、いずれの場合であっても非接触ICカードシステム全体のQ３をリーダまたは／およびライタユニットのQ１と非接触ICカードのQ２との関係で求めたものであれば良い。

【００２４】次に、数１に示すような非接触ICカードシステム全体のQ３をリーダまたは／およびライタユニットのQ１と非接触ICカードのQ２とで表した関係を用いてリーダまたは／およびライタユニットのQ１と非接触ICカードのQ２とを決定する方法（Q１、Q２の割り振り）を図５を用いて説明する。

【００２５】図５は、数１を用いて、該ＩＣカード４のＱ（Ｑ２）と該リーダ／ライタ３と該ＩＣカード４で構成される伝送経路全体のＱ（Ｑ３）との関係、および該ＩＣカード４のＱ（Ｑ２）と該リーダ／ライタ３のＱ（Ｑ１）との関係についてシミュレーションした結果である。この場合、数２を数１に代入することでシミュレーションしている。

【００２６】

【数２】

$$Q1 = \frac{1}{k^2 \cdot \sqrt{1+Q2^2}} \qquad (数２)$$

【００２７】数２は、図２に示す回路において目標とする通信距離でのＩＣカードの受信効率が最大となるよう、リーダ／ライタのアンテナ駆動インピーダンス３０３を目標とする通信距離におけるリーダ／ライタの端子ａ－ａ’３０５からＩＣカード４を見たインピーダンスＺｃ３０６に等しくしてインピーダンスマッチングをとることで導いたものである。

【００２８】また、図５では、リーダ／ライタ３のアンテナコイル３０１を、ターン数［Ｔ］が３のスパイラル形状で外周を１００［ｍｍ］×１００［ｍｍ］とし、ＩＣカード４のアンテナコイル４０１をターン数［Ｔ］が４のスパイラル形状で外周を７７［ｍｍ］×４２［ｍｍ］とし、該リーダ／ライタ３と該ＩＣカード４の距離ｄ＝３０［ｍｍ］（この時結合係数ｋの値はｋ＝０．０９９８）をシミュレーションしている。

【００２９】このようなシミュレーション結果に対して、目標とする通信速度における非接触ICカードシステムで必要となる帯域幅と、使用する電力伝送周波数とから伝送経路全体のQ３を設定することができる。そして設定したQ３から図５に示す関数を用いて、Q１Q２を一義的に設定することができる。

【００３０】例えば、目標とする通信速度に対して必要な帯域幅から伝送経路全体のＱであるＱ３を１０以下とすると、該リーダ／ライタ３のQはＱ１＝４．５～２２．２で、該ＩＣカード４のQはＱ２＝４．４～２２．０とすればよいことがわかる。

【００３１】前述の如く、図５では、電力伝送が最大となる場合の関係式（数２）を用いてシミュレーションした結果であるので、設定したＱ１、Ｑ２は電力伝送が最大となるような値となる。すなわち、ＩＣカード４での受信効率を最大にし、しかも目標とする通信速度に対して十分な帯域幅を得ることが可能なリーダ／ライタ３とＩＣカード４それぞれの共振回路のＱを設定することができる。

【００３２】このように設定されたそれぞれのQから、例えば数３、数４等を用いてL1、L2、Rs、RL等を導けば、ＩＣカード４での受信効率を最大にし、しかも目標とする通信速度に対して十分な帯域幅を得ることが可能なリーダ／ライタ３とＩＣカード４を構成することができる。

【００３３】

【数３】

$$Rs = k^2 \cdot 2 \cdot \pi \cdot fo \cdot L1 \cdot \sqrt{1+Q2^2} \qquad (数３)$$

【００３４】

【数４】

$$Q2 = \frac{RL}{2 \cdot \pi \cdot fo \cdot L2} \qquad (数４)$$

【００３５】なお、数２～数４やその他の構成要素C1、C2等は図２に示す等価回路に基づいた回路方程式から算出することができるのは言うまでもない。

【００３６】一方、上述の説明においては、リーダ／ライタ３のアンテナコイル３０１をターン数［Ｔ］が３のスパイラル形状で外周を１００［ｍｍ］×１００［ｍｍ］とし、ＩＣカード４のアンテナコイル４０１をターン数［Ｔ］が４のスパイラル形状で外周を７７［ｍｍ］×４２［ｍｍ］とし、該リーダ／ライタ３と該ＩＣカード４の距離をｄ＝３０［ｍｍ］で伝送経路全体のＱであるＱ３を１０以下とした場合について述べたが、本発明はこれに限らず種々の形態のものを適用できる。

【００３７】例えば、上記のリーダ／ライタおよびＩＣカードのアンテナを用いて目標とする通信距離を５ｃｍ以下で伝送経路全体のＱを２０以下とした場合、該リーダ／ライタ３のQはＱ１＝３～４０の範囲で、該ＩＣカード４のQはＱ２＝３～４２の範囲で値を設定すればよい。また、リーダ／ライタおよびＩＣカードのアンテナ形状を変えた場合であっても、アンテナ間の結合係数ｋと伝送経路全体のＱまたは／および通信帯域幅と該通信信号の搬送波周波数との比とを用いて本発明を適用できる。

【００３８】さらに、電力伝送の効率を最大とすることによる条件：数２の代わりに、既知のQ1とQ2の関係を用

InductEV, Inc.
Exhibit 1031
Page 213

いて図５のような関係をシミュレーションしても良い。

【００３９】また、リーダ／ライタ３とＩＣカード４で構成される伝送経路全体のＱであるＱ３を用いているが、通信帯域幅と該通信信号の搬送波周波数との比をＱ３として用いてもよい。

【００４０】次に本発明に係るリーダまたは／およびライタユニット（装置）１と非接触カード（近接無線カード：ＩＣカード）２との間において電磁結合方式または電磁誘導方式等により電力伝送および情報の送受信（通信）を行う装置（システム）の一実施の形態に本発明を適用した例について説明する。

【００４１】図６は、１３．５６ＭＨｚの高周波数の電圧を発生するＯＳＣ（発振器）１０５と、近接無線カード２へ送信するための入力された送信データ（ＤＡＴＡ）１０６を符号化する符号化回路１０７と、上記ＯＳＣ１０５から発生した１３．５６ＭＨｚの高周波数の電圧を上記符号化回路１０７の出力信号に従って変調する変調回路１０８と、該変調回路の出力信号に従ってアンテナコイルを駆動するアンテナコイル駆動回路１０９と、該アンテナコイル駆動回路で増幅された信号をインダクタンス結合１０３により結合させ、コンデンサ１０４とアンテナ駆動インピーダンス１２０とを有してインピーダンスをマッチングさせるための整合回路（給電回路）１０２と、該整合回路１０２の出力に応じて電力の伝送およびデータの送信を行うべく電磁波を発生し、近接無線カード２のカードアンテナコイル２０１から電磁波によって送信されてきたデータを受信するＲ／Ｗアンテナコイル１０１と、該Ｒ／Ｗアンテナコイル１０１で受信した信号を整合回路１０２で整合させてインダクタンス結合１０３により生じた信号からノイズ成分を取り除くフィルタ回路１１０と、該フィルタ回路１１０を通して得られる信号を増幅する受信アンプ１１１と、該受信アンプ１１１で増幅された信号を復調する復調回路１１２と、該復調回路１１２で復調された信号を復号化して受信データ（ＤＡＴＡ）１１４として出力する復号化回路１１３とを備えている。そして、送信データ１０６および受信データ１１４はネットワークを介してホストコンピュータ１１５に接続されている。

【００４２】近接無線カード（非接触カード：ＩＣカード）２には、Ｒ／Ｗユニット１のＲ／Ｗアンテナコイル１０１から電力の伝送およびデータの送信を行うべく発生した電磁波を受信し、ロードスイッチング変調された送信データに応じた電磁波を発生するカードアンテナコイル２０１と、該カードアンテナコイル２０１で受信した１３．５６ＭＨｚの電力については整流し、送受信信号についてはコンデンサ２２１と抵抗２２０を用いてインピーダンスをマッチングさせて整合する整合／整流回路２０３と該整合／整流回路２０３から整流された誘起電圧から５ｍＷ程度で２～５Ｖ程度の一定の直流電圧電源２０５として供給する電源回路２０４と上記整合／整流回路２０３から得られる受信信号からクロックを抽出するクロック抽出回路２０６と上記整合／整流回路２０３から得られる受信信号からノイズ成分を取り除くＬＰＦ回路２０７と該ＬＰＦ回路２０７から得られる受信信号を波形整形する波形整形回路２０８と送信信号をロードスイッチング変調させて上記整合／整流回路２０３に与えて整合させてカードアンテナコイル２０１に供給するロードスイッチング変調回路とを有する無線チップ２０２と、該無線チップ２０２のクロック抽出回路２０６で抽出されたクロック信号に基づいて分周してマイコン２１４を働かせる信号を生成する分周回路２１１と無線チップ２０２の波形整形回路２０８から得られる信号を復号化して復号化データ（受信データ）としてマイコン（ＣＰＵ）２１４へ入力する復号化回路２１２とマイコン２１４から得られる送信データを符号化して無線チップ２０２のロードスイッチング回路２０９へ入力する符号化回路２１３カードとしての情報を記憶するメモリを内蔵して送受信データの処理およびメモリとの間のデータの転送等を行うマイコン（ＣＰＵ）２１４とを有し、上記無線チップ２０２の電源回路２０４から安定した電源２０５の供給を受けるＣＰＵ等（ＣＰＵ＋インタフェース）のチップ２１０とを備えている。

【００４３】上記リーダまたは／およびライタユニット（装置）１では、コンデンサ１０４とアンテナ駆動インピーダンス１２０とＲ／Ｗアンテナコイル１０１とを用いて共振回路を構成しており、また上記近接無線カード（非接触カード：ＩＣカード）２では、カードアンテナコイル２０１とコンデンサ２２１と抵抗２２０とを用いて共振回路を構成している。上記システムであっても、前記の実施例と同様にして、目標とする通信距離において該近接無線カード（非接触カード：ＩＣカード）２での受信効率を最大とするように該アンテナ駆動インピーダンス１２０を設定し、かつ目標とする通信速度に対して十分な信号レベルを確保するための必要な帯域幅を得るようにこれら共振回路のそれぞれのＱをそれぞれ設定することができる。

【００４４】最後に、従来はリーダまたは／およびライタ装置のQと、近接無線カードのQとを別々に設計・設定していたので、非接触ICカードシステムの性能は両者の性能だけでなく両者の相性にも依存していたが、本発明を用いて非接触ICカードシステムの有するQを基準とした製品設計を行えば、その値から必要となるリーダまたは／およびライタ装置のQ、近接無線カードのQを一義的に決定・設定できるので（リーダまたは／およびライタ装置と、近接無線カードとの相性を設定できるので）、従来に比べて製品個々の性能のみを考慮した製品設計が可能となるといった効果もある。すなわち、非接触ICカードシステムの有するQを基準として、リーダまたは／およびライタ装置のQ、近接無線カードのQを割り振ることで、リーダまたは／およびライタ装置、近接無線カー

InductEV, Inc.
Exhibit 1031
Page 214

ドを標準化する上で非常に統一のとりやすい条件になるといった効果を有する。

【００４５】

【発明の効果】以上説明したように、本発明によれば、リーダまたは／およびライタ装置と近接無線カード（ＩＣカード）の共振回路に対して、該リーダまたは／およびライタ装置から該近接無線カード（ＩＣカード）への電力伝送効率を最大とし、かつ目標とする通信速度に対して必要な帯域幅となるそれぞれのQを全く新規な方法により設定した非接触ICカードシステムを提供することができる。

【図面の簡単な説明】

【図１】本発明に係るリーダまたは／およびライタ装置と近接無線カード（ＩＣカード）との間において電磁結合方式または電磁誘導方式等によって電力伝送および通信を行うことを示した概略構成斜視図である。

【図２】本発明に係るリーダまたは／およびライタ装置と近接無線カード（ＩＣカード）との間において電磁結合方式または電磁誘導方式等によって電力伝送および通信を行う装置（システム）を等価回路に置き換えた基本概念図である。

【図３】本発明に係る電力伝送波とデータ通信変調波との関係を示す図である。

【図４】Qの原理を示した図である。

【図５】本発明に係るリーダまたは／およびライタ装置の共振回路のQと近接無線カード（ＩＣカード）の共振回路のQと該リーダまたは／およびライタ装置と該近接無線カード（ＩＣカード）とで構成される伝送経路全体のQとの関係を示す図である。

【図６】本発明に係るリーダまたは／およびライタ装置と近接無線カード（ＩＣカード）の実施の形態における一実施例を示す図である。

【符号の説明】

１…リーダ／ライタユニット、２…近接無線カード（ＩＣカード：非接触カード）、１０１…リーダライタアンテナ、１０２…整合回路（給電回路）、１０４…コンデンサ、１０５…電源、１０７…符号化回路、１０８…変調器、１０９…送信アンプ、１１０…フィルタ回路、１１１…受信アンプ、１１２…復調器、１１３…復号化回路、１１５…ホストコンピュータ、１２０…アンテナ駆動インピーダンス、２０１…カードアンテナ、２０２…無線チップ、２０３…整合・整流回路、２０４…電源回路、２０６…クロック抽出回路、２０７…ＬＰＦ回路、２０８…波形整形回路、２０９…ロードスイッチング回路、２１０…ＣＰＵ等のチップ（ＣＰＵ＋インターフェースチップ）、２１１…分周回路、２１２…復号化回路、２１３…符号化回路、２１４…マイコン（ＣＰＵ）、２２０…抵抗、２２１…コンデンサ、３００…リーダ／ライタ、３０１…アンテナコイル、３０２…アンテナコイル同調容量、３０３…アンテナコイル駆動インピーダンス、３０４…ＯＳＣ（発信器）、４００…ＩＣカード、４０１…アンテナコイル、４０２…アンテナコイル同調容量、４０３…カード負荷抵抗

【図１】

図１

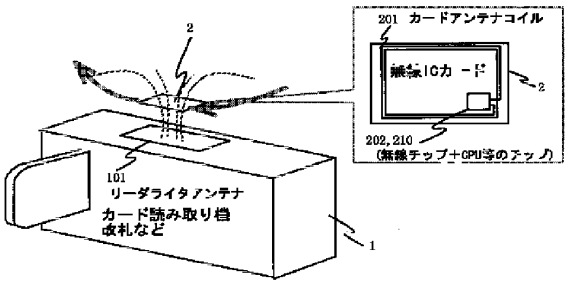

【図２】

図２

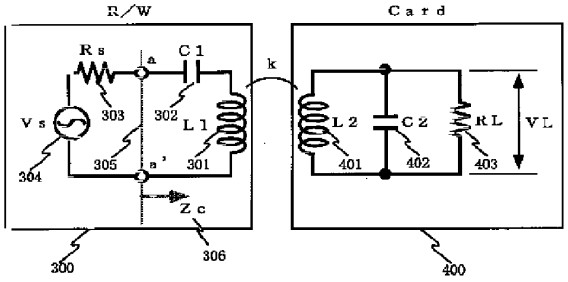

【図３】

図３

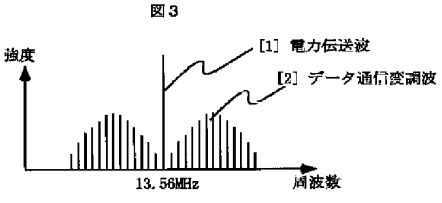

【図４】

図４

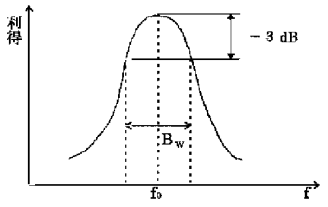

Ｑ＝ｆ０／Ｂｗ
ｆ０：中心周波数
Ｂｗ：帯域幅

【図５】

図５

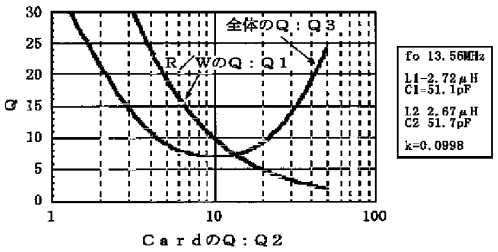

InductEV, Inc.
Exhibit 1031
Page 216

【図６】

図６

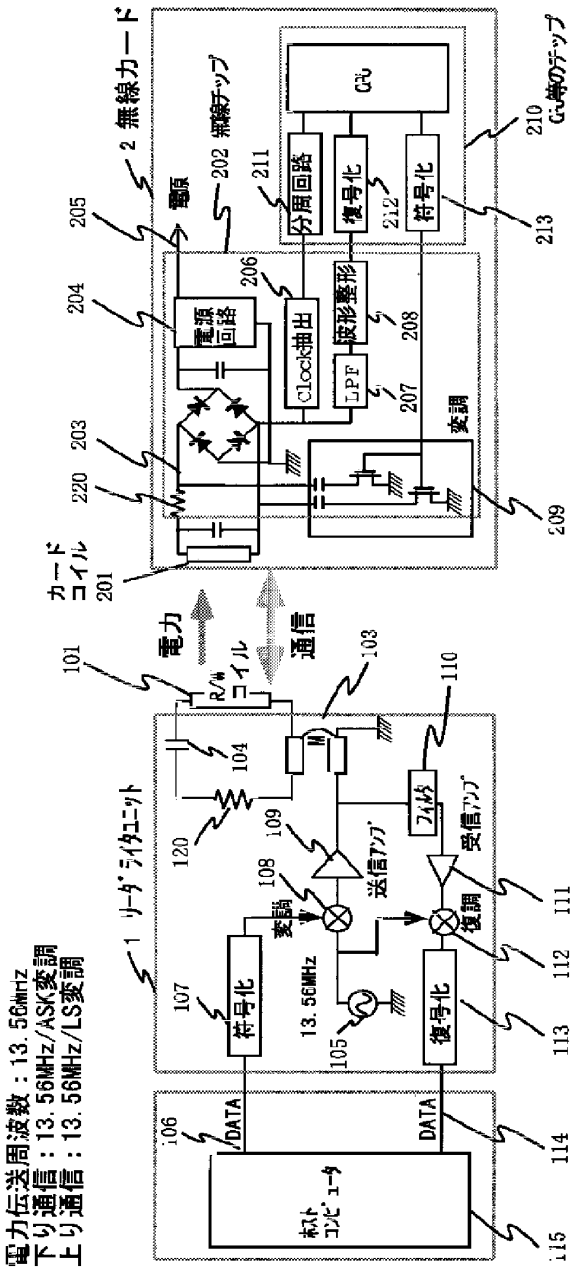
電力伝送周波数：13.56MHz
下り通信：13.56MHz/ASK変調
上り通信：13.56MHz/LS変調
1 リーダライタユニット
2 無線カード
電力
通信
R/W コイル
カード コイル
電源
無線チップ
CPU
分周回路
復号化
符号化
Clock抽出
波形整形
LPF
変調
復調
送信アンプ
受信アンプ
水晶
13.56MHz
DATA
ホスト コンピュータ

フロントページの続き

(72)発明者　上坂　晃一
神奈川県横浜市戸塚区吉田町292番地株式会社日立製作所生産技術研究所内

(72)発明者　吉野　亮三
神奈川県秦野市堀山下１番地株式会社日立製作所汎用コンピュータ事業部内

InductEV, Inc.
Exhibit 1031
Page 218

JPH11-075329 Machine Translation

* NOTICES *

JPO and INPIT are not responsible for any
damages caused by the use of this translation.

1.This document has been translated by computer. So the translation may not reflect the original precisely.
2.**** shows the word which can not be translated.
3.In the drawings, any words are not translated.

CLAIMS
[Claim(s)]
[Claim 1]Transmission of electric power or/and a signal is performed by non-contact between a reader or/and writer equipment, and an IC card, So that it may align with transfer-of-power frequency which transmits an antenna coil in which this reader or/and writer equipment, and this IC card transmit this electric power or/and this signal, respectively, and this electric power. By using Q of the whole communication path which is the non-contact IC card system provided with a resonant circuit which consists of capacity and drive impedance of this antenna coil which were set up, and consists of this reader or/and writer equipment, and this IC card, A non-contact IC card system setting up each Q of a resonant circuit which this reader or/and writer equipment have, and a resonant circuit which this IC card has.
[Claim 2]The non-contact IC card system according to claim 1 having set Q of a resonant circuit provided to the aforementioned IC card as the range of 3-42, and setting Q of a resonant circuit provided to the aforementioned reader or/and writer equipment as the range of 3-40.
[Claim 3]The non-contact IC card system according to claim 1 or 2 computing impedance with a resonant circuit which provided Q of the aforementioned whole communication path to a resonant circuit, the aforementioned reader, or/and writer equipment which were provided to the aforementioned IC card as it became substantially equal.
[Claim 4]It is a non-contact IC card system which performs transmission of electric power or/and a signal by non-contact between a reader or/and writer equipment, and an IC card, From the characteristic of Q of the whole transmission route which set up substantially equally to impedance which expected this IC card antenna drive impedance of this reader or/and writer equipment, and drew it from an antenna of this reader or/and writer equipment, Q3 it becomes possible to obtain desired bandwidth to access speed of this signal is computed, By using a relation of Q2 of Q1 and this IC card of this Q3 computed and this reader, or/and writer equipment to this reader that serves as the maximum in transfer-of-power efficiency to this IC card or/and writer equipment, A non-contact IC card system setting each Q1 of a resonant circuit which this IC card has, and Q2 to this reader or/and writer equipment.
[Claim 5]It is a non-contact IC card system which performs transmission of electric power or/and a signal by non-contact between a reader or/and writer equipment, and an IC card, A non-contact IC card system characterized by setting Q of each of this IC card to this reader or/and writer equipment by using Q of the whole communication path which consists of this reader or/and writer equipment, and this IC card.

DETAILED DESCRIPTION
[Detailed Description of the Invention]
[0001]
[Field of the Invention]The present invention, for example A cash dispenser, electronic money, an automatic wicket system, The ATM card in a physical access control system, a public telephone machine, etc., a credit card, It is related with the non-contact IC card system which performs transfer of power for contiguity radio operation, and communication between noncontact IC cards, such as a ticket, a commuter pass, a coupon ticket, a management card, an ID card, a license, and a telephone card, a reader, or/and writer equipment.
[0002]
[Description of the Prior Art]Supplying electric power from a power supply side by non-contact to a contiguity wireless card (IC card) conventionally using light or a magnetic field is known.
[0003]For example, the ATM card used in the wicket and bus of a station, a gateway, etc., When a credit card, a ticket, a commuter pass, etc. are IC-card-ized and a user passes this IC card by non-contact to the reader/writer with which the wicket and bus of a station, the gateway, etc. were equipped, It is a non-contact IC card system (contiguity radio card system) which performs transfer of electric power or/and a signal with an electromagnetic coupling type or an electromagnetic induction type between reader/writer and a card, etc.
[0004]Generally, such a non-contact IC card system was designing reader/writer and an IC card separately, respectively to transmit a transfer-of-power wave and a data-communications modulated wave to the IC card side efficient from the reader/writer side.

[0005]Reader/writer and an IC card were designed in consideration of Q (=f0/ BW, f0:center frequency, BW: bandwidth set to -3 dB from the gain which the center frequency f0 has) specifically drawn from a frequency characteristic as shown in Fig.4.
[0006]
[Problem to be solved by the invention]However, when reader/writer transmits and receives by superimposing a data signal (data-communications modulated wave) on a transfer-of-power wave, it must be satisfied with a non-contact IC card system of the following conditions.
[0007](1) It must design to, make wide bandwidth BW which becomes more than a value with a gain if possible so that all data-communications modulated waves of all can be reliably received to the IC card side. That is, it must design so that Q may become small.
[0008](2) If possible, the gain of transfer-of-power frequency, for example, the above-mentioned center frequency, must be enlarged so that sufficient electric power for the IC card side can be supplied. In this case, generally, it must design so that Q may become largely. Only by enlarging the transfer-of-power wave only transmitted from the reader/writer side, Since a transfer-of-power wave uses an ISM band without laws and regulations, it is satisfactory, but it must take into consideration that it also becomes impossible for the superimposed data-communications modulated wave carried out to be satisfied with the transfer-of-power wave of a laws-and-regulations value in the frequency band (outside of an ISM band) to be used.
[0009]Thus, it becomes very difficult work that (1) or (2) condition determines Q of reader/writer which satisfies both on the other hand by it becoming conditions that making Q small enlarges Q on the other hand, and an IC card, respectively.
[0010]For example, if Q of the whole transmission route which makes high Q of the resonant circuit of each antenna section of reader/writer and an IC card, and comprises reader/writer and a card is set up highly, the reception induction electric power in a card will increase, but. It will be

the situation referred to as that the required bandwidth for securing sufficient signal level to the communication speed made into the target between reader/writer and a card is not obtained.
[0011]The present invention is made that the above-mentioned problem should be solved, and is a thing.
The purpose receives the resonant circuit of writer equipment and a contiguity wireless card (IC card), It is providing a completely new method of making transfer-of-power efficiency from this reader or/and writer equipment to this contiguity wireless card (IC card) into the maximum, and giving required bandwidth easily to a target communication speed.

[0012]
[Means for solving problem]Then, we decided to attain the above-mentioned purpose by assigning and designing Q of reader/writer and each IC card using Q of the whole non-contact IC card system.
[0013]Transmission of electric power or/and a signal is specifically performed by non-contact between a reader or/and writer equipment, and an IC card, So that it may align with the transfer-of-power frequency which transmits the antenna coil in which this reader or/and writer equipment, and this IC card transmit this electric power or/and this signal, respectively, and this electric power. By using Q of the whole communication path which is the noncontact type IC card system provided with the resonant circuit which consists of the capacity and the drive impedance of this antenna coil which were set up, and consists of this reader or/and writer equipment, and this IC card, Each Q of the resonant circuit which this reader or/and writer equipment have, and the resonant circuit which this IC card has is set up.
[0014]Or it is a noncontact type IC card system which performs transmission of electric power or/and a signal by non-contact between a reader or/and writer equipment, and an IC card, From the characteristic of Q of the whole transmission route which set up substantially equally to the impedance which expected this IC card the antenna drive impedance of this reader or/and writer equipment, and drew it from the antenna of this reader or/and writer equipment, Q3 it becomes possible to obtain desired bandwidth to the access speed of this signal is computed, By using the relation of Q2 of Q1 and this IC card of this Q3 computed and this reader, or/and writer equipment to this reader that serves as the maximum in the transfer-of-power efficiency to this IC card or/and writer equipment, Each Q1 of the resonant circuit which this IC card has, and Q2 are set to this reader or/and writer equipment.
[0015]Or it is a non-contact IC card system which performs transmission of electric power or/and a signal by non-contact between a reader or/and writer equipment, and an IC card, By using Q of the whole communication path which consists of this reader or/and writer equipment, and this IC card, Q of each of this IC card is set to this reader or/and writer equipment.
[0016]In the non-contact IC card system (contiguity radio card system) which consists of the reader or/and writer which perform transfer of electric power and a signal with an electromagnetic coupling type or an electromagnetic induction type by having such composition to the approaching IC card, and an IC card, Receiving efficiency in an IC card is made into the maximum in a target communication range, and since sufficient signal level is moreover secured to a target communication speed, required bandwidth can be obtained easily.
[0017]
[Mode for carrying out the invention]It describes using figures about the embodiment concerning the present invention.

[0018]Fig.1, As opposed to the non-contact card (contiguity wireless card: IC card) 2 which passes or approaches by non-contact from the reader with which the wicket, the bus, the gateway, and the predetermined place were equipped for example, it started the present invention, or/and the writer unit (equipment) 1. It is a figure showing the schematic structure of the transfer of power which electric power is transmitted with an electromagnetic coupling type or an electromagnetic induction type, and communicates, and a communication method. The non-contact card (contiguity wireless card: IC card) 2, By detaching the distance of an about [10 cm] and making it pass by non-contact to the reader or/and the writer unit 1 with which the user held and the wicket, the bus, and the gateway were equipped, with an electromagnetic coupling type or an electromagnetic induction type An ATM card, a credit card, a ticket, The information on a commuter pass etc. is transmitted and received and tasks, such as an ATM card, a credit card, a ticket, and a commuter pass, are carried out.
[0019]Fig.2 expresses the composition of the reader or/and the writer unit (equipment) 1 which are shown in Fig.1, and this non-contact card (contiguity wireless card: IC card) 2 by an equivalent circuit.In order to simplify the non-contact card (contiguity wireless card: IC card) 2, it constituted so that transfer of power and information might transmit and receive with the single antenna (reader/writer antenna) 101. Therefore, between the reader/writer antenna 101 provided by the reader or/and the writer unit 1 in Fig.2, and the card antenna coil 201 formed in the contiguity wireless card 2, Both transmission and reception of transmission of electric power and communication are performed using the electromagnetic waves (radio) which consist of the transfer-of-power wave and data-communications modulated wave which are shown in Fig.3. As Fig.3 shows, it is a frequency component which is different when the transfer-of-power wave and signal wave in an ASK modulation system are seen in a frequency domain, but if it sees by a segment of time, transfer-of-power wave amplitude will only change according to a signal speed. That is, by a segment of time, the modulated wave which multiplied the signal wave by the transfer-of-power wave is visible as the waveform amplitude of a transfer-of-power wave is only carrying out up-and-down change.
[0020]Now, the non-contact card system (contiguity radio card system) shown in Fig.2, OSC(oscillator) 304 oscillated on the frequency fo, and the antenna coil drive impedance 303 at the time of driving the antenna coil 301 by this OSC304, The reader/writer 300 which comprises the antenna coil tuning capacitance 302 set up to carry out series resonance to this antenna coil 301 on the frequency fo, It is constituted by IC card 400 which comprises the antenna coil tuning capacitance 402 set up to carry out parallel resonance to the antenna coil 401 on the frequency fo, and the card load resistance 403. And the antenna coil 301 of reader/writer and the antenna coil 401 of an IC card are combined with the antenna-coupler-control coefficient k by electromagnetic induction or inductive coupling. This this antenna-coupler-control coefficient k changes according to the distance of the antenna coil 301 of reader/writer, and the antenna coil 401 of an IC card. Although the resonant circuit by the side of reader/writer is made into a series resonant circuit and the resonant circuit by the side of an IC card is used as the parallel resonant circuit here for the description, the combination of a resonant circuit can take not only this but various modes.
[0021]Here, if the approximate expression of Q of the whole non-contact IC card system consisting of above readers or/and the writer units (equipment) 1, and the non-contact card (contiguity wireless card: IC card) 2 is searched for, it will become like several 1.
[0022]
[Mathematical formula 1]

$$Q3 = \frac{1}{\left| \sqrt{\frac{\delta}{4\cdot\varepsilon} + \frac{\lambda}{2} + \frac{\sqrt{\mu+\nu}}{2}} - \sqrt{\frac{\delta}{4\cdot\varepsilon} + \frac{\lambda}{2} - \frac{\sqrt{\mu+\nu}}{2}} \right|} \quad \text{（数１）}$$

ただし

$$\nu = \frac{\frac{\delta^3}{\varepsilon^3} + \frac{4\cdot\gamma\cdot\delta}{\varepsilon^3} + \frac{8\cdot\beta}{\varepsilon}}{4\sqrt{\lambda}}$$

$$\mu = \frac{\delta^2}{2\cdot\varepsilon^2} + \frac{4\cdot\gamma}{3\cdot\varepsilon} - \frac{\theta^{1/3}}{3\cdot 2^{1/3}\cdot\varepsilon} - \frac{2^{1/3}\cdot\kappa}{3\cdot\theta^{1/3}\cdot\varepsilon}$$

$$\lambda = \frac{\delta^2}{4\cdot\varepsilon^2} + \frac{2\cdot\gamma}{3\cdot\varepsilon} + \frac{\theta^{1/3}}{3\cdot 2^{1/3}\cdot\varepsilon} + \frac{2^{1/3}\cdot\kappa}{3\cdot\theta^{1/3}\cdot\varepsilon}$$

$$\kappa = \gamma^2 - 3\cdot\beta\cdot\delta - 12\cdot\alpha\cdot\varepsilon$$

$$\theta = \tau + \sqrt{-4\cdot\zeta + \tau^2}$$

$$\tau = -2\cdot\gamma^3 + 9\cdot\beta\cdot\gamma\cdot\delta - 27\cdot\alpha\cdot\delta^2 + 27\cdot\beta^2\cdot\varepsilon - 72\cdot\alpha\cdot\gamma\cdot\varepsilon$$

$$\zeta = (\gamma^2 - 3\cdot\beta\cdot\delta - 12\cdot\alpha\cdot\varepsilon)^3$$

$$\varepsilon = Q2^2\cdot(Q1 + Q1\cdot Q2^2 - \sqrt{1+Q2^2})^2$$

$$\delta = 2\cdot Q2\cdot(1 + 2\cdot Q1\cdot Q2)\cdot(1 + Q2^2)\cdot(Q1 + Q1\cdot Q2^2 - \sqrt{1+Q2^2}) - \{-Q2 - Q2^3 + \sqrt{1+Q2^2} - Q1\cdot(1+Q2^2)\}^2$$

$$\gamma = -(1 + 2\cdot Q1\cdot Q2)^2\cdot(1 + Q2^2)^2 - 2\cdot Q1\cdot Q2^2\cdot(1 + Q2^2)\cdot(Q1 + Q1\cdot Q2 - \sqrt{1+Q2^2}) - 2\cdot(Q1 + Q2)\cdot(1 + Q2^2)\cdot\{-Q2 - Q2^3 + \sqrt{1+Q2^2} - Q1\cdot(1+Q2^2)\} + 2\cdot\{2 + 4\cdot Q2^2 + 2\cdot Q2^4 + 2\cdot\sqrt{1+Q2^2}\cdot(Q2+Q2^3)\}$$

$$\beta = -(Q1 + Q2)^2\cdot(1 + Q2^2)^2 + 2\cdot Q1\cdot Q2\cdot(1 + 2\cdot Q1\cdot Q2)\cdot(1 + Q2^2)^2$$

$$\alpha = -Q1^2\cdot Q2^2\cdot(1 + Q2^2)^2$$

[0023]This is the result of asking from the circuit equation based on the equivalent circuit shown in Fig.2, and calculates Q3 of the whole non-contact IC card system by the relation of Q2 of Q1 and the noncontact IC card of a reader or/and a writer unit. Although an equivalent circuit and the several 1 contents naturally change with composition of a reader or/and the writer unit (equipment) 1, and the non-contact card (contiguity wireless card: IC card) 2, What is necessary is just to calculate Q3 of the whole non-contact IC card system by the relation of Q2 of Q1 and the noncontact IC card of a reader or/and a writer unit, even if it is which case.

[0024]Next, Q3 of the whole non-contact IC card system as shown in several 1. The method (assignment of Q1 and Q2) of determining Q2 of Q1 and the noncontact IC card of a reader

or/and a writer unit using the relation expressed with Q2 of Q1 and the noncontact IC card of a reader or/and a writer unit is described using Fig.5.

[0025]Fig.5 is the result of carrying out a simulation using several 1 about the relation between Q (Q2) of this IC card 4, this reader/writer 3, and Q (Q3) of the whole transmission route which comprises this IC card 4, and the relation between Q (Q2) of this IC card 4, and Q (Q1) of this reader/writer 3. In this case, the simulation of several 2 is carried out by substituting for several 1.

[0026]

[Mathematical formula 2]

$$Q1 = \frac{1}{k^2 \cdot \sqrt{1+Q2^2}} \qquad (数2)$$

[0027]Several two so that the receiving efficiency of the IC card in a target communication range may serve as the maximum in the circuit shown in Fig.2. It leads by making it equal to impedance Zc306 which looked at IC card 4 from terminal a-a'305 of the reader/writer in the communication range aiming at the antenna drive impedance 303 of reader/writer, and taking impedance matching.

[0028]In Fig.5, a turn number [T] sets a periphery to 100[mm] x100 [mm] for the antenna coil 301 of the reader/writer 3 with the spiral shape of 3, A turn number [T] sets a periphery to 77[mm] x42 [mm] for the antenna coil 401 of IC card 4 with the spiral shape of 4, and the simulation of the distance d= 30 of this IC card 4 [mm] (the value of the coupling coefficient k is k= 0.0998 at this time) is carried out to this reader/writer 3.

[0029]Q3 of the whole transmission route can be set to the bandwidth which is needed with the non-contact IC card system at a target communication speed to such a simulation result from the transfer-of-power frequency to be used. And Q1Q2 can be uniquely set up using the function shown in Fig.5 from Q3 set up.

[0030]For example, when Q3 which is Q of the whole transmission route is made or less into ten from required bandwidth to a target communication speed, Q of this reader/writer 3 is Q1=4.5-22.2, and it turns out that Q of this IC card 4 should just set to Q2=4.4 - 22.0.

[0031]Since it is the result of carrying out a simulation in Fig.5 using an expression of relations (several 2) in case transfer of power serves as the maximum like the above-mentioned, Q1 set up and Q2 become the value that transfer of power serves as the maximum. namely, the reader/writer 3 which receiving efficiency in IC card 4 is made into the maximum, and can moreover obtain sufficient bandwidth to a target communication speed and IC card 4 -- Q of each resonant circuit can be set up.

[0032]If L1, L2, Rs, RL, etc. are drawn from each Q set up in this way, for example using several 3, several 4, etc., Receiving efficiency in IC card 4 can be made into the maximum, and the reader/writer 3 and IC card 4 which can moreover obtain sufficient bandwidth to a target communication speed can be constituted.

[0033]

[Mathematical formula 3]

$$Rs = k^2 \cdot 2 \cdot \pi \cdot fo \cdot L1 \cdot \sqrt{1+Q2^2} \qquad (数3)$$

[0034]

[Mathematical formula 4]

$$Q2 = \frac{RL}{2 \cdot \pi \cdot fo \cdot L2} \qquad (数4)$$

[0035]It cannot be overemphasized that several 2 - the component C1 of a four number or others, C2, etc. are computable from the circuit equation based on the equivalent circuit shown in Fig.2.
[0036]On the other hand in an above-mentioned description, a turn number [T] sets a periphery to 100[mm] x100 [mm] for the antenna coil 301 of the reader/writer 3 with the spiral shape of 3, Although the turn number [T] set the periphery to 77[mm] x42 [mm] for the antenna coil 401 of IC card 4 with the spiral shape of 4 and the case where Q3 which is Q of the whole transmission route in d= 30 [mm] about the distance of this reader/writer 3 and this IC card 4 was made or less into ten was described, The present invention can apply the thing of not only this but various forms.
[0037]For example, when Q of the whole transmission route is made or less into 20 for a target communication range at 5 cm or less using the above-mentioned reader/writer and the antenna of an IC card, the ranges of Q of this reader/writer 3 are Q1=3 - 40, and Q of this IC card 4 should just set up a value in Q2=3 - 42. Even if it is a case where reader/writer and the antenna form of an IC card are changed, the present invention is applicable using Q of the coupling coefficient k between antennas, and the whole transmission route, or/and the ratio of communication band width and the carrier frequency of this signal transmission.
[0038]The conditions by making efficiency of transfer of power into the maximum: Instead of a two number, the relation of known Q1 and Q2 may be used, and the simulation of a relation like Fig.5 may be carried out.
[0039]Although Q3 which is Q of the whole transmission route which comprises the reader/writer 3 and IC card 4 is used, the ratio of communication band width and the carrier frequency of this signal transmission may be used as Q3.
[0040]Next, between the reader or/and the writer unit (equipment) 1 concerning the present invention, and the non-contact card (contiguity wireless card: IC card) 2. It describes about the example which applied the present invention to the 1 embodiment of equipment (system) which sets and performs transmission and reception (communication) of transfer of power and information with an electromagnetic coupling type or an electromagnetic induction type.
[0041]OSC(oscillator) 105 in which Fig.6 generates voltage with a high frequency of 13.56 MHz, The coding circuit 107 which codes send data (DATA)106 into which it input for transmitting to the contiguity wireless card 2, The modulation circuit 108 which modulates voltage with a high frequency of 13.56 MHz generated from the above-mentioned OSC105 according to the output signal of the above-mentioned coding circuit 107, The antenna coil drive circuit 109 which drives an antenna coil according to the output signal of this modulation circuit, The signal amplified in this antenna coil drive circuit is combined by the inductance combination 103, The matching circuit (feeder circuit) 102 for having the capacitor 104 and the antenna drive impedance 120, and making impedance match, Electromagnetic waves are generated in order to perform transmission of electric power, and transmission of data according to the output of this matching circuit 102, The R/W antenna coil 101 which receives the data transmitted by electromagnetic waves from the card antenna coil 201 of the contiguity wireless card 2, The filter circuit 110 which removes a noise component from the signal which was made to adjust the signal received with this R/W antenna coil 101 in the matching circuit 102, and was produced by the inductance combination 103, The receiving amplifier 111 which amplifies the signal acquired through this filter circuit 110, It has the demodulator circuit 112 which restores to the signal amplified with this receiving amplifier 111, and the decoding circuit 113 which decrypts the signal to which it restored in this demodulator circuit 112, and is outputted as received-data

(DATA)114. And the send data 106 and the received data 114 are connected to the host computer 115 via the network.
[0042]In the contiguity wireless card (non-contact card: IC card) 2, The card antenna coil 201 which receives the electromagnetic waves generated in order to perform transmission of electric power, and transmission of data from the R/W antenna coil 101 of the R/W unit 1, and generates the electromagnetic waves according to the send data by which Rhodes itching modulation was carried out, About the 13.56-MHz electric power received with this card antenna coil 201, a ready sink, From the induced voltage rectified from the consistency / rectification circuit 203 which is made to match impedance using the capacitor 221 and the resistance 220, and is adjusted about transmission and reception signals, and this the consistency/rectification circuit 203, at about 5 mW as the about [2-5V] fixed direct-current-voltage power supply 205. The input signal acquired from the power supply circuit 204 to supply, the clock extraction circuit 206 which extracts a clock from the input signal acquired from above-mentioned consistency / rectification circuit 203, the LPF circuit 207 which removes a noise component from the input signal acquired from above-mentioned consistency / rectification circuit 203, and this LPF circuit 207. The wireless chip 202 which has a Rhodes itching modulation circuit which carries out Rhodes itching modulation of the waveform shaping circuit 208 and sending signal which shape in waveform, gives and adjusts in above-mentioned consistency / rectification circuit 203, and is supplied to the card antenna coil 201, Dividing is carried out based on the clock signal extracted in the clock extraction circuit 206 of this radio chip 202. The signal acquired from the frequency divider 211 which generates the signal which uses the microcomputer 214, and the waveform shaping circuit 208 of the wireless chip 202 is decrypted. The decoding circuit 212 input into the microcomputer (CPU) 214 as decoding data (received data) and the send data obtained from the microcomputer 214 are coded. It has the microcomputer (CPU) 214 which contains the memory which memorizes the information as coding circuit 213 card input into the Rhodes itching circuit 209 of the wireless chip 202, and performs processing of transmitted and received data, transmission of the data between memories, etc., It has the chips 210, such as CPU (CPU+ interface) which receives supply of the power supply 205 stable from the power supply circuit 204 of the above-mentioned radio chip 202.
[0043]In the above-mentioned reader or/and the writer unit (equipment) 1, The resonant circuit is constituted using the capacitor 104, the antenna drive impedance 120, and the R/W antenna coil 101, The resonant circuit consists of the above-mentioned contiguity wireless cards (non-contact card: IC card) 2 using the card antenna coil 201, the capacitor 221, and the resistance 220. Even if it is the above-mentioned system, this antenna drive impedance 120 is set up like the aforementioned working example to make receiving efficiency in this contiguity wireless card (non-contact card: IC card) 2 into the maximum in a target communication range, And each Q of these resonant circuits can be set up, respectively to obtain the required bandwidth for securing sufficient signal level to a target communication speed.
[0044]Finally, since Q of a reader or/and writer equipment and Q of the contiguity wireless card were designed and set up independently conventionally, depended for the performance of the non-contact IC card system not only on both performance but on both affinity, but. If the product design on the basis of Q which a non-contact IC card system has using the present invention is performed, Since Q of the reader or/and writer equipment which are needed from the value, and Q of a contiguity wireless card can be determined and set up uniquely (with a reader or/and writer equipment) Since affinity with a contiguity wireless card can be set up, it is effective in the product design which took only the performance of product each into consideration

compared with the former becoming possible. That is, by assigning Q of a reader or/and writer equipment, and Q of a contiguity wireless card on the basis of Q which a non-contact IC card system has, when standardizing a reader or/and writer equipment, and a contiguity wireless card, it has the effect of becoming the conditions unification is very apt to take.
[0045]
[Effect of the Invention]As described above, according to the present invention, the resonant circuit of a reader or/and writer equipment, and a contiguity wireless card (IC card) is received, The non-contact IC card system which set up each Q which makes the maximum transfer-of-power efficiency from this reader or/and writer equipment to this contiguity wireless card (IC card), and becomes required bandwidth to a target communication speed by the completely new method can be provided.

TECHNICAL FIELD
[Field of the Invention]The present invention, for example A cash dispenser, electronic money, an automatic wicket system, The ATM card in a physical access control system, a public telephone machine, etc., a credit card, It is related with the non-contact IC card system which performs transfer of power for contiguity radio operation, and communication between noncontact IC cards, such as a ticket, a commuter pass, a coupon ticket, a management card, an ID card, a license, and a telephone card, a reader, or/and writer equipment.

PRIOR ART
[Description of the Prior Art]Supplying electric power from a power supply side by non-contact to a contiguity wireless card (IC card) conventionally using light or a magnetic field is known.
[0003]For example, the ATM card used in the wicket and bus of a station, a gateway, etc., When a credit card, a ticket, a commuter pass, etc. are IC-card-ized and a user passes this IC card by non-contact to the reader/writer with which the wicket and bus of a station, the gateway, etc. were equipped, It is a non-contact IC card system (contiguity radio card system) which performs transfer of electric power or/and a signal with an electromagnetic coupling type or an electromagnetic induction type between reader/writer and a card, etc.
[0004]Generally, such a non-contact IC card system was designing reader/writer and an IC card separately, respectively to transmit a transfer-of-power wave and a data-communications modulated wave to the IC card side efficient from the reader/writer side.

[0005]Reader/writer and an IC card were designed in consideration of Q (=f0/ BW, f0:center frequency, BW: bandwidth set to -3 dB from the gain which the center frequency f0 has) specifically drawn from a frequency characteristic as shown in Fig.4.

EFFECT OF THE INVENTION
[Effect of the Invention]As described above, according to the present invention, the resonant circuit of a reader or/and writer equipment, and a contiguity wireless card (IC card) is received, The non-contact IC card system which set up each Q which makes the maximum transfer-of-power efficiency from this reader or/and writer equipment to this contiguity wireless card (IC card), and becomes required bandwidth to a target communication speed by the completely new method can be provided.

TECHNICAL PROBLEM

[Problem to be solved by the invention]However, when reader/writer transmits and receives by superimposing a data signal (data-communications modulated wave) on a transfer-of-power wave, it must be satisfied with a non-contact IC card system of the following conditions.
[0007](1) It must design to, make wide bandwidth BW which becomes more than a value with a gain if possible so that all data-communications modulated waves of all can be reliably received to the IC card side. That is, it must design so that Q may become small.
[0008](2) If possible, the gain of transfer-of-power frequency, for example, the above-mentioned center frequency, must be enlarged so that sufficient electric power for the IC card side can be supplied. In this case, generally, it must design so that Q may become largely. Only by enlarging the transfer-of-power wave only transmitted from the reader/writer side, Since a transfer-of-power wave uses an ISM band without laws and regulations, it is satisfactory, but it must take into consideration that it also becomes impossible for the superimposed data-communications modulated wave carried out to be satisfied with the transfer-of-power wave of a laws-and-regulations value in the frequency band (outside of an ISM band) to be used.
[0009]Thus, it becomes very difficult work that (1) or (2) condition determines Q of reader/writer which satisfies both on the other hand by it becoming conditions that making Q small enlarges Q on the other hand, and an IC card, respectively.
[0010]For example, if Q of the whole transmission route which makes high Q of the resonant circuit of each antenna section of reader/writer and an IC card, and comprises reader/writer and a card is set up highly, the reception induction electric power in a card will increase, but. It will be the situation referred to as that the required bandwidth for securing sufficient signal level to the communication speed made into the target between reader/writer and a card is not obtained.
[0011]The present invention is made that the above-mentioned problem should be solved, and is a thing.
The purpose receives the resonant circuit of writer equipment and a contiguity wireless card (IC card), It is providing a completely new method of making transfer-of-power efficiency from this reader or/and writer equipment to this contiguity wireless card (IC card) into the maximum, and giving required bandwidth easily to a target communication speed.

MEANS
[Means for solving problem]Then, we decided to attain the above-mentioned purpose by assigning and designing Q of reader/writer and each IC card using Q of the whole non-contact IC card system.
[0013]Transmission of electric power or/and a signal is specifically performed by non-contact between a reader or/and writer equipment, and an IC card, So that it may align with the transfer-of-power frequency which transmits the antenna coil in which this reader or/and writer equipment, and this IC card transmit this electric power or/and this signal, respectively, and this electric power. By using Q of the whole communication path which is the noncontact type IC card system provided with the resonant circuit which consists of the capacity and the drive impedance of this antenna coil which were set up, and consists of this reader or/and writer equipment, and this IC card, Each Q of the resonant circuit which this reader or/and writer equipment have, and the resonant circuit which this IC card has is set up.
[0014]Or it is a noncontact type IC card system which performs transmission of electric power or/and a signal by non-contact between a reader or/and writer equipment, and an IC card, From the characteristic of Q of the whole transmission route which set up substantially equally to the impedance which expected this IC card the antenna drive impedance of this reader or/and writer

equipment, and drew it from the antenna of this reader or/and writer equipment, Q3 it becomes possible to obtain desired bandwidth to the access speed of this signal is computed, By using the relation of Q2 of Q1 and this IC card of this Q3 computed and this reader, or/and writer equipment to this reader that serves as the maximum in the transfer-of-power efficiency to this IC card or/and writer equipment, Each Q1 of the resonant circuit which this IC card has, and Q2 are set to this reader or/and writer equipment.
[0015]Or it is a non-contact IC card system which performs transmission of electric power or/and a signal by non-contact between a reader or/and writer equipment, and an IC card, By using Q of the whole communication path which consists of this reader or/and writer equipment, and this IC card, Q of each of this IC card is set to this reader or/and writer equipment.
[0016]In the non-contact IC card system (contiguity radio card system) which consists of the reader or/and writer which perform transfer of electric power and a signal with an electromagnetic coupling type or an electromagnetic induction type by having such composition to the approaching IC card, and an IC card, Receiving efficiency in an IC card is made into the maximum in a target communication range, and since sufficient signal level is moreover secured to a target communication speed, required bandwidth can be obtained easily.
[0017]
[Mode for carrying out the invention]It describes using figures about the embodiment concerning the present invention.
[0018]Fig.1, As opposed to the non-contact card (contiguity wireless card: IC card) 2 which passes or approaches by non-contact from the reader with which the wicket, the bus, the gateway, and the predetermined place were equipped for example, it started the present invention, or/and the writer unit (equipment) 1. It is a figure showing the schematic structure of the transfer of power which electric power is transmitted with an electromagnetic coupling type or an electromagnetic induction type, and communicates, and a communication method. The non-contact card (contiguity wireless card: IC card) 2, By detaching the distance of an about [10 cm] and making it pass by non-contact to the reader or/and the writer unit 1 with which the user held and the wicket, the bus, and the gateway were equipped, with an electromagnetic coupling type or an electromagnetic induction type An ATM card, a credit card, a ticket, The information on a commuter pass etc. is transmitted and received and tasks, such as an ATM card, a credit card, a ticket, and a commuter pass, are carried out.
[0019]Fig.2 expresses the composition of the reader or/and the writer unit (equipment) 1 which are shown in Fig.1, and this non-contact card (contiguity wireless card: IC card) 2 by an equivalent circuit.In order to simplify the non-contact card (contiguity wireless card: IC card) 2, it constituted so that transfer of power and information might transmit and receive with the single antenna (reader/writer antenna) 101. Therefore, between the reader/writer antenna 101 provided by the reader or/and the writer unit 1 in Fig.2, and the card antenna coil 201 formed in the contiguity wireless card 2, Both transmission and reception of transmission of electric power and communication are performed using the electromagnetic waves (radio) which consist of the transfer-of-power wave and data-communications modulated wave which are shown in Fig.3. As Fig.3 shows, it is a frequency component which is different when the transfer-of-power wave and signal wave in an ASK modulation system are seen in a frequency domain, but if it sees by a segment of time, transfer-of-power wave amplitude will only change according to a signal speed. That is, by a segment of time, the modulated wave which multiplied the signal wave by the transfer-of-power wave is visible as the waveform amplitude of a transfer-of-power wave is only carrying out up-and-down change.

[0020]Now, the non-contact card system (contiguity radio card system) shown in Fig.2, OSC(oscillator) 304 oscillated on the frequency fo, and the antenna coil drive impedance 303 at the time of driving the antenna coil 301 by this OSC304, The reader/writer 300 which comprises the antenna coil tuning capacitance 302 set up to carry out series resonance to this antenna coil 301 on the frequency fo, It is constituted by IC card 400 which comprises the antenna coil tuning capacitance 402 set up to carry out parallel resonance to the antenna coil 401 on the frequency fo, and the card load resistance 403. And the antenna coil 301 of reader/writer and the antenna coil 401 of an IC card are combined with the antenna-coupler-control coefficient k by electromagnetic induction or inductive coupling. This this antenna-coupler-control coefficient k changes according to the distance of the antenna coil 301 of reader/writer, and the antenna coil 401 of an IC card. Although the resonant circuit by the side of reader/writer is made into a series resonant circuit and the resonant circuit by the side of an IC card is used as the parallel resonant circuit here for the description, the combination of a resonant circuit can take not only this but various modes.

[0021]Here, if the approximate expression of Q of the whole non-contact IC card system consisting of above readers or/and the writer units (equipment) 1, and the non-contact card (contiguity wireless card: IC card) 2 is searched for, it will become like several 1.

[0022]

[Mathematical formula 1]

$$Q3 = \frac{1}{\left| \sqrt{\frac{\delta}{4\cdot\varepsilon} + \frac{\lambda}{2} + \frac{\sqrt{\mu+\nu}}{2}} - \sqrt{\frac{\delta}{4\cdot\varepsilon} + \frac{\lambda}{2} - \frac{\sqrt{\mu+\nu}}{2}} \right|} \quad \text{（数１）}$$

ただし

$$\nu = \frac{\frac{\delta^3}{\varepsilon^3} + \frac{4\cdot\gamma\cdot\delta}{\varepsilon^3} + \frac{8\cdot\beta}{\varepsilon}}{4\sqrt{\lambda}}$$

$$\mu = \frac{\delta^2}{2\cdot\varepsilon^2} + \frac{4\cdot\gamma}{3\cdot\varepsilon} - \frac{\theta^{1/3}}{3\cdot 2^{1/3}\cdot\varepsilon} - \frac{2^{1/3}\cdot\kappa}{3\cdot\theta^{1/3}\cdot\varepsilon}$$

$$\lambda = \frac{\delta^2}{4\cdot\varepsilon^2} + \frac{2\cdot\gamma}{3\cdot\varepsilon} + \frac{\theta^{1/3}}{3\cdot 2^{1/3}\cdot\varepsilon} + \frac{2^{1/3}\cdot\kappa}{3\cdot\theta^{1/3}\cdot\varepsilon}$$

$$\kappa = \gamma^2 - 3\cdot\beta\cdot\delta - 12\cdot\alpha\cdot\varepsilon$$

$$\theta = \tau + \sqrt{-4\cdot\zeta + \tau^2}$$

$$\tau = -2\cdot\gamma^3 + 9\cdot\beta\cdot\gamma\cdot\delta - 27\cdot\alpha\cdot\delta^2 + 27\cdot\beta^2\cdot\varepsilon - 72\cdot\alpha\cdot\gamma\cdot\varepsilon$$

$$\zeta = (\gamma^2 - 3\cdot\beta\cdot\delta - 12\cdot\alpha\cdot\varepsilon)^3$$

$$\varepsilon = Q2^2\cdot(Q1 + Q1\cdot Q2^2 - \sqrt{1+Q2^2})^2$$

$$\delta = 2\cdot Q2\cdot(1 + 2\cdot Q1\cdot Q2)\cdot(1 + Q2^2)\cdot(Q1 + Q1\cdot Q2^2 - \sqrt{1+Q2^2}) - \{-Q2 - Q2^3 + \sqrt{1+Q2^2} - Q1\cdot(1+Q2^2)\}^2$$

$$\gamma = -(1 + 2\cdot Q1\cdot Q2)^2\cdot(1 + Q2^2)^2 - 2\cdot Q1\cdot Q2^2\cdot(1 + Q2^2)\cdot(Q1 + Q1\cdot Q2 - \sqrt{1+Q2^2}) - 2\cdot(Q1 + Q2)\cdot(1 + Q2^2)\cdot\{-Q2 - Q2^3 + \sqrt{1+Q2^2} - Q1\cdot(1+Q2^2)\} + 2\cdot\{2 + 4\cdot Q2^2 + 2\cdot Q2^4 + 2\cdot\sqrt{1+Q2^2}\cdot(Q2+Q2^3)\}$$

$$\beta = -(Q1 + Q2)^2\cdot(1 + Q2^2)^2 + 2\cdot Q1\cdot Q2\cdot(1 + 2\cdot Q1\cdot Q2)\cdot(1 + Q2^2)^2$$

$$\alpha = -Q1^2\cdot Q2^2\cdot(1 + Q2^2)^2$$

[0023]This is the result of asking from the circuit equation based on the equivalent circuit shown in Fig.2, and calculates Q3 of the whole non-contact IC card system by the relation of Q2 of Q1 and the noncontact IC card of a reader or/and a writer unit. Although an equivalent circuit and the several 1 contents naturally change with composition of a reader or/and the writer unit (equipment) 1, and the non-contact card (contiguity wireless card: IC card) 2, What is necessary is just to calculate Q3 of the whole non-contact IC card system by the relation of Q2 of Q1 and the noncontact IC card of a reader or/and a writer unit, even if it is which case.

[0024]Next, Q3 of the whole non-contact IC card system as shown in several 1. The method (assignment of Q1 and Q2) of determining Q2 of Q1 and the noncontact IC card of a reader

or/and a writer unit using the relation expressed with Q2 of Q1 and the noncontact IC card of a reader or/and a writer unit is described using Fig.5.
[0025]Fig.5 is the result of carrying out a simulation using several 1 about the relation between Q (Q2) of this IC card 4, this reader/writer 3, and Q (Q3) of the whole transmission route which comprises this IC card 4, and the relation between Q (Q2) of this IC card 4, and Q (Q1) of this reader/writer 3. In this case, the simulation of several 2 is carried out by substituting for several 1.
[0026]
[Mathematical formula 2]

$$Q1 = \frac{1}{k^2 \cdot \sqrt{1+Q2^2}} \qquad (数2)$$

[0027]Several two so that the receiving efficiency of the IC card in a target communication range may serve as the maximum in the circuit shown in Fig.2. It leads by making it equal to impedance Zc306 which looked at IC card 4 from terminal a-a'305 of the reader/writer in the communication range aiming at the antenna drive impedance 303 of reader/writer, and taking impedance matching.
[0028]In Fig.5, a turn number [T] sets a periphery to 100[mm] x100 [mm] for the antenna coil 301 of the reader/writer 3 with the spiral shape of 3, A turn number [T] sets a periphery to 77[mm] x42 [mm] for the antenna coil 401 of IC card 4 with the spiral shape of 4, and the simulation of the distance d= 30 of this IC card 4 [mm] (the value of the coupling coefficient k is k= 0.0998 at this time) is carried out to this reader/writer 3.
[0029]Q3 of the whole transmission route can be set to the bandwidth which is needed with the non-contact IC card system at a target communication speed to such a simulation result from the transfer-of-power frequency to be used. And Q1Q2 can be uniquely set up using the function shown in Fig.5 from Q3 set up.
[0030]For example, when Q3 which is Q of the whole transmission route is made or less into ten from required bandwidth to a target communication speed, Q of this reader/writer 3 is Q1=4.5-22.2, and it turns out that Q of this IC card 4 should just set to Q2=4.4 - 22.0.
[0031]Since it is the result of carrying out a simulation in Fig.5 using an expression of relations (several 2) in case transfer of power serves as the maximum like the above-mentioned, Q1 set up and Q2 become the value that transfer of power serves as the maximum. namely, the reader/writer 3 which receiving efficiency in IC card 4 is made into the maximum, and can moreover obtain sufficient bandwidth to a target communication speed and IC card 4 -- Q of each resonant circuit can be set up.
[0032]If L1, L2, Rs, RL, etc. are drawn from each Q set up in this way, for example using several 3, several 4, etc., Receiving efficiency in IC card 4 can be made into the maximum, and the reader/writer 3 and IC card 4 which can moreover obtain sufficient bandwidth to a target communication speed can be constituted.
[0033]
[Mathematical formula 3]

$$Rs = k^2 \cdot 2 \cdot \pi \cdot fo \cdot L1 \cdot \sqrt{1+Q2^2} \qquad (数3)$$

[0034]
[Mathematical formula 4]

$$Q2 = \frac{RL}{2 \cdot \pi \cdot fo \cdot L2} \qquad (数4)$$

[0035]It cannot be overemphasized that several 2 - the component C1 of a four number or others, C2, etc. are computable from the circuit equation based on the equivalent circuit shown in Fig.2.
[0036]On the other hand in an above-mentioned description, a turn number [T] sets a periphery to 100[mm] x100 [mm] for the antenna coil 301 of the reader/writer 3 with the spiral shape of 3, Although the turn number [T] set the periphery to 77[mm] x42 [mm] for the antenna coil 401 of IC card 4 with the spiral shape of 4 and the case where Q3 which is Q of the whole transmission route in d= 30 [mm] about the distance of this reader/writer 3 and this IC card 4 was made or less into ten was described, The present invention can apply the thing of not only this but various forms.
[0037]For example, when Q of the whole transmission route is made or less into 20 for a target communication range at 5 cm or less using the above-mentioned reader/writer and the antenna of an IC card, the ranges of Q of this reader/writer 3 are Q1=3 - 40, and Q of this IC card 4 should just set up a value in Q2=3 - 42. Even if it is a case where reader/writer and the antenna form of an IC card are changed, the present invention is applicable using Q of the coupling coefficient k between antennas, and the whole transmission route, or/and the ratio of communication band width and the carrier frequency of this signal transmission.
[0038]The conditions by making efficiency of transfer of power into the maximum: Instead of a two number, the relation of known Q1 and Q2 may be used, and the simulation of a relation like Fig.5 may be carried out.
[0039]Although Q3 which is Q of the whole transmission route which comprises the reader/writer 3 and IC card 4 is used, the ratio of communication band width and the carrier frequency of this signal transmission may be used as Q3.
[0040]Next, between the reader or/and the writer unit (equipment) 1 concerning the present invention, and the non-contact card (contiguity wireless card: IC card) 2. It describes about the example which applied the present invention to the 1 embodiment of equipment (system) which sets and performs transmission and reception (communication) of transfer of power and information with an electromagnetic coupling type or an electromagnetic induction type.
[0041]OSC(oscillator) 105 in which Fig.6 generates voltage with a high frequency of 13.56 MHz, The coding circuit 107 which codes send data (DATA)106 into which it input for transmitting to the contiguity wireless card 2, The modulation circuit 108 which modulates voltage with a high frequency of 13.56 MHz generated from the above-mentioned OSC105 according to the output signal of the above-mentioned coding circuit 107, The antenna coil drive circuit 109 which drives an antenna coil according to the output signal of this modulation circuit, The signal amplified in this antenna coil drive circuit is combined by the inductance combination 103, The matching circuit (feeder circuit) 102 for having the capacitor 104 and the antenna drive impedance 120, and making impedance match, Electromagnetic waves are generated in order to perform transmission of electric power, and transmission of data according to the output of this matching circuit 102, The R/W antenna coil 101 which receives the data transmitted by electromagnetic waves from the card antenna coil 201 of the contiguity wireless card 2, The filter circuit 110 which removes a noise component from the signal which was made to adjust the signal received with this R/W antenna coil 101 in the matching circuit 102, and was produced by the inductance combination 103, The receiving amplifier 111 which amplifies the signal acquired through this filter circuit 110, It has the demodulator circuit 112 which restores to the signal amplified with this receiving amplifier 111, and the decoding circuit 113 which decrypts the signal to which it restored in this demodulator circuit 112, and is outputted as received-data

(DATA)114. And the send data 106 and the received data 114 are connected to the host computer 115 via the network.
[0042]In the contiguity wireless card (non-contact card: IC card) 2, The card antenna coil 201 which receives the electromagnetic waves generated in order to perform transmission of electric power, and transmission of data from the R/W antenna coil 101 of the R/W unit 1, and generates the electromagnetic waves according to the send data by which Rhodes itching modulation was carried out, About the 13.56-MHz electric power received with this card antenna coil 201, a ready sink, From the induced voltage rectified from the consistency / rectification circuit 203 which is made to match impedance using the capacitor 221 and the resistance 220, and is adjusted about transmission and reception signals, and this the consistency/rectification circuit 203, at about 5 mW as the about [2-5V] fixed direct-current-voltage power supply 205. The input signal acquired from the power supply circuit 204 to supply, the clock extraction circuit 206 which extracts a clock from the input signal acquired from above-mentioned consistency / rectification circuit 203, the LPF circuit 207 which removes a noise component from the input signal acquired from above-mentioned consistency / rectification circuit 203, and this LPF circuit 207. The wireless chip 202 which has a Rhodes itching modulation circuit which carries out Rhodes itching modulation of the waveform shaping circuit 208 and sending signal which shape in waveform, gives and adjusts in above-mentioned consistency / rectification circuit 203, and is supplied to the card antenna coil 201, Dividing is carried out based on the clock signal extracted in the clock extraction circuit 206 of this radio chip 202. The signal acquired from the frequency divider 211 which generates the signal which uses the microcomputer 214, and the waveform shaping circuit 208 of the wireless chip 202 is decrypted. The decoding circuit 212 input into the microcomputer (CPU) 214 as decoding data (received data) and the send data obtained from the microcomputer 214 are coded. It has the microcomputer (CPU) 214 which contains the memory which memorizes the information as coding circuit 213 card input into the Rhodes itching circuit 209 of the wireless chip 202, and performs processing of transmitted and received data, transmission of the data between memories, etc., It has the chips 210, such as CPU (CPU+ interface) which receives supply of the power supply 205 stable from the power supply circuit 204 of the above-mentioned radio chip 202.
[0043]In the above-mentioned reader or/and the writer unit (equipment) 1, The resonant circuit is constituted using the capacitor 104, the antenna drive impedance 120, and the R/W antenna coil 101, The resonant circuit consists of the above-mentioned contiguity wireless cards (non-contact card: IC card) 2 using the card antenna coil 201, the capacitor 221, and the resistance 220. Even if it is the above-mentioned system, this antenna drive impedance 120 is set up like the aforementioned working example to make receiving efficiency in this contiguity wireless card (non-contact card: IC card) 2 into the maximum in a target communication range, And each Q of these resonant circuits can be set up, respectively to obtain the required bandwidth for securing sufficient signal level to a target communication speed.
[0044]Finally, since Q of a reader or/and writer equipment and Q of the contiguity wireless card were designed and set up independently conventionally, depended for the performance of the non-contact IC card system not only on both performance but on both affinity, but. If the product design on the basis of Q which a non-contact IC card system has using the present invention is performed, Since Q of the reader or/and writer equipment which are needed from the value, and Q of a contiguity wireless card can be determined and set up uniquely (with a reader or/and writer equipment) Since affinity with a contiguity wireless card can be set up, it is effective in the product design which took only the performance of product each into consideration

compared with the former becoming possible. That is, by assigning Q of a reader or/and writer equipment, and Q of a contiguity wireless card on the basis of Q which a non-contact IC card system has, when standardizing a reader or/and writer equipment, and a contiguity wireless card, it has the effect of becoming the conditions unification is very apt to take.

DESCRIPTION OF DRAWINGS

[Brief Description of the Drawings]

[Drawing 1]It is a schematic structure perspective view showing performing transfer of power and communication with an electromagnetic coupling type or an electromagnetic induction type between the reader or/and writer equipment concerning the present invention, and a contiguity wireless card (IC card).

[Drawing 2]It is the fundamental concept figure which replaced the equipment (system) which performs transfer of power and communication with an electromagnetic coupling type or an electromagnetic induction type between the reader or/and writer equipment concerning the present invention, and a contiguity wireless card (IC card) to the equivalent circuit.

[Drawing 3]It is a figure showing the relation of the transfer-of-power wave and data-communications modulated wave concerning the present invention.

[Drawing 4]It is a figure showing the principle of Q.

[Drawing 5]It is a figure showing a relation with Q of the whole transmission route which comprises a reader concerning the present invention, Q of the resonant circuit of writer equipment, Q of the resonant circuit of a contiguity wireless card (IC card) and this reader or/and writer equipment, and this contiguity wireless card (IC card).

[Drawing 6]It is a figure showing one working example in the embodiment of the reader or/and writer equipment concerning the present invention, and a contiguity wireless card (IC card).

[Explanations of letters or numerals]

1 -- a reader/writer unit, 2 -- contiguity wireless card (IC card: non-contact card), 101 -- reader/writer antenna, 102 -- matching circuit (feeder circuit), 104 -- capacitor, 105 -- power supply, 107 -- coding circuit, 108 -- modulator, 109 -- transmission amplifier, 110 -- filter circuit, 111 -- receiving amplifier, 112 -- demodulator, 113 -- decoding circuit, 115 -- host computer, 120 -- antenna drive impedance, 201 -- card antenna, 202 -- wireless chip, 203 -- consistency and rectification circuit, 204 -- power supply circuit, 206 -- clock extraction circuit, 207 -- LPF circuit, 208 -- waveform shaping circuit, 209 -- Rhodes itching circuit, 210 -- chips (CPU+ interface chip), such as CPU, 211 -- frequency divider, 212 -- decoding circuit, 213 -- coding circuit, 214 -- microcomputer (CPU), 220 -- resistance, 221 -- capacitor, 300 -- reader/writer, 301 -- antenna coil, 302 -- antenna coil tuning capacitance, 303 -- antenna coil drive impedance, 304 -- OSC (transmitter), 400 -- IC card, 401 -- antenna coil, 402 -- antenna coil tuning capacitance, 403 -- card load resistance

No documents available for this priority number.

Espacenet

Bibliographic data: JP2003179526 (A) — 2003-06-27

NON-CONTACT COMMUNICATION SYSTEM, AND AUXILIARY DEVICE AND METHOD FOR NON-CONTACT COMMUNICATION

Inventor(s): KOBAYASHI MIYUKI; KANEKO MASAYASU; HOSOMI HIROSHI ± (KOBAYASHI MIYUKI, ; KANEKO MASAYASU, ; HOSOMI HIROSHI)

Applicant(s): SONY CORP ± (SONY CORP)

Classification: - **international:** ***G06K17/00; H01Q7/00; H04B5/02;*** (IPC1-7): G06K17/00; H01Q7/00; H04B5/02

- **cooperative:**

Application number: JP20010377599 20011211

Priority number(s): JP20010377599 20011211

Also published as: JP4478366 (B2)

Abstract of JP2003179526 (A)

PROBLEM TO BE SOLVED: To extend a communication range. ; SOLUTION: A non-contact communication system comprises an R/W device 11 provided with an R/W antenna 22 resonating with a communication carrier frequency, a TAG device 12 provided with a TAG antenna 23 resonating with the communication carrier frequency, and an antenna sheet 61 operating as an antenna resonating with the communication carrier frequency. The R/W antenna 22 is electromagnetically coupled with a first coupling part 112 of the antenna sheet 61, and a second coupling part 113 is electromagnetically coupled with the TAG antenna 23 by a circulating magnetic field around a lead of the second coupling part 113 or the TAG antenna 23 produced by a line current flowing through the lead. The R/W device 11 and the TAG device 12 carry out non-contact communication with each other via the electromagnetically coupled R/W antenna 22, the antenna sheet 61, and the TAG antenna 23. ; COPYRIGHT: (C)2003,JPO

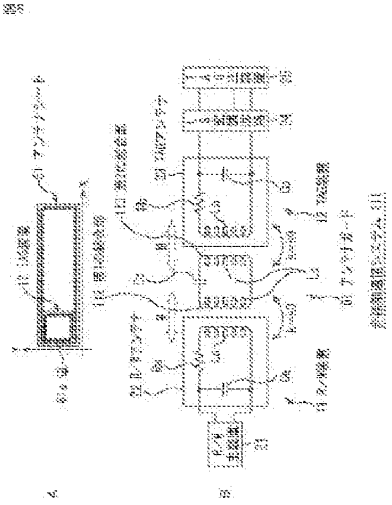

(19)日本国特許庁（ＪＰ）　(12) **公開特許公報（Ａ）**　(11)特許出願公開番号
特開2003－179526
（P2003－179526A）
(43)公開日　平成15年６月27日(2003.6.27)

(51)Int.Cl.[7]	識別記号	ＦＩ		ﾃｰﾏｺｰﾄﾞ(参考)
Ｈ０４Ｂ　5/02		Ｈ０４Ｂ　5/02		５Ｂ０５８
Ｇ０６Ｋ　17/00		Ｇ０６Ｋ　17/00	Ｆ	５Ｋ０１２
Ｈ０１Ｑ　7/00		Ｈ０１Ｑ　7/00		

審査請求　未請求　請求項の数20　ＯＬ　（全 15 頁）

(21)出願番号　特願2001－377599(P2001－377599)

(22)出願日　平成13年12月11日(2001.12.11)

(71)出願人　000002185
ソニー株式会社
東京都品川区北品川６丁目７番35号
(72)発明者　小林　幸
東京都品川区北品川６丁目７番35号　ソニー株式会社内
(72)発明者　金子　雅保
東京都品川区北品川６丁目７番35号　ソニー株式会社内
(74)代理人　100082131
弁理士　稲本　義雄

最終頁に続く

(54)【発明の名称】　非接触通信システム、並びに非接触通信補助装置および方法

(57)【要約】
【課題】　通信距離を延長することができるようにする。
【解決手段】　非接触通信システム１１１は、通信搬送周波数に共振するR/Wアンテナ２２を備えるR/W装置１１と、通信搬送周波数に共振するTAGアンテナ２３を備えるTAG装置１２と、通信搬送周波数に共振するアンテナとして動作するアンテナシート６１とからなり、R/Wアンテナ２２とアンテナシート６１の第１の結合部１１２とが電磁結合するとともに、第２の結合部１１３またはTAGアンテナ２３の導線に流れる線電流が導線の周辺に生成した循環磁界により、第２の結合部１１３とTAGアンテナ２３とが電磁結合し、R/W装置１１とTAG装置１２は、電磁結合されたR/Wアンテナ２２、アンテナシート６１、およびTAGアンテナ２３を介して相互に非接触通信する。

図8

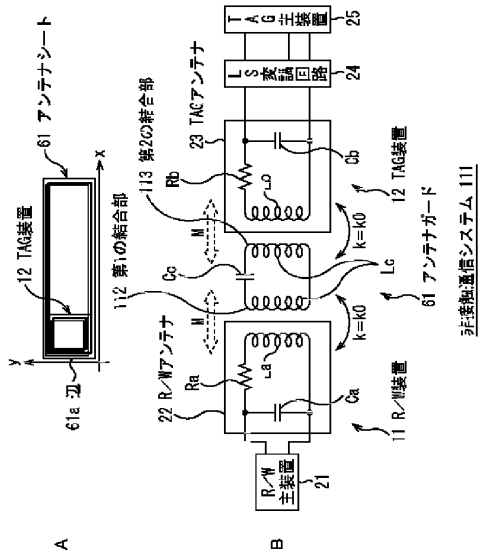

InductEV, Inc.
Exhibit 1031
Page 237

【特許請求の範囲】
【請求項１】　通信搬送周波数に共振する第１のアンテナを備える第１の非接触通信装置と、
前記通信搬送周波数に共振する第２のアンテナを備える第２の非接触通信装置と、
前記通信搬送周波数に共振する第３のアンテナを備える非接触通信補助装置とからなり、
前記第１および前記第３のアンテナが電磁結合するとともに、前記第２または前記第３のアンテナの導線に流れる線電流が前記導線の周辺に生成した循環磁界により、前記第２および前記第３のアンテナが電磁結合し、
前記第１および前記第２の非接触通信装置は、電磁結合した前記第１および前記第３のアンテナ、並びに前記第３および前記第２のアンテナを介して相互に非接触通信することを特徴とする非接触通信システム。
【請求項２】　前記第１乃至第３のアンテナは、ループアンテナであり、
前記第２のアンテナのループ面積は、前記第１および前記第３のアンテナのループ面積よりも小さいことを特徴とする請求項１に記載の非接触通信システム。
【請求項３】　前記第２のアンテナは、前記第３のアンテナの前記導線に近接して配置されることを特徴とする請求項２に記載の非接触通信システム。
【請求項４】　前記第２のアンテナは、前記第３のアンテナの前記ループ面上に配置されることを特徴とする請求項３に記載の非接触通信システム。
【請求項５】　前記第２のアンテナは、前記第２のアンテナの法線方向と前記第３のアンテナの法線方向が垂直となるように配置されることを特徴とする請求項３に記載の非接触通信システム。
【請求項６】　前記第１および前記第３のアンテナが電磁結合する場合における幾何学的結合係数の第１の値を、前記第１および前記第３のアンテナ間の第１の距離で調整するとともに、
前記第２および前記第３のアンテナが電磁結合する場合における幾何学的結合係数の第２の値を、前記第２および前記第３のアンテナのループ面積比、並びに前記第１の距離より短い前記第２および前記第３のアンテナ間の第２の距離で調整し、
前記幾何学的結合係数の前記第１および前記第２の値を、所定の値にマッチングさせることを特徴とする請求項１に記載の非接触通信システム。
【請求項７】　前記第１の非接触通信装置は、
前記通信搬送周波数の搬送信号を生成する生成手段と、
前記生成手段により生成された前記搬送信号に第１の情報を重畳して送信する搬送信号送信手段とをさらに備えることを特徴とする請求項１に記載の非接触通信システム。
【請求項８】　前記第２の非接触通信装置は、
前記第１の非接触通信装置の前記搬送信号送信手段により送信された前記搬送信号を、前記第１乃至前記第３のアンテナを介して受信する受信手段と、
前記受信手段により受信された前記搬送信号から電力を取得する電力取得手段と、
前記受信手段により受信された前記搬送信号に重畳されている前記第１の情報を取得する第１の情報取得手段と、
第２の情報を出力する情報出力手段と、
前記情報出力手段により出力された前記第２の情報に基づいて、前記第２のアンテナの受端インピーダンスを変化させる変調手段とをさらに備えることを特徴とする請求項７に記載の非接触通信システム。
【請求項９】　前記第１の非接触通信装置は、
前記第２の非接触通信装置の前記変調手段により変化された前記第２のアンテナの前記受端インピーダンスの変化量を、前記第１乃至前記第３のアンテナを介して検出する検出手段と、
前記検出手段により検出された前記第２のアンテナの前記受端インピーダンスの変化量に基づいて、前記第２の非接触通信装置の前記情報出力手段により出力された前記第２の情報を取得する第２の情報取得手段とをさらに備えることを特徴とする請求項８に記載の非接触通信システム。
【請求項１０】　通信搬送周波数に共振する第１のアンテナを備える第１の非接触通信装置と、
前記通信搬送周波数に共振する第２のアンテナを備える第２の非接触通信装置とからなり、
前記第１または前記第２のアンテナの導線に流れる線電流が前記導線の周辺に生成した循環磁界により、前記第１のアンテナと前記第２のアンテナとが電磁結合し、
前記第１および前記第２の非接触通信装置は、電磁結合した前記第１および前記第２のアンテナを介して相互に非接触通信することを特徴とする非接触通信システム。
【請求項１１】　前記第１および前記第２のアンテナは、
それぞれ異なるループ面積を有するループアンテナであることを特徴とする請求項１０に記載の非接触通信システム。
【請求項１２】　前記第１および前記第２のアンテナは、前記第１のアンテナの法線方向と前記第２のアンテナの法線方向とが垂直となるようにそれぞれ配置されることを特徴とする請求項１１に記載の非接触通信システム。
【請求項１３】　通信搬送周波数に共振する中継アンテナを備え、
前記中継アンテナは、
前記通信搬送周波数に共振する他の第１のアンテナと電磁結合されるとともに、前記中継アンテナの導線または前記通信搬送周波数に共振する他の第２のアンテナの導線に流れる線電流が前記導線の周辺に生成した循環磁界

InductEV, Inc.
Exhibit 1031
Page 238

により、前記第２のアンテナと電磁結合され、
前記第１および前記第２のアンテナ間で通信される情報および電力を非接触で中継することを特徴とする非接触通信補助装置。
【請求項１４】　前記中継アンテナは、前記通信搬送周波数に共振する共振回路を構成するキャパシタ、およびインダクタンスを有し、
前記アンテナコイルは、
前記第１のアンテナと電磁結合する第１の結合部と、
前記第２のアンテナと電磁接合する第２の結合部とを有することを特徴とする請求項１３に記載の非接触通信補助装置。
【請求項１５】　シート状の基材をさらに備え、
前記アンテナコイルと前記キャパシタとは、前記基材の面上にパターンで形成されることを特徴とする請求項１６に記載の非接触通信補助装置。
【請求項１６】　前記第１および前記第２の結合部は、同一の前記アンテナコイルの前記パターンとして構成されることを特徴とする請求項１５に記載の非接触通信補助装置。
【請求項１７】　前記基材の面は、第１の面と、前記第１の面と平行でない第２の面から構成されており、
前記アンテナコイルの前記パターンは、前記第１および前記第２の面上にわたって循環していることを特徴とする請求項１５に記載の非接触通信補助装置。
【請求項１８】　前記第１の面の法線方向と前記第２の面の法線方向とが垂直であることを特徴とする請求項１７に記載の非接触通信補助装置。
【請求項１９】　前記第２のアンテナは、前記第１または前記第２の面上に配置されるとともに、配置された前記第１または前記第２の面上に形成されている前記アンテナコイルの前記パターンに近接して配置されることを特徴とする請求項１８に記載の非接触通信補助装置。
【請求項２０】　通信搬送周波数に共振する中継アンテナを備える非接触通信補助装置の非接触通信補助方法において、
前記中継アンテナと、前記通信搬送周波数に共振する他の第１のアンテナとを電磁結合させるとともに、
前記中継アンテナの導線または前記通信搬送周波数に共振する他の第２のアンテナの導線に流れる線電流が前記導線の周辺に生成した循環磁界により、前記中継アンテナと前記第２のアンテナとを電磁結合させ、
前記第１および前記第２のアンテナにそれぞれ電磁結合された前記中継アンテナにより、前記第１および前記第２のアンテナ間で通信される情報および電力を非接触で中継することを特徴とする非接触通信補助方法。
【発明の詳細な説明】
【０００１】
【発明の属する技術分野】本発明は、非接触通信システム、並びに非接触通信補助装置および方法に関し、特に、通信距離を延長することができるようにした非接触通信システム、並びに非接触通信補助装置および方法に関する。
【０００２】
【従来の技術】非接触通信技術が応用されたIC（Integrated Circuit）カードシステムは、携帯可能なICカード、および、そのICカードに記憶されている情報を非接触で読み出すとともに、所定の情報をそのICカードに非接触で記憶させることが可能ないわゆるリーダライタ装置（以下、R/W装置と記述する）から構成されている。
【０００３】即ち、ICカードシステムは、非接触で情報の読み書きが可能な利便性の高いシステムであり、近年、定期券や認証カードに代表される従来の磁気式カードシステムの代替システム、または物流システム等として使用されている。
【０００４】また、ランダムアクセスが不可能なテープ系の記憶装置（例えば、ビデオカセットテープ）には、所定の情報をインディックス的にICメモリに記憶させ、記憶媒体へのアクセスなしに、かつ非接触で容易にその所定の情報を把握できるようにした非接触通信システムが使用されている。
【０００５】このような非接触通信システムは、R/W装置が発生する磁界内にICカード等のトランスポンダ装置（以下、TAG装置と記述する）をかざすだけで瞬時に動作することが実用上不可欠である。
【０００６】従って、非接触通信システムの実用化においては、その瞬時動作が可能な距離（R/W装置とTAG装置との間の距離）、即ち実用的な通信距離が確保される必要がある。
【０００７】一方、非接触通信技術の有用性からその応用範囲は大きく広がり、さまざまなTAG装置が考案されている。例えば、通常のカードサイズのTAG装置に比較して、非常に小型のTAG装置が考案されている。
【０００８】
【発明が解決しようとする課題】しかしながら、この超小型のTAG装置が使用される非接触通信システムにおいては、通信距離が非常に短距離に限定され、実用的な通信距離の確保が困難であるという課題があった。
【０００９】本発明は、このような状況に鑑みてなされたものであり、通信距離を延長することができるようにするものである。
【００１０】
【課題を解決するための手段】本発明の第１の非接触通信システムは、通信搬送周波数に共振する第１のアンテナを備える第１の非接触通信装置と、通信搬送周波数に共振する第２のアンテナを備える第２の非接触通信装置と、通信搬送周波数に共振する第３のアンテナを備える非接触通信補助装置とからなり、第１および第３のアンテナが電磁結合するとともに、第２または第３のアンテナの導線に流れる線電流が導線の周辺に生成した循環磁

界により、第２および第３のアンテナが電磁結合し、第１および第２の非接触通信装置は、電磁結合した第１および第３のアンテナ、並びに第３および第２のアンテナを介して相互に非接触通信することを特徴とする。

【００１１】第１乃至第３のアンテナは、ループアンテナであり、第２のアンテナのループ面積は、第１および第３のアンテナのループ面積よりも小さいようにすることができる。

【００１２】第２のアンテナは、第３のアンテナの導線に近接して配置されるようにすることができる。

【００１３】第２のアンテナは、第３のアンテナのループ面上に配置されるようにすることができる。

【００１４】第２のアンテナは、第２のアンテナの法線方向と第３のアンテナの法線方向が垂直となるように配置されるようにすることができる。

【００１５】第１および第３のアンテナが電磁結合する場合における幾何学的結合係数の第１の値を、第１および第３のアンテナ間の第１の距離で調整するとともに、第２および第３のアンテナが電磁結合する場合における幾何学的結合係数の第２の値を、第２および第３のアンテナのループ面積比、並びに第１の距離より短い第２および第３のアンテナ間の第２の距離で調整し、幾何学的結合係数の第１および第２の値を所定の値にマッチングさせるようにすることができる。

【００１６】第１の非接触通信装置は、通信搬送周波数の搬送信号を生成する生成手段と、生成手段により生成された搬送信号に第１の情報を重畳して送信する搬送信号送信手段とをさらに備えるようにすることができる。

【００１７】第２の非接触通信装置は、第１の非接触通信装置の搬送信号送信手段により送信された搬送信号を、第１乃至第３のアンテナを介して受信する受信手段と、受信手段により受信された搬送信号から電力を取得する電力取得手段と、受信手段により受信された搬送信号に重畳されている第１の情報を取得する第１の情報取得手段と、第２の情報を出力する情報出力手段と、情報出力手段により出力された第２の情報に基づいて、第２のアンテナの受端インピーダンスを変化させる変調手段とをさらに設けるようにすることができる。

【００１８】第１の非接触通信装置は、第２の非接触通信装置の変調手段により変化された第２のアンテナの受端インピーダンスの変化量を、第１乃至第３のアンテナを介して検出する検出手段と、検出手段により検出された第２のアンテナの受端インピーダンスの変化量に基づいて、第２の非接触通信装置の出力手段により出力された第２の情報を取得する第２の情報取得手段とをさらに設けるようにすることができる。

【００１９】本発明の第１の非接触通信システムにおいては、通信搬送周波数に共振する第１の非接触通信装置の第１のアンテナと、通信搬送周波数に共振する非接触通信補助装置の第３のアンテナとが電磁結合されるとともに、通信搬送周波数に共振する第２の非接触通信装置の第２のアンテナ、または第３のアンテナの導線に流れる線電流が導線の周辺に生成した循環磁界により、第２および第３のアンテナが電磁結合され、電磁結合された第１および第３のアンテナ、並びに第３および第２のアンテナを介して、第１および第２の非接触通信装置間で相互に非接触通信される。

【００２０】本発明の第２の非接触通信システムは、通信搬送周波数に共振する第１のアンテナを備える第１の非接触通信装置と、通信搬送周波数に共振する第２のアンテナを備える第２の非接触通信装置とからなり、第１または第２のアンテナの導線に流れる線電流が導線の周辺に生成した循環磁界により、第１のアンテナと第２のアンテナとが電磁結合し、第１および第２の非接触通信装置は、電磁結合した第１および第２のアンテナを介して相互に非接触通信することを特徴とする。

【００２１】第１および第２のアンテナは、それぞれ異なるループ面積を有するループアンテナであるようにすることができる。

【００２２】第１および第２のアンテナは、第１のアンテナの法線方向と第２のアンテナの法線方向が垂直となるようにそれぞれ配置されるようにすることができる。

【００２３】本発明の第２の非接触通信システムにおいては、通信搬送周波数に共振する第１の非接触通信装置の第１のアンテナ、または通信搬送周波数に共振する第２の非接触通信装置の第２のアンテナの導線に流れる線電流が導線の周辺に生成した循環磁界により、第１および第２のアンテナが電磁結合され、電磁結合された第１および第２のアンテナを介して、第１および第２の非接触通信装置間で相互に非接触通信される。

【００２４】本発明の非接触通信補助装置は、通信搬送周波数に共振する中継アンテナを備え、中継アンテナは、通信搬送周波数に共振する他の第１のアンテナと電磁結合されるとともに、中継アンテナの導線または通信搬送周波数に共振する他の第２のアンテナの導線に流れる線電流が導線の周辺に生成した循環磁界により、第２のアンテナと電磁結合され、第１および第２のアンテナ間で通信される情報および電力を非接触で中継することを特徴とする。

【００２５】中継アンテナは、通信搬送周波数に共振する共振回路を構成するキャパシタ、およびインダクタンスとして作用するアンテナコイルを有し、アンテナコイルは、第１のアンテナと電磁結合する第１の結合部と、第２のアンテナと電磁接合する第２の結合部とを有するようにすることができる。

【００２６】シート状の基材をさらに設け、アンテナコイルとキャパシタは、基材の面上にパターンで形成されるようにすることができる。

【００２７】第１および第２の結合部は、同一のアンテナコイルのパターンとして構成されるようにすることが

できる。

【００２８】基材の面は、第１の面と、第１の面と平行でない第２の面から構成されており、アンテナコイルのパターンは、第１および第２の面上にわたって循環しているようにすることができる。

【００２９】第１の面の法線方向と第２の面の法線方向とが垂直であるようにすることができる。

【００３０】第２のアンテナは、第１または第２の面上に配置されるとともに、配置された第１または第２の面上に形成されているアンテナコイルのパターンに近接して配置されるようにすることができる。

【００３１】本発明の非接触通信補助方法は、通信搬送周波数に共振する中継アンテナと、通信搬送周波数に共振する他の第１のアンテナとを電磁結合させるとともに、中継アンテナの導線または通信搬送周波数に共振する他の第２のアンテナの導線に流れる線電流が導線の周辺に生成した循環磁界により、中継アンテナと第２のアンテナとを電磁結合させ、第１および第２のアンテナにそれぞれ電磁結合された中継アンテナにより、第１および第２のアンテナ間で通信される情報および電力を非接触で中継することを特徴とする。

【００３２】本発明の非接触通信補助装置および方法においては、通信搬送周波数に共振する中継アンテナと、通信搬送周波数に共振する他の第１のアンテナとが電磁結合されるとともに、中継アンテナの導線または通信搬送周波数に共振する他の第２のアンテナの導線に流れる線電流が導線の周辺に生成した循環磁界により、中継アンテナと第２のアンテナとが電磁結合され、第１および第２のアンテナとそれぞれ電磁結合された中継アンテナにより、第１および第２のアンテナ間で通信される情報および電力が非接触で中継される。

【００３３】

【発明の実施の形態】図１は、本発明が適用される非接触通信基礎システム１の構成例を表している。

【００３４】図１に示されるように、非接触通信基礎システム１は、R/W主装置２１およびR/Wアンテナ２２からなるR/W装置１１と、TAGアンテナ２３、ＬＳ（Load Switching）変調回路２４、およびTAG主装置２５からなるTAG装置２５とが、相互に非接触通信するシステムである。

【００３５】R/W主装置２１には、図示はしないが、通信を制御する為のマイコン、マンチェスター符号等へ符号化する符号化回路、マンチェスター符号等を復号するための復号回路、所定の通信搬送周波数の搬送波（搬送信号）を生成する搬送波生成回路、ASK（Amplitude Shift Keying）変調回路、ASK復調回路、および電力増幅回路等が設けられている。なお、R/W主装置２１として、従来のR/W主装置が使用されることができる。従って、R/W主装置２１の構成要素の構成や動作は当業者に容易に理解できるため詳しい説明は省略する。

【００３６】R/Wアンテナ２２は、抵抗Ra、コイルLa、およびキャパシタCaから構成される共振回路を有している。即ち、R/Wアンテナ２２は、そのコイルLaの部分がループアンテナとして動作するとともに、かつ所定の通信搬送周波数に共振するLCR共振回路としても動作する。

【００３７】TAGアンテナ２３は、R/Wアンテナ２２と同様に、抵抗Rb、コイルLb、およびキャパシタCbから構成される共振回路を有している。即ち、TAGアンテナ２３は、そのコイルLb部分がR/Wアンテナ２２と相互インダクタンスMで電磁結合するためのループアンテナとして動作するとともに、かつ所定の通信搬送周波数に共振すLCRC共振回路としても動作する。

【００３８】TAG主装置２５には、図示はしないが、IC用電源生成回路、クロック抽出回路、ロジック回路、ＡＳＫ復調回路、およびデータを記憶する為のメモリ等が設けられている。なお、TAG主装置２５として、従来のTAG主装置が使用されることができる。従って、TAG主装置２５の構成要素の構成や動作は当業者に容易に理解できるため詳しい説明は省略する。

【００３９】ＬＳ変調回路２５は、負荷抵抗RcとMOS（Metal Oxide Semiconductor）スイッチ３８とが直列に接続された回路である。

【００４０】次に、非接触通信基礎システム１の動作を説明する。

【００４１】TAG装置１２のTAGアンテナ２３が、R/W装置１１のR/Wアンテナ２２に所定の距離（通信距離）で対向されて配置されると、TAGアンテナ２３とR/WアンテナＡ２２とは、R/WアンテナＡ２２の法線方向に発生された磁界により相互インダクタンスMで電磁結合するとともに、R/W主装置２１より出力された通信搬送信号の通信搬送周波数にそれぞれ共振する。これにより、R/W装置１１とTAG装置１２とは、R/WアンテナＡ２２およびTAGアンテナ２３を介して、相互に非接触通信することができるようになる。

【００４２】R/W主装置２１より送信されるデータ（以下、第1の情報と称する）は、例えば、R/W主装置２１において、符号化されるとともにかつASK変調され、ASK変調信号（第１の情報が重畳された通信搬送信号）として、電磁結合しているR/WアンテナＡ２２およびTAGアンテナ２３、並びにＬＳ変調回路２４を介して、TAG主装置２５に供給される。

【００４３】TAG主装置２５において、供給されたASK変調信号は、復調されるとともに復号されて元の第１の情報となり、この第１の情報がメモリに記憶されるデータであった場合、第１の情報はメモリに記憶され、一方、この第１の情報が情報読み出し指示データであった場合、第１の情報に基づいて、メモリより所定の情報が読み出される。

【００４４】なお、ASK変調信号が復調された際に除去

された直流成分の信号はIC（図示せず）等の電源となる。

【００４５】これらのレスポンスまたはメモリから読み出されたデータ（以下、第２の情報と称する）は、以下のようにTAG装置１２からR/W装置１１に供給される。

【００４６】即ち、ＬＳ変調回路２４において、第２の情報（０または１のデータ）に応じてスイッチ３８がスイッチングされ、R/Wアンテナ２２からみたTAG装置１２のアンテナの等価的な負荷（TAGアンテナ２３とＬＳ変調回路２４（抵抗Rc）とからなる回路の負荷）が変動される。

【００４７】この負荷変動は、R/W装置１１においては、R/Wアンテナ２２とTAGアンテナ２３との間の非接触な電磁結合により、R/Wアンテナ２２の負荷変動として現れる。従って、R/W主装置２１は、この負荷変動を、通信搬送信号の振幅変動成分、即ちASK変調信号（第２の情報が重畳された通信搬送信号）として検出し、これを復調するとともに復号することで、第２の情報を取得する。

【００４８】このように、非接触通信基礎システム１は、電磁結合を利用して非接触通信を行うシステムであり、この電磁結合の強さが、非接触通信基礎システム１の通信距離に密接に関連している。

【００４９】そこで、本出願人は、上述したようなR/WアンテナＺ２とTAGアンテナ２３との間の電磁結合の様相をいわゆる複同調として解析した。以下、その解析結果について説明する。

【００５０】即ち、これらのアンテナ間の電磁結合には、それぞれのアンテナ回路の損失Q（Quality Factor）により物理的に決定される臨界時の結合係数（以下、臨界結合係数k0と称する）が存在し、これがちょうどアンテナ形状、距離等の幾何学的要因で決定される結合係数（以下、幾何学的結合係数kと称する）と一致した時点で最大の伝達ゲインとなることを利用して、本出願人は、R/WアンテナＺ２とTAGアンテナ２３との間の電磁結合の様相を解析した。

【００５１】具体的には、臨界結合係数k0は、それぞれのアンテナ回路のQ値によって次式（１）に示されるように求められるアンテナの電気的特性を表す係数である。

【００５２】

【数１】

$$k0 = \frac{1}{\sqrt{Q_1 \cdot Q_2}} \quad \cdots (1)$$

【００５３】ただし、Q1は、R/WアンテナＺ２のQ値を表しており、また、Q2は、TAGアンテナ２３のQ値を表している。

【００５４】一方、幾何学的結合係数kは、上述したように、両者のアンテナの幾何学的な配置に対応する係数である。

【００５５】一方のアンテナから発生された全ての磁束がもう一方のアンテナを横切るとき、即ち、同じ大きさの２つのアンテナがそれぞれ対抗して接し合わせられたときに、幾何学的結合係数kの値は最大値である1をとり、また、図２Ａに示されるように、２つのアンテナが１つの軸上の真中に並べられたとき（２つのアンテナのそれぞれの幾何学的センターが一致したとき）、幾何学的結合係数kの値は、次式（２）に示されるように概算される。

【００５６】

【数２】

$$k(x) = \frac{r_1^2 \cdot r_2^2}{\sqrt{r_1 \cdot r_2} \cdot \left(\sqrt{x^2 + r_2^2}\right)^3} \quad \cdots (2)$$

【００５７】ただし、図２Ａに示されるように、r1は、R/WアンテナＺ２の径（コイルLaのループ径）を、r2は、TAGアンテナ２３の径（コイルLbのループ径）を、ｘは、R/WアンテナＺ２とTAGアンテナ２３との間の距離を、それぞれ表している。即ち、k(x)は、R/WアンテナＺ２とTAGアンテナ２３との間の距離xにおける幾何学的結合係数kを表している。

【００５８】R/WアンテナＺ２とTAGアンテナ２３との間の距離xと、この式（２）により演算された幾何学的結合係数k(x)との対応関係が、図２Ｂに示されている。

【００５９】ただし、曲線（アンテナ径3.6mm）４１は、R/WアンテナＺ２とTAGアンテナ２３の径がそれぞれ3.6ｍｍである場合（両アンテナの径がそれぞれ小さい場合）の幾何学的結合係数k(x)を表している。

【００６０】曲線（アンテナ径10mm）４２は、R/WアンテナＺ２とTAGアンテナ２３の径がそれぞれ10mmである場合（両アンテナの径がそれぞれ大きい場合）の幾何学的結合係数k(x)を表している。

【００６１】曲線（アンテナ径3.6mmと10mmの組合せ）４３は、R/WアンテナＺ２およびTAGアンテナ２３のうち、一方の径が3.6mmであり、もう一方の径が10mmである場合（大きい径と小さい径とが組合された場合）の幾何学的結合係数k(x)を表している。

【００６２】さて、R/WアンテナＺ２およびTAGアンテナ２３のような共振系アンテナのQ値は一般的に高い値であるため、その結果、式（１）に示されるように、臨界結合係数k0の値は小さい値となる。従って、非接触通信基礎システム１においては、最適な通信状態となる幾何

InductEV, Inc.
Exhibit 1031
Page 242

学的結合係数kの値として、小さい値が適用されることができる。例えば、R/Wアンテナ２２およびTAGアンテナ２３のQ値がそれぞれ10とされた場合、臨界結合係数k0の値は0.1となり、非接触通信基礎システム１は、幾何学的結合係数kの値が0.1のとき最適な通信状態となる。

【００６３】このように、非接触通信基礎システム１が使用される場合（共振系が構成されているシステムが使用される場合）、共振系が構成されていないシステムが使用される場合に比べて、臨界結合係数k0の値は小さくなり、その結果、最適な通信状態となる幾何学的結合係数kの値も小さい値が適用されることができる。

【００６４】なお、幾何学的結合係数ｋ(x)と２つのアンテナ間の距離ｘとの関係の様相は、曲線（アンテナ径3.6mmと10mmの組合せ）４３と曲線（アンテナ径3.6mm）４１とでは大差がない。即ち、いずれか一方（片方）のアンテナのみが大きくされても、最適な通信状態となる幾何学的結合係数ｋの値が得られる通信距離（２つのアンテナ間の距離）xはさほど延長されない。

【００６５】一方、最適な通信状態となる幾何学的結合係数ｋの値が大きい場合（例えば、曲線４３と曲線４１との比較では、幾何学的結合係数kが0.15以上の場合）、片方のアンテナのみが大きくされると、最適な通信状態となる幾何学的結合係数ｋが得られる通信距離xはむしろ短くなる。

【００６６】このように（図２Ｂに示されるように）、超小型のTAG装置１２が使用される非接触通信システム１においては、即ち、TAGアンテナ２３が通常のそれより小さい場合、通信に十分な幾何学的結合係数kの値が得られるように、R/W装置１１と超小型のTAG装置１２とが通常より近距離に配置される（R/Wアンテナ２２とTAGアンテナ２３との間の距離xが短くされる）必要がある。

【００６７】そこで、本出願人は、中継アンテナ（通信範囲を広げることが目的とされたアンテナ）として、例えば、図３に示されるようなアンテナシート６１を採用した。

【００６８】即ち、アンテナシート６１とは、例えば、アンテナコイルLcとキャパシタCcとがシート状の基板７１にパターンとして形成されたものである。

【００６９】なお、キャパシタCcは、薄型のものであればその形式は限定されない。例えば、チップ部品などでもよい。

【００７０】このアンテナシート６１は、アンテナコイルLcの部分がループアンテナとして動作するとともに、図３Ｂに示されるように、アンテナコイルLcおよびキャパシタCcから構成される閉回路、即ち、所定の通信搬送周波数に共振するLC共振回路としても動作する。

【００７１】なお、この例においては、アンテナシート６１の大きさ（コイルLcのループ径（ループ面積））は、R/Wアンテナ２２の大きさ（コイルLaのループ径（ループ面積））とほぼ等しいものとされる。

【００７２】また、この例においては、アンテナシート６１は、シートとして構成されているが、上述した２つの動作（ループアンテナとしての動作、およびLC共振回路としての動作）が可能な構成であれば、その構成は限定されない。

【００７３】ところで、仮にTAGアンテナ２３とR/Wアンテナ２２の大きさ（それぞれのコイルLbとLaのループ径（ループ面積））がほぼ等しい場合、即ち、アンテナシート６１とTAGアンテナ２３の大きさ（それぞれのコイルLcとLbのループ径（ループ面積））がほぼ等しい場合であれば、アンテナシート６１は、図４に示されるように配置されることが理論上可能である。

【００７４】即ち、アンテナシート６１、TAGアンテナ２３、およびR/Wアンテナ２２（それぞれのコイルLc、Lb、およびLaのループ面）が平行になるとともに、それぞれのアンテナの幾何学的センター（それぞれのコイルLc、Lb、およびLaのループの中心）からのそれぞれの法線が一致されるように、アンテナシート６１が、TAGアンテナ２３とR/Wアンテナ２２の間に配置されることで、アンテナシート６１は理論上中継アンテナの機能を果たすことができる。

【００７５】しかしながら、超小型のTAG装置１２が使用される非接触通信基礎システム１は、上述したように、TAGアンテナ２３とR/Wアンテナ２２の大きさ（それぞれのコイルLbとLaのループ径（ループ面積））が甚だ異なる。

【００７６】従って、超小型のTAG装置１２が使用される非接触通信基礎システム１にアンテナシート６１が適用された場合、アンテナシート６１とTAGアンテナ２３との大きさ（それぞれのコイルLcとLbのループ径（ループ面積））は甚だ異なることになり、図２Ｂの曲線（アンテナ径3.6mmと10mmの組合せ）４３に示されるように、アンテナシート６１が図４に示されるように配置されても、十分な幾何学的結合係数ｋの値は得られない。

【００７７】即ち、超小型のTAG装置１２が使用される非接触通信システム１に対して、アンテナシート６１が図４に示されるように配置された場合、アンテナシート６１は、中継アンテナとしての機能を十分に発揮することができない。

【００７８】なお、図４に示されるような配置は、実際には、R/Wアンテナ２２とTAGアンテナ２３との間の空間に、アンテナシート６１が配置されることを意味している。即ち、仮に図４に示される配置が実用性のある配置だとされても、製造者等は、アンテナシート６１を図４に示されるように実際に配置することは困難である。

【００７９】そこで、本出願人は、幾何学的結合係数kを臨界結合係数k0にマッチングさせるという観点から、TAGアンテナ２３とアンテナシート６１との大きさが甚だ異なる場合のアンテナシート６１の配置位置について

InductEV, Inc.
Exhibit 1031
Page 243

解析し、アンテナシート６１の適切な配置位置を解明した。以下、この解析結果、即ち、アンテナシート６１の適切な配置位置について説明する。

【００８０】なお、前提条件として、上述したように、TAGアンテナ２３に対して、R/Wアンテナ２２が甚だ大きいものとされ、アンテナシート６１は、R/Wアンテナ２２に対して十分な幾何学的結合係数kの値が得られることを目的として、R/Wアンテナ２２と同等程度の大きさを持つものとされる。

【００８１】なお、R/Wアンテナ２２とTAGアンテナ２３とは双対の関係にあることから、R/Wアンテナ２２とTAGアンテナ２３とが置き換えられても以下の議論は成立する。

【００８２】それぞれの大きさが甚だ異なるTAGアンテナ２３とアンテナシート６１とが使用される場合、システムが非共振系であると臨界結合係数k0の値は大きな値となるため、十分な幾何学的結合係数kの値が得られない。

【００８３】そこで、システムが共振系となるように、ここでは、TAGアンテナ２３とアンテナシート６１とが、図５Ａに示されるように、それぞれ配置されるものとする。

【００８４】即ち、アンテナシート６１とTAGアンテナ２３とのそれぞれの中心軸（幾何学的センター）が合わせられて配置された位置（TAGアンテナ２３の中心が、（０，０，０）に配置された位置）が基準とされた場合、TAGアンテナ２３が、x軸方向にx1だけ、またはz軸方向にz1だけシフトされて配置される（TAGアンテナ２３の中心が、座標（ｘ１，０，０）、または（０，０，z1）に配置される）ものとする。

【００８５】図５Bは、このようにアンテナシート６１とTAGアンテナ２３とが配置された場合におけるアンテナシート６１とTAGアンテナ２３との幾何学的結合係数kの様相を表している。

【００８６】図５Bにおいて、曲線（ｘシフト）８１は、TAGアンテナ２３がx軸方向にx1だけシフトされて配置された場合におけるアンテナシート６１とTAGアンテナ２３との幾何学的結合係数k(x1)（x1は、０乃至３０mm）を表しており、一方、曲線（ｚシフト）８２は、TAGアンテナ２３がｚ軸方向にｚ1だけシフトされて配置された場合におけるアンテナシート６１とTAGアンテナ２３との幾何学的結合係数k(z1)（z1は、０乃至３０mm）を表している。

【００８７】曲線（ｚシフト）８２に示されるように、TAGアンテナ２３がz軸方向にシフトされて配置された場合、または、曲線（ｘシフト）８１に示されるように、TAGアンテナ２３がx軸方向にさほどシフトされずに配置された場合（TAGアンテナ２３がアンテナシートの幾何学的センター付近に配置された場合）、十分な幾何学的結合係数kの値は得られない。

【００８８】一方、８１－１点に示されるように、TAGアンテナ２３が、x軸方向に約17mmシフトされて配置されたとき、即ち、アンテナシート６１の同一平面上、かつアンテナシート６１の導線の近傍に配置されたとき、比較的大きな幾何学的結合係数kの値（k（17）＝0.08）が得られる。

【００８９】このように配置されると、TAGアンテナ２３は、アンテナシート６１の導線の周囲に発生されるループ磁界の影響をより強く受けることができるようになる。即ち、TAGアンテナ２３の平面（TAGアンテナ２３のコイルLbのループ面）が、アンテナシート６１の導線に流れる線電流により生成された磁束ループをより多く横切るように、TAGアンテナ２３が配置されれば、電磁結合がより強くなる。

【００９０】具体的には、図６Ａに示されるように、アンテナシート６１（アンテナコイルLc）は、R/Wアンテナ２２からの磁界Ｈｒを受け、電圧が誘起され、誘導電流irを発生する。この誘導電流irが、アンテナシート６１の導線の周囲にループ磁界Ｈａをつくる。

【００９１】従って、図５においては、TAGアンテナ２３とアンテナシート６１とが同一平面上である場合の解析のみが行われたが、上述したように、アンテナシート６１のアンテナコイルLcの導線周囲のループ磁界Haの利用が可能な位置であれば、TAGアンテナ２３の配置位置は限定されない。即ち、TAGアンテナ２３とアンテナシート６１とが同一平面に配置される必要はない。

【００９２】例えば、図６Bに示されるように、TAGアンテナ２３は、アンテナシート６１の長方形のアンテナパターン（アンテナコイルLc）のうち、いずれかの一辺に接するとともに、その一辺の周囲に発生されるループ磁界Ｈａに大きく作用されるように設置されるとよい。この場合、アンテナシート６１とTAGアンテナ２３との幾何学的結合係数kの値が最も高められる。

【００９３】またこのようなTAGアンテナ２３の配置（図６Ｂに示されるような配置）は、図６Ｃに示されるように、逆にTAGアンテナ２３からの磁界Htが、アンテナシート６１に効率良く伝達される。

【００９４】なお、上述したように（図５Ｂの曲線（ｘシフト）８１に示されるように）、TAGアンテナ２３とアンテナシート６１とが、図６Bに示されるように配置され（例えば、TAGアンテナ２３の中心が、座標（１７、０、０）に配置され）、幾何学的結合係数kの値が最大値となった場合（８１－１点に示されるように、k(17)＝0.08となった場合）であっても、幾何学的結合係数kの値は遥か1には満たないが、TAGアンテナ２３とアンテナシート６１とが共振系を有することで比較的小さな結合係数においても十分な誘起電圧が得られることができる。

【００９５】一方、TAGアンテナ２３がアンテナシート６１の幾何学的センターに配置されていた場合（TAGア

ンテナ２３の中心が（０、０、０）に配置されていた場合）、アンテナシート６１の導線周囲に発生されるループ磁界HaのTAGアンテナ２３に対する影響、およびTAGアンテナ２３からの磁界Htのアンテナシート６１に対する影響が非常に小さくなり、その結果、幾何学的結合係数kの値はむしろ小さくなる（k(0)=約0.015となる）。

【００９６】これはTAGアンテナ２３とアンテナシート６１との大きさが非常に異なる場合において特徴的なことである。

【００９７】ところで、非接触通信技術は非常に応用範囲が広く、様々な応用技術が提案されているが、上述したように、いったん設計された非接触通信システムにおいては、R/Wアンテナ２２、またはTAGアンテナ２３の仕様が決定された時点でシステムの通信距離が規定されてしまう。

【００９８】即ち、TAGアンテナ２３が小さく設計された非接触通信システムにおいては、その後いくらR/Wアンテナ２２が大きく設計されたとしても、図２Ｂの曲線（アンテナ径3.6mmと10mmの組合せ）４３に示されるように、TAGアンテナ２３が小さい限り通信距離はTAGアンテナ２３に見合って非常に短くなってしまう。逆も同様であり、図２Ｂの曲線（アンテナ径3.6mm）４１と曲線（アンテナ径10mm）４２とに示されるように、通信距離が拡大されるためには、双方のアンテナが大型化される必要がある。

【００９９】しかしながら、R/W装置１１は機器の設計自由度があり、大きなアンテナを有すことも可能であるが、一方、規格化されたカセットなどのTAG装置１２は、機器の設計自由度が小さく、大きなアンテナを有することは困難である。

【０１００】そこで、上述したように、共振現象を利用したアンテナシート６１が非接触通信基礎システム１に用いられるとともに、かつそれが適切にTAGアンテナ２３の近傍に配置されることによって、R/WアンテナＡ１とTAGアンテナ２３とが、アンテナシート６１を介して十分な通信距離で通信することが可能になる。

【０１０１】また、アンテナシート６１がTAGアンテナ２３の近傍に配置されることによって、TAGアンテナ２３とアンテナシート６１が一緒に取り扱われることができる。

【０１０２】ただし、アンテナシート６１が中継アンテナとして有効に利用されるためには、アンテナシート６１とR/Wアンテナ２２との幾何学的結合係数kの値と、アンテナシート６１とTAGアンテナ２３との幾何学的結合係数kの値とがそれぞれ適切に調整される必要がある。

【０１０３】この例においては、これら２つの幾何学的結合係数kの値は、それぞれ臨界結合係数k0の値にマッチングされるものとする。このアンテナシート６１による臨界結合係数kと幾何学的結合係数k0のマッチングの様子が、図７に示されている。

【０１０４】なお、図７Ｂは、上述した図５Bに対応し、一方、図７Cは、上述した図2Bに対応している。

【０１０５】図７Cの曲線k(z)１０２に示されるように、共振の効果によって下げられた臨界結合係数k0の値に対して、R/Wアンテナ２２とアンテナシート６１とでは遠距離z1において幾何学的結合係数k(z)がマッチングされ、一方、図７Bの曲線k(x)１０１に示されるように、アンテナシート６１とTAGアンテナ２３とでは甚だ異なるアンテナ径の大きさの差異が利用されて、アンテナシート６１の導線の近傍において幾何学的結合係数k(x)がマッチングされている。

【０１０６】ところで、アンテナシート６１とTAGアンテナ２３との大きさが同程度である場合、アンテナシート６１とTAGアンテナ２３とが近傍に配置されると、両者は密結合の状態となり、共振周波数が通信搬送周波数から外れてしまい、通信搬送周波数において十分な共振が得られないという現象が起こる。即ち、アンテナシート６１とTAGアンテナ２３との近傍におけるマッチングに関しては、両者の大きさの違いが非常に効果的であることがわかる。

【０１０７】このようにしてマッチングされたそれぞれのアンテナは、実際には、例えば、図７Ａに示されるように配置される。

【０１０８】即ち、アンテナシート６１が基準とされた場合、R/Wアンテナ２２は、その中心とアンテナシート６１の中心との距離がz1となるとともに、その面（コイルLaのループ面）とアンテナシート６１の面（コイルLcのループ面）とが平行になるように配置される（R/Wアンテナ２２とアンテナシート６１とは、距離ｚ１だけ離れて、対向するようにそれぞれ配置される）。

【０１０９】また、TAGアンテナ２３は、アンテナシート６１の中心との距離がx1に、即ち、アンテナシート６１のアンテナパターン（コイルLc）の任意の一辺の近傍に配置されるとともに、そのアンテナパターンの一辺（導線）の周囲のループ磁界に大きく作用されるように配置される。

【０１１０】具体的には、図８Ａに示されるように、例えば、TAG装置１２は、アンテナシート６１の辺６１ａに接するように同一平面上に配置されることができる。

【０１１１】このように、図１の非接触通信基礎システム１にアンテナシート６１が付加された非接触通信システム１１１は、図８Ｂに示されるように構成される。なお、図８Ｂにおいて、図１の非接触通信基礎システム１に対応する部分には、対応する符号が付してある。

【０１１２】この構成例においては、上述したように、中継アンテナであるアンテナシート６１が、R/W装置１１のR/WアンテナＡ２とTAG装置１２のTAGアンテナ２３との間に配置されている。

【０１１３】アンテナシート６１は、上述したように、コイルLcおよびキャパシタCcからなる閉回路として形成

InductEV, Inc.
Exhibit 1031
Page 245

されている。即ち、アンテナシート６１は、そのコイルLcの第１の結合部１１２がR/Wアンテナ２２と相互インダクタンスMで電磁結合するためのループアンテナとして動作するとともに、そのコイルLcの第２の結合部１１３がTAGアンテナ２３と相互インダクタンスMで電磁結合するためのアンテナとして動作し、さらに所定の通信搬送周波数に共振するLC共振回路としても動作する。

【０１１４】第１の結合部１１２は、図８Ａでは、アンテナシート６１のアンテナパターン（コイルLc）のループ全体に相当し、一方、第２の結合部１１３は、主にアンテナシート６１のアンテナパターンの１つの辺６１ａに相当する。即ち、上述したように、第２の結合部１１３の導線に流れる線電流が生成するループ磁界により、第２の結合部１１３とTAGアンテナ２３（コイルLb）とが電磁結合される。

【０１１５】その他の構成は、図１と同様である。

【０１１６】アンテナシート６１の動作は、上述した通りであり、また、非接触通信システム１１１の動作は、基本的に図１の非接触通信基礎システム１の動作と同様であるので、それらの説明は省略する。

【０１１７】なお、アンテナシート６１とTAGアンテナ１２とは、上述した条件、即ち、アンテナシート６１のアンテナパターン（コイルLc）の任意の辺の導線、またはTAGアンテナ１２のコイルLbの導線に流れる電流がこれらの導線の周辺に生成した循環磁界により、アンテナシート６１とTAGアンテナ１２が相互インダクタンスMで電磁結合されるという条件が満たされれば、自在に配置されることができる。

【０１１８】例えば、アンテナシート６１とTAGアンテナ１２とはそれぞれ、図９に示されるように配置されることができる。

【０１１９】図９Ａは、TAG装置１２とアンテナシート６１－１がそれぞれ独立した平面上に配置された例である。ただし、図８Ｂの第２の接続部１１３は、主にアンテナパターン（コイルLc）の辺６１－１ａに相当する。

【０１２０】図９Ｂは、アンテナシート６１－２の基板（シート）７１が、Ｌ字型の平面、即ち、ｘ－ｙ平面に平行な面６１－２ａとｘ－ｚ平面に平行な面６１－２ｂとから構成される平面状のシートにより形成された例である。TAG装置１２は、例えば、面６１－２ｂ上、かつアンテナパターン（コイルLc）の辺６１－２ｃに接するように配置される。即ち、図８Ｂの第２の接続部１１３は、主にアンテナパターン（コイルLc）の辺６１－２ｃに相当する。

【０１２１】図９Ｃは、図９Ｂと同様に、アンテナシート６１－３の基板（シート）７１が、Ｌ字型の平面、即ち、ｘ－ｙ平面に平行な面６１－３ａとｘ－ｚ平面に平行な面６１－３ｂとから構成される平面状のシートにより形成された例である。ただし、面６１－３ｂは、図９Ｂの面６１－２ｂよりも小さく、例えば、TAG装置１２が丁度収まる程度の大きさに構成される。即ち、TAG装置１２は、例えば、面６１－３ｂ上、かつアンテナパターン（コイルLc）の辺６１－３ｃ、辺６１－３ｄ、および辺６１－３ｅの３辺に接するように配置される。即ち、図８Ｂの第２の接続部１１３は、主にアンテナパターン（コイルLc）の辺６１－３ｃ、辺６１－３ｄ、および辺６１－３ｅに相当する。

【０１２２】このように、アンテナシート６１とTAGアンテナ１２とは、実装される場所や大きさ、または製造における工程などが考慮された様々な形での配置が可能であり、非常に近接して配置されることができることから、アンテナシート６１とTAG装置１２とは必要に応じて同一の装置として運用されることができる。

【０１２３】換言すると、アンテナシート６１とTAGアンテナ２３とは一体のアンテナとしてみなすことができる。即ち、アンテナシート６１が使用されれば、TAGアンテナ２３が変更されなくても、容易に通信範囲の拡大が達成されることができる。

【０１２４】ただし、上述したように、アンテナシート６１とTAGアンテナ２３との大きさの差は甚だ異なる必要がある。なぜならば、仮にアンテナシート６１とTAGアンテナ２３との大きさがほぼ等しい場合、幾何学的結合係数ｋが低い臨界結合係数k0にマッチングされるためには、アンテナシート６１とTAGアンテナ２３とが離されて配置される必要があり、これでは実用上、容易に通信範囲の拡大が達成されたとは言いがたいからである。

【０１２５】また、特に、図９Ａに示されるような配置方法、即ち、アンテナシート６１－１の法線方向とTAG装置１２のTAGアンテナ２３の法線方向とが垂直となるように配置させるという配置方法は、２つのアンテナを対向させて通信するという従来の通信システムでは適用不可能であり、上述したアンテナ導線周囲のループ磁界が利用される方式が採用されて初めて可能になったものである。この配置方法は、以下の応用例においてもその効果を十分に発揮している。

【０１２６】即ち、図１０は、図８の非接触通信システム１１１が適用されたビデオカセットシステムの構成例を表している。

【０１２７】現在、図１０Ａに示されるような小型のTAG装置１２が埋め込まれたビデオカセット１２１と、R/Wアンテナ２２が取り付けられたビデオカセットプレーヤ１２２とから構成されるビデオカセットシステムが商品化されている。

【０１２８】このシステムにおいては、ビデオカセット１２１がビデオカセットプレーヤ１２２内に装着された場合、ビデオカセット１２１に埋め込まれたTAG装置１２（TAGアンテナ２３）と、ビデオデッキに取り付けられたR/Wアンテナ２２とが近距離において対向して、ビデオカセットプレーヤ１２２内で非接触通信が行われる。

【０１２９】このTAGアンテナ２３は、ビデオデッキカセット１２１の形状に合わせて超小型に製作されており、主に近接距離（ビデオデカセットプレーヤ１２２内）での通信が目的とされたアンテナである。

【０１３０】このようなビデオカセット１２１に関しても、ビデオカセット１２１本体のTAG装置１２が変更されることなく、図１０Ｂに示されるように、アンテナシート６１が追加されるだけで、容易にその通信距離が変更されることができる。

【０１３１】即ち、図１０Ｂに示されるように、シート状に形成されたアンテナシート６１が、ビデオカセット１２１と一緒にビデオカセットケース１２２に収められると、アンテナシート６１とTAGアンテナ２３とが最適な位置関係で配置されたことになり、その結果、TAGアンテナ２３の通信距離が、見かけ上、延長される。

【０１３２】換言すると、TAGアンテナ２３の大きさは、見かけ上、アンテナシート６１の大きさに拡張されたことになり、それに応じたR/W装置（ビデオカセットプレーヤ１２２に搭載されているR/W装置１１とは別のR/W装置）が使用されることで、遠距離での通信が可能となる。

【０１３３】このようにして、本来、近距離通信が目的とされた非接触通信基礎システム１において、アンテナシート６１が追加されるだけで、TAG装置１２本体が変更されることなく通信距離が延長されることができる。例えば、ユーザは、ビデオカセットケース１２２をアンテナシート６１とともにビデオカセット１２１に挿入し、それをその他のR/W装置にかざすだけで、非接触通信を行わせることができる。

【０１３４】さらに、アンテナシート６１が例えば図９Ａのような形状の場合、アンテナシート６１は、上述したように（図１０Ｂに示されるように）、１枚のシート状に形成される他、例えば、図９Ｂのような形状の場合、カセットインデックスシート状（L字型）に形成されることができる。

【０１３５】このように、対応するR/Wアンテナ２２にあわせてアンテナシート６１の大きさが変更されることによって、通信距離の決定要因がR/Wアンテナ２２とTAGアンテナ２３の組み合わせではなく、R/Wアンテナ２２とアンテナシート６１の組み合わせになる。これはちょうどR/Wアンテナ２２からは、TAG装置１２のアンテナがアンテナシート６１になったようにみなされることを意味している。

【０１３６】即ち、アンテナシート６１は、小さなTAGアンテナ２３の近傍に適切に設置されることにより、TAGアンテナ２３が変更されたときと同じ効果を奏することができる。従って、製造者等は、TAGアンテナ２３の大きさによらず、新たなR/Wアンテナを設計し、TAG装置１２の通信距離を延長することができる。

【０１３７】さらに、アンテナシート６１はTAGアンテナ２３に接して使用されるために、両者は一体に扱われることができ、実際の利用において非常に利便性の高いものとなる。

【０１３８】さらにまた、アンテナシート６１は、アンテナパターン（コイルLc）と、共振を調整するための少ない容量のキャパシタCcとの２つ素子のみといった非常に簡素な構成で実現可能であり、非常に少ないコストで製造が可能であるとともに、配置上の自由度が比較的高いアンテナ装置である。

【０１３９】従って、アンテナシート６１が適用された非接触通信システム１１１は、スペース上の理由からやむを得ずTAGアンテナ２３が小さく設計されたが、用途に応じてTAG装置１２の通信距離の延長が要求される場合等において、特に有効なシステムである。

【０１４０】また、非接触通信システム１１１は、１つのTAGアンテナ２３に対して、R/Wアンテナ２２以外の複数のR/Wアンテナを対応させることができる。即ち、製造者等は、配置スペースや用途に見合った通信距離に応じて複数のR/Wアンテナを設計することができ、その結果、上述したようなビデオカセットシステムの他、様々な非接触通信技術が利用されるシステムまたは装置等を製造することができる。

【０１４１】このように、非接触通信システム１１１は、アンテナの導線周囲のループ磁界を利用することを特徴としており、従来のアンテナパターン平面（コイルのループ平面）の法線方向に発生する磁界を利用する非接触通信システムとは明らかに異なるシステムである。

【０１４２】ところで、このアンテナの導線周囲のループ磁界を利用するという手法は、アンテナシート６１が使用されない場合であって、二つのアンテナの大きさが非常に異なるようなときにおいて、同様に適用されることができる。

【０１４３】即ち、図１の非接触通信基礎システム１において、例えば、R/Wアンテナ２２がTAGアンテナ２３に比較して甚だ大きい場合、図１１に示されるように、TAGアンテナ２３が、その法線方向とR/Wアンテナ２２の法線方向とが一致されるように、アンテナシート６１の中心位置１３１付近に配置されたとき、R/W装置１１は、TAG装置１２から情報を読み取ることが困難となる。

【０１４４】一方、R/Wアンテナ２２の導線の周りに発生されるループ磁界を受けるような淵、即ち、エッジ位置１３２付近に、TAGアンテナ２３が配置されたとき、R/W装置１１は、TAG装置１２から情報を読み取ることが可能となる。

【０１４５】このように、上述した手法（アンテナの導線周囲のループ磁界を利用する手法）は、R/Wアンテナの淵にTAGアンテナを配置して通信する様な非接触通信システムに適用されることができる。

【０１４６】なお、図１１においては、R/Wアンテナ２２がTAGアンテナ２３に比較して甚だ大きい場合につい

て図示されているが、R/Wアンテナ２２がTAGアンテナ２３に比較して甚だ小さい場合についても、上述した手法（アンテナの導線周囲のループ磁界を利用する手法）は適用されることができる。

【０１４７】また、本明細書において、システムとは、処理手段、および複数の装置により構成される装置全体を表すものである。

【０１４８】

【発明の効果】以上のごとく、本発明の非接触通信システム、並びに非接触通信補助装置および方法によれば、通信距離を延長することができる。

【図面の簡単な説明】

【図１】本発明が適用される非接触通信基礎システムの構成例を示す図である。

【図２】図１の非接触通信基礎システムのR/WアンテナとTAGアンテナの、それぞれの間の距離、径、および幾何学的結合係数の関係例を示す図である。

【図３】本発明が適用されるアンテナシートの構成例を示す図である。

【図４】図３のアンテナシートの配置の構成例を示す図である。

【図５】図３のアンテナシートと図１の非接触通信基礎システムのTAGアンテナとの配置位置、および幾何学的結合係数の関係例を示す図である。

【図６】図３のアンテナシートの原理、および図３のアンテナシートと図１の非接触通信基礎システムのTAGアンテナの配置位置の関係例を説明する図である。

【図７】図３のアンテナシートと図１の非接触通信基礎システムのTAGアンテナとの幾何学的結合係数のマッチング、および、図３のアンテナシートと図１の非接触通信基礎システムのR/Wアンテナとの幾何学的結合係数のマッチングの例を模式的に示す図である。

【図８】図３のアンテナシートが図１の非接触通信基礎システムに搭載された本発明が適用される非接触通信システムの構成例を示す図である。

【図９】図８の非接触通信システムのアンテナシートとTAGアンテナの実装例の構成を示す図である。

【図１０】図８の非接触通信システムが適用されたビデオカセットシステムの構成例を示す図である。

【図１１】図１の非接触通信基礎システムのTAGアンテナとR/Wアンテナの配置の応用例の構成を示す図である。

【符号の説明】

１　非接触通信基礎システム，　１１　R/W装置，　１２　TAG装置，　２１R/W主装置，　２２　R/Wアンテナ，　２３　TAGアンテナ，　２４ＬＳ変調回路，　２５　TAG主装置，　６１　アンテナシート，　７１　基板，１１１　非接触通信装置，　１１２　第１の結合部，　１１３　第２の結合部，　Ra，Rb，Rc　抵抗，La，Lb　コイル，　Lc　アンテナコイル，　Ca,Cb,Ccキャパシタ，　Ha，Hr，Ht　磁界，　ir，it　誘導電流

【図１】

図1

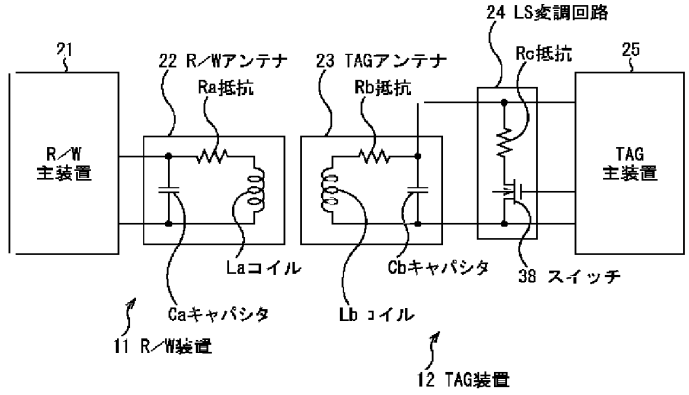

非接触通信基礎システム 1

【図2】

図2

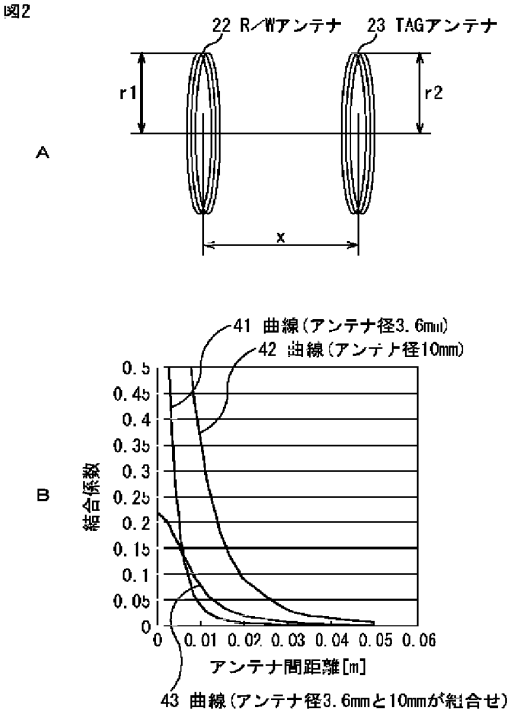

【図3】

図3

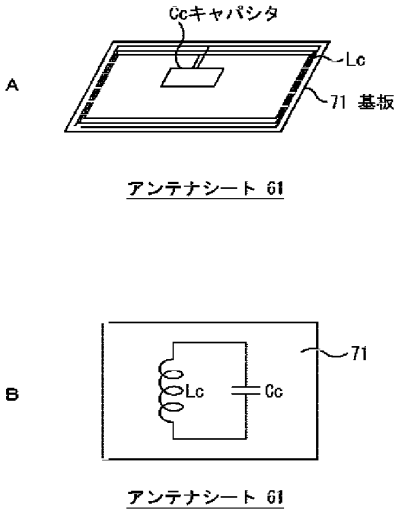

【図4】

図4

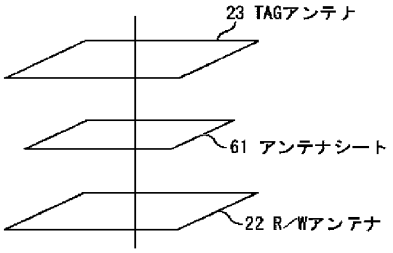

【図5】

図5

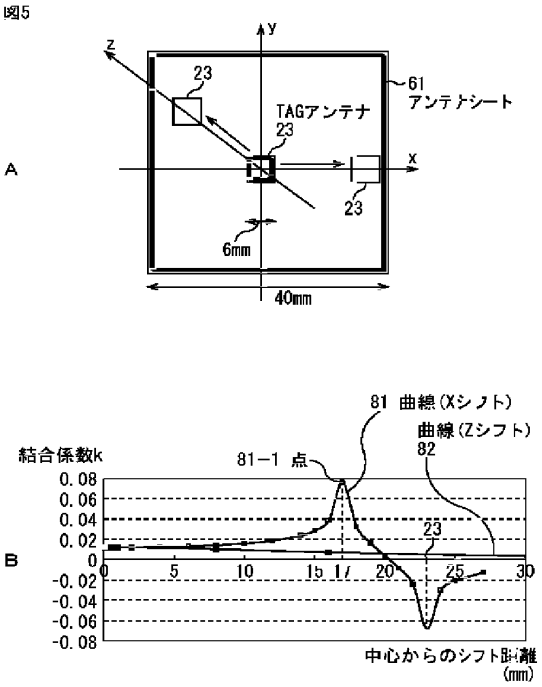

【図6】

図6

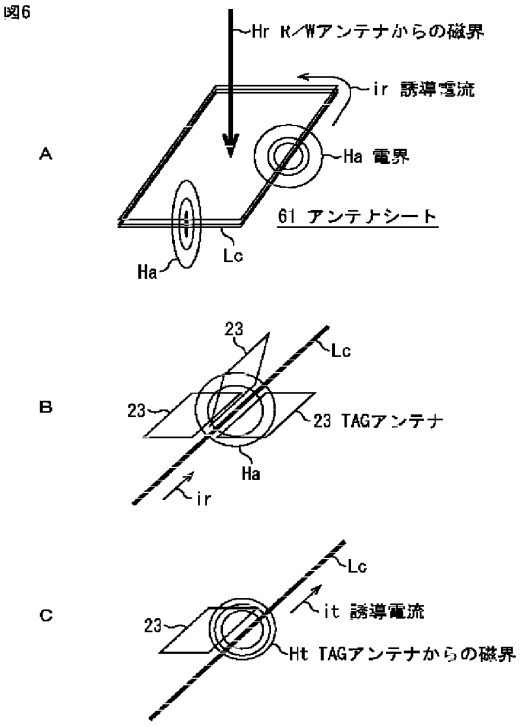

【図7】

図7

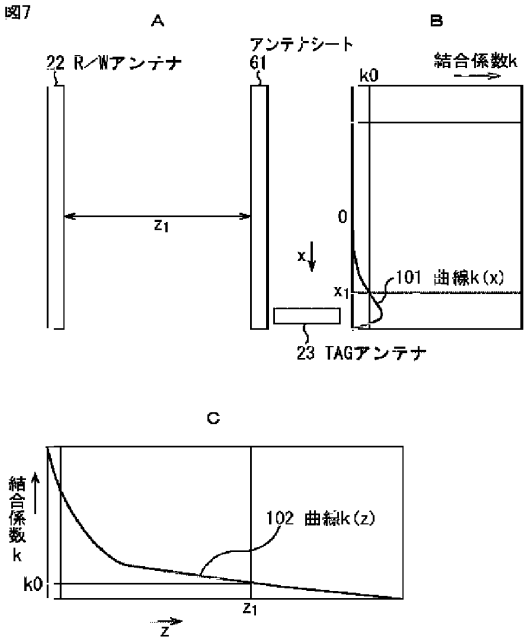

【図8】

図8

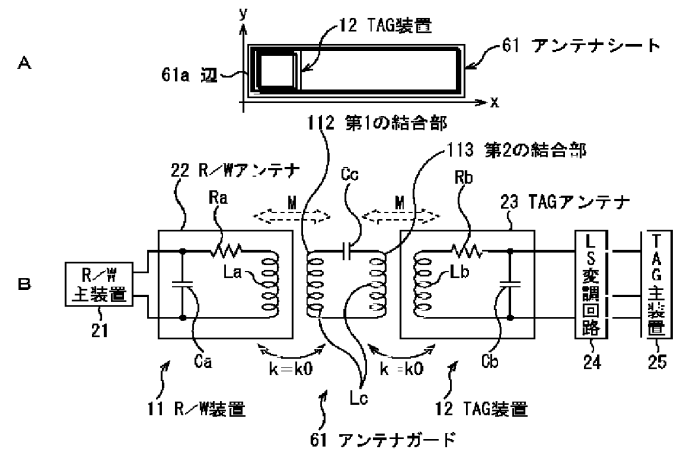

非接触通信システム 111

【図9】

図9

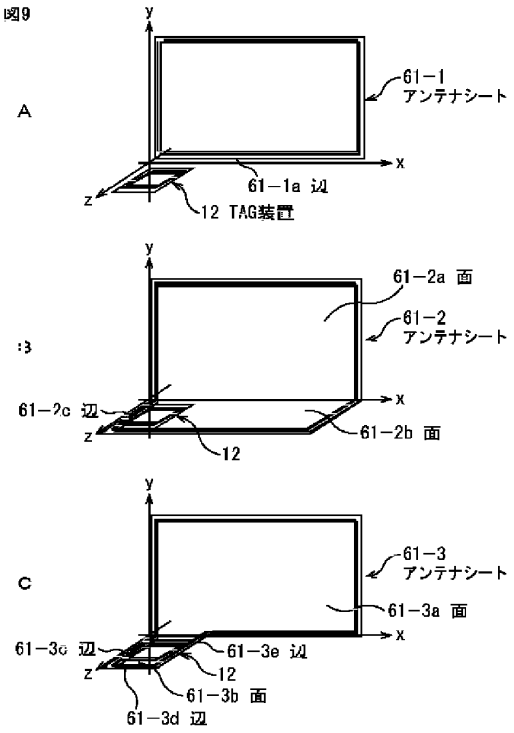

【図10】

図10

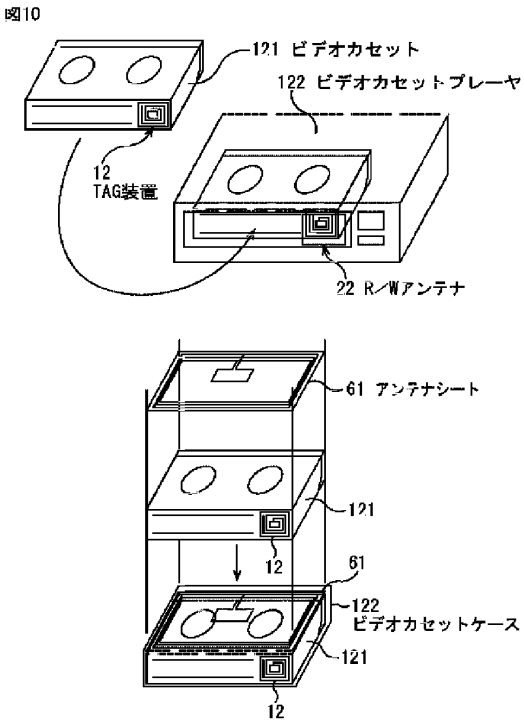

【図11】

図11

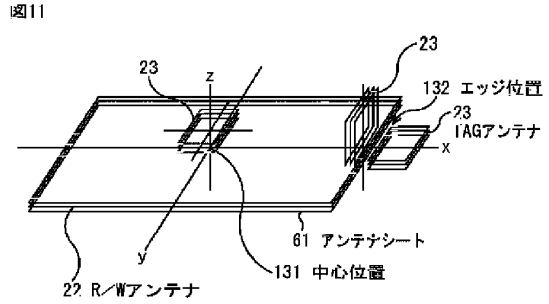

フロントページの続き

(72)発明者　細見　宙史
東京都品川区北品川６丁目７番35号　ソニー株式会社内

Ｆターム(参考)　5B058 CA15 KA24
5K012 AA03 AB03 AC06 AC08 AC10
BA02

Patent Record Full View Thursday, May 2 2013 THOMSON INNOVATION

Patent/Publication: JP2003179526A

Bibliography

DWPI Title

Non-contact communication system for integrated circuit card system, has read/write apparatus and tag apparatus which perform non-contact communication by inductive coupling of respective antenna with antenna sheet

Original Title

NON-CONTACT COMMUNICATION SYSTEM, AND AUXILIARY DEVICE AND METHOD FOR NON-CONTACT COMMUNICATION

A non-contact communication system, a non-contact communication auxiliary|assistance apparatus, and a method *(Translation from Thomson Reuters)*

English Title

NON-CONTACT COMMUNICATION SYSTEM, AND AUXILIARY DEVICE AND METHOD FOR NON-CONTACT COMMUNICATION

Assignee/Applicant

Standardized: **SONY CORP**

Original: SONY CORP

DWPI Assignee/Applicant

SONY CORP (SONY-C)

Inventor

KOBAYASHI MIYUKI, KANEKO MASAYASU, HOSOMI HIROSHI,

DWPI Inventor

HOSOMI H; KANEKO M; KOBAYASHI M

Publication Date (Kind Code)

2003-06-27 (A)

DWPI Accession / Update

2003-667167 / 200363

Application Number / Date

JP2001377599A / 2001-12-11

Priority Number / Date / Country

JP2001377599A / 2001-12-11 / JP

InductEV, Inc.
Exhibit 1031
Page 252

Abstract

DWPI Abstract

(JP2003179526A_)

Novelty

A read/write (R/W) antenna (22) and a tag antenna carry out inductive coupling with respective coupling portion (112, 113) of an antenna sheet (61) due to circulation magnetic field. A R/W apparatus (11) and a tag apparatus (12) perform non-contact communication by the inductive coupling of the respective antennas with the antenna sheet.

Detailed Description

INDEPENDENT CLAIMS are also included for the following:

1. non-contact communication auxiliary equipment; and
2. non-contact communication assisting method.

Use

For integrated circuit card system.

Advantage

Enables to extend communication distance by mounting an antenna sheet between the apparatus.

Drawing Description

The figure shows the structure of the non-contact communication system. (Drawing includes non- English language text).

11 - R/W apparatus.

12 - tag apparatus.

22 - R/W antenna.

23 - tag antenna.

112, 113 - coupling portions of antenna sheet.

Abstract

PROBLEM TO BE SOLVED: To extend a communication range.

SOLUTION: A non-contact communication system comprises an R/W device 11 provided with an R/W antenna 22 resonating with a communication carrier frequency, a TAG device 12 provided with a TAG antenna 23 resonating with the communication carrier frequency, and an antenna sheet 61 operating as an antenna resonating with the communication carrier frequency. The R/W antenna 22 is electromagnetically coupled with a first coupling part 112 of the antenna sheet 61, and a second coupling part 113 is

InductEV, Inc.
Exhibit 1031
Page 253

electromagnetically coupled with the TAG antenna 23 by a circulating magnetic field around a lead of the second coupling part 113 or the TAG antenna 23 produced by a line current flowing through the lead. The R/W device 11 and the TAG device 12 carry out non-contact communication with each other via the electromagnetically coupled R/W antenna 22, the antenna sheet 61, and the TAG antenna 23.
COPYRIGHT: (C)2003, JPO&Japio

SUBJECT of the Invention It enables it to extend communication distance.
PROBLEM to be solved The non-contact communication system 111 consists of the R/W apparatus 11 equipped with the R/W antenna 22 which resonates to a communication carrier frequency, the TAG apparatus 12 equipped with the TAG antenna 23 which resonates to a communication carrier frequency, and the antenna sheet|seat 61 operate|moved as an antenna which resonates to a communication carrier frequency,
And
While the R/W antenna 22 and the 1st coupling|bond part 112 of the antenna sheet|seat 61 carry out an inductive coupling, the 2nd coupling|bond part 113 and the TAG antenna 23 carry out an inductive coupling by the circulation magnetic field which the line current which flows into the conducting wire of the 2nd coupling|bond part 113 or the TAG antenna 23 produced|generated around conducting wire,
Non-contact communication of the R/W apparatus 11 and the TAG apparatus 12 is mutually carried out through the R/W antenna 22 by which the inductive coupling was carried out, the antenna sheet|seat 61, and the TAG antenna 23.
[MAT_IMAGE 000002]
(Translation from Thomson Reuters)

Classes/Indexing

IPC

IPC Code(1-7) **H04B 5/02** G06K 17/00 H01Q 7/00
(7)

Current IPC	Invention	Version	Additional	Version
Full	G06K 17/00 H01Q 7/00 H04B 5/02	20060101 20060101 20060101	-	-
Main Group	-	-	-	-
Subclass	-	-	-	-

Original IPC	Invention	Version	Additional	Version
Advanced/Full	G06K 17/00 H01Q 7/00 H04B 5/02	20060101 20060101 20060101	-	-
Core/Main Group	G06K 17/00 H01Q 7/00 H04B 5/02	20060101 20060101 20060101	-	-
Subclass	-	-	-	-

JP FI Codes

G06K 17/00 F; H01Q 7/00 ; H04B 5/02

JP F Terms

5B058: CA15; KA24

5J048

5K012: AA03; AB03; AC06; AC08; AC10; BA02

DWPI Class

T04 W02

DWPI Manual Codes

Expand DWPI Manual Codes

Legal Status

INPADOC Legal Status

Gazette Date	Code	Description
2010-03-25	FPAY +	RENEWAL FEE PAYMENT PAYMENT UNTIL: 20130319
2010-03-18	A61 +	FIRST PAYMENT OF ANNUAL FEES (DURING GRANT PROCEDURE) JAPANESE INTERMEDIATE CODE: A61 2010-03-15
2010-03-11	A01 +	WRITTEN DECISION TO GRANT A PATENT OR TO GRANT A REGISTRATION (UTILITY MODEL) JAPANESE INTERMEDIATE CODE: A01
2010-02-02	A521	WRITTEN AMENDMENT JAPANESE INTERMEDIATE CODE: A523 2010-02-01

Get Family Legal Status

Family

Family

INPADOC Family (2)

	Publication Number	Publication Date	Inventor	Assignee/Applicant	Title
	JP2003179526A	2003-06-27	KOBAYASHI MIYUKI	SONY CORP	NON-CONTACT COMMUNICATION SYSTEM
	JP04478366B2	2010-06-09	-	SONY CORP	-

DWPI Family (2); Countries (1)

Publication	DWPI Update	Publication Date	IPC Code	Language
JP2003179526A	200363	2003-06-27	H04B000502	Japanese

InductEV, Inc.
Exhibit 1031
Page 255

Local Applications: JP2001377599A filed 2001-12-11				
JP04478366B2	201038	2010-06-09	H04B000502	Japanese
Local Applications: JP2001377599A filed 2001-12-11				

Claims

Claims

All Claims (20)

Claims (English)

1. A 1st non-contact communication apparatus equipped with the 1st antenna which resonates to a communication carrier frequency,
A 2nd non-contact communication apparatus equipped with the 2nd antenna which resonates to said communication carrier frequency,
It consists of a non-contact communication auxiliary|assistance apparatus equipped with the 3rd antenna which resonates to said communication carrier frequency,
And
While said 1st and said 3rd antenna carries out an inductive coupling, said 2nd and said 3rd antenna carries out an inductive coupling by said 2nd or the circulation magnetic field which the line current which flows into the conducting wire of said 3rd antenna produced|generated around said conducting wire,
Non-contact communication of said 1st and said 2nd non-contact communication apparatus is mutually carried out through said 1st and said 3rd antenna which carried out the inductive coupling, and said 3rd and said 2nd antenna.
The non-contact communication system characterized by the above-mentioned.

2. A said 1st thru|or 3rd antenna is a loop antenna,
The loop area of said 2nd antenna is smaller than the loop area of said 1st and said 3rd antenna.
The non-contact communication system of Claim 1 characterized by the above-mentioned.

3. Said 2nd antenna is adjoined and arranged at said conducting wire of said 3rd antenna.
The non-contact communication system of Claim 2 characterized by the above-mentioned.

4. Said 2nd antenna is arranged on said loop surface of said 3rd antenna.
The non-contact communication system of Claim 3 characterized by the above-mentioned.

5. Said 2nd antenna is arranged so that the normal-line direction of said 2nd antenna and the normal-line direction of said 3rd antenna may become perpendicular|vertical.
The non-contact communication system of Claim 3 characterized by the above-mentioned.

6. When said 1st and said 3rd antenna carries out an inductive coupling, while adjusting the 1st value of the geometric coupling coefficient in in a 1st distance between said 1st and said 3rd antennas,
When said 2nd and said 3rd antenna carries out an inductive coupling, the 2nd value of the geometric coupling coefficient in is adjusted in a 2nd distance between the loop area ratio of said 2nd and said 3rd antenna, and said 2nd and said 3rd antenna shorter than said 1st distance,
The said 1st and said 2nd value of said geometric coupling coefficient is matched with predetermined value.
The non-contact communication system of Claim 1 characterized by the above-mentioned.

7. Said 1st non-contact communication apparatus,
A production|generation means to produce|generate the conveyance signal of said communication carrier frequency,
A conveyance signal transmitting means to superimpose 1st information on said conveyance signal

InductEV, Inc.
Exhibit 1031
Page 256

produced|generated by said production|generation means, and to transmit to it
These are further provided.
The non-contact communication system of Claim 1 characterized by the above-mentioned.

8. Said 2nd non-contact communication apparatus,
A receiving means to receive said conveyance signal transmitted by said conveyance signal transmitting means of said 1st non-contact communication apparatus through said 1st thru|or said 3rd antenna,
An electric power acquisition means to acquire electric power from said conveyance signal received by said receiving means,
A 1st information acquisition means to acquire said 1st information currently superimposed on said conveyance signal received by said receiving means,
An information output means to output 2nd information,
A modulation|irregularity means to change the receiving end impedance of said 2nd antenna based on said 2nd information output by said information output means
These are further provided.
The non-contact communication system of Claim 7 characterized by the above-mentioned.

9. Said 1st non-contact communication apparatus,
A detection means to detect the variation of said receiving end impedance of said 2nd antenna which changed with said modulation|irregularity means of said 2nd non-contact communication apparatus through said 1st thru|or said 3rd antenna,
A 2nd information acquisition means to acquire said 2nd information output by said information output means of said 2nd non-contact communication apparatus based on the variation of said receiving end impedance of said 2nd antenna detected by said detection means
These are further provided.
The non-contact communication system of Claim 8 characterized by the above-mentioned.

10. A 1st non-contact communication apparatus equipped with the 1st antenna which resonates to a communication carrier frequency,
It consists of a 2nd non-contact communication apparatus equipped with the 2nd antenna which resonates to said communication carrier frequency,
And
By said 1st or the circulation magnetic field which the line current which flows into the conducting wire of said 2nd antenna produced|generated around said conducting wire, said 1st antenna and said 2nd antenna carry out an inductive coupling,
Non-contact communication of said 1st and said 2nd non-contact communication apparatus is mutually carried out through said 1st and said 2nd antenna which carried out the inductive coupling.
The non-contact communication system characterized by the above-mentioned.

11. A said 1st and said 2nd antenna,
It is the loop antenna which has a mutually different loop area.
The non-contact communication system of Claim 10 characterized by the above-mentioned.

12. A said 1st and said 2nd antenna is each arranged so that the normal-line direction of said 1st antenna and the normal-line direction of said 2nd antenna may become perpendicular|vertical.
The non-contact communication system of Claim 11 characterized by the above-mentioned.

13. The relay antenna which resonates to a communication carrier frequency is provided,
A said relay antenna,
While an inductive coupling is carried out to the another 1st antenna which resonates to said communication carrier frequency, the inductive coupling of the line current which flows into the conducting wire of the another 2nd antenna which resonates to the conducting wire or said communication carrier frequency of said relay antenna is carried out to said 2nd antenna by the circulation magnetic field produced|generated around said conducting wire,
It is non-contact and the information and electric power which communicate between said 1st and said 2nd antennas are relayed.
The non-contact communication auxiliary|assistance apparatus characterized by the above-mentioned.

InductEV, Inc.
Exhibit 1031
Page 257

14. A said relay antenna has the capacitor which comprises the resonance circuit which resonates to said communication carrier frequency, and an inductance,
A said antenna coil,
The 1st coupling|bond part which carries out an inductive coupling to said 1st antenna,
It has the 2nd coupling|bond part which carries out electromagnetic joining with said 2nd antenna.
The non-contact communication auxiliary|assistance apparatus of Claim 13 characterized by the above-mentioned.

15. A sheet-like base material is further provided,
A said antenna coil and said capacitor are formed by a pattern on the surface of said base material.
The non-contact communication auxiliary|assistance apparatus of Claim 16 characterized by the above-mentioned.

16. A said 1st and said 2nd coupling|bond part is comprised as said pattern of the same said antenna coil.
The non-contact communication auxiliary|assistance apparatus of Claim 15 characterized by the above-mentioned.

17. The surface of said base material is a 1st surface,
It is comprised from the 2nd surface which is not parallel to said 1st surface,
It circulates through said pattern of said antenna coil over said 1st and said 2nd surface top.
The non-contact communication auxiliary|assistance apparatus of Claim 15 characterized by the above-mentioned.

18. It is perpendicular|vertical in the normal-line direction of said 1st surface, and the normal-line direction of said 2nd surface.
The non-contact communication auxiliary|assistance apparatus of Claim 17 characterized by the above-mentioned.

19. Said 2nd antenna is adjoined and arranged at said pattern of said 1st or said antenna coil which was arranged while arranging on said 2nd surface and which is formed on said 1st or said 2nd surface.
The non-contact communication auxiliary|assistance apparatus of Claim 18 characterized by the above-mentioned.

20. In the non-contact communication auxiliary|assistant method of a non-contact communication auxiliary|assistance apparatus equipped with the relay antenna which resonates to a communication carrier frequency,
A said relay antenna,
While carrying out the inductive coupling of the another 1st antenna which resonates to said communication carrier frequency,
By the circulation magnetic field which the line current which flows into the conducting wire of the another 2nd antenna which resonates to the conducting wire or said communication carrier frequency of said relay antenna produced|generated around said conducting wire, the inductive coupling of said relay antenna and said 2nd antenna is carried out,
With said relay antenna by which the inductive coupling was each carried out to said 1st and said 2nd antenna, it is non-contact and the information and electric power which communicate between said 1st and said 2nd antennas are relayed.
The non-contact communication auxiliary|assistant method characterized by the above-mentioned.

(Translation from Thomson Reuters)

Description

DWPI Drawing Description

InductEV, Inc.
Exhibit 1031
Page 258

The figure shows the structure of the non-contact communication system. (Drawing includes non- English language text).

11 - R/W apparatus.

12 - tag apparatus.

22 - R/W antenna.

23 - tag antenna.

112, 113 - coupling portions of antenna sheet.

Drawing Description

Drawing Description

-

Description

Description

TECHNICAL FIELD of the Invention

This invention is related to a non-contact communication system, a non-contact communication auxiliary|assistance apparatus, and a method.
Specifically,
It relates to the non-contact communication system which enabled it to extend communication distance, a non-contact communication auxiliary|assistance apparatus, and a method.

PRIOR ART

IC(Integrated Circuit) card system by which the non-contact communication technique was applied is comprised what is called from a reader-writer apparatus (It describes as a R/W apparatus hereafter) which it is non-contact to the IC card, and can store predetermined information in it while it is non-contact and reads a portable IC card and the information currently stored in the IC card.

That is, it is the convenient high system [IC card system is non-contact and] which can read/write information,
It uses as the alternative system of the conventional magnetic-type card system represented by a season ticket and the authentication card in recent years, or a physical distribution system etc.

Moreover, an IC memory is made to store predetermined information in the memory|storage device (For example, videocassette tape) of the tape type|system|group which cannot do a random access in in ディックス.
The non-contact communication system which enabled it to grasp|ascertain the predetermined information without the access to a storage medium non-contactly and easily is used.

It is indispensable practically to instantaneously operate|move such a non-contact communication system only by holding up the transponder units (It describes as a TAG apparatus hereafter), such as an IC card, in the magnetic field which a R/W apparatus generate|occur|produces.

Therefore, in utilization of a non-contact communication system, the distance in which the instantaneous operation|movement is possible (distance between a R/W apparatus and a TAG apparatus), i.e., a practical communication distance, needs to be ensured.

On the other hand, the application range spreads greatly from the usefulness of a non-contact

InductEV, Inc.
Exhibit 1031
Page 259

communication technique, and various TAG apparatus are devised.
For example, compared with the TAG apparatus of usual card|curd size, the small-sized TAG apparatus is devised very much.

PROBLEM to be solved by the Invention

However
In the non-contact communication system with which this micro TAG apparatus is used, communication distance was limited very much to short distance, and the task that ensuring of a practical communication distance was difficult occurred.

This invention was comprised in view of such a situation,
It enables it to extend communication distance.

MEANS to solve the Problem

The non-contact communication system of this invention 1 consists of a 1st non-contact communication apparatus equipped with the 1st antenna which resonates to a communication carrier frequency, a 2nd non-contact communication apparatus equipped with the 2nd antenna which resonates to a communication carrier frequency, and a non-contact communication auxiliary|assistance apparatus equipped with the 3rd antenna which resonates to a communication carrier frequency,
And
While a 1st and 3rd antenna carries out an inductive coupling, a 2nd and 3rd antenna carries out an inductive coupling by the circulation magnetic field which the line current which flows into the conducting wire of a 2nd or 3rd antenna produced|generated around conducting wire,
Non-contact communication of the 1st and 2nd non-contact communication apparatus is mutually carried out through the 1st and 3rd antenna which carried out the inductive coupling, and a 3rd and 2nd antenna,
It is characterized by the above-mentioned.

A 1st thru|or 3rd antenna is a loop antenna,
A 2nd loop area of an antenna can be smaller than the loop area of a 1st and 3rd antenna.

A 2nd antenna adjoins to the conducting wire of a 3rd antenna, and can be arranged.

A 2nd antenna can be arranged on the loop surface of a 3rd antenna.

A 2nd antenna can be arranged so that the normal-line direction of a 2nd antenna and the normal-line direction of a 3rd antenna may become perpendicular|vertical.

When a 1st and 3rd antenna carries out an inductive coupling, while adjusting the 1st value of the geometric coupling coefficient in in a 1st distance between 1st and 3rd antennas, when a 2nd and 3rd antenna carries out an inductive coupling, the 2nd value of the geometric coupling coefficient in is adjusted in a 2nd distance between 2nd and 3rd antennas shorter than the loop area ratio of a 2nd and 3rd antenna, and a 1st distance,
The 1st and 2nd value of a geometric coupling coefficient can be matched with predetermined value.

A 1st non-contact communication apparatus is a production|generation means to produce|generate the conveyance signal of a communication carrier frequency,
A conveyance signal transmitting means to superimpose 1st information on the conveyance signal produced|generated by the production|generation means, and to transmit to it
These can further be provided.

A 2nd non-contact communication apparatus is a receiving means to receive the conveyance signal transmitted by the conveyance signal transmitting means of a 1st non-contact communication apparatus through a 1st thru|or 3rd antenna,

InductEV, Inc.
Exhibit 1031
Page 260

An electric power acquisition means to acquire electric power from the conveyance signal received by the receiving means,
A 1st information acquisition means to acquire the 1st information currently superimposed on the conveyance signal received by the receiving means,
An information output means to output 2nd information,
A modulation|irregularity means to change the receiving end impedance of a 2nd antenna based on the 2nd information output by the information output means
These can further be provided.

A 1st non-contact communication apparatus is a detection means to detect the variation of the receiving end impedance of the 2nd antenna which changed with the modulation|irregularity means of a 2nd non-contact communication apparatus through a 1st thru|or 3rd antenna,
A 2nd information acquisition means to acquire the 2nd information output by the output means of a 2nd non-contact communication apparatus based on the variation of the receiving end impedance of the 2nd antenna detected by the detection means
These can further be provided.

In the non-contact communication system of this invention 1
While the inductive coupling of the 1st antenna of the 1st non-contact communication apparatus which resonates to a communication carrier frequency, and the 3rd antenna of the non-contact communication auxiliary|assistance apparatus which resonates to a communication carrier frequency is carried out
By the circulation magnetic field which the line current which flows into the conducting wire of the 2nd antenna of the 2nd non-contact communication apparatus which resonates to a communication carrier frequency, or a 3rd antenna produced|generated around conducting wire
The inductive coupling of the 2nd and 3rd antenna is carried out, and non-contact communication is mutually carried out between 1st and 2nd non-contact communication apparatus through the 1st and 3rd antenna by which the inductive coupling was carried out, and a 3rd and 2nd antenna.

The non-contact communication system of this invention 2 consists of a 1st non-contact communication apparatus equipped with the 1st antenna which resonates to a communication carrier frequency, and a 2nd non-contact communication apparatus equipped with the 2nd antenna which resonates to a communication carrier frequency,
And
By the circulation magnetic field which the line current which flows into the conducting wire of a 1st or 2nd antenna produced|generated around conducting wire, a 1st antenna and a 2nd antenna carry out an inductive coupling,
Non-contact communication of the 1st and 2nd non-contact communication apparatus is mutually carried out through the 1st and 2nd antenna which carried out the inductive coupling,
It is characterized by the above-mentioned.

A 1st and 2nd antenna can be a loop antenna which has a mutually different loop area.

A 1st and 2nd antenna can each be arranged so that the normal-line direction of a 1st antenna and the normal-line direction of a 2nd antenna may become perpendicular|vertical.

In the non-contact communication system of this invention 2, the inductive coupling of the 1st and 2nd antenna is carried out by the circulation magnetic field which the line current which flows into the conducting wire of the 1st antenna of the 1st non-contact communication apparatus which resonates to a communication carrier frequency, or the 2nd antenna of the 2nd non-contact communication apparatus which resonates to a communication carrier frequency produced|generated around conducting wire, and non-contact communication is mutually carried out between 1st and 2nd non-contact communication apparatus through the 1st and 2nd antenna by which the inductive coupling was carried out.

The non-contact communication auxiliary|assistance apparatus of this invention is equipped with the relay antenna which resonates to a communication carrier frequency, an inductive coupling is carried out to a 2nd antenna by the circulation magnetic field which the line current which flows into the conducting wire of the another 2nd antenna which resonates to the conducting wire or the communication carrier

InductEV, Inc.
Exhibit 1031
Page 261

frequency of a relay antenna while the inductive coupling of the relay antenna is carried out to the another 1st antenna which resonates to a communication carrier frequency produced|generated around conducting wire, it is non-contact and the information and the electric power which communicate between 1st and 2nd antennas act as intermediary,
It is characterized by the above-mentioned.

A relay antenna has the capacitor which comprises the resonance circuit which resonates to a communication carrier frequency, and the antenna coil which acts as an inductance,
An antenna coil can have the 1st coupling|bond part which carries out an inductive coupling to a 1st antenna, and the 2nd coupling|bond part which carries out electromagnetic joining with a 2nd antenna.

A sheet-like base material is further provided and an antenna coil and a capacitor can be formed by a pattern on the surface of a base material.

A 1st and 2nd coupling|bond part can be comprised as a pattern of the same antenna coil.

The surface of a base material is comprised from the 1st surface and the 2nd surface which is not parallel to a 1st surface,
It can circulate through the pattern of an antenna coil over a 1st and 2nd surface top.

The normal-line direction of a 1st surface and the normal-line direction of a 2nd surface can be perpendicular|verticals.

A 2nd antenna adjoins to the pattern of the antenna coil formed on the arranged 1st or 2nd surface, and can be arranged while arranging on a 1st or 2nd surface.

While the non-contact communication auxiliary|assistant method of this invention carries out the inductive coupling of the relay antenna which resonates to a communication carrier frequency, and the another 1st antenna which resonates to a communication carrier frequency, the inductive coupling of a relay antenna and the 2nd antenna is carried out by the circulation magnetic field which the line current which flows into the conducting wire of the another 2nd antenna which resonates to the conducting wire or the communication carrier frequency of a relay antenna produced|generated around conducting wire,
With the relay antenna by which the inductive coupling was each carried out to the 1st and 2nd antenna, it is non-contact and the information and electric power which communicate between 1st and 2nd antennas are relayed,
It is characterized by the above-mentioned.

In the non-contact communication auxiliary|assistance apparatus and method of this invention
While the inductive coupling of the relay antenna which resonates to a communication carrier frequency, and the another 1st antenna which resonates to a communication carrier frequency is carried out
By the circulation magnetic field which the line current which flows into the conducting wire of the another 2nd antenna which resonates to the conducting wire or the communication carrier frequency of a relay antenna produced|generated around conducting wire
By the relay antenna by which the inductive coupling of a relay antenna and the 2nd antenna was carried out, and the inductive coupling was each carried out to the 1st and 2nd antenna, the information and electric power which communicate between 1st and 2nd antennas are non-contact, and are relayed.

EMBODIMENT of the Invention

FIG. 1 shows the example of a structure of the non-contact communication basic system 1 by which this invention is applied.

As FIG. 1 shows, the non-contact communication basic system 1 is a system in which the R/W apparatus 11 which consists of a R/W main apparatus 21 and a R/W antenna 22, and the TAG apparatus 25 which consists of the TAG antenna 23, the LS (Load Switching) modulation circuit 24, and the TAG main apparatus 25 carry out non-contact communication mutually.

InductEV, Inc.
Exhibit 1031
Page 262

Illustration is not carried out to the R/W main apparatus 21,
However
The decoding circuit for decoding a coding network, a Manchester code, etc. which are encoded to the microcomputer for controlling communication, a Manchester code, etc., the carrier-wave generating circuit which produces|generates the carrier wave (conveyance signal) of a predetermined communication carrier frequency, ASK(Amplitude Shift Keying) modulation circuit, an ASK demodulation circuit, and a power-amplification circuit, etc. are provided.
In addition, the conventional R/W main apparatus can be used as a R/W main apparatus 21.
Therefore, since he can understand easily a structure and operation|movement of the component of the R/W main apparatus 21 to an expert, detailed description is abbreviate|omitted.

The R/W antenna 22 has the resonance circuit comprised from resistance Ra, coil La, and capacitor Ca.
That is, the R/W antenna 22 is operate|moved also as a LCR resonance circuit which resonates to a predetermined communication carrier frequency while the part of the coil La operate|moves as a loop antenna.

The TAG antenna 23 has the resonance circuit comprised from resistance Rb, Coil Lb, and Capacitor Cb like the R/W antenna 22.
That is, the TAG antenna 23 is operate|moved also as a 共振す LCRC resonance circuit to a predetermined communication carrier frequency while operate|moving it as a loop antenna for the coil Lb part to carry out an inductive coupling to the R/W antenna 22 by mutual-inductance M.

Illustration is not carried out to the TAG main apparatus 25,
However
The memory for storing the power-supply generating circuit for IC, a clock extraction circuit, a logic circuit, an ASK demodulation circuit, and data etc. is provided.
In addition, the conventional TAG main apparatus can be used as a TAG main apparatus 25.
Therefore, since he can understand easily a structure and operation|movement of the component of the TAG main apparatus 25 to an expert, detailed description is abbreviate|omitted.

The LS modulation circuit 25 is a circuit where a load resistance Rc and MOS(Metal Oxide Semiconductor) switch 38 were connected in series.

Next, operation|movement of the non-contact communication basic system 1 is demonstrated.

When the TAG antenna 23 of the TAG apparatus 12 can oppose the R/W antenna 22 of the R/W apparatus 11 predetermined distance (communication distance) and is arranged at it, they will each resonate to the communication carrier frequency of the communication conveyance signal output from the R/W main apparatus 21 while carrying out the inductive coupling of the TAG antenna 23 and the R/W antenna 22 by mutual-inductance M by the magnetic field generate|occur|produced by the normal-line direction of the R/W antenna 22.
Thereby, non-contact communication of the R/W apparatus 11 and the TAG apparatus 12 can be mutually carried out now through the R/W antenna 22 and the TAG antenna 23.

While encoding in the R/W main apparatus 21, an ASK modulation|irregularity is carried out, and data (1st information is called hereafter) transmitted from the R/W main apparatus 21 is supplied to the TAG main apparatus 25 through the R/W antenna 22 which is carrying out the inductive coupling, the TAG antenna 23, and the LS modulation circuit 24 as an ASK modulating signal (communication conveyance signal on which 1st information was superimposed) (for example).

The ASK modulating signal supplied in the TAG main apparatus 25 is decoded while demodulating, and it becomes the original 1st information,
When this 1st information is the data stored in a memory, 1st information is stored in a memory, and on the other hand, when this 1st information is information read-out instructions data, based on 1st information, predetermined information is read from a memory.

In addition, the signal of the direct current|flow component removed when an ASK modulating signal

InductEV, Inc.
Exhibit 1031
Page 263

demodulated becomes power supplies, such as IC (not shown).

The data (2nd information is called hereafter) read from these responses or memories are supplied to the R/W apparatus 11 from the TAG apparatus 12 as follows.

That is, in the LS modulation circuit 24, switch 38 is switched according to 2nd information (data of 0 or 1), and the equivalent load (A load of the circuit which consists of a TAG antenna 23 and a LS modulation circuit 24 (resistance Rc)) of the antenna of the TAG apparatus 12 seen from the R/W antenna 22 is fluctuated.

This load fluctuation appears as a load fluctuation of the R/W antenna 22 in the R/W apparatus 11 by the non-contact inductive coupling between the R/W antenna 22 and the TAG antenna 23.
Therefore, the R/W main apparatus 21 detects this load fluctuation as the amplitude fluctuation component (communication conveyance signal on which 2nd information was superimposed), i.e., the ASK modulating signal, of a communication conveyance signal,
2nd information is acquired by decoding, while demodulating to this.

Thus, the non-contact communication basic system 1 is a system which performs non-contact communication using an inductive coupling,
The strength of this inductive coupling relates to the communication distance of the non-contact communication basic system 1 at the intimate contact.

Then, the present applicant analyzed the aspect of the inductive coupling between the above-mentioned R/W antenna 22 and the TAG antenna 23 as what is called double synchronization.
Hereafter, the analysis result is demonstrated.

That is, in the inductive coupling between these antennas, the coupling coefficient (The critical-coupling coefficient k0 is called hereafter) at the time of the threshold physically determined by the loss Q of each antenna circuit (Quality Factor) exists,
When this is in agreement with the coupling coefficient (The geometric coupling coefficient k is called hereafter) exactly determined by geometric factors, such as an antenna shape and distance, it utilizes becoming the greatest transmission gain,
The present applicant analyzed the aspect of the inductive coupling between the R/W antenna 22 and the TAG antenna 23.

Specifically, the critical-coupling coefficient k0 is a coefficient showing the electrical property of the antenna require|calculated as Q value of each antenna circuit shows at following Formula (1).

[EQUATION 1]
[MAT_IMAGE 000003]

However, Q1 shows Q value of the R/W antenna 22,
Moreover, Q2 shows Q value of the TAG antenna 23.

On the other hand, the geometric coupling coefficient k is a coefficient which respond|corresponds to the geometric arrangement of both antenna as above-mentioned.

When all the magnetic flux generate|occur|produced from the one antenna transverses another antenna, Namely, when two antennas of the same magnitude|size each confront and are touched
As the value of the geometric coupling coefficient k takes 1 which is the maximum value and is shown by FIG. 2A, when two antennas are arranged in the middle on one axis|shaft, the value of (When each geometric center of two antennas is in agreement) and the geometric coupling coefficient k is estimated as following Formula (2) shows.

[EQUATION 2]
[MAT_IMAGE 000004]

InductEV, Inc.
Exhibit 1031
Page 264

However, as FIG. 2A shows, r1 shows the diameter (diameter of a loop of coil La) of the R/W antenna 22, r2 shows the diameter (diameter of a loop of Coil Lb) of the TAG antenna 23, and x each shows the distance between the R/W antenna 22 and the TAG antenna 23.
That is, k(x) shows the geometric coupling coefficient k in the distance x between the R/W antenna 22 and the TAG antenna 23.

Distance x between the R/W antenna 22 and the TAG antenna 23
Correspondence with geometric coupling-coefficient k(x) calculated by this Formula (2) is shown by FIG. 2B.

However, curve (3.6 mm of diameters of an antenna) 41 shows geometric coupling-coefficient k(x) in case the diameter of the R/W antenna 22 and the TAG antenna 23 is respectively 3.6 mm (when the diameter of both antennas is small respectively).

Curve (10 mm of diameters of an antenna) 42 shows geometric coupling-coefficient k(x) in case the diameter of the R/W antenna 22 and the TAG antenna 23 is respectively 10 mm (when the diameter of both antennas is large respectively).

The diameter of one of a curve (the diameter of an antenna of 3.6 mm and combination of 10 mm) 43 is 3.6 mm among the R/W antenna 22 and the TAG antenna 23,
Geometric coupling-coefficient k(x) in case another diameter is 10 mm (when a large diameter and a small diameter are put together) is shown.

Now, since Q value of a resonance type|system|group antenna like the R/W antenna 22 and the TAG antenna 23 is generally a high value as a result, as Formula (1) shows, the value of the critical-coupling coefficient k0 turns into a small value.
Therefore, in the non-contact communication basic system 1, a small value can be applied as a value of the geometric coupling coefficient k used as an optimal communication state.
For example, when Q value of the R/W antenna 22 and the TAG antenna 23 is each set to 10, the value of the critical-coupling coefficient k0 is set to 0.1,
The non-contact communication basic system 1 will be in an optimal communication state, when the value of the geometric coupling coefficient k is 0.1.

Thus, when the non-contact communication basic system 1 is used, compared with the case where the system by which (When the system by which the resonance type|system|group is comprised is used) and a resonance type|system|group are not comprised is used, a value also with a small value of the geometric coupling coefficient k which the value of the critical-coupling coefficient k0 will become smaller, as a result will be in an optimal communication state can be applied.

In addition, the aspect of a relationship with the distance x between geometric coupling-coefficient k(x) and two antennas does not have great difference with a curve (the diameter of an antenna of 3.6 mm, and combination of 10 mm) 43, and curve (3.6 mm of diameters of an antenna) 41.
That is, even if only the antenna of any one (one side) is enlarged, the communication distance (distance between the antennas whose number is two) x from which the value of the geometric coupling coefficient k used as an optimal communication state is acquired is not extended so much.

When the value of the geometric coupling coefficient k which will be in an optimal communication state on the other hand is large and only the antenna of (For example, when the geometric coupling coefficient k is 0.15 or more in a comparison with curve 43 and curve 41) and one side is enlarged, the communication distance x from which the geometric coupling coefficient k used as an optimal communication state is obtained will become short rather.

Thus, (FIG. 2B shows -- as --) -- in the non-contact communication system 1 with which the micro TAG apparatus 12 is used, when the TAG antenna 23 is smaller than usual it, there exists (Distance x between the R/W antenna 22 and the TAG antenna 23 is shortened.) need that the R/W apparatus 11 and the micro TAG apparatus 12 are arranged at a short distance from usual so that the value of sufficient geometric coupling coefficient k for communication may be acquired.

InductEV, Inc.
Exhibit 1031
Page 265

Then, the present applicant employed the antenna sheet|seat 61 as is shown by FIG. 3 as a relay antenna (The antenna with which to extend the communication range was made into the objective), for example.

That is, the antenna coil Lc and Capacitor Cc are formed at the sheet-like board|substrate 71 as a pattern in the antenna sheet|seat 61 (for example).

In addition, the format will not be limited if Capacitor Cc is slim profile.
For example, a chip component etc. may be sufficient.

Also as the closed circuit comprised from the antenna coil Lc and Capacitor Cc, i.e., a LC resonance circuit which resonates to a predetermined communication carrier frequency, as FIG. 3B shows, this antenna sheet|seat 61 is operate|moved, while the part of the antenna coil Lc operate|moves as a loop antenna.

In addition, let the magnitude|size (diameter of a loop of Coil Lc (loop area)) of the antenna sheet|seat 61 be a thing substantially equal to the magnitude|size (diameter of a loop of coil La (loop area)) of the R/W antenna 22 in this example.

Moreover, in this example, the antenna sheet|seat 61 is comprised as a sheet|seat,
The structure will not be limited if it is the structure in which two above-mentioned operation|movement (Operation|movement as a loop antenna, and operation|movement as a LC resonance circuit) is possible.

By the way, if it is when the magnitude|size (The diameter of a loop of each coil Lb and La (loop area)) of the TAG antenna 23 and the R/W antenna 22 is substantially equal (i.e., when the magnitude|size (The diameter of a loop of each coil Lc and Lb (loop area)) of the antenna sheet|seat 61 and the TAG antenna 23 is substantially equal), the theory top of the antenna sheet|seat 61 is possible for arranging, as FIG. 4 shows.

That is, while the antenna sheet|seat 61, the TAG antenna 23, and R/W antenna 22 (The loop surface of each coil Lc, Lb, and La) become parallel, the antenna sheet|seat 61 can achieve the function of a relay-on theory antenna by the antenna sheet|seat 61 being arranged between the TAG antenna 23 and the R/W antenna 22 so that each normal line from the geometric center (The center of the loop of each coil Lc, Lb, and La) of each antenna may be in agreement.

However
As above-mentioned, the non-contact communication basic system 1 by which the micro TAG apparatus 12 is used differs in the magnitude|size (The diameter of a loop of each coil Lb and La (loop area)) of the TAG antenna 23 and the R/W antenna 22 very much.

Therefore, when the antenna sheet|seat 61 is applied to the non-contact communication basic system 1 by which the micro TAG apparatus 12 is used, the magnitude|sizes (The diameter of a loop of each coil Lc and Lb (loop area)) of the antenna sheet|seat 61 and the TAG antenna 23 will differ very much,
Even if it arranges as the curve (the diameter of an antenna of 3.6 mm and combination of 10 mm) 43 of FIG. 2B shows, and the antenna sheet|seat 61 is shown by FIG. 4, the value of sufficient geometric coupling coefficient k is not acquired.

That is, as the antenna sheet|seat 61 is shown by FIG. 4 to the non-contact communication system 1 with which the micro TAG apparatus 12 is used, when it arranges, the antenna sheet|seat 61 cannot fully exhibit the function as a relay antenna.

In addition, the arrangement as is shown by FIG. 4 is meaning in fact that the antenna sheet|seat 61 is arranged at the space between the R/W antenna 22 and the TAG antenna 23.
That is, even if [the arrangement shown by FIG. 4] it is a practical arrangement, a manufacturer etc. will be difficult to actually arrange the antenna sheet|seat 61, as FIG. 4 shows.

InductEV, Inc.
Exhibit 1031
Page 266

Then, it analyzes about the arrangement position of the antenna sheet|seat 61 in case the magnitude|sizes of the TAG antenna 23 and the antenna sheet|seat 61 differ very much from a viewpoint that the present applicant matches the geometric coupling coefficient k with the critical-coupling coefficient k0,
The appropriate arrangement position of the antenna sheet|seat 61 was elucidated.
Hereafter, the appropriate arrangement position of this analysis result 61, i.e., an antenna sheet|seat, is demonstrated.

In addition, the R/W antenna 22 is used as a very large thing, and the antenna sheet|seat 61 has a magnitude|size about the R/W antenna 22 and equivalent held to the TAG antenna 23 as above-mentioned as a precondition for the purpose of the value of sufficient geometric coupling coefficient k being acquired with respect to the R/W antenna 22.

In addition, the R/W antenna 22 and the TAG antenna 23 have a dual relation,
From this, even if the R/W antenna 22 and the TAG antenna 23 are replaced, the following arguments are established.

Since the value of the critical-coupling coefficient k0 becomes that a system is a non-resonating type|system|group with a big value when the TAG antenna 23 which differs in each magnitude|size very much, and the antenna sheet|seat 61 are used, the value of sufficient geometric coupling coefficient k is not acquired.

Then, as FIG. 5A shows, the TAG antenna 23 and the antenna sheet|seat 61 shall each be arranged here, so that a system may become a resonance type|system|group.

That is, when position (The position by which the center of the TAG antenna 23 was arranged at (0, 0, 0)) at which it matched and each center axis|shaft (geometric center) of the antenna sheet|seat 61 and the TAG antenna 23 was arranged is made into reference(standard), the TAG antenna 23 sets it as (The center of the TAG antenna 23 is arranged at a coordinate (x1,0,0) or (0,0, z1).) thing by which only z1 is shifted and arranged at x axial direction by x1 or z axial direction.

FIG. 5B shows the aspect of the geometric coupling coefficient k of the antenna sheet|seat 61 and the TAG antenna 23 in, when the antenna sheet|seat 61 and the TAG antenna 23 are arranged in this way.

When only x1 is shifted to x axial direction and the TAG antenna 23 is arranged at it as for a curve (x shift) 81 in FIG. 5B, the geometric coupling coefficient k of the antenna sheet|seat 61 and the TAG antenna 23 in (x1) (x1 is 0 thru|or 30 mm) is shown,
On the other hand, the curve (z shift) 82 shows the geometric coupling coefficient k of the antenna sheet|seat 61 and the TAG antenna 23 in (z1) (z1 is 0 thru|or 30 mm), when only z1 is shifted to z axial direction and the TAG antenna 23 is arranged at it.

As a curve (z shift) 82 shows, when the TAG antenna 23 is shifted and arranged at z axial direction, or when [as a curve (x shift) 81 shows,] the TAG antenna 23 is arranged without shifting to x axial direction so much, the value of (When the TAG antenna 23 is arranged at geometric center vicinity of an antenna sheet|seat) and sufficient geometric coupling coefficient k is not acquired.

As 81 to one point shows on the other hand, when the TAG antenna 23 is shifted to x axial direction about 17 mm and arranged at it (i.e., when it arranges at the same plane top of the antenna sheet|seat 61, and the vicinity of the conducting wire of the antenna sheet|seat 61), the value (k(17)=0.08) of the comparatively big geometric coupling coefficient k is acquired.

Thus, when it arranges, the TAG antenna 23 can receive strongerly the influence of the loop magnetic field generate|occur|produced around the conducting wire of the antenna sheet|seat 61.
That is, an inductive coupling will become stronger, if the TAG antenna 23 is arranged so that planar (The loop surface of the coil Lb of the TAG antenna 23) of the TAG antenna 23 may transverse more magnetic flux loops produced|generated by the line current which flows into the conducting wire of the antenna sheet|seat 61.

InductEV, Inc.
Exhibit 1031
Page 267

Specifically, as FIG. 6A shows, the magnetic field Hr from the R/W antenna 22 is received, a voltage is induced, and the antenna sheet|seat 61 (antenna coil Lc) generate|occur|produces an induced current ir.
This induced current ir makes the loop magnetic field Ha around the conducting wire of the antenna sheet|seat 61.

Therefore, in FIG. 5, only the analysis in case the TAG antenna 23 and the antenna sheet|seat 61 are on the same plane was carried out,
However
As above-mentioned, if it is the position which can utilize the loop magnetic field Ha around [conducting wire] the antenna coil Lc of the antenna sheet|seat 61, the arrangement position of the TAG antenna 23 will not be limited.
That is, the TAG antenna 23 and the antenna sheet|seat 61 do not need to be arranged at the same plane.

For example, as FIG. 6B shows, it is good [the antenna] to install so that the loop magnetic field Ha generate|occur|produced around the one side may effect|act greatly while the TAG antenna 23 touches the one side of any one among the rectangular antenna patterns (antenna coil Lc) of the antenna sheet|seat 61.
In this case, the value of the geometric coupling coefficient k of the antenna sheet|seat 61 and the TAG antenna 23 is raised most.

Moreover, as the arrangement (arrangement as is shown by FIG. 6B) of such a TAG antenna 23 is shown by FIG. 6C, the magnetic field Ht from the TAG antenna 23 is conversely transmitted to the antenna sheet|seat 61 efficiently.

In addition, when (The curve (x shift) 81 of FIG. 5B shows.), the TAG antenna 23, and the antenna sheet|seat 61 are arranged as above-mentioned as FIG. 6B shows, and the value of (For example, the center of the TAG antenna 23 is arranged at coordinate (17, 0, 0).) and the geometric coupling coefficient k turns into the maximum value, even if it (81 to one point shows,
When set to k(17)=0.08), 1 is not far filled with the value of the geometric coupling coefficient k,
However
Also in a comparatively small coupling coefficient, sufficient induced voltage can be obtained because the TAG antenna 23 and the antenna sheet|seat 61 have a resonance type|system|group.

On the other hand, when the TAG antenna 23 is arranged at the geometric center of the antenna sheet|seat 61, the influence with respect to the TAG antenna 23 of the loop magnetic field Ha generate|occur|produced around [conducting wire] (When the center of the TAG antenna 23 is arranged at (0, 0, 0)) and the antenna sheet|seat 61 and the influence with respect to the antenna sheet|seat 61 of the magnetic field Ht from the TAG antenna 23 become smaller very much, as a result the value of the geometric coupling coefficient k becomes smaller rather (k(0) = set to about 0.015).

This is a characteristic thing when the magnitude|sizes of the TAG antenna 23 and the antenna sheet|seat 61 differ very much.

By the way, a non-contact communication technique has the very wide application range, and various applied technologies are proposed,
However
As above-mentioned, in the once designed non-contact communication system, when the specification of the R/W antenna 22 or the TAG antenna 23 is determined, the communication distance of a system will be prescribed.

That is, in the non-contact communication system with which the TAG antenna 23 was designed small, even if the R/W antenna 22 is designed greatly how much after that, as curve (3.6 mm of diameters of an antenna and 10 mm -- put together) 43 of FIG. 2B shows, as long as the TAG antenna 23 is small, communication distance will meet the TAG antenna 23 and will become very short.
A contrary is also the same,

InductEV, Inc.
Exhibit 1031
Page 268

Both antennas need to be expanded in order to enlarge communication distance, as curve (3.6 mm of diameters of an antenna) 41 and curve (10 mm of diameters of an antenna) 42 of FIG. 2B show.

However
The R/W apparatus 11 has the degree of freedom in design of an apparatus,
It is also possible to have a big antenna,
However
The TAG apparatus 12, such as a cassette normalized on the other hand, have the small degree of freedom in design of an apparatus, and it is difficult to have a big antenna.

Then, while the antenna sheet|seat 61 using a resonance phenomenon is used for the non-contact communication basic system 1 as above-mentioned, the R/W antenna 21 and the TAG antenna 23 can communicate in sufficient communication distance through the antenna sheet|seat 61 by arranging it at the vicinity of the TAG antenna 23 appropriately.

Moreover, the TAG antenna 23 and the antenna sheet|seat 61 can be dealt with together by arranging the antenna sheet|seat 61 at the vicinity of the TAG antenna 23.

However, in order to utilize the antenna sheet|seat 61 effectively as a relay antenna, the value of the geometric coupling coefficient k of the antenna sheet|seat 61 and the R/W antenna 22 and the value of the geometric coupling coefficient k of the antenna sheet|seat 61 and the TAG antenna 23 each need to be adjusted appropriately.

In this example, the value of these two geometric coupling coefficients k shall each be matched with the value of the critical-coupling coefficient k0.
The mode of a matching of the critical-coupling coefficient k by this antenna sheet|seat 61 and the geometric coupling coefficient k0 is shown by FIG. 7.

In addition, FIG. 7B respond|corresponds to above-mentioned FIG. 5B,
On the other hand, FIG. 7C is corresponding to above-mentioned FIG. 2B.

The curve k of FIG. 7C -- as shown in 102, to the value of the critical-coupling coefficient k0 lowered by the effect of a resonance, in long distance z1, geometric coupling-coefficient k (z) is matched with the R/W antenna 22 and the antenna sheet|seat 61, and as curve k(x)101 of FIG. 7B shows, on the other hand, the difference in the magnitude|size of a diameter of an antenna which is very different with the antenna sheet|seat 61 and the TAG antenna 23 is utilized
Geometric coupling-coefficient k(x) is matched in the vicinity of the conducting wire of the antenna sheet|seat 61.

By the way, when the magnitude|size of the antenna sheet|seat 61 and the TAG antenna 23 is comparable and the antenna sheet|seat 61 and the TAG antenna 23 are arranged at vicinity, both will be in the state of a tight coupling,
The resonant frequency removes from a communication carrier frequency, and the phenomenon in which sufficient resonance is not acquired in a communication carrier frequency happens.
That is, it relates to the matching in the vicinity of the antenna sheet|seat 61 and the TAG antenna 23, and it turns out that the difference of both magnitude|size is very effective.

Thus, in fact (for example), each matched antenna is arranged, as FIG. 7A shows.

That is, when the antenna sheet|seat 61 is made into reference(standard), the R/W antenna 22 is arranged so that the surface (loop surface of coil La) and surface (loop surface of Coil Lc) of the antenna sheet|seat 61 may become parallel, while the distance of the center and center of the antenna sheet|seat 61 is set to z1.
(The R/W antenna 22 and the antenna sheet|seat 61 leave only distance z1,
It each arranges so that it may oppose.).

Moreover, the TAG antenna 23 is arranged so that the loop magnetic field around the one side

InductEV, Inc.
Exhibit 1031
Page 269

(conducting wire) of the antenna pattern may effect|act greatly, while distance with the center of the antenna sheet|seat 61 is arranged at x1, i.e., the vicinity of the arbitrary one side of the antenna pattern (coil Lc) of the antenna sheet|seat 61.

Specifically, as FIG. 8A shows (for example), the TAG apparatus 12 can be arranged on the same plane so that it may touch edge 61a of the antenna sheet|seat 61.

Thus, the non-contact communication system 111 with which the antenna sheet|seat 61 was added to the non-contact communication basic system 1 of FIG. 1 is comprised as FIG. 8B shows.
In addition, the code which respond|corresponds is attached to the part which respond|corresponds to the non-contact communication basic system 1 of FIG. 1 in FIG. 8B.

As above-mentioned in this example of a structure, the antenna sheet|seat 61 which is a relay antenna is arranged between the R/W antenna 22 of the R/W apparatus 11, and the TAG antenna 23 of the TAG apparatus 12.

As above-mentioned, the antenna sheet|seat 61 is formed as a closed circuit which consists of a coil Lc and a capacitor Cc.
That is, the antenna sheet|seat 61 is operate|moved as an antenna for the 2nd coupling|bond part 113 of the coil Lc to carry out an inductive coupling to the TAG antenna 23 by mutual-inductance M while operate|moving as a loop antenna for the 1st coupling|bond part 112 of the coil Lc to carry out an inductive coupling to the R/W antenna 22 by mutual-inductance M,
Furthermore, it operate|moves also as a LC resonance circuit which resonates to a predetermined communication carrier frequency.

The 1st coupling|bond part 112 corresponds to the loop whole of the antenna pattern (coil Lc) of the antenna sheet|seat 61 in FIG. 8A,
On the other hand, the 2nd coupling|bond part 113 mainly corresponds one edge 61a of the antenna pattern of the antenna sheet|seat 61.
That is, the inductive coupling of the 2nd coupling|bond part 113 and the TAG antenna 23 (coil Lb) is carried out by the loop magnetic field which the line current which flows into the conducting wire of the 2nd coupling|bond part 113 as above-mentioned produces|generates.

The other structure is the same as that of FIG. 1.

Operation|movement of the antenna sheet|seat 61 is as above-mentioned,
Moreover, operation|movement of the non-contact communication system 111 is the same as that of operation|movement of the non-contact communication basic system 1 of FIG. 1 fundamentally,
Therefore
Those description is abbreviate|omitted.

In addition, the antenna sheet|seat 61 and the TAG antenna 12 can freely be arranged, if the conditions that the inductive coupling of the antenna sheet|seat 61 and the TAG antenna 12 is carried out by mutual-inductance M are satisfy|filled by the circulation magnetic field which the electric current which flows into the above-mentioned conditions, i.e., the conducting wire of the arbitrary edges of the antenna pattern (coil Lc) of the antenna sheet|seat 61, and the conducting wire of the coil Lb of the TAG antenna 12 produced|generated around these conducting wire.

For example, as FIG. 9 respectively shows as the antenna sheet|seat 61 and the TAG antenna 12, it can arrange.

FIG. 9A is the example arranged on the plane in which the TAG apparatus 12 and the antenna sheet|seat 61-1 were respectively independent.
However, the 2nd connection part 113 of FIG. 8B mainly corresponds to edge 61-1a of an antenna pattern (coil Lc).

FIG. 9B is the example formed with the sheet|seat of the planar shape comprised from surface 61-2b

InductEV, Inc.
Exhibit 1031
Page 270

with the board|substrate (sheet|seat) 71 of the antenna sheet|seat 61-2 parallel to surface 61-2a and x-z plane parallel to the plane, i.e., the x-y plane, of a L-shape.
The TAG apparatus 12 (for example) is arranged so that edge 61-2c of an antenna pattern (coil Lc) may be touched on surface 61-2b.
That is, the 2nd connection part 113 of FIG. 8B mainly corresponds to edge 61-2c of an antenna pattern (coil Lc).

FIG. 9C is the example formed like FIG. 9B with the sheet|seat of the planar shape comprised from surface 61-3b with the board|substrate (sheet|seat) 71 of the antenna sheet|seat 61-3 parallel to surface 61-3a and x-z plane parallel to the plane, i.e., the x-y plane, of a L-shape.
However, surface 61-3b is smaller than surface 61-2b of FIG. 9B (for example), and comprises the magnitude|size which is the extent in which the TAG apparatus 12 is settled exactly.
That is, the TAG apparatus 12 (for example) is arranged so that surface 61-b [3] top, edge 61-3c of an antenna pattern (coil Lc) and a 61 to 3 d edge, and the 3 side of edge 61-3e may be touched.
That is, the 2nd connection part 113 of FIG. 8B mainly corresponds to edge 61-3c of an antenna pattern (coil Lc), a 61 to 3 d edge, and edge 61-3e.

Thus, the antenna sheet|seat 61 and the TAG antenna 12 can perform the arrangement in various forms where the place mounted, the magnitude|size, or the process in manufacture was considered into consideration, adjoin very much and can be arranged,
From this, it can operate|use as an apparatus with as required same the antenna sheet|seat 61 and the TAG apparatus 12.

I.e., it can regard as an antenna with integral antenna sheet|seat 61 and TAG antenna 23.
That is, if the antenna sheet|seat 61 is used, even if the TAG antenna 23 is not changed, enlargement of the communication range can be achieved easily.

However, as above-mentioned, the differences of the magnitude|size of the antenna sheet|seat 61 and the TAG antenna 23 need to differ very much.
Because, when the magnitude|size of the antenna sheet|seat 61 and the TAG antenna 23 is substantially equal temporarily, in order to match the geometric coupling coefficient k with the low critical-coupling coefficient k0, the antenna sheet|seat 61 and the TAG antenna 23 need to be released and arranged,
It is for being hard to say that enlargement of the communication range was achieved easily practically this.

Moreover, it comes to be able to do in the conventional communication system of making two antennas opposing and communicating, in particular the arrangement method, i.e., arrangement method of making it arrange so that the normal-line direction of the antenna sheet|seat 61-1 and the normal-line direction of the TAG antenna 23 of the TAG apparatus 12 may become perpendicular|vertical, as is shown by FIG. 9A, only after being unable to apply and employing the system with which the loop magnetic field of the above-mentioned circumference|surroundings of antenna conducting wire is utilized.
This arrangement method is fully exhibiting that effect also in the following application examples.

That is, FIG. 10 shows the example of a structure of the videocassette system by which the non-contact communication system 111 of FIG. 8 was applied.

Now, the videocassette system comprised from videocassette 121 on which the small-sized TAG apparatus 12 as is shown by FIG. 10A was embedded, and the videocassette player 122 to which the R/W antenna 22 was attached is commercialized.

In this system, when videocassette 121 is mounted in the videocassette player 122, the TAG apparatus 12 (TAG antenna 23) embedded on videocassette 121 and the R/W antenna 22 attached to the video recorder oppose in a short distance,
Non-contact communication is performed within the videocassette player 122.

This TAG antenna 23 is manufactured micro according to the shape of the video-recorder cassette 121,

InductEV, Inc.
Exhibit 1031
Page 271

Communication in proximity|contact distance (inside of the video deca set player 122) is mainly the antenna made into the objective.

Without also relating to such videocassette 121 and changing the TAG apparatus 12 of videocassette 121 main body, as FIG. 10B shows, the communication distance can be easily changed only by the antenna sheet|seat 61 being added.

That is, as FIG. 10B shows, when the antenna sheet|seat 61 formed at sheet type is stored in the videocassette case 122 together with videocassette 121, it means that the antenna sheet|seat 61 and the TAG antenna 23 were arranged by optimal positional relationship.
As a result, the communication distance of the TAG antenna 23 is extended seemingly.

It means that the magnitude|size of the TAG antenna 23 had been i.e. extend|expanded by the magnitude|size of the antenna sheet|seat 61 seemingly.
Communication in a long distance can be performed by the R/W apparatus (The R/W apparatus different from the R/W apparatus 11 mounted on the videocassette player 122) according to it being used.

Thus, communication distance can be extended only by the antenna sheet|seat 61 being added in the non-contact communication basic system 1 by which original and short-distance communication were made into the objective, without changing TAG apparatus 12 main body.
For example, a user inserts the videocassette case 122 in videocassette 121 with the antenna sheet|seat 61,
Non-contact communication can be performed only by holding it up to another R/W apparatus.

Furthermore, when the antenna sheet|seat 61 is a shape like FIG. 9A, as above-mentioned (FIG. 10B shows -- as), it forms at one sheet of sheet type, and also (for example), in the case of a shape like FIG. 9B, the antenna sheet|seat 61 can be formed in the shape of a cassette index sheet (L-shape).

Thus, the determinant of communication distance becomes the combination of the R/W antenna 22 and the antenna sheet|seat 61 instead of the combination of the R/W antenna 22 and the TAG antenna 23 by changing the magnitude|size of the antenna sheet|seat 61 in accordance with the R/W antenna 22 which respond|corresponds.
This is meaning exactly that it is considered that the antenna of the TAG apparatus 12 became the antenna sheet|seat 61 from the R/W antenna 22.

That is, the antenna sheet|seat 61 can have the same effect as the time of the TAG antenna 23 being changed by installing appropriate for the vicinity of the small TAG antenna 23.
Therefore, a manufacturer etc. is not based on the magnitude|size of the TAG antenna 23, but designs a new R/W antenna,
The communication distance of the TAG apparatus 12 is extensible.

Furthermore, since the antenna sheet|seat 61 is used in contact with the TAG antenna 23, both can integrally be treated and it becomes a very convenient high thing in actual utilization.

Furthermore, the antenna sheet|seat 61 is an antenna apparatus whose degrees of freedom on an arrangement is comparatively high while being able to implement|achieve by very simple structure called only 2 elements of an antenna pattern (coil Lc) and the capacitor Cc of the small capacity|capacitance for adjusting a resonance and being able to manufacture it at very few|small cost.

Therefore, as for the non-contact communication system 111 with which the antenna sheet|seat 61 was applied, the TAG antenna 23 was unavoidably designed small from the reasons of a space,
However
In the case where extension of the communication distance of the TAG apparatus 12 is required according to a use etc., it is an in particular effective system.

Moreover, the non-contact communication system 111 can make several R/W antennas other than R/W antenna 22 respond|correspond to one TAG antenna 23.

InductEV, Inc.
Exhibit 1031
Page 272

That is, a manufacturer etc. can manufacture a system or an apparatus etc. with which several R/W antennas can be designed according to the communication distance corresponding to an arrangement space or a use, as a result various non-contact communication technique other than the above-mentioned videocassette system is utilized.

Thus, the non-contact communication system 111 utilizes the loop magnetic field around [conducting wire] an antenna,
It is characterized by the above-mentioned,
The non-contact communication system using the magnetic field generate|occur|produced in the conventional normal-line direction of antenna-pattern plane (loop plane of a coil) is a clearly different system.

By the way, the method of utilizing the loop magnetic field around [conducting wire] this antenna is the case where the antenna sheet|seat 61 is not used,
Comprising:
At the time so that the magnitude|sizes of a two antenna may differ very much
WHEREIN:
It can apply similarly.

That is, when the TAG antenna 23 is arranged at center position 131 vicinity of the antenna sheet|seat 61 so that the normal-line direction and normal-line direction of the R/W antenna 22 may be in agreement as FIG. 11 shows in the non-contact communication basic system 1 of FIG. 1, when very large [the R/W antenna 22] compared with the TAG antenna 23, the R/W apparatus 11 becomes difficult [it / to read information in the TAG apparatus 12].

As for the R/W apparatus 11, information can be read in the TAG apparatus 12 when the TAG antenna 23 is arranged at an edge which, on the other hand, receives the loop magnetic field generate|occur|produced around the conducting wire of the R/W antenna 22, i.e., edge position 132 vicinity.

Thus, above-mentioned method (The method using the loop magnetic field around [conducting wire] an antenna) can be applied to a non-contact communication system which arranges a TAG antenna at the edge of a R/W antenna, and communicates.

In addition, in FIG. 11, the R/W antenna 22 is illustrated about the case of being very large, compared with the TAG antenna 23,
However
The method (The method using the loop magnetic field around [conducting wire] an antenna) which the R/W antenna 22 above-mentioned also about the case of being very small, compared with the TAG antenna 23 can be applied.

Moreover, in this specification, a system is a processing means,
And the apparatus whole comprised by several apparatus is shown.

ADVANTAGE of the Invention

As mentioned above, according to the non-contact communication system, non-contact communication auxiliary|assistance apparatus, and method of this invention, communication distance is extensible.

BRIEF DESCRIPTION OF THE DRAWINGS

[FIG. 1]
It is the figure which shows the example of a structure of the non-contact communication basic system by which this invention is applied.
[FIG. 2]
It is the figure which shows the distance between each of the R/W antenna of the non-contact communication basic system of FIG. 1, and a TAG antenna, a diameter, and the related example of a

InductEV, Inc.
Exhibit 1031
Page 273

geometric coupling coefficient.
[FIG. 3]
It is the figure which shows the example of a structure of the antenna sheet|seat with which this invention is applied.
[FIG. 4]
It is the figure which shows the example of a structure of the arrangement of the antenna sheet|seat of FIG. 3.
[FIG. 5]
It is the figure which shows an arrangement position with the antenna sheet|seat of FIG. 3, and the TAG antenna of the non-contact communication basic system of FIG. 1, and the related example of a geometric coupling coefficient.
[FIG. 6]
It is a figure explaining the related example of the arrangement position of the principle of the antenna sheet|seat of FIG. 3, and the TAG antenna of the antenna sheet|seat of FIG. 3, and the non-contact communication basic system of FIG. 1.
[FIG. 7]
It is the figure which shows typically the example of a matching of the geometric coupling coefficient of the antenna sheet|seat of FIG. 3, and the TAG antenna of the non-contact communication basic system of FIG. 1, and a matching of the geometric coupling coefficient of the antenna sheet|seat of FIG. 3, and the R/W antenna of the non-contact communication basic system of FIG. 1.
[FIG. 8]
It is the figure which shows the example of a structure of the non-contact communication system with which this invention by which the antenna sheet|seat of FIG. 3 was mounted on the non-contact communication basic system of FIG. 1 is applied.
[FIG. 9]
It is the figure which shows a structure of the example of mounting of the antenna sheet|seat of the non-contact communication system of FIG. 8, and a TAG antenna.
[FIG. 10]
It is the figure which shows the example of a structure of the videocassette system by which the non-contact communication system of FIG. 8 was applied.
[FIG. 11]
It is the figure which shows a structure of the application example of the arrangement of the TAG antenna of the non-contact communication basic system of FIG. 1, and a R/W antenna.

Description of Symbols

1 Non-contact communication basic system,
11 R/W apparatus,
12 TAG apparatus,
21 R/W main apparatus,
22 R/W antenna,
23 TAG antenna,
24LS modulation circuit,
25 TAG main apparatus,
61 Antenna sheet|seat,
71 Board|substrate,
111 Non-contact communication apparatus,
112 1st coupling|bond part,
113 2nd coupling|bond part,
Ra,
Rb,
Rc Resistance,
La,
Lb Coil,
Lc Antenna coil,
Ca,
Cb,
Cc capacitor,
Ha,

InductEV, Inc.
Exhibit 1031
Page 274

Hr,
Ht Magnetic field,
Ir,
It Induced current
[FIG. 1]
[MAT_IMAGE 000005]
[FIG. 2]
[MAT_IMAGE 000006]
[FIG. 3]
[MAT_IMAGE 000007]
[FIG. 4]
[MAT_IMAGE 000008]
[FIG. 5]
[MAT_IMAGE 000009]
[FIG. 6]
[MAT_IMAGE 000010]
[FIG. 7]
[MAT_IMAGE 000011]
[FIG. 8]
[MAT_IMAGE 000012]
[FIG. 9]
[MAT_IMAGE 000013]
[FIG. 10]
[MAT_IMAGE 000014]
[FIG. 11]
[MAT_IMAGE 000015]

(Translation from Thomson Reuters)

Citations

Citation *Record level*

Expand Citing Patents (25)

Expand Cited Patents (12)

Cited Non-patents (0)

Other

DWPI Title Terms

NON CONTACT COMMUNICATE SYSTEM INTEGRATE CIRCUIT CARD READ WRITING APPARATUS TAG PERFORMANCE INDUCTIVE COUPLE RESPECTIVE ANTENNA SHEET

DWPI Related Accession Numbers

-

Custom Fields

Test

-

Relevance

-

Product Name

-

Docket number

-

Notes

-

Copyright 2007-2013 THOMSON REUTERS

No documents available for this priority number.

Espacenet

Bibliographic data: JP2004166459 (A) — 2004-06-10

NON-CONTACT FEEDING DEVICE

Inventor(s): YAMAMOTO KITAO; SASAKI MANABU ± (YAMAMOTO KITAO, ; SASAKI MANABU)

Applicant(s): MITSUI SHIPBUILDING ENG ± (MITSUI ENG & SHIPBUILD CO LTD)

Classification: - **international:** ***B60L5/00; H01F38/14; H01M10/44; H02J17/00; H02J7/00;*** (IPC1-7): B60L5/00; H01F38/14; H01M10/44; H02J17/00; H02J7/00
- **cooperative:** Y02E60/12

Application number: JP20020332448 20021115

Priority number(s): JP20020332448 20021115

Abstract of JP2004166459 (A)

PROBLEM TO BE SOLVED: To provide a non-contact feeding device that can feed power only when a gap between a feeding position and a receiving one is within a prescribed value. ; SOLUTION: A secondary battery mounted device 3 that uses a secondary battery (not shown) as a power source is provided with a feeding control portion 12. This feeding control portion 12 starts feeding power when proximity sensors 13 detect that the facing surfaces of the feeding portion 2-1 of a power supply 2 that comes close to the device 3 and feeds power by an electromagnetic induction means in a non-contact way to charge the secondary battery and of the receiving portion 3-1 of the device 3 are close to each other with a little gap. Feeding is stopped when a receiving detection sensor 11 does not detect within a certain period of time that the receiving portion 3-1 has reached a chargeable position. ; COPYRIGHT: (C)2004,JPO

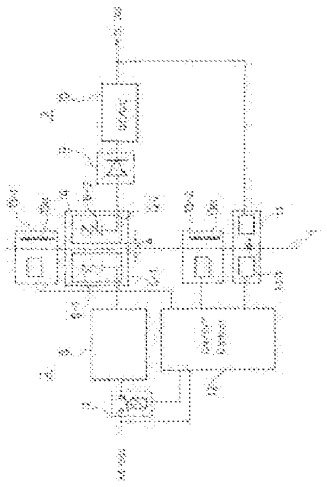

Last updated: 13.03.2013 Worldwide Database 5.8.8.8; 92p

InductEV, Inc.
Exhibit 1031
Page 277

(19)日本国特許庁(JP)　(12)公開特許公報(A)　(11)特許出願公開番号
特開2004-166459
(P2004-166459A)
(43)公開日　平成16年6月10日(2004.6.10)

(51)Int.Cl.[7]		F I			テーマコード（参考）
H02J	7/00	H02J	7/00	301D	5G003
B60L	5/00	H02J	7/00	301C	5H030
H01F	38/14	B60L	5/00	B	5H105
H01M	10/44	H01M	10/44	Z	
H02J	17/00	H02J	17/00	B	

審査請求 未請求　請求項の数 7　OL　（全 9 頁）　最終頁に続く

(21)出願番号　特願2002-332448(P2002-332448)
(22)出願日　平成14年11月15日(2002.11.15)

(71)出願人　000005902
三井造船株式会社
東京都中央区築地５丁目６番４号
(74)代理人　100066865
弁理士　小川　信一
(74)代理人　100066854
弁理士　野口　賢照
(74)代理人　100068685
弁理士　斎下　和彦
(72)発明者　山本　喜多男
東京都中央区築地５丁目６番４号　三井造船株式会社内
(72)発明者　佐々木　学
東京都中央区築地５丁目６番４号　三井造船株式会社内

最終頁に続く

(54)【発明の名称】非接触給電装置

(57)【要約】
【課題】給電部位と受電部位との間隔が所定値内にあるときのみ給電可能となる非接触型給電装置を提供する。
【解決手段】２次電池（図示せず）を動力源とする２次電池搭載装置３に、接近して電磁誘導手段により非接触的に給電して２次電池に充電する電源装置２の給電部２－１と、２次電池搭載装置３の受電部３－１とが僅かな隙間を開けて相対する面が接近したことを近接センサ１３が検知すると給電を開始し、受電検知センサ１１が一定時間内に受電部３－１が充電可能状態に達したことを検知しないと給電を停止する給電制御部１２を設けた。
【選択図】　図１

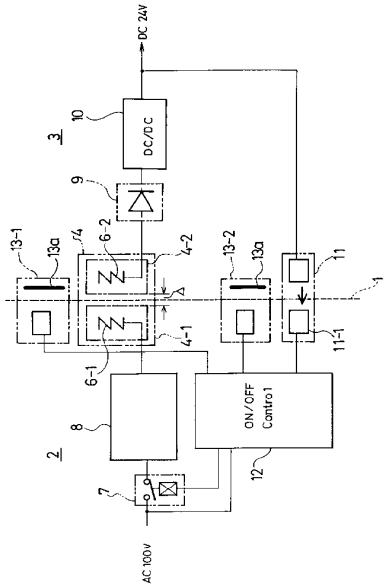

InductEV, Inc.
Exhibit 1031
Page 278

【特許請求の範囲】
【請求項１】
２次電池を動力源として作動する２次電池搭載装置と、前記２次電池に充電する電源装置とが、充電時にいずれかまたは相互に、また自動的にまたは遠隔操作により接近して電磁誘導手段により非接触的に給電する給電装置において、前記電源装置の給電部と、前記２次電池搭載装置の受電部とが接近し給電可能状態となると、少なくとも僅かな隙間を開けて相対する面が生じるように前記両装置を形成し、前記相対する面が予め定めた間隔以内に接近すると給電開始信号を出力する近接センサと、前記受電部が充電可能状態に達したことを検知する受電検知センサとを設け、前記近接センサが前記接近を検知すると、給電を開始し、　給電開始後一定時間内に前記受電検知センサが受電開始信号を検知すると給電を継続し、何らかの原因で前記一定時間内に前記受電開始信号を検知しないと給電を停止する給電制御部を設けた非接触給電装置。
【請求項２】
前記近接センサが、交流電流により励磁する電磁コイルと、前記２次電池搭載装置に取り付けた透磁率の高い金属体とからなり、前記電磁コイルによる励磁で前記金属板に発生するうず電流により生じる前記電磁コイルの負荷変動を検知して前記隙間の大きさを検知することからなる請求項１記載の非接触給電装置。
【請求項３】
前記受電検知センサが、前記２次電池搭載装置が受電して発生する電圧が所定値に達すると光を発する発光素子と、前記電源装置に設けられ、前記発光により作動する受光素子とで構成することからなる請求項１～２のいずれかに記載の非接触給電装置。
【請求項４】
前記受電検知センサが、前記２次電池搭載装置が受電して発生する電圧が所定値に達すると超音波を発信する超音波発信素子と、前記電源装置に設けられ、前記超音波を受信する超音波受信素子とで構成することからなる請求項１～２のいずれかに記載の非接触給電装置。
【請求項５】
前記近接センサの励磁を間　的に行なうようにした請求項１～４のいずれかに記載の非接触給電装置。
【請求項６】
前記２次電池を動力源として作動する装置が水中に敷設された装置であり、前記給電装置の給電部を水中走行ロボットに設けたことからなる請求項１～５記載の非接触給電装置。
【請求項７】
前記２次電池を動力源として作動する装置が自走式作業ロボットであり、前記給電装置は該作業ロボットの待機中に充電するようにしたことからなる請求項１～５記載の非接触給電装置。
【発明の詳細な説明】
【０００１】
【発明の属する技術分野】
本発明は、電磁誘導作用を利用して給電する非接触給電装置に関し、更に詳細には、例えば海中施設などに搭載する２次電池に給電装置を搭載した水中ロボットを使用して給電する際に、前記施設の受電部位にロボットの給電部位が正しく配置されたことを自動的に確認して給電を行なう非接触給電装置に関するものである。
【０００２】
【従来の技術】
リチウム電池など、高性能、軽量、且つ密閉型２次電池が開発されたため、長時間電源から切り離して機器を作動させることが可能となり、またコードレス電話器、電気髭剃り器、電気自動車など各種分野で、それぞれの必要性からコンセントなどの電気接点を使用しないで充電できる非接触型給電装置、即ち電磁誘導方式を用いた給電装置が提案され、また実際に使用されるに至っている。

InductEV, Inc.
Exhibit 1031
Page 279

【０００３】
前記電磁誘導方式による給電上の問題として、何らかの原因で受電部位に金属が置かれると、電磁誘導作用により発熱し、装置が加熱されて故障の原因となったり、最悪の場合火災を起こすなどのおそれが生じる。
【０００４】
その対策として、電気髭剃り器（以下シェーバーという）の非接触充電器の小型化技術を開示した「小型高効率共振トランスを用いた非接触充電器」（松下電工技報（ＤＥＣ．２００１）８８～９２ページ）には、充電器上にシェーバーが置かれているか否かの識別を行なう手段として、トランス１次側コアおよびトランス２次側コアにそれぞれ電力伝達用１次、２次巻線の外に、本体検知・充電制御信号用巻線および間欠発振用巻線を設け、電力伝達時以外は間欠発振用巻線により励磁高周波電流を供給し、シェーバー本体側から受電したことを知らせる本体検知信号が出力されない限り充電操作を行なわないようにすることで、シェーバー以外の対象に電力を供給しないようにしたものである。
【０００５】
【非特許文献１】
桂　嘉志、山下　幹広、安部　秀明共著「小型高効率共振トランスを用いた非接触充電器」松下電工技報（２００１年１２月、Ｐ．８８～９２）
【０００６】
【発明が解決しようとする課題】
ところで、例えば海水の水質などを長期間継続的に定点観測する要望が高まっている。そのための動力源として各種一次電池を使用すると設備費は安価となるが使い捨てであるため環境保全重視の社会的要望に反し好ましくなく、各種二次電池に太陽電池や波動発電機を組み合わせる方法は気象・海象の影響を受けるため作動の確実性に欠け、１０ワット程度の小電力用としてのみ可能性があると認められる。また燃料電池は開発中の技術であり、また商用電力を直接供給するには海底ケーブルの敷設工事が必要となり経済上の問題が生じる。
【０００７】
したがって各種二次電池を水中施設に取り付け、水中ロボットにより充電するという組み合わせが最も実際的であると考えられる。例えば、５０ワット負荷を７日間（１５８時間）使用すると消費電力量はで８．４ｋＷｈとなり、これを仮に２ｋＷで充電すると約４時間で充電できる。したがって水中ロボットによる充電方式は、長期定点観測の実現性に最も高い方式の一つと考えられる。
【０００８】
このような場合、給電方式は水中であるから当然非接触型給電方式となるが、給電装置に鉄などの透磁率の高い異物が近づいた場合、これを誘導加熱してしまうおそれがある。かかる事態の回避と、視界が十分でない海中での遠隔操縦により確実に給電側と受電側の鉄心が正確に一定範囲内に接近させる必要があるという問題がある。
【０００９】
本発明は、以上の問題に着目してなされたものであり、経済的理由などで送電ケーブルの敷設が困難な海中設備などに装備した２次電池に給電する給電装置において、給電部位と受電部位との間隔が所定値内にあるときに給電可能となる非接触型給電装置を提供することを目的としている。
【００１０】
【課題を解決するための手段】
上記目的を達成するための本発明の非接触型給電装置は、２次電池を動力源として作動する２次電池搭載装置と、前記２次電池に充電する電源装置とが、充電時にいずれかまたは相互に、また自動的にまたは遠隔操作により接近して電磁誘導手段により非接触的に給電する給電装置において、前記電源装置の給電部と、前記２次電池搭載装置の受電部とが接近し給電可能状態となると、少なくとも僅かな隙間を開けて相対する面が生じるように前記両装置を形成し、前記相対する面が予め定めた間隔以内に接近すると給電開始信号を出

InductEV, Inc.
Exhibit 1031
Page 280

力する近接センサと、前記受電部が充電可能状態に達したことを検知する受電検知センサとを設け、前記近接センサが前記接近を検知すると、給電を開始し、　給電開始後一定時間内に前記受電検知センサが受電開始信号を検知すると給電を継続し、何らかの原因で前記一定時間内に前記受電開始信号を検知しないと給電を停止する給電制御部を設けたものである。

【００１１】

前記何らかの原因とは、例えば近接センサが２次電池搭載装置以外の物体に反応し、誤作動した場合、前記受電部が故障している場合などである。

【００１２】

前記近接センサには特に限定は無く、光を利用するもの、静電容量の変化を利用するもの、超音波を利用するもの、空気圧を利用するもの、電磁誘導によるうず電流による励磁コイルの入力インピーダンス変化を利用するものなど、一般に知られたものの中から適宜選択できる。水中ロボットに適用するものとしては、前記うず電流方式、即ち交流電流により励磁する電磁コイルと、前記２次電池搭載装置に取り付けた透磁率の高い金属体とからなり、前記電磁コイルによる励磁で前記金属板に発生するうず電流により生じる前記電磁コイルの負荷変動を検知して前記隙間の大きさを検知する方法の採用が好ましい。

【００１３】

前記受電検知センサには特に限定はないが、例えば前記２次電池搭載装置が受電して発生する電圧が所定値に達すると光を発する発光素子と、前記電源装置に設けられ、前記発光により作動する受光素子とで構成する方法、前記２次電池搭載装置が受電して発生する電圧が所定値に達すると超音波を発信する超音波発信素子と、前記電源装置に設けられ、前記超音波を受信する超音波受信素子とで構成する方法などを採用することができる。さらに、前記発光、　超音波などの信号がノイズの影響を受けないようにするために、受電検知センサに変調・復調手段を設けることができる。

【００１４】

前記近接センサの励磁を間　的に行なうと、うず電流による発熱により、装置が加熱をされることを少なくできるので、一般的に好ましいが、本発明はこれに限定されない。

【００１５】

本発明の非接触型給電装置を適用する装置には特に限定はないが、前記２次電池を動力源として作動する装置が水中に敷設された装置であり、前記給電装置の給電部を水中走行ロボットに設けたもの、前記２次電池を動力源として作動する装置が掃除ロボット、巡回監視ロボットなどの自走式作業ロボットであり、前記給電装置は該作業ロボットの待機中に充電するようにしたものなどを適用対象として例示することができる。

【００１６】

【発明の実施の形態】

以下添付の図面を参照する一実施の形態を示し本発明の非接触型給電装置を具体的に説明する。

【００１７】

図１に示す回路は、本発明の非接触型給電装置の基本回路を説明するものであり、中央に示す破線１の左側が電源装置２の回路部分であり、右側が２次電池搭載装置３の回路部分であり、ギャップ結合トランス４は電源装置２側と２次電池搭載装置３側とに跨って設けられている。

【００１８】

ギャップ結合トランス４は、トランス１次側４－１とトランス２次側４－２とに分割されており、その鉄心５は、図２に示すように、互いに開口部分が向き合うコないしＵ状の１次側鉄心５－１および２次側鉄心５－２からなり、それぞれ１次コイル６－１および２次コイル６－２を巻きつけ、１次側鉄心５－１および２次鉄心５－２の合わせ部分のギャップΔを所定値以下とすることで過大な励磁無効電力が生じないように設計されている。

【００１９】

なお一例として、２５０～３００Ｗ、周囲温度を－１０～４０℃とした場合のギャップ結

合トランス４として、鉄心にフェライトを使用し、　鉄心の幅を２０ｍｍ、積層厚みを５０ｍｍ、両側の腕状部の鉄心長さを４０ｍｍ、リッツ線コイルを巻く辺の鉄心長さを１２０ｍｍとし、全体を絶縁性樹脂で水密とした容器内に、ギャップΔが５ｍｍ以下とすることができる。

【００２０】

図１の説明に戻り、トランス１次側４－１の１次コイル６－１と電源との間にはリレーからなる電源スイッチ７および周波数変換器８を介してＡＣ１００Ｖなどの交流電源（以下電源Ｅ）に接続した。なお周波数変換器８は低周波電源を高周波に変換するものであり、例えばＡ／Ｄ変換器とインバータとを組み合わせたものを使用することができる。

【００２１】

トランス２次側４－２の２次コイル６－２は、発生した高周波電圧を整流器９によって直流に変換し、直流電圧安定化回路１０を介して２次電池（図示せず）と受電検知センサ１１とに与えるようにした。

【００２２】

電源装置２の電源Ｅに対し、電源スイッチ７および周波数変換器８と並列的にマイクロコンピュータからなる給電制御部　１２を設け、これに受電検知センサ１１および近接センサ１３－１および１３－２（以下総称するときは１３で表す）の出力信号を入力し、電源スイッチ７をオン・オフ制御するように構成し、近接センサ１３－１および１３－２から接近完了信号が出力されると、電源スイッチ７をオンすると共に計時プログラム（タイマー）を作動させ、一定時間内に受電検知センサ１１から受電検知信号が出力されないと、給電制御部１２は電源スイッチ７をオフするようにプログラムした。

【００２３】

次に受電検知センサ１１および近接センサ１３を、図３～５に示す第２実施の形態よって、より具体的に説明する。図３は第２実施の形態による非接触型給電装置を海中１４に敷設した昇降式水質計測ブイ１５用の水中ステーション１６と充電兼データ回収用水中ロボット（以下単に水中ロボットという）１７とによって実施したものである。なお本発明は上記水質計測用以外の水中施設に利用できることは説明を要しないことは明らかである。

【００２４】

第２実施の形態による非接触型給電装置のギャップ型結合トランス４のトランス１次側４－１（図４）は、水中ロボット１７の給電部３－１に設け、信号伝送、索条などの機能を有する電源ケーブル１９によって母船１８に搭載した発電機（図示せず）を電源とし給電制御部（図３および４に図示せず）に接続した。またトランス２次側４－２（図４）を収容する受電部３－２は、水中ステーション１６（図３）に設けた電源部（２次電池）２０と一体的に取り付けた。図４に示すギャップ結合トランス４のギャップΔは、図４に示す２箇所の間隙δ_1　およびδ_2　の和の１／２（δ_1　／　２＋δ_2　／　２）に一致する。

【００２５】

ここで図３に示す水中ステーション１６および水中ロボット１７に図示されている部材について説明する。水中ステーション１６に付した符号１６ａは昇降式水質計測ブイ１５を水中ステーション１６に係留し、且つブイ１６内の機器を作動させる電源用リード線、観測に必要とする信号を伝達する信号線等を組み込んだケーブル、１６ｂはケーブル１６ａを巻き取り・繰り出す電動機内臓のドラム、１６ｃは観測用電子機器容器、１６ｄは水中ロボット１７にデータを伝送する音響リンク、１６ｅは海底の岩盤等に固定するための脚部である。

【００２６】

また水中ロボット１７に付した符号１７ａはスラスタであり前進・後退用スラスタが３機、上昇・下降用スラスタが２機、側方移動用スラスタが１機使用されており、　１７ｂは水中ロボット本体、１７ｃは前記本体１７ｂの端部を覆う透明アクリル樹脂製のドームであり、その中心軸上に操縦用ＣＣＤカメラを備えている。１７ｄはヘッドライト、１７ｅは超音波ソナー、１７ｆは保護用フレームである。また図４に示す符号４ａは水密とした

InductEV, Inc.
Exhibit 1031
Page 282

樹脂製容器である。

【００２７】

第２実施の形態のギャップ結合トランス４は、結合されると図２に示したギャップ結合トランス４と同じであるが、１次側鉄心５－１は、図４に示すように鉄心の１辺の一部を切り出した形状とし、したがって１次コイル６－１も幅を狭く、分厚く巻き付け、外見上は平板状に形成した。２次コイル６－２は、図１に示したものと同様にした。２点鎖線で示した２次側鉄心５－２および２次コイル６－２は、水中ロボット１７に設けた給電部２－１が受電部３－１に結合すると図１で示した非接触型給電装置の基本回路が形成され、前記説明の手順に従って充電できることを示している。

【００２８】

ところで、第２の実施の形態で使用した受電検知センサ１１の信号出力素子１１－２には発光素子、例えば発光ダイオードを使用し、光による受電検知信号回路１１－１にはフォトトランジスタを使用したが、フォトダイオードなどたの受光素子を使用することもできる。更に超音波を使用することもでき、　これらの信号を変調し、ノイズによる作動ミスを防止することもできる。また近接センサ１３の金属板１３ａにうず電流を発生させる電磁コイル１３ｂの鉄心１３ｃにはコないしＵ状鉄心を使用した。但し、棒状鉄心を使用することもできる。

【００２９】

なお第２実施の形態による近接センサ１３が検出する隙間は、第１実施の形態のギャップΔではなく、１次側鉄心５－１の軸心と、これと向き合う２次側鉄心５－２の軸心５ａ（図　４）との不一致の許容範囲である。したがって、受電部３－１に給電部２－１を結合させるには、最終段階で給電部２－１を前進・後退のみの動きとする必要がある。したがって、前進後退のみの動きとする場合近接センサ１３は少なくとも１個設けるのでもよい。なお、図４に示す符号１１ａは光透過用の窓である。

【００３０】

そのために、例えば図５に示すような先端が拡開した鞘状ガイド２１－１と挿入棒２１－２を、受電検知センサ１１および近接センサ１３それぞれの給電部２－１および受電部３－１に設ける前面２２の複数箇所、例えば４箇所に突き出し状に設けるとよい。但し本発明はこのガイドに限定されず、水中ロボット１７を正確に誘導できるものであればいずれのものも使用できる。

【００３１】

【発明の効果】

以上説明したように本発明の非接触型給電装置は、ギャップ結合トランスが許容範囲内に接近したことを検知すると給電を開始し、一定時間内に受電したことが確認されないと給電を停止するようにしたので、受電装置以外の金属体などに給電し、過熱による事故の発生を無くすことができるし、異物が間にはさまって給電できない場合も検知することができる。

【図面の簡単な説明】

【図１】本発明の第１の実施の形態による非接触型給電装置の基本回路図である。

【図２】図１に示す給電装置に使用したギャップ結合トランスの鉄心形状を示す平面説明図である。

【図３】本発明の第２の実施の形態による非接触型給電装置の全体の構成を示す説明図である。

【図４】図３に示すギャップ結合トランスの構成を示す説明図である。

【図５】図３に示す給電装置の給電部および受電部に設けたガイドの一例を示す側面図である。

【符号の説明】

２　　電源装置（例えば水中ロボット１７）

２－１　　給電部

３　　２次電池搭載装置（例えば水中ステーション１６）

３－１　受電部
１１　受電検知センサ
１２　給電制御部
１３－１　近接センサ
１３－２　近接センサ

【図１】

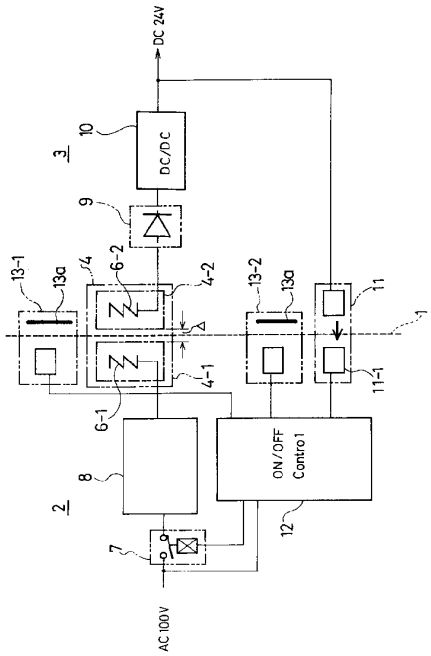

【図２】

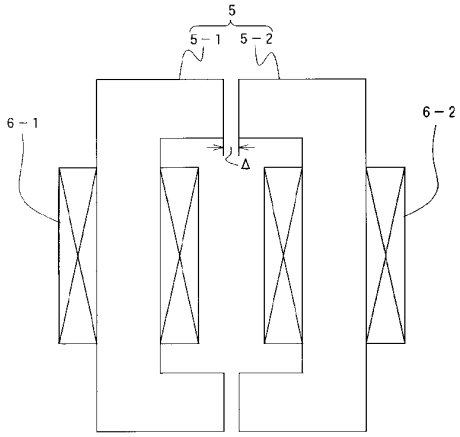

InductEV, Inc.
Exhibit 1031
Page 284

【図３】

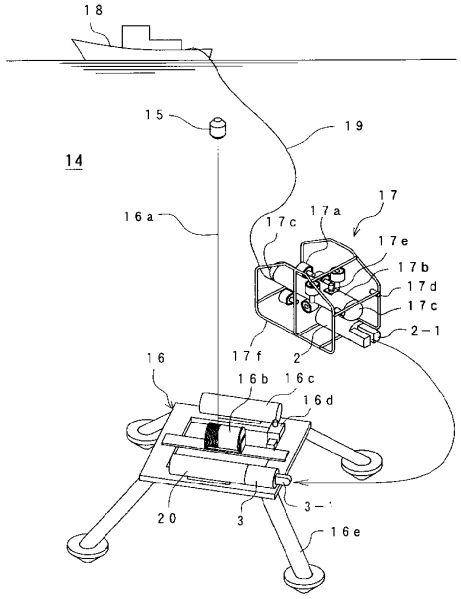
18
15
19
14
16a
17
17c
17a
17e
17b
17d
17c
2-1
17f
2
16
16b
16c
16d
3-1
20
3
16e

【図４】

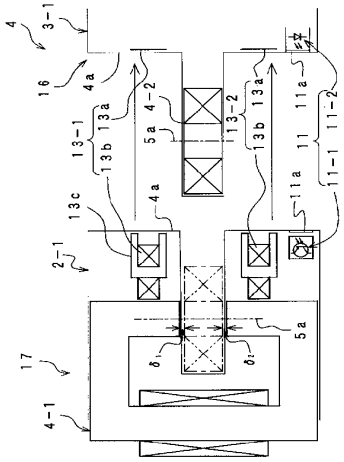
4
3-1
16
4a
13-1
13a
13b
5a
4-2
13-2
13b
13a
11a
11
11-1
11-2
13c
4a
2-1
5a
17
4-1

【図５】

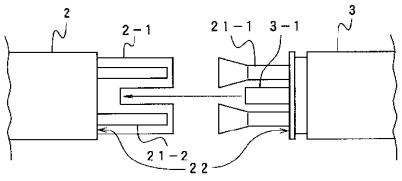
2
2-1
21-1
3-1
3
21-2
22

フロントページの続き

(51)Int.Cl.[7]	FI	テーマコード（参考）
	H01F 28/00	B

Fターム(参考) 5G003 AA01 BA01 FA02 GB08
5H030 BB09 BB21 FF51
5H105 AA01 BA09 BB10 DD10 GG04 GG15

InductEV, Inc.
Exhibit 1031
Page 286

JP2004-166459 Machine Translation

* NOTICES *

JPO and INPIT are not responsible for any
damages caused by the use of this translation.

1.This document has been translated by computer. So the translation may not reflect the original precisely.
2.**** shows the word which can not be translated.
3.In the drawings, any words are not translated.

CLAIMS
[Claim(s)]
[Claim 1]
A rechargeable battery mounting apparatus which operates as the source of power, and an electric power unit which charges the aforementioned rechargeable battery a rechargeable battery, In a feeder system which approaches either or mutual by remote control automatically again, and supplies electric power to it in non-contact by an electromagnetic guiding means at the time of charge, If a feed part of the aforementioned electric power unit and a receiving part of the aforementioned rechargeable battery mounting apparatus approach and it will be in a state for which electric power can be supplied, A proximity sensor which will output an electric supply start signal if it approaches within an interval which a surface which forms both the aforementioned equipment and carries out the aforementioned relativity defined previously so that a surface which opens a slight gap at least and faces may produce, If a power receiving detection sensor which detects that the aforementioned receiving part reached a state which can be charged is provided and the aforementioned proximity sensor detects the aforementioned approach, electric supply is started -- a non-contact feeder system which provided a power feeding control part which will stop electric supply if electric supply will be continued if the aforementioned electricity-receiving detecting sensor detects a power receiving start signal in fixed time after an electric supply start, and the aforementioned power receiving start signal is not detected in said fixed time by a certain cause.
[Claim 2]
A non-contact feeder system comprising:
A magnet coil which the aforementioned proximity sensor excites by alternating current.
It consists of a metal body with high amplitude permeability attached to the aforementioned rechargeable battery mounting apparatus, a load change of the aforementioned magnet coil produced by an eddy current generated in the aforementioned metal plate in excitation by the aforementioned magnet coil is detected, and a size of the aforementioned gap is detected.

[Claim 3]
A non-contact feeder system comprising:
A light emitting device which will emit light if voltage which the aforementioned rechargeable battery mounting apparatus receives and the aforementioned power receiving detection sensor generates reaches a specified value.

It constitutes from a photo detector which is provided by the aforementioned electric power unit and operates by the aforementioned luminescence.

[Claim 4]
A non-contact feeder system comprising:
An ultrasonic dispatch element which will send an ultrasonic wave if voltage which the aforementioned rechargeable battery mounting apparatus receives and the aforementioned power receiving detection sensor generates reaches a specified value.
It constitutes from an ultrasonic wave receiving element which is provided by the aforementioned electric power unit and receives the aforementioned ultrasonic wave.

[Claim 5]
The non-contact feeder system according to any one of claims 1 to 4 which was made to excite the aforementioned proximity sensor intermittently.
[Claim 6]
The non-contact feeder system according to claim 1 to 5 which equipment which operates considering the aforementioned rechargeable battery as the source of power is the equipment laid underwater, and consists of having provided a feed part of the aforementioned feeder system to an underwater traveling robot.
[Claim 7]
The non-contact feeder system according to claim 1 to 5 which equipment which operates considering the aforementioned rechargeable battery as the source of power is a self-propelled working robot, and consists of this working robot having charged the aforementioned feeder system waiting.

DETAILED DESCRIPTION
[Detailed Description of the Invention]
[0001]
[Field of the Invention]
The present invention about the non-contact feeder system which supplies electric power using an electromagnetic induction action more particularly, For example, when supplying electric power using the underwater robot which mounted the feeder system on the rechargeable battery mounted on a sea institution etc., it is related with the non-contact feeder system which supplies electric power to the power receiving part of the aforementioned institution by checking automatically that the electric supply part of a robot has been arranged correctly.
[0002]
[Description of the Prior Art]
Become possible to separate from a power supply for a long time, and to operate apparatus, since high performance, a light weight, and encapsulated type rechargeable batteries, such as a lithium cell, were developed, and in various fields, such as a cordless telephone and electric shaver machine and an electric vehicle, The noncontact feeder system which can be charged without using electric contact, such as an electric socket, from each necessity, i.e., the feeder system using an electromagnetic induction type, is proposed, and it has actually come to be used.
[0003]
As a problem of electric supply by the aforementioned electromagnetic induction type, if metal is put on a power receiving part by a certain cause, it generates heat by an electromagnetic

induction action, and equipment will be heated and fear, such as becoming a cause of failure, or starting a fire, when the worst, will arise.
[0004]
As the measure, to "the noncontact charger using a small efficient resonant transformer" (88-92 pages of Matsushita Electric Works technical reports (DEC.2001)) which disclosed the miniaturization technology of the noncontact charger of an electric shaver machine (henceforth a shaver), As a means to identify whether the shaver is placed on the battery charger, To the primary transformer side core and a transformer secondary core, respectively 1 order for power transmission, Besides secondary winding, main part detection, the winding for charging control signals, and the winding for an intermittent oscillation are provided, The excitation high frequency current is supplied with the winding for an intermittent oscillation except the time of power transmission, and it is made not to supply electric power to objects other than Javor because it is made not to perform charge operation unless the main part detection signal which tells having received transmitted electricity from the main part side of a shaver is outputted.
[0005]
[Nonpatent literature 1]
Katsura ****, Yamashita Mikihiro, Abe The Hideaki collaboration "noncontact charger using small efficient resonant transformer" Matsushita Electric Works technical report (December, 2001, p.88-92)
[0006]
[Problem to be solved by the invention]
By the way, the requests which make the fixed point observation of the water quality of sea water, etc. continuously for a long period of time, for example are mounting. Since it will become inexpensive [an installation cost] if various primary batteries are used as the source of power for that, but it is throwing away, it is contrary to the social request focused on environmental protection, and is not preferable, It is admited that it lacks in the certainty of an operation since the method of combining a solar cell and a wave-motion generator with various rechargeable batteries is affected by the influence of the weather and a hydrographic condition, and it is possible only as an about 10-W object for small power. A fuel cell is the technology under development, and the laying work of a submarine cable is needed for carrying out direct supply of the commercial power, and the problem of economy arises.
[0007]
Therefore, various rechargeable batteries are attached to an underwater institution, and it is thought that combination of charging with an underwater robot is the most practical. for example, if 50-W load is used for seven days (158 hours), amount of used electricity will come out and will be set to 8.4 kWh, and if this is charged at 2 kW, it can charge in about 4 hours. Therefore, the charging system by an underwater robot is considered to be one of the highest systems by the implementability of a long-term fixed point observation.
[0008]
In such a case, since a feed system is underwater, naturally it becomes a noncontact feed system, but when a foreign matter with iron high amplitude permeability approaches a feeder system, there is a possibility of carrying out induction heating of this. There is a problem of the iron core by the side of electric supply and power receiving making it approach into a fixed range correctly reliably by evasion of this situation and remote control in the inside of the sea whose field of view is not sufficient.

[0009]
In the feeder system which supplies electric power to the rechargeable battery with which the present invention was made paying attention to the above problem, and laying of power transmission cables equipped difficult sea equipment etc. by the economic reason etc., It aims at providing the noncontact feeder system whose electric supply is attained when the interval of an electric supply part and a power receiving part is in a specified value.
[0010]
[Means for solving problem]
The noncontact feeder system of the present invention for attaining the above-mentioned purpose, The rechargeable battery mounting apparatus which operates as the source of power, and the electric power unit which charges the aforementioned rechargeable battery a rechargeable battery, In the feeder system which approaches either or mutual by remote control automatically again, and supplies electric power to it in non-contact by an electromagnetic guiding means at the time of charge, If the feed part of the aforementioned electric power unit and the receiving part of the aforementioned rechargeable battery mounting apparatus approach and it will be in the state for which electric power can be supplied, The proximity sensor which will output an electric supply start signal if it approaches within the interval which the surface which forms both the aforementioned equipment and carries out the aforementioned relativity defined previously so that the surface which opens a slight gap at least and faces may produce, If the power receiving detection sensor which detects that the aforementioned receiving part reached the state which can be charged is provided and the aforementioned proximity sensor detects the aforementioned approach, electric supply is started -- if the aforementioned electricity-receiving detecting sensor detects a power receiving start signal in the fixed time after an electric supply start, electric supply will be continued, and if the aforementioned power receiving start signal is not detected in the above-mentioned fixed time by a certain cause, the power feeding control part which stops electric supply will be provided.
[0011]
A proximity sensor reacts to objects other than a rechargeable battery mounting apparatus, for example, and a certain above-mentioned cause is a case where the aforementioned receiving part is out of order etc., when it malfunctions.
[0012]
What limitation in particular does not have in the aforementioned proximity sensor, and uses light, the thing using change of electrostatic capacitance, It can choose suitably from things generally known, such as a thing using an ultrasonic wave, a thing using pneumatic pressure, and a thing using input-impedance change of the exciting coil by the eddy current by electromagnetic induction. The magnet coil excited with the aforementioned eddy current system, i.e., alternating current, as what is applied to an underwater robot, Adoption of the method of consisting of a metal body with high amplitude permeability attached to the aforementioned rechargeable battery mounting apparatus, detecting the load change of the aforementioned magnet coil produced by the eddy current generated in the aforementioned metal plate in excitation by the aforementioned magnet coil, and detecting the size of the aforementioned gap is preferable.
[0013]
The light emitting device which will emit light if the voltage which the aforementioned rechargeable battery mounting apparatus receives and generates, for example reaches a specified value although there is no limitation in particular in the aforementioned power receiving detection sensor, The ultrasonic dispatch element which will send an ultrasonic wave if the

voltage which the method and the aforementioned rechargeable battery mounting apparatus which are constituted from a photo detector which is provided by the aforementioned electric power unit and operates by the aforementioned luminescence receive and generate reaches a specified value, The aforementioned electric power unit provides and the method of constituting from an ultrasonic wave receiving element which receives the aforementioned ultrasonic wave, etc. can be adopted. In order that signals, such as the aforementioned luminescence and an ultrasonic wave, may not be affected by the influence of a noise, modulation and a demodulation means can be provided in a power receiving detection sensor.

[0014]

Since it can lessen being heated in equipment by generation of heat by an eddy current if the aforementioned proximity sensor is excited intermittently, generally it is preferable, but the present invention is not limited to this.

[0015]

Although there is no limitation in particular in the equipment which applies the noncontact feeder system of the present invention, the equipment which operates considering the aforementioned rechargeable battery as the source of power is the equipment laid underwater, What provided the feed part of the aforementioned feeder system to the underwater traveling robot, and the equipment which operates as the source of power the aforementioned rechargeable battery A cleaning robot, It is self-propelled working robots, such as a round monitor robot, and the aforementioned feeder system can illustrate as an applied object what this working robot charged waiting.

[0016]

[Mode for carrying out the invention]

The 1 embodiment which refers to attached Drawings below is shown, and the noncontact feeder system of the present invention is described specifically.

[0017]

The circuit shown in Fig.1 is what describes the basic circuit of the noncontact feeder system of the present invention, The left-hand side of the dashed line 1 shown in the center is a circuit part of the electric power unit 2, right-hand side is a circuit part of the rechargeable battery mounting apparatus 3, and the gap junction transformer 4 is provided ranging over the electric power unit 2 side and the rechargeable battery mounting apparatus 3 side.

[0018]

The gap junction transformer 4 is divided into the transformer secondary 4-2 the primary transformer side 4-1, and the iron core 5, As shown in Fig.2, it consists of the primary side iron core 5-1 and the secondary side iron core 5-2 of KO thru/or the shape of U where the opening part faces mutually, The primary coil 6-1 and the secondary coil 6-2 are twisted, respectively, and it is designed so that excessive excitation reactive power may not arise because below a specified value carries out the gap delta of the doubling portions of the primary side iron core 5-1 and the secondary iron core 5-2.

[0019]

As an example, as the gap junction transformer 4 at the time of making 250-300W, and ambient air temperature into -10-40 degree C, a ferrite is used for an iron core -- the iron core length of the neighborhood which rolls 20 mm and lamination thickness for the width of an iron core, and rolls 40 mm and a litz wire coil for 50 mm and the iron core length of the brachial part of both sides can be 120 mm, and the gap delta is 5 mm or less into the container which made the whole watertight with insulating resin.

[0020]
It returned to the description of Fig.1 and connected with AC power supply (following power supply E), such as AC100V, via the electric power switch 7 and the frequency converter 8 which consist of relays between the primary coil 6-1 by the side of [4-1] the primary transformer, and a power supply. The frequency converter 8 can convert a low frequency power source to high frequency, and can use what combined the A/D converter and the inverter.
[0021]
The secondary coil 6-2 of the transformer secondary 4-2 converts the generated high frequency voltage to a direct current with the rectifier 9, and gave it to the rechargeable battery (not shown) and the electricity-receiving detecting sensor 11 via DC voltage stabilizing circuit 10.
[0022]
Power feeding control part 12 which becomes the electric power switch 7 and the frequency converter 8 from a microcomputer in parallel is provided to the power supply E of the electric power unit 2, The power receiving detection sensor 11, the proximity sensor 13-1, and the output signal of 13-2 (when naming generically below, it expresses with 13) are input into this, If it constitutes so that on-off control of the electric power switch 7 may be carried out, and an approach completion signal is outputted from the proximity sensor 13-1 and 13-2, while turning on the electric power switch 7 -- a time check -- when the program (timer) was operated and a power receiving detection signal was not outputted from the electricity-receiving detecting sensor 11 in fixed time, the power feeding control part 12 was programmed to turn off the electric power switch 7.
[0023]
next, a 2nd embodiment that shows the power receiving detection sensor 11 and the proximity sensor 13 to Fig.3 - 5 -- it describes more specifically. Fig.3 is carried out with the underwater station 16 for rise-and-fall-system water quality measurement buoy 15 which laid the noncontact feeder system by a 2nd embodiment to sea 14, and the robot 17 in charge and data recovery service water (only henceforth an underwater robot). It is clear use [the present invention / for underwater institutions other than for / above-mentioned / water quality measurement] not to require a description.
[0024]
The primary transformer side 4-1 (Fig.4) of the gap type coupling transformer 4 of the noncontact feeder system by a 2nd embodiment, It provided to the underwater robot's 17 feed part 3-1, and with the power cable 19 which has a function of a signal transmission, a wire rope, etc., the generator (not shown) mounted on the mother ship 18 was used as the power supply, and it connected with the power feeding control part (not shown to Fig.3 and 4). The receiving part 3-2 which accommodates the transformer secondary 4-2 (Fig.4) was integrally attached with the power supply section (rechargeable battery) 20 which provided to the underwater station 16 (Fig.3).The gap delta of the gap junction transformer 4 shown in Fig.4 corresponds to one half of the sums of two gap delta1 shown in Fig.4, and delta2 (delta1/ 2+delta2 / 2).
[0025]
It describes about the component currently illustrated by the underwater station 16 and the underwater robot 17 which show Fig.3 here. The code 16a given to the underwater station 16 moors the rise-and-fall-system water quality measurement buoy 15 to the underwater station 16, And the cable incorporating the lead for power supplies which operates the apparatus in the buoy 16, the signal wire which transmits the signal needed for observation, etc., The sound link which 16b transmits the drum of winding and the electric motor internal organs which it lets out for the

cable 16a, and 16c transmits the electronic device container for observation, and transmits 16 d of data to the underwater robot 17, and 16e are the legs for fixing to submarine bedrock etc.
[0026]
The code 17a given to the underwater robot 17 is a thruster, and the thruster for advance / retreat Three sets, the thruster for a rise / descent -- two sets and lateral movement business -- one thruster is used -- 17b is an underwater robot main part, 17c is a dome made of wrap transparent acrylic resin about the end of the aforementioned main part 17b, and it has the CCD camera for operation on the medial axis. As for 17 d, an ultrasonic sonar and 17 f of a headlight and 17e are the frames for protection. The code 4a shown in Fig.4 is the resin made container made watertight.
[0027]
The gap junction transformer 4 of a 2nd embodiment is the same as the gap junction transformer 4 shown in Fig.2, if combined, but. The primary side iron core 5-1 was made into the form which cut out a part of one side of an iron core as shown in Fig.4, therefore the winding and appearance top formed width in plate-like also for the primary coil 6-1 thick narrowly. The secondary coil 6-2 was made to be the same as that of what was shown in Fig.1. If the feed part 2-1 provided to the underwater robot 17 combines with the receiving part 3-1, the basic circuit of the noncontact feeder system shown by Fig.1 will be formed, and the secondary side iron core 5-2 and the secondary coil 6-2 which were shown according to the two-dot chain line show that it can charge according to the procedure of the aforementioned description.
[0028]
By the way, although the light emitting device, for example, a light emitting diode, was used for the signal output element 11-2 of the power receiving detection sensor 11 used by the second embodiment and the photo-transistor was used for the power receiving detection signal circuit 11-1 by light, photo detectors of **, such as a photo-diode, can also be used. an ultrasonic wave can also be used -- the signal of these can be modulated and the operation mistake by a noise can also be prevented. KO thru/or U-like iron core were used for the iron core 13c of the magnet coil 13b which makes the metal plate 13a of the proximity sensor 13 generate an eddy current. However, a rod-like iron core can also be used.
[0029]
The gap which the proximity sensor 13 by a 2nd embodiment detects is the inharmonious tolerance level of not the gap delta of a 1st embodiment but the axial center of the primary side iron core 5-1, and the axial center 5a (Fig.4) of the secondary side iron core 5-2 which faces this. Therefore, in order to combine the feed part 2-1 with the receiving part 3-1, it is necessary to consider the feed part 2-1 as movement only toward advance and retreat in a culmination. Therefore, when considering it as movement only toward a moved back, what is provided may be sufficient as at least one proximity sensor 13. The code 11a shown in Fig.4 is a window for light transmission.
[0030]
therefore, the vaginate guide 21-1 and the driving post 21-2 which the tip as shown, for example in Fig.5 extended -- the power receiving detection sensor 11 and the proximity sensor 13 -- it is good for two or more places of the front face 22 provided to each feed part 2-1 and receiving part 3-1, for example, four places, to provide in the shape of ejection. However, the present invention is not limited to this guide, but if the underwater robot 17 can be derived correctly, it can use anything.
[0031]

[Effect of the Invention]
As described above, the noncontact feeder system of the present invention, Since it was made to stop electric supply when having started electric supply when it detected that the gap junction transformer approached into tolerance level, and having received transmitted electricity in fixed time was not checked, Electric power can be supplied to metal bodies other than power receiving equipment, etc., and the occurrence of the accident by overheating can be lost, and a foreign matter can detect, also when the way cannot supply electric power in between.
[Brief Description of the Drawings]
[Drawing 1]It is a basic circuit figure of the noncontact feeder system by the first embodiment of the present invention.
[Drawing 2]It is a plane explanatory view showing the iron core form of the gap junction transformer used for the feeder system shown in Fig.1.
[Drawing 3]It is an explanatory view showing the composition of the whole noncontact feeder system by the second embodiment of the present invention.
[Drawing 4]It is an explanatory view showing the composition of the gap junction transformer shown in Fig.3.
[Drawing 5]It is a side view showing an example of the guide provided to the feed part and receiving part of the feeder system which are shown in Fig.3.
[Explanations of letters or numerals]
2 Electric power unit (for example, underwater robot 17)
2-1 Feed part
3 Rechargeable battery mounting apparatus (for example, underwater station 16)
3-1 Receiving part
11 Power receiving detection sensor
12 Power feeding control part
13-1 Proximity sensor
13-2 Proximity sensor

TECHNICAL FIELD
[Field of the Invention]
The present invention about the non-contact feeder system which supplies electric power using an electromagnetic induction action more particularly, For example, when supplying electric power using the underwater robot which mounted the feeder system on the rechargeable battery mounted on a sea institution etc., it is related with the non-contact feeder system which supplies electric power to the power receiving part of the aforementioned institution by checking automatically that the electric supply part of a robot has been arranged correctly.
[0002]

PRIOR ART
[Description of the Prior Art]
Become possible to separate from a power supply for a long time, and to operate apparatus, since high performance, a light weight, and encapsulated type rechargeable batteries, such as a lithium cell, were developed, and in various fields, such as a cordless telephone and electric shaver machine and an electric vehicle, The noncontact feeder system which can be charged without using electric contact, such as an electric socket, from each necessity, i.e., the feeder system using an electromagnetic induction type, is proposed, and it has actually come to be used.

[0003]
As a problem of electric supply by the aforementioned electromagnetic induction type, if metal is put on a power receiving part by a certain cause, it generates heat by an electromagnetic induction action, and equipment will be heated and fear, such as becoming a cause of failure, or starting a fire, when the worst, will arise.
[0004]
As the measure, to "the noncontact charger using a small efficient resonant transformer" (88-92 pages of Matsushita Electric Works technical reports (DEC.2001)) which disclosed the miniaturization technology of the noncontact charger of an electric shaver machine (henceforth a shaver), As a means to identify whether the shaver is placed on the battery charger, To the primary transformer side core and a transformer secondary core, respectively 1 order for power transmission, Besides secondary winding, main part detection, the winding for charging control signals, and the winding for an intermittent oscillation are provided, The excitation high frequency current is supplied with the winding for an intermittent oscillation except the time of power transmission, and it is made not to supply electric power to objects other than Javor because it is made not to perform charge operation unless the main part detection signal which tells having received transmitted electricity from the main part side of a shaver is outputted.
[0005]
[Nonpatent literature 1]
Katsura ****, Yamashita Mikihiro, Abe The Hideaki collaboration "noncontact charger using small efficient resonant transformer" Matsushita Electric Works technical report (December, 2001, p.88-92)
[0006]

EFFECT OF THE INVENTION
[Effect of the Invention]
As described above, the noncontact feeder system of the present invention, Since it was made to stop electric supply when having started electric supply when it detected that the gap junction transformer approached into tolerance level, and having received transmitted electricity in fixed time was not checked, Electric power can be supplied to metal bodies other than power receiving equipment, etc., and the occurrence of the accident by overheating can be lost, and a foreign matter can detect, also when the way cannot supply electric power in between.

TECHNICAL PROBLEM
[Problem to be solved by the invention]
By the way, the requests which make the fixed point observation of the water quality of sea water, etc. continuously for a long period of time, for example are mounting. Since it will become inexpensive [an installation cost] if various primary batteries are used as the source of power for that, but it is throwing away, it is contrary to the social request focused on environmental protection, and is not preferable, It is admited that it lacks in the certainty of an operation since the method of combining a solar cell and a wave-motion generator with various rechargeable batteries is affected by the influence of the weather and a hydrographic condition, and it is possible only as an about 10-W object for small power. A fuel cell is the technology under development, and the laying work of a submarine cable is needed for carrying out direct supply of the commercial power, and the problem of economy arises.
[0007]

Therefore, various rechargeable batteries are attached to an underwater institution, and it is thought that combination of charging with an underwater robot is the most practical. for example, if 50-W load is used for seven days (158 hours), amount of used electricity will come out and will be set to 8.4 kWh, and if this is charged at 2 kW, it can charge in about 4 hours. Therefore, the charging system by an underwater robot is considered to be one of the highest systems by the implementability of a long-term fixed point observation.
[0008]
In such a case, since a feed system is underwater, naturally it becomes a noncontact feed system, but when a foreign matter with iron high amplitude permeability approaches a feeder system, there is a possibility of carrying out induction heating of this. There is a problem of the iron core by the side of electric supply and power receiving making it approach into a fixed range correctly reliably by evasion of this situation and remote control in the inside of the sea whose field of view is not sufficient.

[0009]
In the feeder system which supplies electric power to the rechargeable battery with which the present invention was made paying attention to the above problem, and laying of power transmission cables equipped difficult sea equipment etc. by the economic reason etc., It aims at providing the noncontact feeder system whose electric supply is attained when the interval of an electric supply part and a power receiving part is in a specified value.
[0010]

MEANS
[Means for solving problem]
The noncontact feeder system of the present invention for attaining the above-mentioned purpose, The rechargeable battery mounting apparatus which operates as the source of power, and the electric power unit which charges the aforementioned rechargeable battery a rechargeable battery, In the feeder system which approaches either or mutual by remote control automatically again, and supplies electric power to it in non-contact by an electromagnetic guiding means at the time of charge, If the feed part of the aforementioned electric power unit and the receiving part of the aforementioned rechargeable battery mounting apparatus approach and it will be in the state for which electric power can be supplied, The proximity sensor which will output an electric supply start signal if it approaches within the interval which the surface which forms both the aforementioned equipment and carries out the aforementioned relativity defined previously so that the surface which opens a slight gap at least and faces may produce, If the power receiving detection sensor which detects that the aforementioned receiving part reached the state which can be charged is provided and the aforementioned proximity sensor detects the aforementioned approach, electric supply is started -- if the aforementioned electricity-receiving detecting sensor detects a power receiving start signal in the fixed time after an electric supply start, electric supply will be continued, and if the aforementioned power receiving start signal is not detected in the above-mentioned fixed time by a certain cause, the power feeding control part which stops electric supply will be provided.
[0011]
A proximity sensor reacts to objects other than a rechargeable battery mounting apparatus, for example, and a certain above-mentioned cause is a case where the aforementioned receiving part is out of order etc., when it malfunctions.

[0012]
What limitation in particular does not have in the aforementioned proximity sensor, and uses light, the thing using change of electrostatic capacitance, It can choose suitably from things generally known, such as a thing using an ultrasonic wave, a thing using pneumatic pressure, and a thing using input-impedance change of the exciting coil by the eddy current by electromagnetic induction. The magnet coil excited with the aforementioned eddy current system, i.e., alternating current, as what is applied to an underwater robot, Adoption of the method of consisting of a metal body with high amplitude permeability attached to the aforementioned rechargeable battery mounting apparatus, detecting the load change of the aforementioned magnet coil produced by the eddy current generated in the aforementioned metal plate in excitation by the aforementioned magnet coil, and detecting the size of the aforementioned gap is preferable.
[0013]
The light emitting device which will emit light if the voltage which the aforementioned rechargeable battery mounting apparatus receives and generates, for example reaches a specified value although there is no limitation in particular in the aforementioned power receiving detection sensor, The ultrasonic dispatch element which will send an ultrasonic wave if the voltage which the method and the aforementioned rechargeable battery mounting apparatus which are constituted from a photo detector which is provided by the aforementioned electric power unit and operates by the aforementioned luminescence receive and generate reaches a specified value, The aforementioned electric power unit provides and the method of constituting from an ultrasonic wave receiving element which receives the aforementioned ultrasonic wave, etc. can be adopted. In order that signals, such as the aforementioned luminescence and an ultrasonic wave, may not be affected by the influence of a noise, modulation and a demodulation means can be provided in a power receiving detection sensor.
[0014]
Since it can lessen being heated in equipment by generation of heat by an eddy current if the aforementioned proximity sensor is excited intermittently, generally it is preferable, but the present invention is not limited to this.
[0015]
Although there is no limitation in particular in the equipment which applies the noncontact feeder system of the present invention, the equipment which operates considering the aforementioned rechargeable battery as the source of power is the equipment laid underwater, What provided the feed part of the aforementioned feeder system to the underwater traveling robot, and the equipment which operates as the source of power the aforementioned rechargeable battery A cleaning robot, It is self-propelled working robots, such as a round monitor robot, and the aforementioned feeder system can illustrate as an applied object what this working robot charged waiting.
[0016]
[Mode for carrying out the invention]
The 1 embodiment which refers to attached Drawings below is shown, and the noncontact feeder system of the present invention is described specifically.
[0017]
The circuit shown in Fig.1 is what describes the basic circuit of the noncontact feeder system of the present invention, The left-hand side of the dashed line 1 shown in the center is a circuit part of the electric power unit 2, right-hand side is a circuit part of the rechargeable battery mounting

apparatus 3, and the gap junction transformer 4 is provided ranging over the electric power unit 2 side and the rechargeable battery mounting apparatus 3 side.
[0018]
The gap junction transformer 4 is divided into the transformer secondary 4-2 the primary transformer side 4-1, and the iron core 5, As shown in Fig.2, it consists of the primary side iron core 5-1 and the secondary side iron core 5-2 of KO thru/or the shape of U where the opening part faces mutually, The primary coil 6-1 and the secondary coil 6-2 are twisted, respectively, and it is designed so that excessive excitation reactive power may not arise because below a specified value carries out the gap delta of the doubling portions of the primary side iron core 5-1 and the secondary iron core 5-2.
[0019]
As an example, as the gap junction transformer 4 at the time of making 250-300W, and ambient air temperature into -10-40 degree C, a ferrite is used for an iron core -- the iron core length of the neighborhood which rolls 20 mm and lamination thickness for the width of an iron core, and rolls 40 mm and a litz wire coil for 50 mm and the iron core length of the brachial part of both sides can be 120 mm, and the gap delta is 5 mm or less into the container which made the whole watertight with insulating resin.
[0020]
It returned to the description of Fig.1 and connected with AC power supply (following power supply E), such as AC100V, via the electric power switch 7 and the frequency converter 8 which consist of relays between the primary coil 6-1 by the side of [4-1] the primary transformer, and a power supply. The frequency converter 8 can convert a low frequency power source to high frequency, and can use what combined the A/D converter and the inverter.
[0021]
The secondary coil 6-2 of the transformer secondary 4-2 converts the generated high frequency voltage to a direct current with the rectifier 9, and gave it to the rechargeable battery (not shown) and the electricity-receiving detecting sensor 11 via DC voltage stabilizing circuit 10.
[0022]
Power feeding control part 12 which becomes the electric power switch 7 and the frequency converter 8 from a microcomputer in parallel is provided to the power supply E of the electric power unit 2, The power receiving detection sensor 11, the proximity sensor 13-1, and the output signal of 13-2 (when naming generically below, it expresses with 13) are input into this, If it constitutes so that on-off control of the electric power switch 7 may be carried out, and an approach completion signal is outputted from the proximity sensor 13-1 and 13-2, while turning on the electric power switch 7 -- a time check -- when the program (timer) was operated and a power receiving detection signal was not outputted from the electricity-receiving detecting sensor 11 in fixed time, the power feeding control part 12 was programmed to turn off the electric power switch 7.
[0023]
next, a 2nd embodiment that shows the power receiving detection sensor 11 and the proximity sensor 13 to Fig.3 - 5 -- it describes more specifically. Fig.3 is carried out with the underwater station 16 for rise-and-fall-system water quality measurement buoy 15 which laid the noncontact feeder system by a 2nd embodiment to sea 14, and the robot 17 in charge and data recovery service water (only henceforth an underwater robot). It is clear use [the present invention / for underwater institutions other than for / above-mentioned / water quality measurement] not to require a description.

[0024]
The primary transformer side 4-1 (Fig.4) of the gap type coupling transformer 4 of the noncontact feeder system by a 2nd embodiment, It provided to the underwater robot's 17 feed part 3-1, and with the power cable 19 which has a function of a signal transmission, a wire rope, etc., the generator (not shown) mounted on the mother ship 18 was used as the power supply, and it connected with the power feeding control part (not shown to Fig.3 and 4). The receiving part 3-2 which accommodates the transformer secondary 4-2 (Fig.4) was integrally attached with the power supply section (rechargeable battery) 20 which provided to the underwater station 16 (Fig.3).The gap delta of the gap junction transformer 4 shown in Fig.4 corresponds to one half of the sums of two gap delta1 shown in Fig.4, and delta2 (delta1/ 2+delta2 / 2).
[0025]
It describes about the component currently illustrated by the underwater station 16 and the underwater robot 17 which show Fig.3 here. The code 16a given to the underwater station 16 moors the rise-and-fall-system water quality measurement buoy 15 to the underwater station 16, And the cable incorporating the lead for power supplies which operates the apparatus in the buoy 16, the signal wire which transmits the signal needed for observation, etc., The sound link which 16b transmits the drum of winding and the electric motor internal organs which it lets out for the cable 16a, and 16c transmits the electronic device container for observation, and transmits 16 d of data to the underwater robot 17, and 16e are the legs for fixing to submarine bedrock etc.
[0026]
The code 17a given to the underwater robot 17 is a thruster, and the thruster for advance / retreat Three sets, the thruster for a rise / descent -- two sets and lateral movement business -- one thruster is used -- 17b is an underwater robot main part, 17c is a dome made of wrap transparent acrylic resin about the end of the aforementioned main part 17b, and it has the CCD camera for operation on the medial axis. As for 17 d, an ultrasonic sonar and 17 f of a headlight and 17e are the frames for protection. The code 4a shown in Fig.4 is the resin made container made watertight.
[0027]
The gap junction transformer 4 of a 2nd embodiment is the same as the gap junction transformer 4 shown in Fig.2, if combined, but. The primary side iron core 5-1 was made into the form which cut out a part of one side of an iron core as shown in Fig.4, therefore the winding and appearance top formed width in plate-like also for the primary coil 6-1 thick narrowly. The secondary coil 6-2 was made to be the same as that of what was shown in Fig.1. If the feed part 2-1 provided to the underwater robot 17 combines with the receiving part 3-1, the basic circuit of the noncontact feeder system shown by Fig.1 will be formed, and the secondary side iron core 5-2 and the secondary coil 6-2 which were shown according to the two-dot chain line show that it can charge according to the procedure of the aforementioned description.
[0028]
By the way, although the light emitting device, for example, a light emitting diode, was used for the signal output element 11-2 of the power receiving detection sensor 11 used by the second embodiment and the photo-transistor was used for the power receiving detection signal circuit 11-1 by light, photo detectors of **, such as a photo-diode, can also be used. an ultrasonic wave can also be used -- the signal of these can be modulated and the operation mistake by a noise can also be prevented. KO thru/or U-like iron core were used for the iron core 13c of the magnet coil 13b which makes the metal plate 13a of the proximity sensor 13 generate an eddy current. However, a rod-like iron core can also be used.

[0029]
The gap which the proximity sensor 13 by a 2nd embodiment detects is the inharmonious tolerance level of not the gap delta of a 1st embodiment but the axial center of the primary side iron core 5-1, and the axial center 5a (Fig.4) of the secondary side iron core 5-2 which faces this. Therefore, in order to combine the feed part 2-1 with the receiving part 3-1, it is necessary to consider the feed part 2-1 as movement only toward advance and retreat in a culmination. Therefore, when considering it as movement only toward a moved back, what is provided may be sufficient as at least one proximity sensor 13. The code 11a shown in Fig.4 is a window for light transmission.
[0030]
therefore, the vaginate guide 21-1 and the driving post 21-2 which the tip as shown, for example in Fig.5 extended -- the power receiving detection sensor 11 and the proximity sensor 13 -- it is good for two or more places of the front face 22 provided to each feed part 2-1 and receiving part 3-1, for example, four places, to provide in the shape of ejection. However, the present invention is not limited to this guide, but if the underwater robot 17 can be derived correctly, it can use anything.
[0031]

DESCRIPTION OF DRAWINGS
[Brief Description of the Drawings]
[Drawing 1]It is a basic circuit figure of the noncontact feeder system by the first embodiment of the present invention.
[Drawing 2]It is a plane explanatory view showing the iron core form of the gap junction transformer used for the feeder system shown in Fig.1.
[Drawing 3]It is an explanatory view showing the composition of the whole noncontact feeder system by the second embodiment of the present invention.
[Drawing 4]It is an explanatory view showing the composition of the gap junction transformer shown in Fig.3.
[Drawing 5]It is a side view showing an example of the guide provided to the feed part and receiving part of the feeder system which are shown in Fig.3.
[Explanations of letters or numerals]
2 Electric power unit (for example, underwater robot 17)
2-1 Feed part
3 Rechargeable battery mounting apparatus (for example, underwater station 16)
3-1 Receiving part
11 Power receiving detection sensor
12 Power feeding control part
13-1 Proximity sensor
13-2 Proximity sensor

No documents available for this priority number.

Espacenet

Bibliographic data: JP2004201458 (A) — 2004-07-15

TRANSFORMER FOR MULTIPLE-OUTPUT POWER SUPPLY

Inventor(s): KOJIMA HIDEKI ± (KOJIMA HIDEKI)

Applicant(s): TOKO INC ± (TOKO INC)

Classification: **- international:** ***H01F30/04; H02M3/28; H02M3/338;*** (IPC1-7): H01F30/04; H02M3/28; H02M3/338

- cooperative:

Application number: JP20020369380 20021220

Priority number(s): JP20020369380 20021220

Also published as: JP3643581 (B2)

Abstract of JP2004201458 (A)

PROBLEM TO BE SOLVED: To provide a transformer for multiple-output power supply wherein the output voltage/current characteristics are provided with a drooping characteristic and necessity for an overcurrent protection circuit is obviated. SOLUTION: The transformer is for a multiple-output power supply. The transformer comprises a non-contact power supply which is provided with a primary coil for supplying power and a secondary coil for receiving power and transmits power with the primary coil, and the secondary coil opposed to each other; and a power supply which obtains a plurality of direct-current output voltages from a tertiary coil provided coaxially with the winding axis of the primary coil. The transformer comprises the primary coil, secondary coil, and tertiary coil. The windings of the primary coil and the tertiary coil are wound on the same core shaft. The winding of the secondary coil is wound on another core shaft. A partition plate made of the core material is provided between the primary coil and the tertiary coil. ; COPYRIGHT: (C)2004,JPO&NCIPI

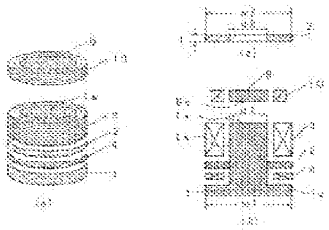

Last updated: 13.03.2013 Worldwide Database 5.8.6.8; 92p

(19)日本国特許庁(JP)　(12)公開特許公報(A)　(11)特許出願公開番号
特開2004-201458
(P2004-201458A)
(43)公開日　平成16年7月15日(2004.7.15)

(51)Int.Cl.[7]	F I		テーマコード（参考）
H02M 3/28	H02M 3/28	C	5H730
H01F 30/04	H02M 3/28	L	
H02M 3/338	H02M 3/28	V	
	H02M 3/338	A	
	H01F 31/04		

審査請求 有　請求項の数 5　OL　（全 7 頁）

(21)出願番号　特願2002-369380(P2002-369380)
(22)出願日　平成14年12月20日(2002.12.20)

(71)出願人　000003089
東光株式会社
東京都大田区東雪谷２丁目１番１７号
(72)発明者　小島　秀樹
埼玉県鶴ヶ島市大字五味ケ谷１８番地　東光株式会社埼玉事業所内

Fターム(参考)　5H730 AA14 AA17 AA20 BB43 BB52 CC04 DD02 DD23 EE02 EE07 EE73 FD24 FG08 XX03 XX15 XX47 ZZ16

(54)【発明の名称】マルチ出力電源装置のトランス

(57)【要約】
【課題】出力電圧電流特性に垂下特性をもたせ、過電流保護回路を不要としたマルチ出力電源装置のトランスを提供することを目的とする。
【解決手段】電力を供給する一次側コイルと電力を受電する二次側コイルを備え、一次側コイルと二次側コイルとを対向させて電力の伝達をおこなう非接触電源装置と、一次側コイルの巻線軸と同軸に設けた三次側コイルから複数の直流出力電圧を得る電源装置とを併せ持つマルチ出力電源装置のトランスにおいて、トランスは一次側コイル、二次側コイル、三次側コイルを具備している。一次側コイルと三次側コイルは同一のコア軸に巻線が巻回されている。二次側コイルは他のコア軸に巻線が巻回されている。そして、一次側コイルと三次側コイルとの間にコア材の仕切り板を設けた。
【選択図】　図１

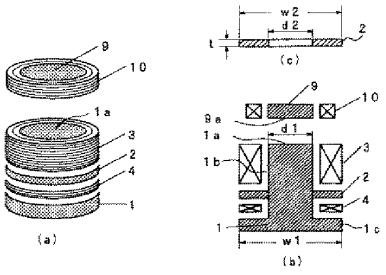

InductEV, Inc.
Exhibit 1031
Page 302

【特許請求の範囲】
【請求項1】
電力を供給する一次側コイルと電力を受電する二次側コイルを備え、該一次側コイルと該二次側コイルとを対向させて電力の伝達を行なう非接触電源装置と、該一次側コイルの巻線軸と同軸に設けた二次側コイルから複数の直流出力電圧を得る電源装置とを併せ持つマルチ出力電源装置のトランスにおいて、
該トランスは一次側コイル、二次側コイル、三次側コイルを具備してなり、
該一次側コイルと該三次側コイルは同一のコア軸に巻線が巻回され、該二次側コイルは他のコア軸に巻線が巻回され、
該一次側コイルと該三次側コイルとの間にコア材の仕切り板を設けたことを特徴とするマルチ出力電源装置のトランス。
【請求項2】
電力を供給する一次側コイルと電力を受電する二次側コイルを備え、該一次側コイルと該二次側コイルとを対向させて電力の伝達を行なう非接触電源装置と、該一次側コイルの巻線軸と同軸に設けた二次側コイルから複数の直流出力電圧を得る電源装置とを併せ持つマルチ出力電源装置のトランスにおいて、
該トランスは一次側コイル、二次側コイル、三次側コイルを具備してなり、
該一次側コイルと該三次側コイルは同一コア軸に並べて巻線が巻回され、
該二次側コイルは他のコア軸に巻線が巻回され、
該一次側コイルと該三次側コイルとの間にコア材の仕切り板を設けたことを特徴とするマルチ出力電源装置のトランス。
【請求項3】
電力を供給する一次側コイルと電力を受電する二次側コイルを備え、該一次側コイルと該二次側コイルとを対向させて電力の伝達を行なう非接触電源装置と、該一次側コイルの巻線軸と同軸に設けた二次側コイルから複数の直流出力電圧を得る電源装置とを併せ持つマルチ出力電源装置のトランスにおいて、
該トランスは一次側コイル、二次側コイル、三次側コイルを具備してなり、
該一次側コイルと該三次側コイルは同一コア軸に重ねて巻線が巻回され、該二次側コイルは他のコア軸に巻線が巻回され、該一次側コイルと該三次側コイルとの間にコア材の仕切り板を設けたことを特徴とするマルチ出力電源装置のトランス。
【請求項4】
前記一次側コイルと三次側コイルを巻回するコアは仕切り板を一体にして成型したことを特徴とする請求項１、請求項２、請求項３記載のマルチ出力電源装置のトランス。
【請求項5】
前記仕切り板は一次側コイルと三次側コイルの結合係数を一次側コイルと二次側コイルの結合係数とほぼ同じになるように所定の大きさとしたことを特徴とする請求項１、請求項２、請求項３、請求項４記載のマルチ出力電源装置のトランス。

【発明の詳細な説明】
【０００１】
【発明の属する技術分野】本発明は、非接触で電力を供給する電源装置と複数の直流出力電圧とを同時に得られるマルチ出力電源装置に用いるトランスに関する。
【０００２】
【従来の技術】
【特許文献１】特開平９－１２１４８１号公報
【特許文献２】特開平６－１６９５６６号公報
【０００３】
例えば、コードレス電話装置のように、子機はコードレスで親機から非接触で二次電池を充電する充電電池を備え、親機は子機に電力を供給する電源を備えるとともに、複数の回路に応じた直流電源を出力できるマルチ出力電源装置が用いられている。（例えば、特許文献１参照）

InductEV, Inc.
Exhibit 1031
Page 303

【０００４】
部品点数が少なく、回路構成が簡単な自励発振型のマルチ出力電源装置の概略回路図を図５に示す。
図５に示すように、電力を供給する一次側は商用交流電源（ＡＣ１００Ｖ　５０／６０Ｈｚ）から整流平滑回路を介して直流電圧を得る。その直流電圧を自励発振回路によりスイッチング素子をオンオフさせて、一次コイルＬ１に発生したエネルギーを、一次コイルＬ１と所定の間隔を隔てて対向させて配置した二次コイルＬ２に電力を供給し、非接触で出力端子ＣＮ２に所定の直流電圧を得る回路である。また、一次コイルＬ１のエネルギーを同じトランス内に設けられた三次コイルＬ３に伝え、出力端子ＣＮ３に所定の直流電圧を得る回路である。なお、回路図では、出力端子ＣＮ３は１出力であるが複数の出力を必要とする場合は三次コイルを複数設け、それぞれに応じた設定の直流電圧を得る。
【０００５】
このような構成のマルチ出力電源装置における従来のトランスを図６に示す。
図６に示すように、図６（ａ）は説明のための模式図であり、図２（ｂ）はその断面図である。
図６より、磁性材料から成る断面がＴ字状の一次側コア１に、巻線部１ｂに一次コイル３を巻回し、同じコア軸上に並べて、三次コイル４を巻回したものである。
二次コイルは磁性材料から成る断面がＩ字状の二次側コア９に二次コイル１０を巻回したものである。そして、一次側コア(一次コイルの巻線面を含む)面１ａと二次側コア(二次コイル巻線面を含む)面９ａが所定の間隔を置いて、対向した状態で二次コイル１０に電力を伝達する。
【０００６】
このようなトランスおける磁束の流れを図７に示す。
図７に示すとおり、一次コイル３で発生する磁束は一次側コアの面１ａから対向する二次側コア９、二次コイル２０を経て、一次側コアの鍔１ｃに入る磁束のループϕ_{1-2}と、一次側コア１から一次側コアの面１ａを飛び出し鍔１ｃに入る磁束のループϕ_{1-3}が考えられる。
これらは、一次コイル３と二次コイル４の結合係数k_{1-2}と一次コイルと三次コイルの結合係数k_{1-3}を測定することにより、一次コル、二次コイル、三次コイルの磁束の関係をあらわすことができる。
図６のトランスにおいて結合係数を測定した結果、一次コイルと二次コイルの結合係数K_{1-2}は０．２～０．４であり、一次コイルと三次コイルの結合係数K_{1-3}は０．５～０．８であった。
図５に示す回路図にこのトランスを用いた時、三次コイルの出力端子ＣＮ３の出力電圧電流特性は図４に示す曲線Ｂのようになった。
このような出力電圧電流特性では、外部負荷において短絡（ショート）した場合に過大な電流が流れ回路を焼損する恐れがある。これを防止するために保護回路を設けると回路が複雑となり大幅なコストアップとなる欠点があった。また、三次コイルに並列に共振コンデンサＣｏ（図５　点線部）を挿入する方法があるが、一次コイルと三次コイルの結合係数k_{1-3}が強くなりすぎて自励発振回路の発振が不安定となる。
【０００７】
【発明が解決しようとする課題】
本発明は以上のような従来の欠点に鑑み、三次コイルの出力電圧電流特性に垂下特性をもたせ、過電流保護回路を不要としたマルチ出力電源装置のトランスを提供することを目的としている。
【０００８】
【課題を解決するための手段】
上記目的を達成するために、本発明は、電力を供給する一次側コイルと電力を受電する二次側コイルを備え、一次側コイルと二次側コイルとを対向させて電力の伝達をおこなう非接触電源装置と、一次側コイルの巻線軸と同軸に設けた三次側コイルから複数の直流出力

InductEV, Inc.
Exhibit 1031
Page 304

電圧を得る電源装置とを併せ持つマルチ出力電源装置のトランスにおいて、トランスは一次側コイル、二次側コイル、三次側コイルを具備している。一次側コイルと三次側コイルは同一のコア軸に巻線が巻回されている。二次側コイルは他のコア軸に巻線が巻回されている。そして、一次側コイルと三次側コイルとの間にコア材の仕切り板を設けた構成である。

【０００９】

【発明の実施の形態】

電力を供給する一次側コイルと電力を受け取る二次側コイルを備え、一次側コイルと二次側コイルとを対向させて電力の伝達を行なう非接触電源装置と、一次側コイルの巻線軸と同軸に設けた三次側コイルから複数の直流出力電圧を得る電源装置とを併せ持つマルチ出力電源装置のトランスにおいて、トランスは一次側コイル、二次側コイル、三次側コイルを具備している。

一次側コイルと三次側コイルは同一のコア軸に並べて巻線を巻回したり、または、一次側コイルと三次側コイルを同一のコア軸に重ねて巻線を巻回する。二次側コイルは他のコア軸に巻線を巻回する。一次側コイルと三次側コイルとの間にコア材の仕切り板を設けて磁気的結合を調整する。

仕切り板は一次側コイルと三次側コイルの結合係数を一次側コイルと二次側コイルの結合係数とほぼ同じ結合係数となるように所定の大きさとする。

または、一次側コアには、仕切り板を設けた形状のコアを一体にして形成したものを用いると部品点数を削減すると共に作業が容易となる。

【００１０】

【実施例】

本発明のマルチ出力電源装置のトランスの実施例を図１から図４を用いて説明する。

【００１１】

図１は一次コイルと二次コイルを巻線軸に並べて、磁気的結合を垂直方向に結合させたトランスで、図１（ａ）は説明のための模式図であり、図１（ｂ）はその断面図であり、図１（ｃ）は仕切り板の断面図である。

図１に示すように、トランスにおいて、１は磁性材料で断面がＴ字状に成型された一次側コア、２は磁性材料でリング状に成型された平板状の仕切り板、３は一次コイル、４は三次コイル、９は磁性材料で断面がＩ字状に成型された二次側コア、１０は二次コイルである。

【００１２】

仕切り板は一次コイルと三次コイルの結合係数k_{1-3}が一次コイルと二次コイルの結合係数k_{1-2}とほぼ同じになるようにコアを所定の大きさに設定したもので、その大きさは内径ｄ２を一次側コア１の巻線部径ｄ１とほぼ同じとし、外径ｗ２を一次側コア１の外径ｗ１とほぼ同じ（やや小さめ）とし、厚みｔを設けたものである。

なお、本願実施において一次コイルと三次コイルの結合係数k_{1-3}を設定する際、仕切り板の外径ｗ２を変えると大きく結合が変わることより粗調整として予め行い、仕切り板の厚みｔで微調整行うことにより設定が容易に行なえる。なお、仕切り板の外径ｗ２を一次側コアの外形ｗ１より大きくすると、仕切り板２が出っ張ることになり、他の部品との接触およびトランスの配置に注意を要する。

また、一次側コアはコア１と仕切り板２を一体に形成したものでもよい。

【００１３】

このような構造のトランスの磁束の流れを図２に示す。

図２に示すように、一次コイル３で発生した磁束は一次側コア１から対向する二次側コア９、二次コイル１０を経て、一次コイル３と三次コイル４間に設けた仕切り板２を通るループϕ_{1-2}を描く。また、一次コイルで発生した磁束ϕ１は二次側コア面９ａと対向する一次側コアの面１ａから飛び出し、仕切り板２に入る磁束のループと三次コイル４を通り一次側コアの鍔１ｃに入る磁束ϕ_{1-3}とが考えられる。

【００１４】

InductEV, Inc.
Exhibit 1031
Page 305

このように、磁性体の仕切り板２を設けることにより、一次コイル３で発生した磁束の一部は仕切り板２を通るループと三次コイル４を通るループϕ_{1-3}に分かれる。いいかえれば、仕切り板の大きさ（ｗ２、ｔ）によって三次コイル４を通るループϕ_{1-3}の磁束を調整することができる。

【００１５】

図５の回路において、三次コイルと並列に共振コンデンサＣｏ（点線部）を接続した共振型のマルチ出力電源装置に本願発明のトランスを用いて、三次コイルの出力端子ＣＮ３の出力電圧電流特性を測定した結果、図４の曲線Ａで示す特性を得た。

図４の曲線Ａに示すように垂下特性をもたせることができる。

このときの実施例である本願発明のトランスの各結合係数は、一次コイルと二次コイルの結合係数k_{1-2}は０．２５～０．３５で、一次コイル三次コイルの結合係数k_{1-3}は０．２～０．３であった。

【００１６】

このように、本発明のマルチ出力電源装置のトランスを用いることにより、

三次コイルの出力回路に保護回路が不要となり、コスト低減となる。また、三次コイルの出力端子ＣＮ３が電力制限されるため、無負荷時の２次側出力電圧が跳ね上がらず安全である。

【００１７】

次に、他の実施例であるマルチ出力電源装置のトランスを図３に示す。

図３は、一次コイルに二次コイルを重ねて巻回して高さを低く抑えた、磁気結合を水平方向に結合させたトランスで、図３（ａ）は説明のための模式図であり、図３（ｂ）はその断面図であり、図３（ｃ）は仕切り板の断面図である。

図３に示すように、トランスにおいて、１は磁性材料で断面がＥ字状に成型されたポット形の一次側コア、２は磁性材料で成型された筒状の仕切り板、３は一次コイル、４は三次コイル、９は磁性材料で断面がＩ字状に成型された二次側コア、１０は二次コイルである。

仕切り板２は一次コイルと三次コイルの結合係数K_{1-3}が一次コイルと二次コイルの結合係数k_{1-2}より小さくなるように高さｈ２をコア１の脚１ｃと同じ高さｈ１寸法とし、厚みｔを所定の厚みに設定する。

なお、一次側コア１は仕切り板２を一体にして形成したものでもよい。

【００１８】

以上、本発明のマルチ出力電源装置のトランスの実施例を述べたが、これらの実施例に限られるものではない。例えば、コア形状を円筒で示したが、楕円、四角形、多角形を用いてもよい。一次コイル、二次コイル、三次コイルは予め巻線された空心コイルを用いてもよい。さらに、一次側コアと仕切り板の透磁率を異ならせた磁性材料を用いてもよい。さらに、自励型の共振回路を用いて説明したが他励の共振回路を用いても同様である。

【００１９】

【発明の効果】

以上の説明から明らかなように、本発明のマルチ出力電源装置のトランスは、一次コイルと三次コイルを同一のコア軸に巻線が巻回されており、一次コイルと三次コイルとの間に仕切り板を設け、一次コイルと三次コイルの結合を一次コイルと二次コイルの結合をほぼ同じにすることにより、三次コイルの出力端子の出力電圧電流特性に垂下特性を持たせている。それによって過電流を回避するため、複雑な過電流保護回路を必要としない安価なマルチ出力電源装置を提供することができる。

【図面の簡単な説明】

【図１】本発明の一実施例であるマルチ出力電源装置のトランスの模式図（ａ）とその断面図（ｂ）と仕切り板の断面図（ｃ）

【図２】図１に示したトランスの磁束の流れ図

【図３】本発明の他の実施例であるマルチ出力電源装置のトランスの模式図（ａ）とその断面図（ｂ）と仕切り板の断面図（ｃ）

InductEV, Inc.
Exhibit 1031
Page 306

【図４】三次側の出力端子の出力電圧電流特性図
【図５】マルチ出力電源装置の概略回路図
【図６】従来のマルチ出力電源装置のトランスの模式図(ａ)とその断面図（ｂ）
【図７】図６に示したトランスの磁束の流れ図
【符号の説明】
１　一次側コア
２　仕切り板
３　一次コイル
４　三次コイル
９　二次側コア
１０　二次コイル

【図1】

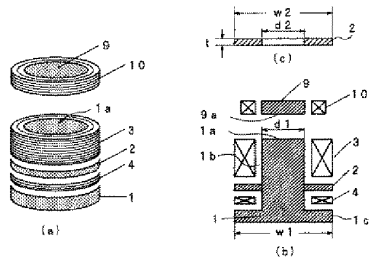

【図2】

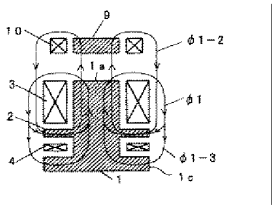

【図3】

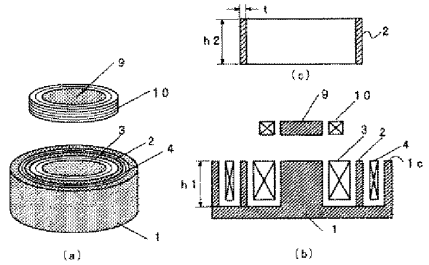

【図4】

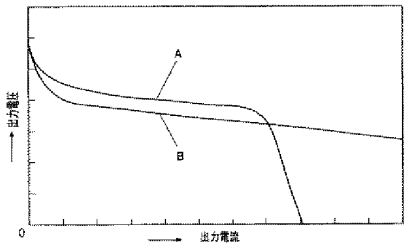

InductEV, Inc.
Exhibit 1031
Page 307

【図5】

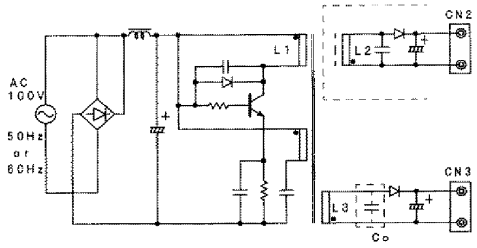

【図6】

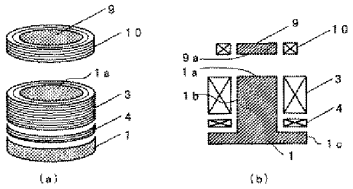

【図7】

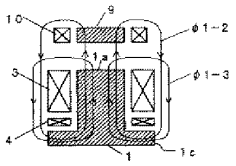

InductEV, Inc.
Exhibit 1031
Page 308

Patent Record Full View Thursday, May 2 2013 THOMSON INNOVATION

Patent/Publication: JP2004201458A

Bibliography

DWPI Title

Transformer used in multioutput power supply, has primary and tertiary coils separated by partition plate, wound on same core, and secondary coil wound on separate core

Original Title

TRANSFORMER FOR MULTIPLE-OUTPUT POWER SUPPLY

The trans|transformer of a multi output power supply *(Translation from Thomson Reuters)*

English Title

TRANSFORMER FOR MULTIPLE-OUTPUT POWER SUPPLY

Assignee/Applicant

Standardized: **TOKO INC**

Original: TOKO INC

DWPI Assignee/Applicant

TOKO KK (TOJK-C)

Inventor

KOJIMA HIDEKI,

DWPI Inventor

KOJIMA H

Publication Date (Kind Code)

2004-07-15 (A)

DWPI Accession / Update

2004-514382 / 200449

Application Number / Date

JP2002369380A / 2002-12-20

Priority Number / Date / Country

JP2002369380A / 2002-12-20 / JP

Abstract

DWPI Abstract

(JP2004201458A_)

Novelty

A secondary coil (10) receives power from a primary coil (3), such that direct current (DC) voltages are output by the secondary coil. The primary coil and a tertiary coil (4) separated by a partition plate (2), are wound in the same core, and the secondary coil is wound on a separate core (9).

Use

In multioutput power supply.

Advantage

Enables to provide a dropping characteristics to the voltage-current characteristic curve of the tertiary coil, by separating the tertiary coil and the primary coil using the partition plate. By preventing over current generation, the need for providing an expensive protective circuit is eliminated.

Drawing Description

The figure shows the perspective and sectional views of the transformer and the partition plate.

1 - primary side core.

2 - partition plate.

3 - primary coil.

4 - tertiary coil.

9 - secondary side core.

10 - secondary coil.

Abstract

PROBLEM TO BE SOLVED: To provide a transformer for multiple-output power supply wherein the output voltage/current characteristics are provided with a drooping characteristic and necessity for an overcurrent protection circuit is obviated.

SOLUTION: The transformer is for a multiple-output power supply. The transformer comprises a non-contact power supply which is provided with a primary coil for supplying power and a secondary coil for receiving power and transmits power with the primary coil, and the secondary coil opposed to each other; and a power supply which obtains a plurality of direct-current output voltages from a tertiary coil provided coaxially with the winding axis of the primary coil. The transformer comprises the primary coil, secondary coil, and tertiary coil. The windings of the primary coil and the tertiary coil are wound on the same core shaft. The winding of the secondary coil is wound on another core shaft. A partition plate made of the core material is provided between the primary coil and the tertiary coil.

COPYRIGHT: (C)2004, JPO&Japio

SUBJECT of the Invention A drooping characteristic is given to an output-voltage electric-current characteristic,

InductEV, Inc.
Exhibit 1031
Page 311

It aims at providing the trans|transformer of the multi output power supply which made the overcurrent protective circuit unnecessary.

PROBLEM to be solved The trans|transformer of the multi output power supply having the non-contact power supply which have the primary side coil which supplies electric power, and the secondary side coil which receives electric power, and a primary side coil and a secondary side coil are made to oppose, and transmits electric power, and the power supply which obtains some direct current|flow output voltages from the third order side coil provided coaxial as the coil|winding axis|shaft of a primary side coil

WHEREIN:

The trans|transformer has comprised the primary side coil, the secondary side coil, and the third order side coil.

The coil|winding is wound by the core axis|shaft with same primary side coil and third order side coil.

As for the secondary side coil, the coil|winding is wound by another core axis|shaft.

And the partition plate of a core material was provided between the primary side coil and the third order side coil.

SELECTED DRAWINGS FIG. 1

[MAT_IMAGE 000002]

(Translation from Thomson Reuters)

Classes/Indexing

IPC

IPC Code(1-7) **H02M 3/28** H01F 30/04 H02M 3/338

(7)

Current IPC	Invention	Version	Additional	Version
Full	H01F 30/04 H02M 3/28 H02M 3/338	20060101 20060101 20060101	-	-
Main Group	-	-	-	-
Subclass	-	-	-	-

Original IPC	Invention	Version	Additional	Version
Advanced/Full	H01F 30/04 H02M 3/28 H02M 3/338	20060101 20060101 20060101	-	-
Core/Main Group	H01F 30/00 H02M 3/24	20060101 20060101	-	-
Subclass	-	-	-	-

JP FI Codes

H01F 31/04 ; H02M 3/28 C; H02M 3/28 L; H02M 3/28 V; H02M 3/338 A

JP F Terms

5E068

InductEV, Inc.
Exhibit 1031
Page 312

5H730: AA14; AA17; AA20; BB43; BB52; CC04; DD02; DD23; EE02; EE07; EE73; FD24; FG08; XX03; XX15; XX47; ZZ16

DWPI Class

U24 V02 X12

DWPI Manual Codes

Expand DWPI Manual Codes

Legal Status

INPADOC Legal Status

Gazette Date	Code	Description
2012-02-07	FPAY +	RENEWAL FEE PAYMENT PAYMENT UNTIL: 20140204
2012-02-02	FPAY +	RENEWAL FEE PAYMENT PAYMENT UNTIL: 20120204
2010-02-02	FPAY +	RENEWAL FEE PAYMENT PAYMENT UNTIL: 20120204
2010-01-28	FPAY +	RENEWAL FEE PAYMENT PAYMENT UNTIL: 20100204

Get Family Legal Status

Family

Family

INPADOC Family (2)

	Publication Number	Publication Date	Inventor	Assignee/Applicant	Title
	JP2004201458A	2004-07-15	KOJIMA HIDEKI	TOKO INC	TRANSFORMER FOR MULTIPLE-OUTPUT POWER SUPPLY
	JP03643581B2	2005-04-27	-	-	-

DWPI Family (2); Countries (1)

Publication	DWPI Update	Publication Date	IPC Code	Language
JP2004201458A	200449	2004-07-15	H02M000328	Japanese
Local Applications: JP2002369380A filed 2002-12-20				
JP03643581B2	200528	2005-04-27	H02M000328	Japanese
Local Applications: JP2002369380A filed 2002-12-20				

Claims

Claims

All Claims (5)

InductEV, Inc.
Exhibit 1031
Page 313

Claims (English)

1. The trans|transformer of the multi output power supply having the non-contact power supply which have the primary side coil which supplies electric power, and the secondary side coil which receives electric power, and this primary side coil and this secondary side coil are made to oppose, and transmits electric power, and the power supply which obtains some direct current|flow output voltages from the secondary side coil provided coaxial as the coil|winding axis|shaft of this primary side coil
WHEREIN:
This trans|transformer comprises a primary side coil, a secondary side coil, and an third order side coil,
A coil|winding is wound by the core axis|shaft with same this primary side coil and this third order side coil,
As for this secondary side coil, a coil|winding is wound by another core axis|shaft,
The partition plate of a core material was provided between this primary side coil and this third order side coil.
The trans|transformer of the multi output power supply characterized by the above-mentioned.

2. The trans|transformer of the multi output power supply having the non-contact power supply which have the primary side coil which supplies electric power, and the secondary side coil which receives electric power, and this primary side coil and this secondary side coil are made to oppose, and transmits electric power, and the power supply which obtains some direct current|flow output voltages from the secondary side coil provided coaxial as the coil|winding axis|shaft of this primary side coil
WHEREIN:
This trans|transformer comprises a primary side coil, a secondary side coil, and an third order side coil,
This primary side coil and this third order side coil are arranged in the same core axis|shaft, and a coil|winding is wound,
As for this secondary side coil, a coil|winding is wound by another core axis|shaft,
The partition plate of a core material was provided between this primary side coil and this third order side coil.
The trans|transformer of the multi output power supply characterized by the above-mentioned.

3. The trans|transformer of the multi output power supply having the non-contact power supply which have the primary side coil which supplies electric power, and the secondary side coil which receives electric power, and this primary side coil and this secondary side coil are made to oppose, and transmits electric power, and the power supply which obtains some direct current|flow output voltages from the secondary side coil provided coaxial as the coil|winding axis|shaft of this primary side coil
WHEREIN:
This trans|transformer comprises a primary side coil, a secondary side coil, and an third order side coil,
As for this primary side coil and this third order side coil, a coil|winding is wound in piles by the same core axis|shaft,
As for this secondary side coil, a coil|winding is wound by another core axis|shaft,
The partition plate of a core material was provided between this primary side coil and this third order side coil.
The trans|transformer of the multi output power supply characterized by the above-mentioned.

4. The core which winds said primary side coil and an third order side coil made the partition plate integral, and shape|molded it.
The trans|transformer of the multi output power supply of Claim 1, 2, 3 characterized by the above-mentioned.

5. Said partition plate made the predetermined size the coupling coefficient of a primary side coil and an third order side coil so that it might become substantially the same as the coupling coefficient of a primary side coil and a secondary side coil.
The trans|transformer of the multi output power supply of Claim 1, 2, 3, 4 characterized by the above-mentioned.

(Translation from Thomson Reuters)

InductEV, Inc.
Exhibit 1031
Page 314

Description

DWPI Drawing Description

The figure shows the perspective and sectional views of the transformer and the partition plate.

1 - primary side core.

2 - partition plate.

3 - primary coil.

4 - tertiary coil.

9 - secondary side core.

10 - secondary coil.

Drawing Description

Drawing Description

-

Description

Description

TECHNICAL FIELD of the Invention

This invention is non-contact and relates the power supply which supplies electric power, and some direct current|flow output voltages to the trans|transformer used for the multi output power supply which can be obtained simultaneously.

PRIOR ART

For example, like a cordless-telephone apparatus, a sub-station|mobile_unit is cordless, and it is non-contact from a main|base_station, and has the charging battery which charges a secondary battery, and while a main|base_station is equipped with the power supply which supplies electric power to a sub-station|mobile_unit, the multi output power supply which can output the DC power according to some circuits is used.
(For example, patent-documents 1 reference)

There are few number of parts and a circuit structure shows the outline circuit diagram of the multi output power supply of a simple self-excitation oscillation type|mold in FIG. 5.
As shown in FIG. 5, the primary side which supplies electric power obtains a DC voltage from a mains AC power supply (AC100V 50 / 60Hz) via a rectification smoothing circuit.
A switching element is turned on-off for the DC voltage by a self-excitation oscillation circuit,
Electric power is supplied to the secondary coil L2 which the energy generate|occur|produced in the primary coil L1 was made to oppose at predetermined intervals with a primary coil L1, and arranged it,
It is non-contact and is the circuit which obtains a predetermined DC voltage to an output terminal CN2.
Moreover, it is the circuit which imparts the energy of a primary coil L1 to the tertiary coil L3 provided in the same trans|transformer, and obtains a predetermined DC voltage to an output terminal CN3.
In addition, with a circuit diagram, although it is one output, in a required case, some output are provided plurality of a tertiary coil, and an output terminal CN3 obtains the DC voltage of a setting according to each.

InductEV, Inc.
Exhibit 1031
Page 315

The conventional trans|transformer in the multi output power supply of such a structure is shown in FIG. 6.
As shown in FIG. 6, FIG.6(a) is the model for description,
FIG.2(b) is the sectional drawing.
From FIG. 6, the cross-section which consists of a magnetic material winds a primary coil 3 to the T-shaped primary side core 1 at coil|winding part 1b,
It arranges on the same core axis|shaft and a tertiary coil 4 is wound.
A secondary coil winds a secondary coil 10 to the secondary side core 9 whose cross-section which consists of a magnetic material is I character-like.
And primary side core (coil|winding surface of primary coil is contained) surface 1a and secondary side core (secondary-coil coil|winding surface is contained) surface 9a -- with a given interval
Electric power is transmitted to a secondary coil 10 in the state where it opposed.

The flow of the magnetic flux in such a trans|transformer is shown in FIG. 7.
The magnetic flux generate|occur|produced in a primary coil 3 can consider loop $(phi)_{1-2}$ of the magnetic flux which put|enters in collar 1c of a primary side core, and loop $(phi)_{1-3}$ of the magnetic flux which put|enters surface 1a of the primary side core 1 to a primary side core in jump-out|protrusion collar 1c passing through the secondary side core 9 which opposes from surface 1a of a primary side core, and a secondary coil 20 as shown in FIG. 7.
These can express the relationship of the magnetic flux of a primary col, a secondary coil, and a tertiary coil by measuring coupling-coefficient k_{1-3} of coupling-coefficient k_{1-2} of a primary coil 3 and a secondary coil 4, a primary coil, and a tertiary coil.
Coupling-coefficient K_{1-2} of the result and primary coil which measured the coupling coefficient in the trans|transformer of FIG. 6, and a secondary coil is 0.2-0.4,
Coupling-coefficient K_{1-3} of a primary coil and a tertiary coil was 0.5-0.8.
When this trans|transformer was used for the circuit diagram shown in FIG. 5, the output-voltage electric-current characteristic of the output terminal CN3 of a tertiary coil became like the curve B shown in FIG. 4.
In such an output-voltage electric-current characteristic, when it short-circuits in an external load (short), there exists a possibility of an excessive electric current flowing and burning a circuit.
In order to prevent this, when the protective circuit was provided, there existed a fault which a circuit becomes complicated and serves as a large cost increase.
Moreover, there exists the method of inserting the resonance capacitor|condenser Co (FIG. 5 point line part) in a tertiary coil in parallel,
However, coupling-coefficient k_{1-3} of a primary coil and a tertiary coil becomes too strong, and it becomes unstable oscillating [of a self-excitation oscillation circuit] it.

PROBLEM to be solved by the Invention

This invention gives a drooping characteristic to the output-voltage electric-current characteristic of a tertiary coil in view of the above conventional faults,
It aims at providing the trans|transformer of the multi output power supply which made the overcurrent protective circuit unnecessary.

MEANS to solve the Problem

It is the trans|transformer of the multi output power supply having the non-contact power supply which this invention is equipped with the primary side coil which supplies electric power, and the secondary side coil which receives electric power, and a primary side coil and a secondary side coil are made to oppose in order to achieve said objective, and transmits electric power, and the power supply which obtains some direct current|flow output voltages from the third order side coil provided coaxial as the coil|winding axis|shaft of a primary side coil.
WHEREIN:
The trans|transformer has comprised the primary side coil, the secondary side coil, and the third order side coil.
The coil|winding is wound by the core axis|shaft with same primary side coil and third order side coil.

InductEV, Inc.
Exhibit 1031
Page 316

As for the secondary side coil, the coil|winding is wound by another core axis|shaft.
And it is the structure which provided the partition plate of a core material between the primary side coil and the third order side coil.

EMBODIMENT of the Invention

The trans|transformer of the multi output power supply having the non-contact power supply which have the secondary side coil which receives the primary side coil which supplies electric power, and electric power, and a primary side coil and a secondary side coil are made to oppose, and transmits electric power, and the power supply which obtains some direct current|flow output voltages from the third order side coil provided coaxial as the coil|winding axis|shaft of a primary side coil
WHEREIN:
The trans|transformer has comprised the primary side coil, the secondary side coil, and the third order side coil.
A primary side coil and an third order side coil are arranged in the same core axis|shaft, and a coil|winding is wound,
Or a coil|winding is wound for a primary side coil and an third order side coil in piles on the same core axis|shaft.
A secondary side coil winds a coil|winding on another core axis|shaft.
The partition plate of a core material is provided between a primary side coil and an third order side coil, and magnetic binding|bond|coupling is adjusted to it.
A partition plate makes a predetermined size the coupling coefficient of a primary side coil and an third order side coil so that it may become the coupling coefficient of a primary side coil and a secondary side coil, and a substantially the same coupling coefficient.
Or operation becomes easy while reducing a number of parts, when what made integral the core of the shape which provided the partition plate, and formed it at the primary side core is used.

EXAMPLES

The Example of the trans|transformer of the multi output power supply of this invention is demonstrated using FIGS. 1-4.

It is the trans|transformer which FIG. 1 arranged [trans|transformer] the primary coil and the secondary coil in the coil|winding axis|shaft, and combined magnetic binding|bond|coupling with the orthogonal|vertical direction, and FIG.1(a) is the model for description,
FIG.1(b) is the sectional drawing,
FIG.1(c) is sectional drawing of a partition plate.
As shown in FIG. 1, it is a trans|transformer.
WHEREIN:
1 is the primary side core by which the cross-section was shape|molded T-shaped with the magnetic material,
2 is the flat partition plate shape|molded in a ring shape with the magnetic material,
3 is a primary coil,
4 is a tertiary coil,
9 is the secondary side core by which the cross-section was shape|molded in the shape of I character with the magnetic material,
10 is a secondary coil.

A partition plate is what set the core in the predetermined size so that coupling-coefficient k_{1-3} of a primary coil and a tertiary coil may become substantially the same as coupling-coefficient k_{1-2} of a primary coil and a secondary coil, and the size makes an internal diameter d2 substantially the same as the diameter d1 of a volume line part of the primary side core 1,
An outer diameter w2 -- the outer diameter w1 of the primary side core 1 -- being substantially the same (it being slightly smallish) -- carrying out
Thickness t is provided.
In addition, when setting coupling-coefficient k_{1-3} of a primary coil and a tertiary coil in this-application implementation, and the outer diameter w2 of a partition plate is changed, it will carry out beforehand

InductEV, Inc.
Exhibit 1031
Page 317

as a coarse control from binding|bond|coupling changing a lot,
Thickness t of a partition plate -- fine-adjustment 行う -- it can set easily by things.
In addition, when the outer diameter w2 of a partition plate is enlarged from the external shape w1 of a primary side core, a partition plate 2 will protrude,
The arrangement of a contact and a trans|transformer with another component requires a caution.
Moreover, what integrally formed core 1 and the partition plate 2 is sufficient as a primary side core.

The flow of the magnetic flux of the trans|transformer of such structure is shown in FIG. 2.
As shown in FIG. 2, the magnetic flux generate|occur|produced in the primary coil 3 draws loop $(phi)_{1-2}$ which passes along the partition plate 2 provided between the primary coil 3 and the tertiary coil 4 passing through the secondary side core 9 which opposes from the primary side core 1, and a secondary coil 10.
Moreover, the magnetic flux (phi) 1 generate|occur|produced in the primary coil protrudes|jumps out from surface 1a of the primary side core opposing secondary side core surface 9a,
Magnetic flux $(phi)_{1-3}$ which put|enters in collar 1c of a primary side core through the loop and tertiary coil 4 of magnetic flux which put|enter in a partition plate 2 can be considered.

Thus, one part of the magnetic flux generate|occur|produced in the primary coil 3 is divided into loop $(phi)_{1-3}$ which passes along the loop which passes along a partition plate 2, and a tertiary coil 4 by providing the partition plate 2 of a magnetic substance.
In other words, the magnetic flux of loop $(phi)_{1-3}$ which passes along a tertiary coil 4 with the size (w2, t) of a partition plate can be adjusted.

The circuit of FIG. 5
WHEREIN:
The trans|transformer of this invention is used for the multi output power supply of the resonance type|mold which connected the resonance capacitor|condenser Co (point line part) to the tertiary coil and the parallel,
The result which measured the output-voltage electric-current characteristic of the output terminal CN3 of a tertiary coil, and the characteristic shown with the curve A of FIG. 4 were acquired.
A drooping characteristic can be given as shown in the curve A of FIG. 4.
Coupling-coefficient k_{1-2} of a primary coil and a secondary coil of each coupling coefficient of the trans|transformer of this invention which is an Example at this time was 0.25-0.35, and coupling-coefficient k_{1-3} of a primary-coil tertiary coil was 0.2-0.3.

Thus, the thing for which the trans|transformer of the multi output power supply of this invention is used,
A protective circuit becomes unnecessary in the output circuit of a tertiary coil,
It becomes a cost reduction.
Moreover, since the power restrictions of the output terminal CN3 of a tertiary coil are carried out, the secondary-side output voltage at the time of a no load leaps up and is safe.

Next, the trans|transformer of the multi output power supply which is another Example is shown in FIG. 3.
FIG. 3 is the trans|transformer which wound the secondary coil in piles to the primary coil, and restrained height low and which combined magnetic coupling with the horizontal direction, and FIG.3(a) is the model for description,
FIG.3(b) is the sectional drawing,
FIG.3(c) is sectional drawing of a partition plate.
As shown in FIG. 3, it is a trans|transformer.
WHEREIN:
1 is the primary side core of the pot type by which the cross-section was shape|molded by the E-shape with the magnetic material,
2 is the cylindrical partition plate shape|molded with the magnetic material,
3 is a primary coil,
4 is a tertiary coil,

InductEV, Inc.
Exhibit 1031
Page 318

9 is the secondary side core by which the cross-section was shape|molded in the shape of I character with the magnetic material,
10 is a secondary coil.
A partition plate 2 makes height h2 the height h1 same dimension as leg 1c of core 1 so that coupling-coefficient K_{1-3} of a primary coil and a tertiary coil may become smaller from coupling-coefficient k_{1-2} of a primary coil and a secondary coil,
Thickness t is set in predetermined thickness.
In addition, what made the partition plate 2 integral and formed it is sufficient as the primary side core 1.

In the above, the Example of the trans|transformer of the multi output power supply of this invention was described,
However, it is not restricted to these Examples.
For example, it was cylindrical and the core shape was shown,
However, it may use an ellipse, a square, and a polygon.
A primary coil, a secondary coil, and a tertiary coil may use the air core coil wound beforehand.
Furthermore, it may use the magnetic material which varied the permeability of a primary side core and a partition plate.
Furthermore, it is the same even if it uses the resonance circuit of a separate excitation, although demonstrated using the resonance circuit of a self-excitation type|mold.

ADVANTAGE of the Invention

As for the trans|transformer of the multi output power supply of this invention, the coil|winding is clearly wound by the same core axis|shaft in the primary coil and the tertiary coil from the above description,
The drooping characteristic is given to the output-voltage electric-current characteristic of the output terminal of a tertiary coil by providing a partition plate between a primary coil and a tertiary coil, and making binding|bond|coupling of a primary coil and a secondary coil substantially the same for binding|bond|coupling of a primary coil and a tertiary coil.
Since an overcurrent is avoided by it, the cheap multi output power supply with which a complicated overcurrent protective circuit is not required can be provided.

BRIEF DESCRIPTION OF THE DRAWINGS

[FIG. 1]
Sectional-drawing (c) of model (a) and sectional-drawing (b) of the trans|transformer of the multi output power supply which is one Example of this invention, and a partition plate
[FIG. 2]
The flowchart of the magnetic flux of the trans|transformer shown in FIG. 1
[FIG. 3]
Sectional-drawing (c) of model (a) and sectional-drawing (b) of the trans|transformer of the multi output power supply which is another Example of this invention, and a partition plate
[FIG. 4]
The output-voltage electric-current characteristic view of the output terminal of the third order side
[FIG. 5]
The outline circuit diagram of a multi output power supply
[FIG. 6]
Conventional model (a) and its conventional sectional-drawing (b) of a trans|transformer of a multi output power supply
[FIG. 7]
The flowchart of the magnetic flux of the trans|transformer shown in FIG. 6

Description of Symbols

1 Primary side core
2 Partition plate
3 Primary coil

InductEV, Inc.
Exhibit 1031
Page 319

4 Tertiary coil
9 Secondary side core
10 Secondary coil
[FIG. 1]
[MAT_IMAGE 000003]
[FIG. 2]
[MAT_IMAGE 000004]
[FIG. 3]
[MAT_IMAGE 000005]
[FIG. 4]
[MAT_IMAGE 000006]
[FIG. 5]
[MAT_IMAGE 000007]
[FIG. 6]
[MAT_IMAGE 000008]
[FIG. 7]
[MAT_IMAGE 000009]

(Translation from Thomson Reuters)

Citations

Citation *Record level*

Citing Patents (0)

Expand Cited Patents (4)

Cited Non-patents (0)

Other

DWPI Title Terms

TRANSFORMER POWER SUPPLY PRIMARY TERTIARY COIL SEPARATE PARTITION PLATE WOUND CORE SECONDARY

DWPI Related Accession Numbers

-

Custom Fields

Test

-

Relevance

-

Product Name

InductEV, Inc.
Exhibit 1031
Page 320

-

Docket number

-

Notes

-

Copyright 2007-2013 THOMSON REUTERS

No documents available for this priority number.

Espacenet

Bibliographic data: JP2005057444 (A) — 2005-03-03

SMALL-SIZED HIGH-SENSITIVITY ANTENNA

Inventor(s): YOSHIDA MITSUNOBU; TAJIMA TAKUO; WATANABE HIROSHI; MARUKO NOBUHIRO ± (YOSHIDA MITSUNOBU, ; TAJIMA TAKUO, ; WATANABE HIROSHI, ; MARUKO NOBUHIRO)

Applicant(s): MITSUI CHEMICALS INC ± (MITSUI CHEMICALS INC)

Classification: - international: ***H01Q7/08;*** (IPC1-7): H01Q7/08
- cooperative:

Application number: JP20030285350 20030801

Priority number(s): JP20030285350 20030801

Also published as: JP3874744 (B2)

Abstract of JP2005057444 (A)

PROBLEM TO BE SOLVED: To improve transmission/reception sensitivity of an antenna core by improving an L value and a Q value without varying the length of an antenna or to make the antenna thinner and more small-sized without varying the sensitivity. ; SOLUTION: The antenna having its core material wound with a conductive wire material coated with an insulator is provided with a gate at an end of an area where the conductive wire material is wound. The gate is formed of a composite material made of a composition consisting of 5 to 60 vol.% metal magnetic powder and resin and a flat nano-crystal magnetic metal material is preferably used as the metal magnetic powder. ; COPYRIGHT: (C)2005,JPO&NCIPI

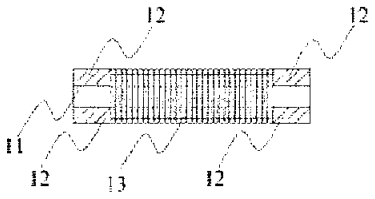

Last updated: 13.03.2013
Worldwide Database 5.8.6.6; 92p

InductEV, Inc.
Exhibit 1031
Page 322

(19)日本国特許庁(JP)　(12)公開特許公報(A)　(11)特許出願公開番号
特開2005-57444
(P2005-57444A)
(43)公開日　平成17年3月3日(2005.3.3)

(51)Int.Cl.[7]	F I	テーマコード（参考）
H01Q 7/08	H01Q 7/08	

審査請求 未請求　請求項の数 6　OL　（全 12 頁）

(21)出願番号　特願2003-285350(P2003-285350)
(22)出願日　平成15年8月1日(2003.8.1)

(71)出願人　000005887
三井化学株式会社
東京都港区東新橋一丁目５番２号
(72)発明者　吉田　光伸
千葉県袖ヶ浦市長浦５８０－３２　三井化学株式会社
(72)発明者　田島　卓雄
千葉県袖ヶ浦市長浦５８０－３２　三井化学株式会社
(72)発明者　渡辺　洋
千葉県袖ヶ浦市長浦５８０－３２　三井化学株式会社
(72)発明者　丸子　展弘
千葉県袖ヶ浦市長浦５８０－３２　三井化学株式会社

(54)【発明の名称】小型高感度アンテナ

(57)【要約】
【課題】 アンテナの長さ寸法を変えずに、Ｌ値、Ｑ値を向上させ、アンテナコアの送受信感度の向上を実現すること、或いは感度を変えずに更なる薄型化、小型化を実現する
【解決手段】 芯材に絶縁体で被覆された導電性線材が巻回されているアンテナにおいて、該導電性線材が巻回されている領域の端部に堰が設けられていることを特徴とするアンテナを用いる。堰は、金属磁性粉末５～６０Ｖｏｌ％と樹脂とからなる組成物により形成されている複合体から成り、前記金属磁性粉末は、扁平上のナノ結晶磁性金属材料を用いることが好ましい。
【選択図】図１

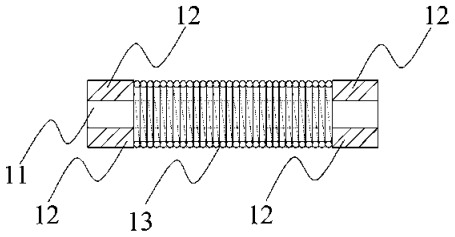

【特許請求の範囲】
【請求項１】
芯材に絶縁体で被覆された導電性線材が巻回されているアンテナにおいて、該導電性線材が巻回されている領域の端部に堰が設けられていることを特徴とするアンテナ。
【請求項２】
前記堰が、金属磁性粉末を含む組成物から成ることを特徴とする前記請求項１記載のアンテナ。
【請求項３】
前記堰が、金属磁性粉末と樹脂とからなる組成物を含む複合体から成ることを特徴とする前記請求項１記載のアンテナ。
【請求項４】
前記金属磁性粉末が、ナノ結晶磁性金属材料であることを特徴とする請求項１～３記載のアンテナ。
【請求項５】
前記金属磁性粉末の形状が偏平状であることを特徴とする前記請求項１～４記載のアンテナ。
【請求項６】
金属磁性粉末５～６０Ｖｏｌ％と樹脂９５～４０Ｖｏｌ％とからなる組成物を含む前記請求項３の複合体を製造するための組成物。
【発明の詳細な説明】
【技術分野】
【０００１】
本発明は、電波を電気信号に変換するアンテナ素子のうち、棒状アンテナに関するものである。例えば、電波を受信、送信、送受信するアンテナであり、ＲＦＩＤ 用アンテナ、車載イモビライザー用アンテナ、電子キー用アンテナ、電波時計用アンテナ、ラジオ、携帯機器用小型アンテナ等が挙げられる。 これらの棒状アンテナの感度をさらに向上させるために、棒状アンテナの片側もしくは両端に付加する金属磁性粉末ブロック体及び金属磁性粉末ブロックを付与したアンテナに関するものである。
【背景技術】
【０００２】
電子・通信分野の目覚しい発展に伴い，電気・電子機器に用いられる磁気応用製品の需要の拡大，これに伴う製品形態の多様化が急速に進んでおり、特に携帯機器の普及に伴って、薄型化、小型化、高効率化の要求が高まっている。これらの機器に用いられる、電波を電気信号に変換するアンテナ素子はより薄型化、小型化、高効率化が望まれている。
【０００３】
従来このようなアンテナとして特開平７－２７８７６３（特許文献１）では、図３に示すように、磁気特性が特に優れる非晶質金属薄帯材料を棒状のアンテナコア材料として用い、棒状コアに巻線を施すことで、１００ｋＨｚ以上でＱ値が高く高感度な、アンテナが提案されている。また、この技術の改善策として、特開２００１－３３７１８１（特許文献２）の方法が提案されている。この方法によれば、アンテナの棒状心材の両端にフランジが形成され、そのフランジの間にコイルが巻回されている。このフランジを付加することにより、アンテナの受信感度を向上させることが可能となる。しかし、機器の小型化に伴いさらなる薄型化、小型化、高性能アンテナが要望されている。
【特許文献１】特開平７－２７８７６３
【特許文献２】特開２００２－２７８７６３
【発明の開示】
【発明が解決しようとする課題】
【０００４】
近年の電波を利用した情報通信が、例えば防犯用の施錠システム、ＩＤカード、タグ等のトランスポンダに使用されるＲＦＩＤの情報の送受信、または、電波時計、ラジオ等に

用いられている。これらの用途では、携帯するタグ、キー等に使われることから、さらなる薄型化、カード化の市場要求がある。こうした用途のアンテナもさらなる小型化を図るために、アンテナコアの厚み、長さをさらに低減する必要がある。

【０００５】

しかしながら、アンテナの体積減少に伴い、アンテナのＬ値またはＱ値が低下し、Ｌ値とＱ値の積に比例するアンテナ感度が低下する。その結果、実用上充分な電波受信感度が得られなくなることがある。

【０００６】

そこで本発明はこれらの問題を解決するために、本発明ではアンテナの長さ寸法を変えずに、Ｌ値、Ｑ値を向上させ、アンテナコアの送受信感度の向上を実現すること、或いは感度を変えずに更なる薄型化、小型化を実現することを課題とする。

【課題を解決するための手段】

【０００７】

このような課題を解決するために鋭意研究の結果以下のことを見出した。

【０００８】

本発明は、芯材に絶縁体で被覆された導電性線材が巻回されているアンテナにおいて、該導電性線材が巻回されている領域の端部に堰が設けられていることを特徴とするアンテナを提供する。

【０００９】

前記アンテナに設けられている堰は、金属磁性粉末を含む組成物から成ることを特徴とする。

【００１０】

前記アンテナに設けられている堰は、金属磁性粉末と樹脂とからなる組成物を含む複合体から成ることを特徴とする。

【００１１】

前記金属磁性粉末が、ナノ結晶磁性金属材料を用いることは本発明の好ましい態様の１つである。

【００１２】

前記金属磁性粉末の形状は偏平状であることを特徴とする前記請求項１～４記載のアンテナ。

【００１３】

本発明は、堰を作るための金属磁性粉末５～６０Ｖｏｌ％と樹脂９５～４０Ｖｏｌ％とからなる組成物を提供する。

【発明の効果】

【００１４】

絶縁体で被覆された導電性線材が巻回されているアンテナにおいて、該導電性線材が巻回されている領域の端部に堰が設けられることにより、アンテナのＬ値が向上し小型高感度アンテナを得ることができた。その結果、Ｌ値が一定で良い場合は、アンテナコイルの銅巻線数が減らせる、その結果、銅損が減り、Ｑ値が向上でき、アンテナの送受信感度が大幅に向上する。また銅巻線を減らした分、アンテナの幅、高さが小さくなり、アンテナの小型化、薄型化が可能となった。

【発明を実施するための最良の形態】

【００１５】

次に本発明の実施の形態について具体的に説明する。

（アンテナ）

本発明のアンテナの例を図１に示す。本発明は、アンテナの芯材１１、堰１２、被覆導電性線材が巻回されている領域１３の３つの要素から構成される。

【００１６】

アンテナの芯材は、磁性体からなり、アンテナの芯材の中央部を含む領域に銅線からなる巻線コイルがアンテナの芯材に巻回されている。被覆導電性線材が巻回されている領域

InductEV, Inc.
Exhibit 1031
Page 325

は、堰に接していることが好ましい。堰は、磁性金属粉末と樹脂の組成物により形成されている。本願において、この組成物により形成されている堰のことを単に複合体と呼ぶ場合がある。

（アンテナの芯材）

本発明のアンテナの芯材について説明する。

【００１７】

アンテナの芯材の形状は円柱、角柱等の種々の形状のが可能である。その中でも、直方体もしくは角柱が、積層体を切断加工して容易に作製できるため好ましい。

【００１８】

アンテナの芯材は磁性体からなり、磁性体の形態は板状もしくは粉末状である。材料としては、例えば、珪素鋼板、パーマロイ、センダスト、軟磁性フェライト、アモルファス磁性金属、ナノ結晶磁性金属等が挙げられる。珪素鋼板、パーマロイなどは打抜き等でアンテナの芯材形状に加工する。またセンダストなどは水ガラスや樹脂等と混合して一体成形しアンテナの芯材形状とする。

【００１９】

このなかでもＣｏ系アモルファス磁性金属薄帯や、Ｆｅ系アモルファス磁性金属薄帯、ナノ結晶磁性金属薄帯などは、透磁率が高く、損失が低いため小型薄型用アンテナコア材料として好適である。但し、１枚が１０μｍ～３０μｍと薄いため、必要な性能を得るために、実際には複数枚を積層して、アンテナの芯材形状とする。ポリイミド等の耐熱樹脂とＣｏ系アモルファス磁性金属薄帯や、Ｆｅ系アモルファス磁性金属薄帯、ナノ結晶磁性金属薄帯が交互に積層された積層体からなるアンテナの芯材は、この中でも、Ｃｏ系アモルファス磁性金属薄帯や、Ｆｅ系アモルファス磁性金属薄帯とポリイミド等の耐熱樹脂からなる積層体が最も好ましい。またこれらの積層体が積層後、非晶質金属の磁気特性向上に必要な熱処理ができ、さらにその後、機械加工が出来る。

【００２０】

この非晶質金属と耐熱樹脂からなる積層体は以下の方法で作製することができる。

（非晶質合金薄帯）

本発明のアンテナに使用される非晶質金属薄帯に用いられる磁性材料としては、Ｆｅ系、Ｃｏ系の非晶質金属薄帯が用いられる。これらの非晶質金属薄帯は、通常溶融金属を急冷ロールを用いて、急冷して得られる。通常は１０～５０μｍの厚さであり、好ましくは１０～３０μｍの厚さの薄帯が用いられる。

【００２１】

Ｆｅ系非晶質金属材料としては、Ｆｅ－Ｓｉ－Ｂ系、Ｆｅ－Ｂ系、Ｆｅ－Ｐ－Ｃ系などのＦｅ－半金属系非晶質金属材料や、Ｆｅ－Ｚｒ系、Ｆｅ－Ｈｆ系、Ｆｅ－Ｔｉ系などのＦｅ－遷移金属系非晶質金属材料を挙げることができる。Ｃｏ系非晶質金属材料としてはＣｏ－Ｓｉ－Ｂ系、Ｃｏ－Ｂ系などの非晶質金属材料が例示できる。これらの中でも、アンテナ特性としてのＱ値が高い材料としては、以下の組成のものがより好ましい。

【００２２】

非晶質金属薄帯の組成が、一般式$(Co_{1-c}Fe_c)_{1-a-b}X_aY_b$（式中のＸは、Ｓｉ，Ｂ，Ｃ，Ｇｅから選ばれる少なくとも１種類以上の元素を表し、ＹはＺｒ，Ｎｂ，Ｔｉ，Ｈｆ，Ｔａ，Ｗ，Ｃｒ，Ｍｏ，Ｖ，Ｎｉ，Ｐ，Ａｌ，Ｐｔ，Ｐｈ，Ｒｕ，Ｓｎ，Ｓｂ，Ｃｕ，Ｍｎ，希土類元素から選ばれる少なくとも１種類以上の元素で表される。ｃ，ａ，ｂは、それぞれ、$0 \leqq c \leqq 0.2$、$10 < a \leqq 35$、$0 \leqq b \leqq 30$ ここでａ，ｂは原子%）で表される組成が好ましい。上記非晶質金属薄帯のＣｏのＦｅ置換は非晶質合金の飽和磁化の増加に寄与する傾向にある。このため、置換量ｃは$0 \leqq c \leqq 0.2$であることが好ましく、$0 \leqq c \leqq 0.1$であることがさらに好ましい。

【００２３】

Ｘ元素は本発明に用いる非晶質金属薄帯を製造する上で、非晶質化のために結晶化速度

InductEV, Inc.
Exhibit 1031
Page 326

を低減するために有効な元素である。Ｘ元素が１０原子％より少ないと、非晶質化が低下して一部結晶質が混在し、また、３５原子％を超えると、非晶質構造は得られるものの合金薄帯の機械的強度が低下し、連続的な薄帯が得られなくなる。したがって、Ｘ 元素の量ａは、１０＜ａ≦３５であることが好ましく、さらに好ましくは、１２ ≦ａ≦３０である。

【００２４】

Ｙ元素は、本発明に用いる非晶質金属薄帯の耐食性に効果がある。この中で特に有効な元素は、Ｚｒ，Ｎｂ，Ｍｎ，Ｗ，Ｍｏ，Ｃｒ，Ｖ，Ｎｉ，Ｐ，Ａｌ，Ｐｔ，Ｐｈ，Ｒｕ 元素である。Ｙ元素の添加量は３０％以上になると、耐食性の効果はあるが、薄帯の機械的強度が脆弱になるため、０≦ｂ≦３０であることが好ましい。さらに好ましい範囲は、０≦ｂ≦２０である。

【００２５】

また、前記非晶質金属薄帯は、例えば、所望組成の金属を調合したものを高周波溶解炉等を用いて溶融し、均一な溶融体としたものを、不活性ガス等でフローして、急冷ロールに吹き付けて、急冷して得られる。通常は厚さは５～５０μｍであり、好ましくは１０～３０μｍ の薄帯が用いられる。本発明に用いられる非晶質金属薄帯は、液体急冷方法などによりシート状に作製された非晶質金属材料が使用できる。または，粉末状の非晶質金属材料をプレス成形などによりシート状にしたものを使用することができる。また，本発明に使用される非晶質金属薄帯は，単一非晶質金属薄帯を用いても良いし，複数および多種類の非晶質金属薄帯を重ねたものを用いることができる。

（塗工基材および積層体）

本発明のアンテナの芯材が耐熱樹脂を表面にコートした非晶質金属薄帯とからなる場合、非晶質金属薄帯の原反からロールコータなどのコーティング装置で、非晶質金属薄帯上に液状樹脂の塗膜を作り，これを乾燥させて非晶質金属薄帯に耐熱性樹脂を付与する方法で作製することができる。

【００２６】

非晶質金属薄帯に耐熱性樹脂を付与した多層構造の磁性基材を作製する場合，例えば熱プレスや熱ロールなどにより積層一体化することができる。加圧時の温度は耐熱樹脂の種類により異なるが，概ね，耐熱樹脂硬化物のガラス転移温度以上で軟化もしくは溶融する温度近傍で積層接着することが好ましい。

（アンテナの作製方法）

アンテナの芯材は、目的とする磁性コアに使用されるように所望の形状に加工される。形状加工方法としては、ダイサー加工、打抜き加工、エッチング加工、レーザー加工、放電ワイヤー加工、ウォータージェット等により加工される。この中でも、アンテナの芯材形状が矩形の場合はダイサー加工が好ましい。また矩形以外の形状の場合は打抜き加工もしくはエッチング加工することが好ましい。

【００２７】

アンテナの芯材が非晶質金属材料からなる場合、さらに形状加工を施した磁性積層体もしくは一枚の磁性基材のうち、非晶質金属の磁気特性発現に必要な２００℃から５００℃の熱処理を施す。

（堰）

本発明の堰は、被覆された導電性線材が巻回されている領域の両端に配置される。通常、巻回されている線材と堰は接している。

【００２８】

本発明の堰の形状は、具体的には図１に示すように貫通孔のあいたキャップ状のバルク体を棒状アンテナコアで貫通したり、図２に示すような金属磁性粉末２１からなるケース構造でも良い。ケース２１で棒状アンテナをカバーすることで、巻線時に棒状アンテナのエッジで、巻線コイルの被覆が剥がれ絶縁破壊に至る可能性が大幅に減る。しかしながら、ケース分の厚みが増えるため、薄型化が必要な場合は不利となる。また、堰と堰は連結されていてもよく、例えば、棒状アンテナの表面を磁性複合体のペーストで覆って図２の

InductEV, Inc.
Exhibit 1031
Page 327

ケースのような形状にしても良い。

【００２９】

図１のように堰に貫通孔があいている場合、貫通孔の形状は、アンテナの芯材の断面形状にほぼ一致し、アンテナの芯材に嵌めたときに空隙が無いことが望ましい。また磁性複合体の長手方向の長さは、アンテナの芯材の長手長の２％～３０％の比率であることが良く。さらに好ましくは、長手長の５％～２０％が良い。

（構成材料）

本発明の磁性複合体は、磁性金属粉末と樹脂とを複合して構成される。

【００３０】

以下に磁性金属粉末と樹脂及び複合方法について述べる。

（磁性金属粉末）

本発明に用いられる磁性粉末は、ナノ結晶磁性金属粉、アモルファス磁性金属粉、パーマロイ粉末、センダスト粉末、珪素鋼板粉末などが挙げられる。この中でもアモルファス磁性金属粉とナノ結晶磁性金属粉がアンテナのＬ値及びＱ値向上に著しい改善効果があることを見出した。その中でもナノ結晶非晶質金属粉が好ましく、さらに好ましくは偏平状のナノ結晶非晶質金属粉がアンテナのＬ値及びＱ値向上に著しい改善効果を有している。

（ナノ結晶磁性粉末）

本発明に用いられるナノ結晶磁性材料は組織が粒径１００ｎｍ以下のナノ結晶粒を主成分とする磁性材料であり、非晶質合金を結晶化温度以上で熱処理し、ナノ結晶粒を析出させることで得られる。

【００３１】

ナノ結晶磁性材料の組成としては、ナノ結晶磁性材料として代表的なＦｅ－Ｃｕ－Ｎｂ－Ｓｉ－Ｂ系でもよいが、下記組成に限らないが、最も望ましくは、一般式（$Fe_{1-x}M_x)_{100-a-b-c-d}Si_aAl_bB_cM'_d$（式中、ＭはＣｏ及び／又はＮｉ、Ｍ′はＮｂ、Ｍｏ、Ｚｒ、Ｗ、Ｔａ、Ｈｆ、Ｔｉ、Ｖ、Ｃｒ、Ｍｎ、Ｙ、Ｐｄ、Ｒｕ、Ｇａ、Ｇｅ、Ｃ、Ｐから選ばれる１種類以上の元素を表わす。ｘは原子比を、ａ、ｂ、ｃ、ｄは原子％を示し、それぞれ０≦ｘ≦０．５、０≦ａ≦２４、１≦ｂ≦２０、４≦ｃ≦３０、０≦ｄ≦１０を満たすものとする）で表わされる組成が望ましい。

【００３２】

望ましくは、以下の一般式Ａ、Ｂ、Ｃ、Ｄ、Ｅの５通りで表現される金属粉末が望ましい。

【００３３】

一般式Ａは（$Fe_{1-x}M_x)_{100-a-b-c-d}Si_aAl_bB_cM'_d$（式中、ＭはＣｏ及び／又はＮｉ、Ｍ′はＮｂ、Ｍｏ、Ｚｒ、Ｗ、Ｔａ、Ｈｆ、Ｔｉ、Ｖ、Ｃｒ、Ｍｎ、Ｐｄ、Ｒｕ、Ｇｅ、Ｃ、Ｐ、希土類元素から選ばれる１種類以上の元素を表わす。ｘは原子比を、ａ、ｂ、ｃ、ｄは原子％を示し、それぞれ０≦ｘ≦０．５、０≦ａ≦２４、０．１＜ｂ≦２０、４≦ｃ≦３０、０≦ｄ≦２０を満たすものとする）で表わされる組成である。

【００３４】

一般式Ｂは（$Fe_{1-x}M_x)_{100-a-b-c-d}Cu_aSi_bB_cM'_d$（式中、ＭはＣｏ及び／又はＮｉ、Ｍ‘はＮｂ、Ｍｏ、Ｚｒ、Ｗ、Ｔａ、Ｈｆ、Ｔｉ、Ｖ、Ｃｒ、Ｍｎ、Ｐｄ，Ｒｕ，Ｇｅ，Ｃ，Ｐ、希土類元素から選ばれる１種類以上の元素を表わす。ｘは原子比を、ａ、ｂ、ｃ、ｄは原子％を示し、それぞれ０≦ｘ≦０．４、０．１≦ａ≦３、ｂ≦１９、５≦ｃ≦２５、０＜ｄ≦２０、１５≦ｂ＋Ｃ≦３０を満たすものとする）で表わされる組成である。

【００３５】

一般式Ｃは（$Fe_{1-x}M_x)_{100-a-b}B_aM'_b$（式中、ＭはＣｏ及び／又はＮｉ、Ｍ′はＮｂ、Ｍｏ、Ｚｒ、Ｗ、Ｔａ、Ｈｆ、Ｔｉ、Ｖ、Ｃｒ、Ｍｎ、Ｐｄ、Ｒｕ、Ｇａ、Ｇｅ、Ｃ、希土類元素から選ばれる１種類以上の元素を表わす。ｘは原子比を、ａ、ｂは原子％を示し、それぞれ０≦ｘ≦０．５、０＜ａ≦２０、２≦ｂ≦２０を満たすも

InductEV, Inc.
Exhibit 1031
Page 328

のとする）で表わされる組成である。

【００３６】

一般式Ｄは（$Fe_{1-x}M_x)_{100-a-b-c}P_aM'_bCu_c$（式中、ＭはＣｏ及び／又はＮｉ、Ｍ′はＮｂ、Ｍｏ、Ｚｒ、Ｗ、Ｔａ、Ｈｆ、Ｔｉ、Ｖ、Ｃｒ、Ｍｎ、Ｐｄ、Ｒｕ、Ｇａ、Ｇｅ、Ａｌ，Ｃ、希土類元素から選ばれる１種類以上の元素を表わす。ｘは原子比を、ａ、ｂ、ｃ、ｄは原子％を示し、それぞれ０≦ｘ≦０．５、０＜ａ≦２０、２≦ｂ≦２０、０≦ｃ≦３を満たすものとする）で表わされる組成で表される。

【００３７】

一般式Ｅは（$Fe_{1-x}M_x)_{100-a-b}M_aM'_b$（式中、ＭはＣｏ及び／又はＮｉ、Ｍ′はＴａ、Ｚｒ，Ｈｆ、Ｔｉ，Ｎｂ、Ｍｏ、Ｗ、Ｖ、Ｃｒ、Ｍｎ、Ｐｄ、Ｒｕ、Ｇａ、Ｇｅ、Ｓｉ、Ａｌ、Ｐ、Ｃｕ、希土類元素から選ばれる１種類以上の元素を表わす。Ｍ′はＣ、Ｎ、Ｏから選ばれる１種類以上の元素を表わす。ｘは原子比を、ａ、ｂは原子％を示し、それぞれ０≦ｘ≦０．５、２＜ａ≦３０、４≦ｂ≦３０を満たすものとする）で表わされる組成で表される。

【００３８】

なお、上記組成の合金において、これらの構成元素以外に合金を作製する上で使用母材に含まれるＳなどの不純物は不可避である。

【００３９】

磁性材料に含まれるナノ結晶粒は、１００ｎｍ以下、望ましくは５０ｎｍ以下、更に望ましくは、３０ｎｍ以下が望ましい。磁性材料にこれらナノ結晶粒が含まれることで、保磁力の低減等の軟磁気特性の向上が見られる。ナノ結晶粒は、実験的には、Ｘ線回折を測定し、、ピーク半値幅より結晶粒のサイズを測定することができる。

【００４０】

一方、本発明に用いられる非晶質磁性材料は、熱処理後も非晶質構造を維持しており、非晶質磁性材料の組成としては、これに制限を受けないが、一般式（$Fe_{1-x}M_x)_{100-a-b-c}Si_aB_bM'_c$（式中、ＭはＣｏ及び／又はＮｉ、Ｍ′はＮｂ、Ｍｏ、Ｚｒ、Ｗ、Ｔａ、Ｈｆ、Ｔｉ、Ｖ、Ｃｒ、Ｍｎ、Ｙ、Ｐｄ、Ｒｕ、Ｇａ、Ｇｅ、Ｃ、Ｐから選ばれる１種類以上の元素を表わす。ｘは原子比を、ａ、ｂ、ｃは原子％を示し、それぞれ０≦ｘ＜１、０≦ａ≦２４、４≦ｂ≦３０、０≦ｃ≦１０を満たすものとする）が望ましいが、これに限定されるものでは無い。

【００４１】

本発明に用いられる磁性粉末の厚み、粒径は厚み５ミクロン以下の扁平状の形状を有しているものが良く、更に望ましくは、厚み５ミクロン以下、粒径３００ミクロン以下が望ましい。更に望ましくは、厚み３ミクロン以下、粒径２００ミクロン以下が望ましい。

【００４２】

本発明に用いられる磁性粉末の厚み、粒径は厚み５ミクロン以下の扁平状の形状を有しているものが良いが、円盤型、楕円回転体型、球型、針状、不定形などであっても良いが、厚みが５ミクロン以下であるような薄型の磁性粉末がアンテナのＬ値、Ｑ値を向上する上で望ましい。

【００４３】

本発明に用いられる磁性粉末は、上記の扁平状磁性粉末の単独でも良いが、球状磁性粉末や他の形状の磁性粉末と混合で用いても良い。

【００４４】

本発明の磁性粉末の製造方法であるが、合金溶湯を急冷し得られた非晶質リボンを作成した後、粉末砕し粉末末を得る方法があるが、粉砕する方法は粉砕時の応力により磁気特性の低下が起こりやすいため、水アトマイズ方法やガスアトマイズ方法等の直接磁性粉が得られる方法が望ましい。

【００４５】

本発明に用いられる磁性材料は、上記非晶質磁性材料、ナノ結晶磁性材料それぞれ単独でも良いが、ナノ結晶磁性材料と非晶質金属材料とを混合させても良い。更に、他の磁性

InductEV, Inc.
Exhibit 1031
Page 329

材料、例えば、フェライトやセンダストなどとの混合して用いても良い。

（樹脂材料）

本発明の堰の成形に金属紛体とともに用いられる樹脂材料の目的は、磁性複合体間の電気的絶縁と、磁性金属粉間の結着である。 このような材料として、無機系材料では水ガラス、セラミックス、有機系材料としては熱可塑性樹脂、熱硬化性樹脂など種々の樹脂が挙げられるが、特に磁気特性向上に２００℃以上の熱処理が必要な場合は、熱可塑性、弾性率の低い耐熱樹脂を混ぜることが、優れた性能を発揮する上で効果的である。

【００４６】

本発明に用いられる耐熱性樹脂は、非晶質金属薄帯の磁気特性を向上させる最適熱処理温度で熱処理される場合があるので、当該熱処理温度で熱分解の少ない材料を選定することが必要になる。非晶質金属薄帯の熱処理温度は、非晶質金属薄帯を構成する組成および目的とする磁気特性により異なるが、良好な磁気特性を向上させる温度は概ね２００～６００℃の範囲にあり、さらに好ましくは３００℃～５００℃の範囲である。

【００４７】

本発明に用いられる耐熱性樹脂としては、熱可塑性、非熱可塑性、熱硬化性樹脂を挙げることができる。中でも熱可塑性樹脂を用いるのが好ましい。また、本発明においてバインダーとして用いられる熱可塑性樹脂は、ガラス転移温度Ｔｇが４２０℃以下が良く、更に、望ましくは、ガラス転移温度Ｔｇが５０℃以上４２０℃以下のものが良く、更に望ましくは、ガラス転移温度Ｔｇが６０℃以上３５０℃以下のものが良い。更に望ましくは、ガラス転移温度Ｔｇが１００℃以上３００℃以下のものが良い。

【００４８】

この製造方法により、耐熱性樹脂を樹脂化しているため、室温でタック性がなく、また安定であるため、取り扱いが簡便であり、積層時の作業性がよく工程の歩留まりが向上できるメリットがある。

【００４９】

本発明に用いられる耐熱性樹脂としては、前処理として１２０℃で４時間乾燥を施し、その後、窒素雰囲気下、３００℃で２時間保持した際の重量減少量を、ＤＴＡ－ＴＧを用いて測定され、通常１％以下、好ましくは０．５％以下であるものが用いられる。具体的な樹脂としては、ポリイミド系樹脂、ケイ素含有樹脂、ケトン系樹脂、ポリアミド系樹脂、液晶ポリマー，ニトリル系樹脂，チオエーテル系樹脂，ポリエステル系樹脂，アリレート系樹脂，サルホン系樹脂，イミド系樹脂，アミドイミド系樹脂を挙げることができる。これらのうちポリイミド系樹脂，スルホン系樹脂、アミドイミド系樹脂を用いるのが好ましい。

【００５０】

また本発明において２００℃以上の耐熱性を必要としない場合、これに限定されないが、本発明に用いられる熱可塑性樹脂を具体的に挙げるとすれば、ポリエーテルサルホン、ポリエーテルイミド、ポリエーテルケトン、ポリエチレンテレフタレート、ナイロン、ポリブチレンテレフタレート、ポリカーボネート、ポリフェニレンエーテル、ポリフェニレンスルフィド、ポリサルホン、ポリアミド、ポリアミドイミド、ポリ乳酸、ポリエチレン、ポリプロピレン等々あるが、この中でも、望ましくは、ポリエーテルサルホン、ポリエーテルイミド、ポリエーテルケトンポリエチレン、ポリプロピレン、エポキシ樹脂、シリコン樹脂、ゴム系樹脂（クロロプレンゴム、シリコンゴム）等を用いることができる。

【００５１】

（堰を形成する組成物）

本発明の堰を形成する組成物の作成方法としては、磁性金属粉末と、樹脂粉末を粉砕粉を混練する方法や、 磁性粉末と樹脂粉末を溶媒を用いず乾式で混合後、ホットプレスする方法や、ジメチルアセトアミドのような有機溶媒に樹脂を溶かし、磁性粉末を混合し、ペーストを作成し、金型に中で乾燥させ磁性複合体を作成する方法等がある。この中でも、磁性粉末と樹脂を乾式で混合し、直接ホットプレスをする方法で磁性複合体を作製することが好ましい。

InductEV, Inc.
Exhibit 1031
Page 330

【００５２】
本発明の磁性複合材料の金属粉末と樹脂の配合比は、好ましくは５Ｖｏｌ％～５０Ｖｏｌ％用いるのが好ましく、さらに好ましくは１０Ｖｏｌ％～３０Ｖｏｌ％用いることが好ましく、さらに好ましくは１５Ｖｏｌ％～２５％Ｖｏｌ％用いることが好ましい。この範囲にあると本発明の効果であるアンテナのＬ値Ｑ値が大幅に向上できることを見出した。
（形状加工方法）
材料の複合化の後、アンテナの芯材に付加できるように形状加工を施す。成形方法は、磁性複合材料がペレット状の場合は射出成形または押出し成形が好適である。また溶剤を含まない混合粉の場合は、熱プレス等の方法が挙げられる。射出成形や押出し成形は量産時に低コストで製造できるため好ましい。
【実施例１】
【００５３】
アンテナの芯材は，ハネウェル社製、Ｍｅｔｇｌａｓ：２７１４Ａ（商品名）、幅約５０ｍｍ，厚み約１５μｍである$Co_{66}Fe_4Ni_1(BSi)_{29}$（原子％）の組成を持つ非晶質金属薄帯を使用した。この薄帯の片面全面にＥ型粘度計で測定（２５℃）し、約０．３Ｐａ・ｓの粘度のポリアミド酸溶液を付与し，１４０℃で乾燥後、２６０℃でキュアし、非晶質金属薄帯の片面に約６ミクロンの耐熱樹脂（ポリイミド樹脂）を付与した。ポリイミド樹脂は、３，３′－ジアミノジフェニルエーテルと３，３，４，４′－ビフェニルテトラカルボン酸二無水物を１：０．９８の割合で混合し、ジメチルアセトアミド溶媒中で室温にて縮重合して得られたものである。通常は、ポリアミド酸としてジアセチルアミド溶液として用いる。この基材を、４０枚積み重ねて熱プレスすることにより大気中２６０℃３０分、５ＭＰａで、厚み１．０ｍｍの積層体を作製した。磁気特性を発現するためこれをさらに、４００℃１ｈｒ窒素雰囲気中で加圧、加熱し、ダイサーにより長さ１５ｍｍ、幅１ｍｍ、厚さ１ｍｍのアンテナの芯材とした。
【００５４】
次に堰の作製方法を示す。堰は磁性金属粉体と樹脂粉体とを混合して作製される。まず磁性金属粉体の組成は$Fe_{66}Ni_4Si_{14}B_9Al_4Nb_3$の合金を高周波溶解炉で１３００℃の溶湯とし、溶解炉の底に取り付けたノズルを通して溶湯を流下させ、ノズル先に取り付けたガスアトマイズ部より７５ｋｇ／ｃｍ2の高圧ガスで溶湯を微粒化し、更にこの微粒化させた溶湯をロール径１９０ｍｍ、円錐角度８０度、回転数７２００ｒｐｍの回転冷却体に衝突させ、$Fe_{66}Ni_4Si_{14}B_9Al_4Nb_3$（ａｔ％）の組成を有する平均長径１５０ミクロン、平均短径５５ミクロン、平均厚み２ミクロンの扁平状磁性粉を作製した。磁性粉の熱処理前のＸ線回折を測定した結果、磁性粉は典型的な非晶質のハローパターンを示し、完全な非晶質であることが明らかになった。得られた磁性粉を５８０℃で１時間熱処理を行った。磁性粉の熱処理後のＸ線回折を測定した結果、熱処理後の磁性粉は微結晶化しており、ピーク半値幅よりほぼ２０ｎｍの微結晶が析出していることが明らかになった。
【００５５】
堰を作製するための樹脂としてポリエーテルサルホン（以下ＰＥＳ）（三井化学社製）粉末を用いた。ポリエーテルサルホンのペレットをボールミルで粉砕し、ポリエーテルサルホンの粒径１００ミクロンの粉末を作製した。そして、得られたナノ結晶磁性粉を２０Ｖｏｌ％、バインダーとして前記のポリエーテルサルホンの粉末を８０Ｖｏｌ％を混合し、ハイブリッドミキサー（キーエンス社製）にて１０分攪拌し、均一な磁性粉と樹脂からなる混合粉末を得た。
【００５６】
そして、得られたナノ結晶磁性粉を２０Ｖｏｌ％、樹脂粉末として前記のポリエーテルサルホンの粉末を８０体積％を混合し、ハイブリッドミキサー（キーエンス社製）にて１０分攪拌し、均一な磁性粉と樹脂からなる混合粉末を得た。更に、この複合粉末を、３００℃、１５ＭＰａにて１０分間熱プレスを行い、厚さ４ｍｍの複合材シートを作製した。その後ＮＣ工作機により３×３×４ｍｍのブロックに成形した。さらに中心部に１×１角

InductEV, Inc.
Exhibit 1031
Page 331

（ｍｍ）のアンテナの芯材を貫通させるための穴を設けた。

【００５７】

本方法で作製した磁性複合体コアに棒状アンテナの両端に嵌めた後、φ０．１ｍｍのポリウレタン被覆銅線を６００ターン巻回した。

【００５８】

アンテナ特性を評価するため、インダクタＬ値と性能指数Ｑ値を測定し、比透磁率を算出した。測定にはヒューレットパッカード製ＬＣＲメータ４０２４Ａにより測定した。結果を下表に示す。その結果、本発明による実施例１のアンテナは、従来技術に比べて、大幅な磁気特性の向上が可能なことがわかった。

【実施例２】

【００５９】

実施例１とは堰を構成する組成物中の金属粉末形状が球状であることのみ異なる。球状金属粉末の作製方法は、実施例１と同様に磁性金属粉体の組成はＦｅ６６Ｎｉ４Ｓｉ１４Ｂ９Ａｌ４Ｎｂ３の合金を高周波溶解炉で１３００℃の溶湯とし、溶解炉の底に取り付けたノズルを通して溶湯を流下させ、ノズル先に取り付けたガスアトマイズ部より７５ｋｇ／ｃｍ２の高圧ガスで溶湯を微粒化する。その後、冷却固体させ、球状磁性粉体とする。それ以外は全て実施例１と同様の材料、および工程でアンテナを作製した。

【００６０】

アンテナ特性を評価するため、インダクタＬ値と性能指数Ｑ値を測定し、比透磁率を算出した。測定にはヒューレットパッカード製ＬＣＲメータ４０２４Ａにより測定した。結果を下表に示す。その結果、本発明による実施例２のアンテナは、さらに大幅な磁気特性の向上が可能なことがわかった。

【実施例３】

【００６１】

本発明のアンテナの実施例の構成を図１に示す。実施例１とは金属粉末組成が、Ｃｏ系非晶質金属であることのみ異なる。Ｃｏ系非晶質金属は以下の通り（後で記入）。それ以外は全て実施例１と同様の材料、および工程でアンテナを作製した。

【００６２】

アンテナ特性を評価するため、インダクタＬ値と性能指数Ｑ値を測定し、比透磁率を算出した。測定にはヒューレットパッカード製ＬＣＲメータ４０２４Ａにより測定した。結果を下表に示す。その結果、本発明による実施例２のアンテナは、さらに大幅な磁気特性の向上が可能なことがわかった。

【比較例】

【００６３】

本発明の薄型インダクタの比較例の構成を図３に示す。実施例１とは、磁性複合体の構成材料および金属粉末材料だけが異なる。それ以外は全て実施例１と同様の材料、および工程でアンテナを作製した。

【００６４】

アンテナ特性を評価するため、インダクタＬ値と性能指数Ｑ値を測定し、比透磁率を算出した。測定にはヒューレットパッカード製ＬＣＲメータ４０２４Ａにより測定した。結果を下表に示す。

【００６５】

InductEV, Inc.
Exhibit 1031
Page 332

【表１】

	堰の材料				コイルの線径×巻数	アンテナのL×Q値
	磁性粉末の種類	磁性粉末の形状	磁性粉末の体積比率(%)	樹脂		
実施例1	ナノ結晶磁性粉	りん片	20	PES	0.1×600	13×108
実施例2	ナノ結晶磁性粉	球形	20	PES	0.1×600	12×105
実施例3	アモルファス磁性粉	りん片	20	PES	0.1×600	14×110
比較例1	Fe-Si-Cr系粒状磁性粉末	粒状	95	ナイロン	0.1×670	10×90

【図面の簡単な説明】

【００６６】

【図１】本発明のアンテナの構成を示す図である。

【００６７】

【図２】本発明の小型高感度アンテナの斜視図（巻線コイルなし）

【００６８】

【図３】比較例のアンテナの構成を示す図である。

【符号の説明】

【００６９】

１１ アンテナの芯材

１２ 堰

１３ 被覆導線線材が巻回されている領域

２１ 磁性粉末複合体からなるケース

InductEV, Inc.
Exhibit 1031
Page 333

【図１】

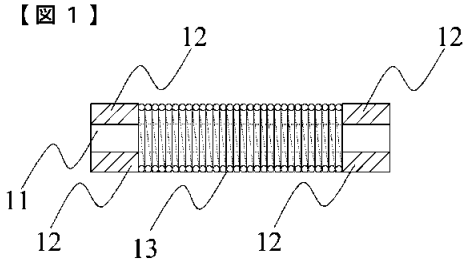

【図２】

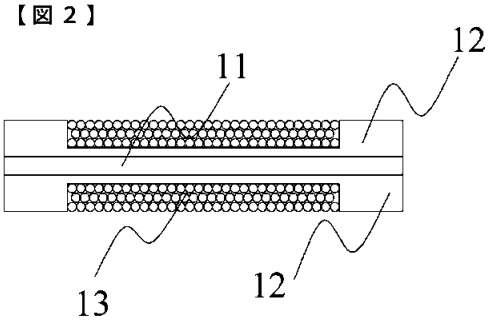

【図３】

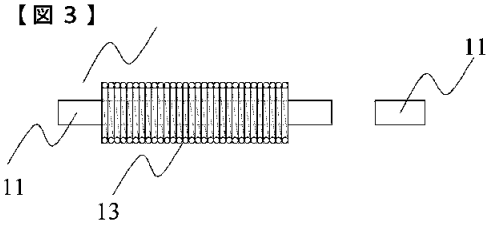

JP2005-057444 Machine Translation

* NOTICES *

JPO and INPIT are not responsible for any
damages caused by the use of this translation.

1.This document has been translated by computer. So the translation may not reflect the original precisely.
2.**** shows the word which can not be translated.
3.In the drawings, any words are not translated.

CLAIMS
[Claim(s)]
[Claim 1]
An antenna, wherein a weir is provided by end of a region around which this conductive wire rod is wound in an antenna with which a conductive wire rod covered with an insulator is wound around a core material.
[Claim 2]
Said antenna according to claim 1, wherein the aforementioned weir comprises a constituent containing magnetic metal powder.
[Claim 3]
Said antenna according to claim 1, wherein the aforementioned weir comprises a complex containing a constituent consisting of magnetic metal powder and resin.
[Claim 4]
The antenna according to claim 1 to 3, wherein the aforementioned magnetic metal powder is a nano crystal magnetic metal material.
[Claim 5]
Said antenna according to claim 1 to 4, wherein form of the aforementioned magnetic metal powder is flat state.
[Claim 6]
A constituent for manufacturing a complex of aforementioned Claim 3 containing a constituent which consists of the magnetic metal powder 5 - 60Vol%, and the resin 95 - 40Vol%.

DETAILED DESCRIPTION
[Detailed Description of the Invention]
[Field of the Invention]
[0001]
The present invention relates to a stick antenna among the antenna elements which convert an electric wave to an electrical signal. For example, it is an antenna which receives, transmits, transmits and receives an electric wave, and is RFID. The ** antenna, the antenna for in-vehicle immobilizers, the antenna for electronic keys, the antenna for wave clocks, radio, the miniaturized antenna for portable devices, etc. are mentioned. In order to improve the sensitivity of these stick antennas further, it is related with the antenna which gave the magnetic-metal-powder block body and magnetic-metal-powder block which are added to one side or the both ends of a stick antenna.

[Background of the Invention]
[0002]
Diversification of the types of products accompanying expansion of the demand of the magnetic application products used for the electrical and electric equipment and this is progressing quickly with remarkable development of an electron and a telecommunications sector, and the demand of slimming down, a miniaturization, and efficient-izing is increasing especially with the spread of portable devices. As for the antenna element which is used for these apparatus and which converts an electric wave to an electrical signal, slimming down, a miniaturization, and efficient-ization are desired more.
[0003]
As such [conventionally] an antenna, in JP,7-278763,A (Patent document 1), As shown in Fig.3, the antenna with it is proposed by giving winding to a rod-like core, using the amorphous metal thin band material which is excellent in especially magnetic properties as a cylindrical antenna core material. [high Q value and] [high sensitivity / above 100 kHz] The method of JP,2001-337181,A (Patent document 2) is proposed as a remedy of this technology. According to this method, a flange is formed in the both ends of the rod-like heartwood of an antenna, and the coil is wound between that flange. By adding this flange, it becomes possible to improve the receiving sensitivity of an antenna. However, the further slimming down, the miniaturization, and the highly efficient antenna are demanded with the miniaturization of apparatus.
[Patent document 1] JP,7-278763,A
[Patent document 2] JP,2002-278763,A
[Description of the Invention]
[Problem to be solved by the invention]
[0004]
The information and telecommunications using an electric wave in recent years are used for transmission and reception of the information on RFID used, for example for transponders, such as a locking system for crime prevention, an ID card, and a tag, or a wave clock, radio, etc. In these uses, since it is used for a tag, a key, etc. to carry, the market demand of the further slimming down and card-izing occurs. In order for the antenna of such a use to also attain the further miniaturization, it is necessary to reduce the thickness of an antenna core, and length further.
[0005]
However, in connection with the volume decrease of an antenna, L value or Q value of an antenna is deteriorated, and the antenna sensitivity proportional to the product of L value and Q value is deteriorated. As a result, practically sufficient electric wave receiving sensitivity may not no longer be obtained.
[0006]
Then, in order that the present invention may solve these problems, in the present invention, without changing the linear dimension of an antenna, L value and Q value are improved and let it be problem to realize improvement in the transmission and reception sensitivity of an antenna core, or to realize the further slimming down and a miniaturization, without changing sensitivity.
[Means for solving problem]
[0007]
In order to solve such problem, the following things were intensively found out as a result of research.
[0008]

In the antenna with which the conductive wire rod covered with the insulator is wound around the core material, the present invention provides an antenna, wherein the weir is provided by the end of a region around which this conductive wire rod is wound.
[0009]
The weir currently provided by the aforementioned antenna comprises the constituent containing magnetic metal powder.
[0010]
The weir currently provided by the aforementioned antenna comprises the complex containing the constituent consisting of magnetic metal powder and resin.
[0011]
It is one of the preferable modes of the present invention that the aforementioned magnetic metal powder uses a nano crystal magnetic metal material.
[0012]
Said antenna according to claim 1 to 4, wherein the form of the aforementioned magnetic metal powder is flat state.
[0013]
The present invention provides the constituent which consists of the magnetic metal powder 5 for making a weir - 60Vol%, and the resin 95 - 40Vol%.
[Effect of the Invention]
[0014]
In the antenna around which the conductive wire rod covered with the insulator is wound, when a weir was provided by the end of a region around which this conductive wire rod is wound, L value of the antenna was able to improve and the small high sensitivity antenna was able to be obtained. As a result, when L value may be constant, as a result it can reduce the number of copper winding of an antenna coil, copper loss decreases, Q value can be improved and the transmission and reception sensitivity of an antenna improves substantially. The part which reduced copper winding, the width of an antenna, and height became small, and the miniaturization of an antenna and slimming down of them were attained.
[Best Mode of Carrying Out the Invention]
[0015]
Next, it describes specifically about an embodiment of the invention.
(Antenna)
The example of the antenna of the present invention is shown in Fig.1. The present invention comprises three elements, the core material 11 of an antenna, the weir 12, and the region 13 where the covering conductive wire rod is wound.
[0016]
The winding coil which the core material of an antenna consists of magnetic bodies, and becomes a region including the central part of the core material of an antenna from copper wire is wound around the core material of the antenna. As for the region where the covering conductive wire rod is wound, it is preferable that it is in contact with the weir. The weir is formed with the constituent of magnetic metal powder and resin. In an application concerned, the weir currently formed with this constituent may only be called a complex.
(Core material of an antenna)
It describes about the core material of the antenna of the present invention.
[0017]

That of various form, such as a pillar and a square pillar, is possible for the form of the core material of an antenna. Since a rectangular parallelepiped or a square pillar carries out cut processing of the laminated body and can produce it easily also in it, it is preferable.
[0018]
The core material of an antenna consists of magnetic bodies, and the form of a magnetic body is plate-like or powdered. As a material, a silicon steel, permalloy, Sendust, soft magnetism ferrite, amorphous magnetic metal, and nano crystal magnetic metal etc. are mentioned, for example. Silicon steel, a permalloy, etc. process the core material form of an antenna by die cutting etc. Sendust is mixed with water glass, resin, etc., forms integrally, and is taken as the core material form of an antenna.
[0019]
Also in this, their amplitude permeability is high, and since Co system amorphous magnetic metal thin band, Fe system amorphous magnetic metal thin band, a nano crystal magnetic metal thin band, etc. have the low loss, they are preferable as an antenna core material for small thin shapes. However, 10 micrometers - 30 micrometers, since it is thin, in order to obtain required performance, one sheet laminates two or more sheets actually, and considers it as the core material form of an antenna. The core material of the antenna with which heat-resistant resin, such as polyimide, Co system amorphous magnetic metal thin band, and Fe system amorphous magnetic metal thin band and a nano crystal magnetic metal thin band consist of a laminated body laminated alternately, Also in this, the laminated body which consists of heat-resistant resin, such as Co system amorphous magnetic metal thin band, Fe system amorphous magnetic metal thin band, polyimide, is the most preferable. Heat treatment required for the improvement in magnetic properties of an amorphous metal can be performed after these laminated bodies' laminating, and machining is further possible after that.
[0020]
The laminated body which consists of this amorphous metal and heat-resistant resin is producible by the following methods.
(Amorphous alloy thin band)
As a magnetic material used for the amorphous metal thin band used for the antenna of the present invention, it is Fe. A system and Co The amorphous metal thin band of a system is used. These amorphous metal thin bands are obtained by usually quickly cooling molten metal using a quenching roll. Usually, it is the thickness of 10 - 50 mum, and the thin band of the thickness of 10 - 30 mum is used preferably.
[0021]
Fe [A system and Fe -Hf / A system and Fe -Ti / Fe - transition metal system amorphous metals, such as a system, can be mentioned.] As system amorphous metals, it is Fe -Si -B. A system and Fe -B Fe - semimetal system amorphous metals, such as a system and a Fe -P -C system, and Fe - Zr Co As system amorphous metals, it is Co -Si -B. A system and Co -B Amorphous metals, such as a system, can be illustrated. Also in these, the thing of the following composition is more preferable as a material with high Q value as an antenna characteristic.
[0022]
Composition of an amorphous metal thin band is general formula (Co1-CFeC) 1-a-bXaYb (X in a formula). The element beyond at least 1 kind chosen from Si, B, C, and germanium is expressed, Y It is expressed by the element beyond at least 1 kind chosen from ** Zr, Nb, and Ti, Hf, Ta, W, Cr, Mo, V, nickel, P, aluminum, Pt, Ph, Ru, Sn, Sb, Cu, Mn, and a rare earth element. c a and b -- respectively -- 0<=c<=0.2, 10< a<=35, and 0<=b<=30 -- a and b have here

the preferable composition expressed by the atom %. Fe of Co of the above-mentioned amorphous metal thin band Substitution tends to contribute to the increase in the saturation magnetization of an amorphous alloy. For this reason, as for the substitution volume c, it is preferable that it is 0<=c<=0.2, and it is still more preferable that it is 0<=c<=0.1.
[0023]
When an X element manufactures the amorphous metal thin band used for the present invention, in order to reduce a crystallization rate for amorphous-izing, it is an effective element. If amorphous-ization is deteriorated, a crystalline substance is intermingled in part, if there are few X elements than ten atom %, and 35 atom % is exceeded, the mechanical strength of the alloy thin band of that from which amorphous structure is acquired will be deteriorated, and a continuous thin band will no longer be obtained. Therefore, X It is preferable still more preferable that it is 10< a<=35, and the quantity a of an element is 12<=a<=30.
[0024]
Y element has an effect in the corrosion resistance of the amorphous metal thin band used for the present invention. The especially effective elements in this are Zr, Nb, Mn, W, Mo, Cr, V, nickel, P, aluminum, Pt, Ph, and Ru. It is an element. When the addition amount of Y element will be not less than 30%, there is a corrosion-resistant effect, but since the mechanical strength of a thin band becomes vulnerable, it is preferable that it is 0<=b<=30. The still more preferable range is 0<=b<=20.
[0025]
The aforementioned amorphous metal thin band carries out melting of what prepared the metal of request composition using a high frequency smelter etc., for example, carries out the flow of what was used as the uniform melting object with inactive gas etc., is sprayed on a quenching roll, and is quickly cooled and obtained. Usually, thickness is 5-50 micrometers and is 10-30 micrometers preferably. A thin band is used. The amorphous metals produced by the sheet shaped by the liquid quick cooling method etc. can be used for the amorphous metal thin band used for the present invention. Or what made powdered amorphous metals the sheet shaped by press forming etc. can be used. A single amorphous metal thin band may be used for the amorphous metal thin band used for the present invention, and what piled up plurality and a various kinds of amorphous metal thin band can be used for it.
(A coating base material and a laminated body)
When the core material of the antenna of the present invention consists of an amorphous metal thin band which carried out the coat of the heat-resistant resin to the surface, with coating devices, such as a roll coater, from the original fabric of an amorphous metal thin band, The coating film of liquefied resin can be made on an amorphous metal thin band, and it can produce by the method of drying this and giving heat resistant resin to an amorphous metal thin band.
[0026]
When producing the magnetic substrate of the multilayer structure which gave heat resistant resin to the amorphous metal thin band, laminate integration can be carried out, for example with heat pressing, a hot calender roll, etc. Although the temperature at the time of application of pressure changes with kinds of heat-resistant resin, it is preferable to carry out lamination adhesion softening or near [which carries out melting] the temperature above the glass transition temperature of a heat-resistant resin curing thing in general.
(Manufacturing method of an antenna)
The core material of an antenna is processed into desired form so that it may be used for the target magnetic core. It is processed by dicer processing, stamping, etching processing, laser

processing, discharge wire processing, water jet, etc. as the shape working method. Dicer processing is preferable when the core material form of an antenna is rectangular also in this. In the case of the form except rectangular, it is preferable stamping or to carry out etching processing.

[0027]

When the core material of an antenna consists of amorphous metals, 200 to 500 required for the magnetic-properties manifestation of an amorphous metal among the magnetic laminated body which performed shape working further, or the magnetic substrate of one sheet degrees C heat treatment is performed.

(Weir)

The weir of the present invention is arranged to the both ends of the region where the covered conductive wire rod is wound. Usually, the wire rod and weir which are wound have touched.

[0028]

The case structure which consists of the magnetic metal powder 21 as penetrates by a rod-like antenna core or shows the bulk body of the cap shape in which the through-hole opened as shown in Fig.1 to Fig.2 specifically may be sufficient as the form of the weir of the present invention.A possibility of covering of a winding coil separating and resulting in a dielectric breakdown with the edge of a stick antenna with covering a stick antenna in the case 21 at the time of winding decreases substantially. However, since the thickness for a case increases, it becomes disadvantageous when slimming down is required. The weir and the weir may be connected, for example, may cover the surface of a stick antenna with the paste of a magnetic complex, and may make it form like the case of Fig.2.

[0029]

As for the form of a through-hole, when the through-hole has opened in the weir like Fig.1, when it corresponds to the sectional shape of the core material of an antenna substantially and inserts in the core material of an antenna, it is desirable for there to be no gap. As for the length of the longitudinal direction of a magnetic complex, it is good that it is the Nagate chief's of the core material's of an antenna's ratio of 2% - 30%. 5% - 20% of the Nagate chief is good still more preferably.

(Component)

The magnetic complex of the present invention compounds magnetic metal powder and resin, and is constituted.

[0030]

Magnetic metal powder, resin, and the compound method are described below.

(Magnetic metal powder)

As for the magnetic powder used for the present invention, nano crystal magnetic metal powder, amorphous magnetic metal powder, permalloy powder, Sendust powder, silicon steel powder, etc. are mentioned. It found out that there was an improvement effect with amorphous magnetic metal powder and nano crystal magnetic metal powder remarkable to L value of an antenna and the improvement in Q value also in this. The flat state nano crystal amorphous metal powder in which nano crystal amorphous metal powder is preferable still more preferable has L value of an antenna, and an improvement effect remarkable to the improvement in Q value also in it.

(Nano crystal magnetic powder)

The nano crystal magnetic material used for the present invention is obtained because an organization is a magnetic material which carries out the main component of the nano crystal

grains with a particle diameter of 100 nm or less, heat-treats an amorphous alloy above crystallization temperature and deposits nano crystal grains.

[0031]

Although a Fe-Cu-Nb-Si-B system typical as a nano crystal magnetic material may be sufficient as composition of a nano crystal magnetic material, and not restricted to the following composition, most desirably, General formula (Fe1-xMx) 100-a-b-c-dSiaAlbBcM'd (among a formula) M expresses Co and/or nickel, and one or more kinds of elements in which M' is chosen from Nb, Mo, Zr, W, Ta, Hf, Ti, V, Cr, Mn, Y, Pd, Ru, Ga, germanium, C, and P. what x shows an atomic ratio, and a, b, c, and d show the atom %, and fills 0<=x<=0.5, 0<=a<=24, 1<=b<=20, 4<=c<=30, and 0<=d<=10, respectively -- carrying out -- the composition expressed is desirable.

[0032]

The metal powder which is five kinds of the following general formulas A, B, and C, D, and E, and is expressed desirably is desirable.

[0033]

The general formula A is (Fe1-xMx)100-a-b-c-dSiaAlbBcM'd (among a formula). M expresses Co and/or nickel, and one or more kinds of elements in which M' is chosen from Nb, Mo, Zr, W, Ta, Hf, Ti, V, Cr, Mn, Pd, Ru, germanium, C, P, and a rare earth element. what x shows an atomic ratio, and a, b, c, and d show the atom %, and fills 0<=x<=0.5, 0<=a<=24, 0.1< b<=20, 4<=c<=30, and 0<=d<=20, respectively -- carrying out -- it is the composition expressed.

[0034]

The general formula B is (Fe1-xMx)100-a-b-c-dCuaSibBcM'd (among a formula). M -- Co, and/or nickel and M -- ' -- one or more kinds of elements chosen from Nb, Mo, Zr, W, Ta, Hf, Ti, V, Cr, Mn, Pd, Ru, germanium, C, P, and a rare earth element are expressed. what x shows an atomic ratio, and a, b, c, and d show the atom %, and fills 0<=x<=0.4, 0.1<=a<=3, b<=19, 5<=c<=25, 0< d<=20, and 15 <=b+C<=30, respectively -- carrying out -- it is the composition expressed.

[0035]

The general formula C is (Fe1-xMx)100-a-bBaM'b (among a formula). M expresses Co and/or nickel, and one or more kinds of elements in which M' is chosen from Nb, Mo, Zr, W, Ta, Hf, Ti, V, Cr, Mn, Pd, Ru, Ga, germanium, C, and a rare earth element. what x shows an atomic ratio, and a and b show the atom %, and fills 0<=x<=0.5, 0< a<=20, and 2<=b<=20, respectively -- carrying out -- it is the composition expressed.

[0036]

The general formula D is (Fe1-xMx)100-a-b-cPaM'bCuc (among a formula). M expresses Co and/or nickel, and one or more kinds of elements in which M' is chosen from Nb, Mo, Zr, W, Ta, Hf, Ti, V, Cr, Mn, Pd, Ru, Ga, germanium, aluminum, C, and a rare earth element. what x shows an atomic ratio, and a, b, c, and d show the atom %, and fills 0<=x<=0.5, 0< a<=20, 2<=b<=20, and 0<=c<=3, respectively -- carrying out -- it is expressed with the composition expressed.

[0037]

The general formula E is (Fe1-xMx)100-a-bMaM'b (among a formula). M expresses Co and/or nickel, and one or more kinds of elements in which M' is chosen from Ta, Zr, Hf, Ti, Nb, Mo, W, V, Cr, Mn, Pd, Ru, Ga, germanium, Si, aluminum, P, Cu, and a rare earth element. M' expresses one or more kinds of elements chosen from C, N, and O. what x shows an atomic ratio, and a and b show the atom %, and fills 0<=x<=0.5, 2< a<=30, and 4<=b<=30, respectively -- carrying out -- it is expressed with the composition expressed.

[0038]

In the alloy of the above-mentioned composition, when producing an alloy in addition to these composing elements, impurities, such as S contained in the base metal used, are inescapable.
[0039]
As for the nano crystal grains contained in a magnetic material, 30 nm or less is desirably desirable still more desirably 50 nm or less 100 nm or less. By these nano crystal grains being contained in a magnetic material, improvement in soft magnetic characteristics, such as reduction of coercive force, is found. Experimentally, nano crystal grains can measure X-ray diffraction, and can measure the size of a crystal grain from peak-mesial-magnitude width.
[0040]
On the other hand, the amorphous magnetic material used for the present invention, After heat treatment is maintaining amorphous structure and it as composition of an amorphous magnetic material, Although restriction is not received in this, it is general formula (Fe1-xMx) 100-a-b-cSiaBbM'c (among a formula). M expresses Co and/or nickel, and one or more kinds of elements in which M' is chosen from Nb, Mo, Zr, W, Ta, Hf, Ti, V, Cr, Mn, Y, Pd, Ru, Ga, germanium, C, and P. what x shows an atomic ratio, and a, b, and c show the atom %, and fills $0<=x<1$, $0<=a<=24$, $4<=b<=30$, and $0<=c<=10$, respectively -- carrying out -- although it is desirable, it is not limited to this.
[0041]
What has the form of 5 microns or less-thick flat shape is at best still more desirable, and the thickness of the magnetic powder used for the present invention and particle diameter have 5 microns or less in thickness, and the desirable particle diameter of 300 microns or less. 3 microns or less in thickness and the particle diameter of 200 microns or less are desirable desirably.
[0042]
Although what has the form of 5 microns or less-thick flat shape is good as for the thickness of the magnetic powder used for the present invention, and particle diameter, Although it may be a disk type, an elliptical solid-of-revolution type, a ball type, a needle, an infinite form, etc., when the magnetic powder of the thin shape of as [whose thickness is 5 microns or less] improves L value of an antenna, and Q value, it is desirable.
[0043]
the magnetic powder used for the present invention -- the above-mentioned flat shape magnetic powder -- being independent -- although -- spherical magnetic powder and others -- it may use by the magnetic powder of form, and mixing.
[0044]
Although it is a manufacturing method of the magnetic powder of the present invention, after creating the amorphous ribbon which may have had the molten metal quickly cooled, there is a method of ******(ing) and obtaining the end of powder, but. Since deterioration of magnetic properties takes place easily with the stress at the time of grinding, the method of grinding has a desirable method by which magnetic powder, such as the water atomization method and the gas atomization method, is obtained directly.

[0045]
the magnetic material used for the present invention -- the above-mentioned amorphous magnetic material and a nano crystal magnetic material -- although it may be [each] independent, a nano crystal magnetic material and amorphous metals may be mixed. It may mix with other magnetic materials, for example, a ferrite, Sendust, etc., and may use.
(Resin material)

The purposes of the resin material used for molding of the weir of the present invention with a metal powder object are the electric insulation between magnetic complexes, and binding between magnetic metal powder. Although various resin, such as thermoplastics and thermosetting resin, is mentioned as water glass, ceramics, and an organic system material with an inorganic system material as such a material, When mixing thermoplasticity and heat-resistant resin with a low elastic modulus especially with the improvement in magnetic properties when not less than 200 degrees C needs to be heat-treated exerts the outstanding performance, it is effective.

[0046]

Since the heat resistant resin used for the present invention may be heat-treated with the optimal heat treatment temperature which improves the magnetic properties of an amorphous metal thin band, it is necessary to select material with few pyrolyses with the heat treatment temperature concerned. Although the heat treatment temperature of an amorphous metal thin band changes with magnetic properties made into composition and the purpose of constituting an amorphous metal thin band, the temperature which improves good magnetic properties is in the range of 200-600 degrees C in general, and the ranges of it are 300 degrees C - 500 degrees C still more preferably.

[0047]

Thermoplasticity, non-thermoplasticity, and thermosetting resin can be mentioned as heat resistant resin used for the present invention. It is preferable to use thermoplastics especially. As for the glass transition temperature Tg, 420 degrees C or less are good, it is still more desirable, not less than 50 degree-C a thing of 420 degrees C or less is [the glass transition temperature Tg] at best still more desirable, and the thermoplastics used as a binder in the present invention has [the glass transition temperature Tg] good not less than 60 degree-C thing of 350 degrees C or less. Not less than 100 degree-C a thing of 300 degrees C or less has the good glass transition temperature Tg desirably.

[0048]

There is a merit to which does not have tack properties at a room temperature, and it is simple, the workability at the time of lamination is good, and the handling of yield of a process can improve with this manufacturing method since it is stable since heat resistant resin is resinified.

[0049]

As heat resistant resin used for the present invention, drying is performed at 120 degrees C as pretreatment for 4 hours, the amount of weight loss at the time of holding at 300 degrees C under a nitrogen atmosphere after that for 2 hours is measured using DTA-TG, and what is 0.5% or less preferably is usually used 1% or less. As specific resin, polyimide system resin, silicon content resin, ketone system resin, polyamide system resin, a liquid crystal polymer, nitrile system resin, thioether series resin, polyester system resin, arylate system resin, Sal Hong system resin, imide system resin, and amide imide system resin can be mentioned. It is preferable to use polyimide system resin, sulfone series resin, and amide imide system resin among these.

[0050]

Supposing it mentions specifically the thermoplastics used for the present invention although not limited to this when you do not need the heat resistance of not less than 200 degrees C in the present invention, Polyether sulphone, polyether imide, polyether ketone, Although there are polyethylene terephthalate, nylon, polybutylene terephthalate, polycarbonate, polyphenylene ether, a polyphenylene sulfide, poly SARUHON, polyamide, polyamidoimide, polylactic acid, polyethylene, polypropylene, etc., Also in this, polyether sulphone, polyether imide, polyether

ketone polyethylene, polypropylene, an epoxy resin, silicon resin, rubber system resin (chloroprene rubber, silicone rubber), etc. can be used desirably.
[0051]
(Constituent which forms a weir)
As a preparation method of the constituent which forms the weir of the present invention, Not using a solvent, magnetic metal powder, the method of mulling a pulverized powder for resin powder and magnetic powder, and resin powder by dry type After mixing, There are a method of carrying out a hotpress, the method of melting resin in an organic solvent like dimethylacetamide, mixing magnetic powder, and creating a paste, and drying a mold in inside and creating a magnetic complex, etc. It is preferable to produce a magnetic complex by the method of mixing resin with magnetic powder by dry type, and carrying out a hotpress directly also in this.
[0052]
the metal powder of the magnetic composite material of the present invention, and the compounding ratio of resin -- preferable -- 5Vol% - 50Vol% -- using -- preferable -- further -- preferable -- 10Vol% - 30Vol% -- using -- preferable -- further -- preferable -- 15Vol% - 25%Vol% -- using is preferable. When it was in this range, it found out that L value Q value of the antenna which is an effect of the present invention could improve substantially.
(The shape working method)
After combining of material, shape working is performed so that it can add to the core material of an antenna. When the magnetic composite material of a forming method is a pellet type, injection moulding or extrusion molding is preferable. In the case of the mixed powder which does not contain a solvent, methods, such as heat pressing, are mentioned. Since injection moulding and extrusion molding can be manufactured by low cost at the time of mass production, they are preferable.
[Work example 1]
[0053]
The amorphous metal thin band with composition of Co66Fe4nickel1 (BSi) 29 (atom %) which is the Honeywell, Inc. make, Metglas:2714A (trade name), about 50 mm in width, and about 15 micrometers in thickness was used for the core material of an antenna. It measured with E type viscosity meter all over one side of this thin band (25 degrees C), and the polyamide acid solution of the viscosity of about 0.3 Pa and s was given, the cure was carried out at 260 degrees C after drying at 140 degrees C, and about 6-micron heat-resistant resin (polyimide resin) was given to one side of the amorphous metal thin band. Polyimide resin mixes a 3,3,4,4'-biphenyl ********** anhydride with 3,3'-diaminodiphenyl ether at a ratio of 1:0.98, and it is obtained by carrying out condensation polymerization of it at a room temperature in a dimethylacetamide solvent. Usually, it uses as a diacetyl amide solution as polyamide acid. The 1.0-mm-thick laminated body was produced by 260 degree-C30 minutes and 5MPa in the atmosphere by accumulating 40 sheets of this base material and carrying out heat pressing. In order to reveal magnetic properties, further, this was pressurized and heated in a 400 degree-C1hr nitrogen atmosphere, and was made into the core material of an antenna (15 mm in length, 1 mm in width, and 1 mm in thickness) by the dicer.
[0054]
Next, the manufacturing method of a weir is shown. A weir mixes magnetic metal powder and resin powder, and is produced. Composition of magnetic metal powder makes the alloy of Fe66Ni4Si14B9Al4Nb3 first a 1300 degrees C molten metal with a high frequency smelter,

Make it flow down a molten metal through the nozzle attached to the bottom of a smelter, and a molten metal is atomized with 75 kg/cm2 of high pressure gas from the gas atomization part attached to the nozzle tip, This molten metal made to atomize The roll diameter of 190 mm, 80 cone angles, It was made to collide with a rotary cooling body with a rotational speed of 7200 rpm, and the diameter of average length of 150 microns, 55 microns of average minor axes, and the flat shape magnetic powder with an average thickness of 2 microns which have composition of Fe66Ni4Si14B9Al4Nb3 (at%) were produced. As a result of measuring the X-ray diffraction before heat treatment of magnetic powder, magnetic powder showed the typical amorphous halo pattern, and the perfect amorphous thing became clear. Heat treatment was performed for the obtained magnetic powder at 580 degrees C for 1 hour. As a result of measuring the X-ray diffraction after heat treatment of magnetic powder, magnetic powder after heat treatment was micro-crystallite-ized, and it became clear that about 20-nm micro crystallite deposits from peak-mesial-magnitude width.

[0055]

Polyether sulphone (henceforth, PES) (made by Mitsui Chemicals, Inc.) powder was used as resin for producing a weir. The ball mill ground the pellet of polyether sulphone and powder with a particle diameter of 100 microns of polyether sulphone was produced. And the powder mixture which mixes 80Vol%, stirs the powder of the aforementioned polyether sulphone by a hybrid mixer (made by KEYENCE CORP.) as a binder 20Vol% for 10 minutes, and consists the obtained nano crystal magnetic powder of uniform magnetic powder and resin was obtained.

[0056]

And the powder mixture which mixes the 80 volume %, stirs the powder of the aforementioned polyether sulphone by a hybrid mixer (made by KEYENCE CORP.) as resin powder 20Vol% for 10 minutes, and consists the obtained nano crystal magnetic powder of uniform magnetic powder and resin was obtained. Heat pressing was performed for this compound powder for 10 minutes in 300 degrees C and 15MPa, and the 4-mm-thick composite sheet was produced. It molded into a 3x3x4-mm block with the NC machine after that. The hole for making the central part penetrate the core material of the antenna of 1x1 angle (mm) furthermore was provided.

[0057]

After inserting in the magnetic complex core produced by this method to the both ends of a stick antenna, 600 ******s of phi0.1mm polyurethane coat copper wire were wound.

[0058]

In order to evaluate an antenna characteristic, an inductor L value and performance-index Q value were measured, and relative permeability was computed. For measurement, it measured with Hewlett Packard LCR meter 4024A. A result is shown in the following table. As a result, the antenna of the working example 1 by the present invention was understood that improvement in large magnetic properties is possible compared with the prior art.

[Work example 2]

[0059]

It differs that the working example 1 only has the spherical metal powder form in the constituent which constitutes a weir. As for the manufacturing method of spherical metal powder, composition of magnetic metal powder makes the alloy of Fe66nickel4Si14B9aluminum4Nb3 a 1300 degrees C molten metal with a high frequency smelter like the working example 1, It is made to flow down a molten metal through the nozzle attached to the bottom of a smelter, and a molten metal is atomized with 75 kg/cm2 of high pressure gas from the gas atomization part attached to the nozzle tip. Then, a cooling solid is carried out and it is considered as spherical

magnetic powder. The antenna was produced at the same material as the working example 1, and a process except [all] it.
[0060]
In order to evaluate an antenna characteristic, an inductor L value and performance-index Q value were measured, and relative permeability was computed. For measurement, it measured with Hewlett Packard LCR meter 4024A. A result is shown in the following table. As a result, the antenna of the working example 2 by the present invention was understood that improvement in still larger magnetic properties is possible.
[Work example 3]
[0061]
The composition of the working example of the antenna of the present invention is shown in Fig.1. It only differs that metal powder composition is Co system amorphous metal in the working example 1. The passage of the following [amorphous metal / Co system] (it enters later). The antenna was produced at the same material as the working example 1, and a process except [all] it.
[0062]
In order to evaluate an antenna characteristic, an inductor L value and performance-index Q value were measured, and relative permeability was computed. For measurement, it measured with Hewlett Packard LCR meter 4024A. A result is shown in the following table. As a result, the antenna of the working example 2 by the present invention was understood that improvement in still larger magnetic properties is possible.
[Comparative Example(s)]
[0063]
The composition of the comparative example of the thin inductor of the present invention is shown in Fig.3. In the working example 1, only the component and metallic powder material of a magnetic complex differ from each other. The antenna was produced at the same material as the working example 1, and a process except [all] it.
[0064]
In order to evaluate an antenna characteristic, an inductor L value and performance-index Q value were measured, and relative permeability was computed. For measurement, it measured with Hewlett Packard LCR meter 4024A. A result is shown in the following table.
[0065]
[Table 1]

	堰の材料				コイルの線径×巻数	アンテナのL×Q値
	磁性粉末の種類	磁性粉末の形状	磁性粉末の体積比率(%)	樹脂		
実施例1	ナノ結晶磁性粉	りん片	20	PES	0.1×600	13×108
実施例2	ナノ結晶磁性粉	球形	20	PES	0.1×600	12×105
実施例3	アモルファス磁性粉	りん片	20	PES	0.1×600	14×110
比較例1	Fe-Si-Cr系粒状磁性粉末	粒状	95	ナイロン	0.1×670	10×90

[Brief Description of the Drawings]
[0066]
[Drawing 1]It is a figure showing the composition of the antenna of the present invention.
[0067]
[Drawing 2]The perspective view of the small high sensitivity antenna of the present invention (with no winding coil)
[0068]
[Drawing 3]It is a figure showing the composition of the antenna of a comparative example.
[Explanations of letters or numerals]
[0069]
11 The core material of an antenna
12 Weir
13 The region where the covered conductor wire rod is wound
21 The case consisting of a magnetic powder complex

TECHNICAL FIELD
[Field of the Invention]
[0001]
The present invention relates to a stick antenna among the antenna elements which convert an electric wave to an electrical signal. For example, it is an antenna which receives, transmits, transmits and receives an electric wave, and is RFID. The ** antenna, the antenna for in-vehicle immobilizers, the antenna for electronic keys, the antenna for wave clocks, radio, the miniaturized antenna for portable devices, etc. are mentioned. In order to improve the sensitivity of these stick antennas further, it is related with the antenna which gave the magnetic-metal-powder block body and magnetic-metal-powder block which are added to one side or the both ends of a stick antenna.

PRIOR ART
[Background of the Invention]
[0002]
Diversification of the types of products accompanying expansion of the demand of the magnetic application products used for the electrical and electric equipment and this is progressing quickly with remarkable development of an electron and a telecommunications sector, and the demand of slimming down, a miniaturization, and efficient-izing is increasing especially with the spread of portable devices. As for the antenna element which is used for these apparatus and which converts an electric wave to an electrical signal, slimming down, a miniaturization, and efficient-ization are desired more.
[0003]
As such [conventionally] an antenna, in JP,7-278763,A (Patent document 1), As shown in Fig.3, the antenna with it is proposed by giving winding to a rod-like core, using the amorphous metal thin band material which is excellent in especially magnetic properties as a cylindrical antenna core material. [high Q value and] [high sensitivity / above 100 kHz] The method of JP,2001-337181,A (Patent document 2) is proposed as a remedy of this technology. According to this method, a flange is formed in the both ends of the rod-like heartwood of an antenna, and the coil is wound between that flange. By adding this flange, it becomes possible to improve the receiving sensitivity of an antenna. However, the further slimming down, the miniaturization, and the highly efficient antenna are demanded with the miniaturization of apparatus.
[Patent document 1] JP,7-278763,A
[Patent document 2] JP,2002-278763,A

EFFECT OF THE INVENTION
[Effect of the Invention]
[0014]
In the antenna around which the conductive wire rod covered with the insulator is wound, when a weir was provided by the end of a region around which this conductive wire rod is wound, L value of the antenna was able to improve and the small high sensitivity antenna was able to be obtained. As a result, when L value may be constant, as a result it can reduce the number of copper winding of an antenna coil, copper loss decreases, Q value can be improved and the transmission and reception sensitivity of an antenna improves substantially. The part which reduced copper winding, the width of an antenna, and height became small, and the miniaturization of an antenna and slimming down of them were attained.

TECHNICAL PROBLEM
[Problem to be solved by the invention]
[0004]
The information and telecommunications using an electric wave in recent years are used for transmission and reception of the information on RFID used, for example for transponders, such as a locking system for crime prevention, an ID card, and a tag, or a wave clock, radio, etc. In these uses, since it is used for a tag, a key, etc. to carry, the market demand of the further slimming down and card-izing occurs. In order for the antenna of such a use to also attain the further miniaturization, it is necessary to reduce the thickness of an antenna core, and length further.
[0005]

However, in connection with the volume decrease of an antenna, L value or Q value of an antenna is deteriorated, and the antenna sensitivity proportional to the product of L value and Q value is deteriorated. As a result, practically sufficient electric wave receiving sensitivity may not no longer be obtained.

[0006]

Then, in order that the present invention may solve these problems, in the present invention, without changing the linear dimension of an antenna, L value and Q value are improved and let it be problem to realize improvement in the transmission and reception sensitivity of an antenna core, or to realize the further slimming down and a miniaturization, without changing sensitivity.

MEANS

[Means for solving problem]

[0007]

In order to solve such problem, the following things were intensively found out as a result of research.

[0008]

In the antenna with which the conductive wire rod covered with the insulator is wound around the core material, the present invention provides an antenna, wherein the weir is provided by the end of a region around which this conductive wire rod is wound.

[0009]

The weir currently provided by the aforementioned antenna comprises the constituent containing magnetic metal powder.

[0010]

The weir currently provided by the aforementioned antenna comprises the complex containing the constituent consisting of magnetic metal powder and resin.

[0011]

It is one of the preferable modes of the present invention that the aforementioned magnetic metal powder uses a nano crystal magnetic metal material.

[0012]

Said antenna according to claim 1 to 4, wherein the form of the aforementioned magnetic metal powder is flat state.

[0013]

The present invention provides the constituent which consists of the magnetic metal powder 5 for making a weir - 60Vol%, and the resin 95 - 40Vol%.

DESCRIPTION OF DRAWINGS

[Brief Description of the Drawings]

[0066]

[Drawing 1]It is a figure showing the composition of the antenna of the present invention.

[0067]

[Drawing 2]Perspective view of the small high sensitivity antenna of the present invention (with no winding coil)

[0068]

[Drawing 3]It is a figure showing the composition of the antenna of a comparative example.

Electronic Acknowledgement Receipt

EFS ID:	15815966
Application Number:	13789860
International Application Number:	
Confirmation Number:	4131
Title of Invention:	WIRELESS ENERGY TRANSFER
First Named Inventor/Applicant Name:	Aristeidis Karalis
Customer Number:	26161
Filer:	Marc M. Wefers/Cheryl Forrest
Filer Authorized By:	Marc M. Wefers
Attorney Docket Number:	01997-0358008
Receipt Date:	20-MAY-2013
Filing Date:	08-MAR-2013
Time Stamp:	13:02:24
Application Type:	Utility under 35 USC 111(a)

Payment information:

Submitted with Payment	no

File Listing:

Document Number	Document Description	File Name	File Size(Bytes)/ Message Digest	Multi Part /.zip	Pages (if appl.)
1		358008-IDS.pdf	132977 9423e182b4939cc6e47b84f2a945ba3264701a1a	yes	2

	Multipart Description/PDF files in .zip description		
	Document Description	**Start**	**End**
	Transmittal Letter	1	1
	Information Disclosure Statement (IDS) Form (SB08)	2	2

Warnings:					
Information:					
2	Foreign Reference	FA1.pdf	874797 2f1c62391e79436c078035005e71f88f5df65d1a	no	28
Warnings:					
Information:					
3	Foreign Reference	FA2.pdf	1638865 0fa5c38217026777b004e1b526cc9831bfa88f41	no	41
Warnings:					
Information:					
4	Foreign Reference	FA3.pdf	789738 77245ad0636e5a2b7bf3d0408387bd68308737d3	no	24
Warnings:					
Information:					
5	Foreign Reference	FA4.pdf	841204 c4aeae2d7d1bd2f05653b69612304ff02f549aae	no	21
Warnings:					
Information:					
6	Foreign Reference	FA5.pdf	689910 a7eeee86db291409ff814237633fec4099caad95	no	28
Warnings:					
Information:					
7	Non Patent Literature	NPL1.pdf	8453557 6e2a64ffb25d99a41c4ffd7dbb6110bb293ea4ee	no	23
Warnings:					
Information:					
8	Non Patent Literature	NPL2.pdf	709211 a0efd2e2ebc10550478482f4a9424a104af40c71	no	12
Warnings:					
Information:					

9	Non Patent Literature	NPL3.pdf	149163 b7e27dba4ac156688a11dc9b306e91e769588ec1	no	3
Warnings:					
Information:					
10	Non Patent Literature	NPL4.pdf	1334461 128d2141b241b5a340374b2cd87b267ecba53028	no	15
Warnings:					
Information:					
			Total Files Size (in bytes):	15613883	

This Acknowledgement Receipt evidences receipt on the noted date by the USPTO of the indicated documents, characterized by the applicant, and including page counts, where applicable. It serves as evidence of receipt similar to a Post Card, as described in MPEP 503.

New Applications Under 35 U.S.C. 111
If a new application is being filed and the application includes the necessary components for a filing date (see 37 CFR 1.53(b)-(d) and MPEP 506), a Filing Receipt (37 CFR 1.54) will be issued in due course and the date shown on this Acknowledgement Receipt will establish the filing date of the application.

National Stage of an International Application under 35 U.S.C. 371
If a timely submission to enter the national stage of an international application is compliant with the conditions of 35 U.S.C. 371 and other applicable requirements a Form PCT/DO/EO/903 indicating acceptance of the application as a national stage submission under 35 U.S.C. 371 will be issued in addition to the Filing Receipt, in due course.

New International Application Filed with the USPTO as a Receiving Office
If a new international application is being filed and the international application includes the necessary components for an international filing date (see PCT Article 11 and MPEP 1810), a Notification of the International Application Number and of the International Filing Date (Form PCT/RO/105) will be issued in due course, subject to prescriptions concerning national security, and the date shown on this Acknowledgement Receipt will establish the international filing date of the application.

IN THE UNITED STATES PATENT AND TRADEMARK OFFICE

Applicant	: Aristeidis Karalis et al.	Art Unit	: 2836
Serial No.	: 13/789,860	Examiner	: Unknown
Filed	: March 8, 2013	Conf. No.	: 4131
Title	: WIRELESS ENERGY TRANSFER		

MAIL STOP AMENDMENT
Commissioner for Patents
P.O. Box 1450
Alexandria, VA 22313-1450

INFORMATION DISCLOSURE STATEMENT

Please consider the references listed on the enclosed PTO-1449 form. Foreign patent documents and non-patent literature are enclosed; cited U.S. patents and patent application publications will be provided on request.

This statement is being filed within three months of the filing date of the application or before the receipt of a first Office Action on the merits. Please apply any necessary charges or credits to Deposit Account 06-1050, referencing the above attorney docket number.

Respectfully submitted,

Date: 5/20/13

Marc M. Wefers
Reg. No. 56,842

Customer Number 26161
Fish & Richardson P.C.
Telephone: (617) 542-5070
Facsimile: (877) 769-7945

23031192.doc

UNITED STATES PATENT AND TRADEMARK OFFICE

UNITED STATES DEPARTMENT OF COMMERCE
United States Patent and Trademark Office
Address: COMMISSIONER FOR PATENTS
P.O. Box 1450
Alexandria, Virginia 22313-1450
www.uspto.gov

APPLICATION NUMBER	FILING OR 371(C) DATE	FIRST NAMED APPLICANT	ATTY. DOCKET NO./TITLE
13/789,860	03/08/2013	Aristeidis Karalis	01997-0358008

CONFIRMATION NO. 4131

26161
FISH & RICHARDSON P.C. (BO)
P.O. BOX 1022
MINNEAPOLIS, MN 55440-1022

PUBLICATION NOTICE

Title:WIRELESS ENERGY TRANSFER

Publication No.US-2013-0181541-A1
Publication Date:07/18/2013

NOTICE OF PUBLICATION OF APPLICATION

The above-identified application will be electronically published as a patent application publication pursuant to 37 CFR 1.211, et seq. The patent application publication number and publication date are set forth above.

The publication may be accessed through the USPTO's publically available Searchable Databases via the Internet at www.uspto.gov. The direct link to access the publication is currently http://www.uspto.gov/patft/.

The publication process established by the Office does not provide for mailing a copy of the publication to applicant. A copy of the publication may be obtained from the Office upon payment of the appropriate fee set forth in 37 CFR 1.19(a)(1). Orders for copies of patent application publications are handled by the USPTO's Office of Public Records. The Office of Public Records can be reached by telephone at (703) 308-9726 or (800) 972-6382, by facsimile at (703) 305-8759, by mail addressed to the United States Patent and Trademark Office, Office of Public Records, Alexandria, VA 22313-1450 or via the Internet.

In addition, information on the status of the application, including the mailing date of Office actions and the dates of receipt of correspondence filed in the Office, may also be accessed via the Internet through the Patent Electronic Business Center at www.uspto.gov using the public side of the Patent Application Information and Retrieval (PAIR) system. The direct link to access this status information is currently http://pair.uspto.gov/. Prior to publication, such status information is confidential and may only be obtained by applicant using the private side of PAIR.

Further assistance in electronically accessing the publication, or about PAIR, is available by calling the Patent Electronic Business Center at 1-866-217-9197.

Office of Data Managment, Application Assistance Unit (571) 272-4000, or (571) 272-4200, or 1-888-786-0101

Substitute Disclosure Form (37 CFR §1.98(b))	U.S. Department of Commerce Patent and Trademark Office	Attorney Docket No.	Application No.
Information Disclosure Statement by Applicant (Use several sheets if necessary)		01997-0358008	13/789,860
		Applicant: Aristeidis Karalis et al.	
		Filing Date: March 8, 2013	Group Art Unit: 2836

U.S. Patent Documents

Examiner Initial	Desig. ID	Document Number	Publication Date	Patentee	Class	Subclass	Filing Date If Appropriate
	1	4,180,795	12/25/1979	Matsuda et al.			
	2	4,450,431	5/22/1984	Hochstein			
	3	4,588,978	5/13/1986	Allen			
	4	5,033,295	7/23/1991	Schmid et al.			
	5	5,374,930	12/20/1994	Schuermann			
	6	5,703,573	12/30/1997	Fujimoto et al.			
	7	5,864,323	1/26/1999	Berthon			
	8	6,563,425	05/13/2003	Nicholson et al.			
	9	6,650,227	11/18/2003	Bradin			
	10	6,839,035	1/4/2005	Addonisio et al.			
	11	7,443,135	10/28/2008	Cho			
	12	7,545,337	6/9/2009	Guenther			
	13	7,863,859	1/4/2011	Soar			
	14	8,131,378	3/6/2012	Greenberg et al.			
	15	2005/0027192	2/3/2005	Govari et al.			
	16	2005/0135122	6/23/2005	Cheng et al.			

Foreign Patent Documents or Published Foreign Patent Applications

Examiner Initial	Desig. ID	Document Number	Publication Date	Country or Patent Office	Class	Subclass	Translation Yes	Translation No
	17	EP 1 524 010	4/20/2005	EPO	A61N	1/372		
	18	SG 112842	7/28/2005	Singapore			English Abstract Only	
	19	WO 2004/015885	2/19/2004	WIPO	H04B	5/00		

Other Documents (include Author, Title, Date, and Place of Publication)

Examiner Initial	Desig. ID	Document
	20	Shanhui Fan et al., "Rate-Equation Analysis of Output Efficiency and Modulation Rate of Photomic-Crystal Light-Emitting Diodes", IEEE Journal of Quantum Electronics, Vol. 36, No. 10, pp. 1123-1130 (October 2000)

Examiner Signature	Date Considered

EXAMINER: Initials citation considered. Draw line through citation if not in conformance and not considered. Include copy of this form with next communication to applicant.

Substitute Disclosure Form

Substitute Disclosure Form	U.S. Department of Commerce Patent and Trademark Office	Attorney Docket No. 01997-0358008	Application No. 13/789,860
Information Disclosure Statement by Applicant (Use several sheets if necessary) (37 CFR §1.98(b))		Applicant Aristeidis Karalis et al.	
		Filing Date March 8, 2013	Group Art Unit 2836

Other Documents (include Author, Title, Date, and Place of Publication)		
Examiner Initial	Desig. ID	Document
	21	Jonathan Fildes, "Wireless Energy Promise Powers Up", BBC News, June 7, 2007 (See http://news.bbc.co.uk/2/hi/6725955.stm)
	22	Klaus Finkenzeller, RFID Handbook – Fundamentals and Applications in Contactless Smart Cards -, Nikkan Kohgyo-sya, Kanno Taihei, first version, pp. 32-37, 253 (8/21/2001),
	23	S. L. Ho et al., "A Comparative Study Between Novel Witricity and Traditional Inductive Magnetic Coupling in Wireless Charging", IEEE Transactions on Magnetics, Vol. 47, No. 5, pp. 1522-1525 (May 2011)
	24	Will Stewart, "The Power to Set you Free", Science, Vol. 317, pp. 55-56 (July 6, 2007)
	25	Copy of Final Office Action with regard to U.S. Application No. 12/639,958 by Examiner Fritz M. Fleming dated June 6, 2013 (18 pages)
	26	Copy of Non-Final Office Action with regard to U.S. Application No. 12/949,580 by Examiner Fritz M. Fleming dated June 17, 2013 (55 pages)
	27	Copy of Final Office Action with regard to U.S. Application No. 12/639,963 by Examiner Fritz M. Fleming dated June 18, 2013 (16 pages)
	28	Copy of Final Office Action with regard to U.S. Application No. 12/649,635 by Examiner Fritz M. Fleming dated June 20, 2013 (20 pages)
	29	Copy of Final Office Action with regard to U.S. Application No. 12/649,813 by Examiner Fritz M. Fleming dated June 24, 2013 (17 pages)
	30	Copy of Final Office Action with regard to U.S. Application No. 12/649,777 by Examiner Fritz M. Fleming dated June 26, 2013 (17 pages)
	31	Copy of Final Office Action with regard to U.S. Application No. 12/649,852 by Examiner Fritz M. Fleming dated June 27, 2013 (19 pages)
	32	Copy of Final Office Action with regard to U.S. Application No. 12/649,904 by Examiner Fritz M. Fleming dated September 26, 2013 (23 pages)
	33	Australian Office Action, Application No. 2007349874; mailed April 27, 2011; Applicant: Massachusetts Institute of Technology; 3 pages
	34	Australian Office Action, Application No. 2011232776; mailed December 2, 2011; Applicant: Massachusetts Institute of Technology; 2 pages
	35	Australian Office Action, Application No. 2011232776; mailed February 15, 2013; Applicant: Massachusetts Institute of Technology; 3 pages
	36	Australian Office Action, Application No. 2006269374; mailed September 18, 2008; Applicant: Massachusetts Institute of Technology; 3 pages
	37	Australian Office Action, Application No. 2010200044; mailed May 16, 2011; Applicant: Massachusetts Institute of Technology; 2 pages
	38	Australian Office Action, Application No. 2011203137; mailed April 18, 2013; Applicant: Massachusetts Institute of Technology; 3 pages
	39	Australian Office Action, Application No. 2009246310; mailed June 13, 2013; Applicant: Massachusetts Institute of Technology; 2 pages
	40	Canadian Office Action, Application No. 2,615,123; mailed November 15, 2012; Applicant: Massachusetts Institute of Technology; 4 pages
	41	Chinese Office Action, Application No. 200780053126.3; mailed October 27, 2011; Applicant: Massachusetts Institute of Technology; 6 pages

Examiner Signature	Date Considered
EXAMINER: Initials citation considered. Draw line through citation if not in conformance and not considered. Include copy of this form with next communication to applicant.	

Substitute Disclosure Form

Substitute Disclosure Form	U.S. Department of Commerce Patent and Trademark Office	Attorney Docket No. 01997-0358008	Application No. 13/789,860
Information Disclosure Statement by Applicant (Use several sheets if necessary) (37 CFR §1.98(b))		Applicant Aristeidis Karalis et al.	
		Filing Date March 8, 2013	Group Art Unit 2836

Other Documents (include Author, Title, Date, and Place of Publication)		
Examiner Initial	Desig. ID	Document
	42	Chinese Office Action, Application No. 200780053126.3; mailed August 6, 2012; Applicant: Massachusetts Institute of Technology; 11 pages
	43	Chinese Office Action, Application No. 200780053126.3; mailed December 19, 2012; Applicant: Massachusetts Institute of Technology; 8 pages
	44	Chinese Office Action, Application No. 201110311000.X; mailed June 18, 2013; Applicant: Massachusetts Institute of Technology; 20 pages
	45	Chinese Office Action, Application No. 200680032299.2; mailed January 22, 2010; Applicant: Massachusetts Institute of Technology; 5 pages
	46	Chinese Office Action, Application No. 200680032299.2; mailed October 17, 2011; Applicant: Massachusetts Institute of Technology; 9 pages
	47	Chinese Office Action, Application No. 200680032299.2; mailed June 4, 2012; Applicant: Massachusetts Institute of Technology; 5 pages
	48	Chinese Office Action, Application No. 201010214681.3; mailed January 26, 2011; Applicant: Massachusetts Institute of Technology; 7 pages
	49	Chinese Office Action, Application No. 201010214681.3; mailed November 2, 2011; Applicant: Massachusetts Institute of Technology; 7 pages
	50	Chinese Office Action, Application No. 201010214681.3; mailed February 13, 2012; Applicant: Massachusetts Institute of Technology; 4 pages
	51	Chinese Office Action, Application No. 201010214681.3; mailed May 29, 2012; Applicant: Massachusetts Institute of Technology; 4 pages
	52	Chinese Office Action, Application No. 201010214681.3; mailed October 10, 2012; Applicant: Massachusetts Institute of Technology; 3 pages
	53	Chinese Office Action, Application No. 201110185992.6; mailed April 11, 2012; Applicant: Massachusetts Institute of Technology; 5 pages
	54	Chinese Office Action, Application No. 201110185992.6; mailed January 4, 2013; Applicant: Massachusetts Institute of Technology; 10 pages
	55	Chinese Office Action, Application No. 200980127634.0; mailed April 2, 2013; Applicant: Massachusetts Institute of Technology; 11 pages
	56	European Office Action, Application No. 06 786 588.1; mailed January 15, 2009; Applicant: Massachusetts Institute of Technology; 5 pages
	57	European Office Action, Application No. 06 786 588.1; mailed April 24, 2013; Applicant: Massachusetts Institute of Technology; 4 pages
	58	European Office Action, Application No. 06 786 588.1; mailed December 3, 2013; Applicant: Massachusetts Institute of Technology; 6 pages
	59	Japanese Office Action, Application No. 2010-500897; mailed May 29, 2012; Applicant: Massachusetts Institute of Technology; 7 pages
	60	Japanese Office Action, Application No. 2011-256729; mailed May 28, 2013; Applicant: Massachusetts Institute of Technology; 7 pages
	61	Japanese Office Action, Application No. 2011-509705; mailed July 16, 2013; Applicant: Massachusetts Institute of Technology; 10 pages
	62	Japanese Office Action, Application No. 2008-521453; mailed January 4, 2011; Applicant: Massachusetts Institute of Technology; 3 pages

Examiner Signature	Date Considered
EXAMINER: Initials citation considered. Draw line through citation if not in conformance and not considered. Include copy of this form with next communication to applicant.	

Substitute Disclosure Form

Substitute Disclosure Form	U.S. Department of Commerce Patent and Trademark Office	Attorney Docket No.	Application No.
Information Disclosure Statement by Applicant (Use several sheets if necessary) (37 CFR §1.98(b))		01997-0358008	13/789,860
		Applicant: Aristeidis Karalis et al.	
		Filing Date: March 8, 2013	Group Art Unit: 2836

Other Documents (include Author, Title, Date, and Place of Publication)		
Examiner Initial	Desig. ID	Document
	63	Japanese Office Action, Application No. 2011-083009; mailed July 2, 2013; Applicant: Massachusetts Institute of Technology; 5 pages
	64	Korean Office Action, Application No. 10-2009-7022442; mailed October 18, 2012; Applicant: Massachusetts Institute of Technology; 5 pages
	65	Korean Office Action, Application No. 10-2009-7022442; mailed January 31, 2013; Applicant: Massachusetts Institute of Technology; 6 pages
	66	Korean Office Action, Application No. 10-2011-7023643; mailed October 23, 2012; Applicant: Massachusetts Institute of Technology; 5 pages
	67	Korean Office Action, Application No. 10-2011-7023643; mailed January 31, 2013; Applicant: Massachusetts Institute of Technology; 3 pages
	68	Korean Office Action, Application No. 10-2013-7013521; mailed August 8, 2013; Applicant: Massachusetts Institute of Technology; 2 pages
	69	Korean Office Action, Application No. 10-2008-7003376; mailed March 7, 2011; Applicant: Massachusetts Institute of Technology; 3 pages
	70	Korean Office Action, Application No. 10-2011-7013029; mailed August 9, 2011; Applicant: Massachusetts Institute of Technology; 4 pages

Examiner Signature	Date Considered
EXAMINER: Initials citation considered. Draw line through citation if not in conformance and not considered. Include copy of this form with next communication to applicant.	

Substitute Disclosure Form

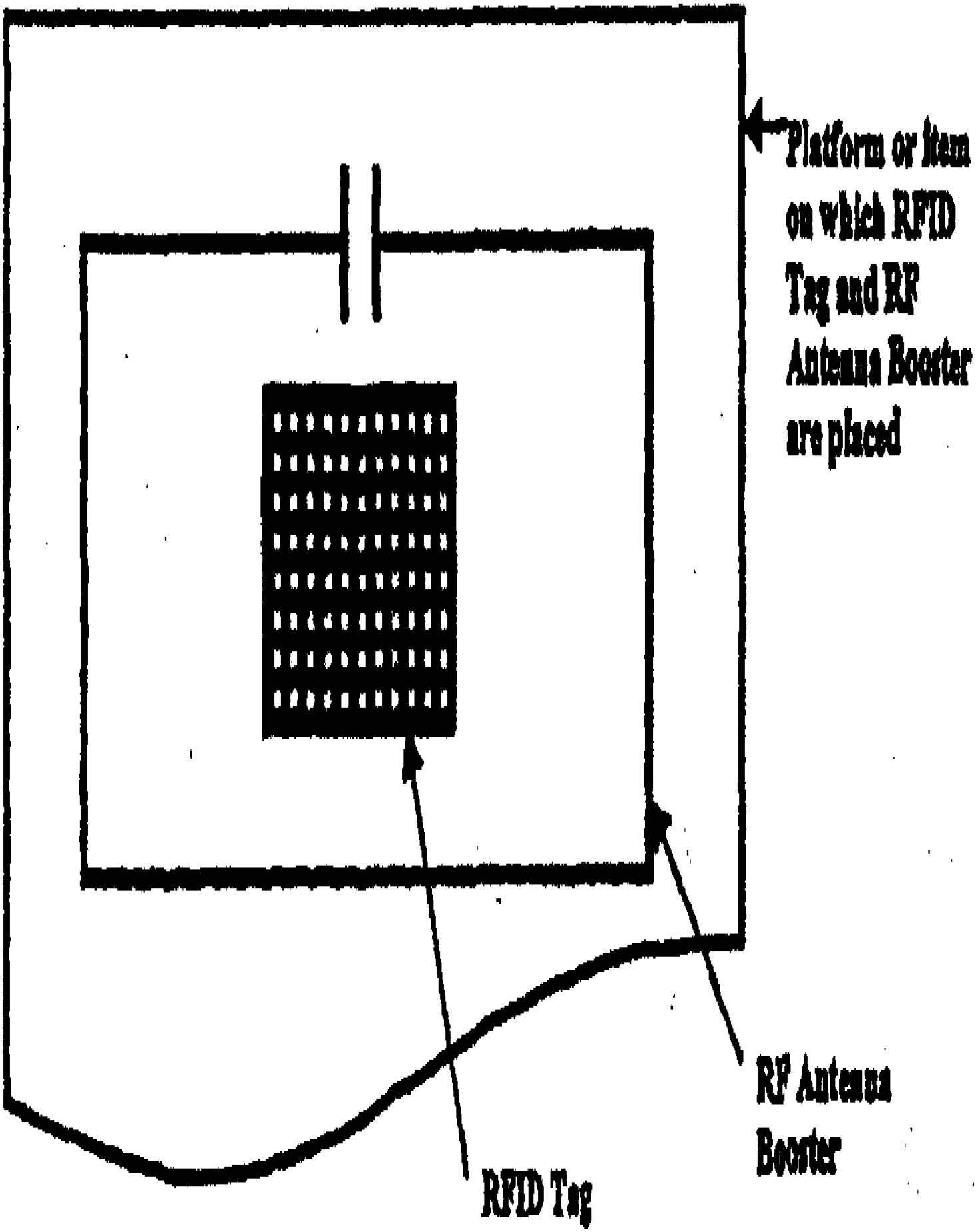
Platform or Item on which RFID Tag and RF Antenna Booster are placed
RF Antenna Booster
RFID Tag

DERWENT-ACC-NO: 2005-568809

DERWENT-WEEK: 200558

Copyright ©2013 Thomson Reuters

TITLE: Passive range extender/booster for radio frequency identification tag/reader, has passive closed loop inductance-capacitance tuned circuit to couple and amplify electro-magnetic field energy of RFID tag or RFID reader antenna

INVENTOR: HUI L P; KIN C S

PATENT-ASSIGNEE: TUNITY PTE LTD[TUNIN]

PRIORITY-DATA: 2002SG-003891 (June 28, 2002)

PATENT-FAMILY:

PUB-NO	PUB-DATE	LANGUAGE
SG 112842 A1	July 28, 2005	EN

APPLICATION-DATA:

PUB-NO	APPL-DESCRIPTOR	APPL-NO	APPL-DATE
SG 112842A1	N/A	2002SG-003891	June 28, 2002

INT-CL-CURRENT:

TYPE	IPC DATE
CIPS	G06K19/077 20060101
CIPS	H01Q5/01 20060101

ABSTRACTED-PUB-NO: SG 112842 A1

BASIC-ABSTRACT:

NOVELTY - The extender/booster has a passive closed loop inductance-capacitance (LC) tuned circuit of 13.56 MHz to couple and amplify the electro-magnetic field energy of the RFID tag or RFID reader antenna.

USE - For radio frequency identification tag/reader.

ADVANTAGE - Increases the read range of 13.56 MHz RFID tag.

DESCRIPTION OF DRAWING(S) - The figure shows a model of the passive range extender/booster.

CHOSEN-DRAWING: Dwg.1/1

TITLE-TERMS: PASSIVE RANGE EXTEND BOOST RADIO FREQUENCY IDENTIFY TAG READ CLOSE LOOP INDUCTANCE CAPACITANCE TUNE CIRCUIT COUPLE AMPLIFY ELECTRO MAGNETIC FIELD ENERGY ANTENNA

DERWENT-CLASS: T04 W02

EPI-CODES: T04-K02; W02-G05B;

SECONDARY-ACC-NO:

Non-CPI Secondary Accession Numbers: 2005-466293

(19) Europäisches Patentamt
European Patent Office
Office européen des brevets

(11) EP 1 524 010 A1

(12) EUROPEAN PATENT APPLICATION

(43) Date of publication:
20.04.2005 Bulletin 2005/16

(51) Int Cl.[7]: **A61N 1/372**, A61N 1/378, H04L 27/36

(21) Application number: **04256364.3**

(22) Date of filing: **15.10.2004**

(84) Designated Contracting States:
AT BE BG CH CY CZ DE DK EE ES FI FR GB GR HU IE IT LI LU MC NL PL PT RO SE SI SK TR
Designated Extension States:
AL HR LT LV MK

(30) Priority: **17.10.2003 US 512036 P**

(71) Applicant: **Alfred E. Mann Foundation for Scientific Research**
Santa Clarita, CA 91380-9005 (US)

(72) Inventors:
- **Gord, John C.**
  Venice, CA 90291 (US)
- **Arcos-Burgos, Maria Isabel**
  Valencia, CA 91354 (US)
- **Cosendai, Gregoire**
  Cudrefin 1588 (CH)

(74) Representative: **Paget, Hugh Charles Edward et al**
Mewburn Ellis LLP
York House
23 Kingsway
London WC2B 6HP (GB)

(54) Method and apparatus for efficient power/data transmission

(57) A system, method and power/data transmission device comprising a coil having a high Q, a low-voltage driver and a high-voltage driver switchably coupled to the coil. The low-voltage driver and the high-voltage driver are controlled by a microcontroller and switch at about the same time thereby providing a modulated data signal for transmission. Furthermore, the system includes at least one implantable microstimulator coupled to the transmission device.

EP 1 524 010 A1

Printed by Jouve, 75001 PARIS (FR)

BNSDOCID: <EP_____1524010A1_I_>

Description

[0001] This application claims the benefit of U.S. Provisional Application No. 60/512,036 filed on October 17, 2003.

Field of the Invention

[0002] The present invention is generally directed to an implantable medical device system, and more particularly to a method and apparatus for efficient modulation of data signals and power transmission to the implantable medical device.

Background of the Invention

[0003] Transmission of data or information signals is generally achieved through modulation of a carrier signal. The type of modulation, for example, may be amplitude modulation (AM), frequency modulation (FM), or phase modulation. Any of the foregoing modulations can be used depending on the application of the transmission.

[0004] A class of implantable medical devices known in the art are small microstimulators and/or sensors. These small microstimulators or sensors, which are hereafter referred to as BION™ devices, are described more fully in the following U.S. Patents: US Pat. No. 5,193,539, entitled " Implantable Microstimulator"; U.S. Pat. No. 5,193,540, entitled "Structure and Method of Manufacture of an Implantable Microstimulator"; U.S. Pat. No. 5,312,439 entitled "Implantable Device Having an Electrolytic Storage Electrode"; U.S. Pat. No. 6,164,284, entitled "System of implantable devices for monitoring and/or affecting body parameters"; U.S. Pat. No. 6,185,452, entitled "Battery-powered patient implantable device"; U.S. Pat. No. 6,208,894, entitled "System of implantable devices for monitoring and/or affecting body parameters "; U.S. Pat. No. 6,315,721, entitled "System of implantable devices for monitoring and/or affecting body parameters"; 6,564,807, entitled "System of implantable devices for monitoring and/or affecting body parameters, each of which patents are incorporated herein by reference. These BION devices are generally small enough to be implanted in a minimally invasive manner through a lumen of a needle, or a similar sized cannula. These BION devices or microstimulators when implanted can provide the appropriate electrical stimulation to the appropriate nerves or muscles in order to rehabilitate or contribute to the functionality of the intended body parts.

[0005] Communication with the microstimulators is achieved through a wireless medium. This communication can be through an electromagnetic or RF link or magnetic/inductive coupling of an external device with the microstimulators. In the case of the inductive coupling the external device generally referred to as a BION control unit (BCU) comprises a charger and a controller wherein the functionality of the charger and the controller may be combined and provided through a multi-turn loop antenna in the form of a single coil. This BCU coil is in turn coupled with the coil in the microstimulator providing the inductive coupling and transmission of power and modulated signal to the microstimulator. The communication between the BCU and the BION is through digital communication or pulse modulation of the carrier signal. It has been realized that the sharpness (rise time and/or fall time) of the square wave digital signal can have a direct effect on the communication and the ability of the BION device to properly receive and decode the modulated digital signal. Although a high power modulation amplifier may be used to overcome the problem associated with the low rise time and fall time of a digital square wave pulse modulated signal, however, this would not be compatible with the low power requirements of an implantable microstimulator. It has been further realized that when utilizing a single coil for the transmission of power and modulated signal to microstimulator the use of a high Q coil provides an optimal transmission of power to the microstimulator. However, the use of a high Q coil will adversely affect the modulation signal in that the rise time and the fall time of the signal will be very slow, therefore resulting in an unreliable reception of the modulated signal by the microstimulator. Thus there is a need in the art for an apparatus that comprises a high Q coil and also provides reliable modulation wherein the rise time and the fall time of the modulation signal are adequate for the proper reception by the microstimulator.

Brief Description of the Drawings

[0006]

FIG. 1 is an illustration of a functional block diagram of an implantable microstimulator system in accordance with the present invention.

FIG. 2 is an illustration of the slow rise and fall times associated with modulated data signals when utilizing a high-Q coil for transmission of both power and data to the microstimulator.

FIG. 3 is an illustration of a block diagram representation of the control unit and the external coil in accordance with the present invention.

FIG. 4 is an illustration of a high-level schematic representation of the control unit and the external coil in accordance with the present invention.

FIG. 5 is an illustration of a detailed schematic representation of the control unit and the external coil in accordance with the present invention.

FIG. 6 is an illustration of the waveforms associated

BNSDOCID: <EP_____1524010A1_I_>

InductEV, Inc.
Exhibit 1031
Page 363

with the voltages of the low-voltage driver and the high-voltage driver, and their corresponding modulation of the external coil current in accordance to the principle of the present invention.

[0007] Corresponding numerals indicate corresponding elements throughout the several views of the drawings.

Detailed Description of the Preferred Embodiments

[0008] The following description is of the best mode presently contemplated for carrying out the invention. This description is not to be taken in a limiting sense, but is made merely for the purpose of describing the general principles of the invention. The scope of the invention should be determined with reference to the claims.

[0009] A functional block diagram of an implantable microstimulator/medical device system is illustrated in FIG. 1 in accordance with an embodiment of the present invention. As shown, a control unit 10 is positioned external to the skin of a patient and at least one microstimulator 20 in the form of a BION-type device is provided subcutaneously in the patient's body. The BION devices are approximately less than 6 mm in lateral dimension and less than 60 mm in longitudinal dimension. In the embodiment of the present invention, it is contemplated that the BION devices are less than 2.5 mm in lateral dimension and less than 16 mm in longitudinal dimension. The control unit 10 generally referred to as BION Control Unit (BCU) provides the power and data signals to the microstimulator 20 through a mufti-turn loop antenna generally referred to as the external coil 12. In the embodiment of the present invention, the external coil 12 is a high-Q-type coil with low equivalent series resistance. The external coil 12 is made of LITZ wire or any other type of wire known in the art that can provide the high-Q characteristic required for efficient power transmission in an inductively-coupled system. The LITZ wire is characterized as having about 150 strands of 44 gauge electrically conductive wire encased in a silk sheath. One of the design constraints that must be considered when using an implantable device system as shown in FIG. 1 is the efficient transfer of energy to the microstimulator 20. in general, the efficient transfer of energy through an external coil 12 to an internal coil 14 requires the use of a high Q resonant circuit to couple the two coils. A resonant circuit may be described as one containing both inductance (L) and capacitance (C) in which the capacitive reactance is equal to the inductive reactance. This condition occurs at only one frequency in a circuit with fixed constants, and the circuit is said to be "tuned" to this frequency. The "Q" of a resonant circuit may be defined as a figure of merit of the tuned LC circuit, where Q is generally equal to X/R, where X is the reactance of the circuit, and R is the resistance. Because the resistance in a resonant circuit typically represents an energy loss (the loss occurring due to ohmic heating), a more efficient energy transfer occurs when the resistance is low, or the Q is high. Hence, a preferred circuit for coupling energy between a primary coil and an implanted coil will utilize a resonant circuit having a relatively high Q, e.g., a Q greater than or equal to 10. A Q value of twenty or higher is preferred.

[0010] When a high Q circuit is used to couple energy between an external coil and an internal coil, the high Q properties of the circuit make it difficult to perform rapid modulation of the carrier signal. Hence, any data modulation signal that also must pass through the high Q resonant circuit tends to exhibit very slow rise and fall times. Disadvantageously, in the context of an implanted medical device system, the integrity of the data transmission (i.e., the ability of the system to reliably detect the data that is transmitted) is significantly adversely affected in proportion to the slowness of the rise and fall times of the modulated data signal.

[0011] FIG. 2 is an illustration of the contrast between the slow rise and fall times waveform associated with modulated data signals utilizing a high-Q coil for transmission of both power and data to the microstimulator and the proper/desired square waveform for transmission of the data signals. The high-Q coil is highly efficient in transmitting power to the internal coil; however, it is inefficient with respect to the modulation of a data signal for transmission, namely, the higher Q of coil results in the slow rise and fall time of the modulated signal. This in turn adversely affects the sharpness of the modulated data signal which can result in the unreliability of received data signal by the microstimulator 20.

[0012] In the present invention, it is contemplated that Manchester encoding may be used to assure reliability. In such encoding, there is always a transition, from high to low or vice versa, at the end of sixteen cycles, which is the bit time. If there is a transition at 8 cycles, the state time, the bit may be termed a "1". If there is no transition at 8 cycles, the bit is then a "0". The Manchester encoding is further discussed in U. S. Patent No. 5,193, 539 which is incorporated herein by reference. The preferred signal modulation in the embodiment of the present invention is amplitude modulation; however, other types of signal modulations can be implemented for various applications.

[0013] FIG. 3 is an illustration of a block diagram representation of the control unit and the external coil in accordance with the present invention. The control unit 10 includes a high-voltage driver 16, a low-voltage driver 18, an auto-tuning circuit 22, and a tuning/adjustable capacitor 24. The auto-tuning circuit 22, for example, can be implemented in the form described in pending Patent Application Serial No. 10/429,427 filed on May 5, 2003, titled: " System and Method for Automatic Tuning of a Magnetic Field Generator" which is incorporated herein by reference. In the embodiment of the present invention, the auto-tuning circuit 22, tuning/adjustable capacitor 24 and the external coil 12 form a tuned circuit which

BNSDOCID: <EP_____1524010A1_I_>

InductEV, Inc.
Exhibit 1031
Page 364

is preferably set at 2 MHz of resonant frequency; however, other resonant frequency values may be used depending on the carrier frequency utilized for power transmission. It should be noted that the low equivalent series resistance of the external coil 12 is the resistance that is less than 1/Q times the reactance of the coil at 2 MHz. For example, for a coil of 40 microHenries, the reactance ($2.\pi.f.\ell$) is about 500 ohms so a coil equivalent series resistance of well less than 5 ohms is appropriate if the desired overall Q is 100. In this example, the equivalent series resistance of less than 5 ohms is desired in order to allow for the other resistances in the circuit such as the impedance of the low and high voltage drivers. The control unit 10 is connected to the external coil 12. The high voltage driver 16 and the low-voltage driver 18 through the tuning capacitor 24 drive the external coil 12.

[0014] Traditionally, only a single voltage-driver has been utilized to drive a coil in an inductively-coupled transmission system, especially in an implantable medical device system. As described above, when a high-Q coil is used for both power and data transmission, the modulation of the carrier signal for data signal transmission is adversely affected. The present invention provides a control unit driving a high-Q external coil with a low-voltage and a high-voltage driver concurrently. This arrangement provides for a more reliable modulation of the carrier signal by providing sharp rise times and fall times in square wave data signals.

[0015] FIG. 4 is an illustration of a high-level schematic representation of the control unit and the external coil in accordance with the present invention. The low-voltage driver 18 is connected to an auto-tuned circuit broadly represented as adjustable capacitor 24. The low-voltage driver 18 generally includes a switching circuit 26 having at least one switch-mode transistor having a low internal impedance represented by the resistor 28. The adjustable capacitor 24 is controlled by an auto-tuning circuit (not shown). The high-voltage driver 16 generally includes a switching circuit 29 also of a switch-mode transistor type with low impedance that provides the high-voltage input to the external coil 12. As shown in FIG. 4, the external coil 12 includes a parasitic capacitance and resistance. In the embodiment of the present invention, the high-Q external coil 12 has low parasitic capacitance and resistance. The value of the low parasitic capacitance is dependent on the value of the carrier frequency and should be a capacitance that results in a self-resonant frequency well above the carrier frequency. The switching circuits 26 and 29 may be switch-mode transistors or any other switching elements known to those skilled in the art.

[0016] FIG. 5 is an illustration of a detailed schematic representation of the control unit and the external coil in accordance with the present invention. Referring to FIG. 5, the low-voltage driver 18 provides a change in voltage between approximately 10 volts to the ground and approximately 9 volts to the ground. For example, the Vcc in the circuitry of the low-voltage driver is set at 10 volts. When the switch circuit 30 is closed and the switch circuit 32 is open, then the voltage at the output 36 would be at about 10 volts. In contrast, when the switch circuit 30 is open and the switch circuit 32 is closed, then the output voltage at the output 36 would be at about 9 volts. This transition between 10 volts and 9 volts provides the low-voltage driver modulation to the external coil. The output of the low-voltage modulation is provided to the external coil through the adjustable capacitor 24 which is controlled by the auto-tuning circuit. It should be noted that the tuning of the adjustable capacitor to the external coil may be achieved as described above or through various techniques known to those skilled in the relevant art.

[0017] Furthermore, referring to FIG. 5, another advantage of an embodiment of the present invention is achieved wherein the high-voltage driver 16 derives power from a voltage-controlled source 38 which in turn taps off ,i.e., is connected to, the transmit resonant circuit. The transmit resonant circuit in the embodiment of the present invention is essentially the combination of the low-voltage driver impedance 28, the adjustable capacitor 24, the external coil 12 including its inductance, parasitic capacitance and parasitic resistance, and the high-voltage driver impedance. The voltage-controlled source 38 is broadly comprised of a capacitor-voltage-division circuitry with the arrangement shown in FIG. 5. It should be noted that the voltage supplied to the high-voltage driver 16 by the voltage-controlled source 38 is dependent on and changes as the impedance of the external coil and hence the Q of the coil changes. The impedance of the external coil changes as the external coil is flexed in various shapes when placed on or near a patient's body. The high-voltage driver provides a proportionately high voltage to the coil based on the Q value of the transmit resonant circuit. For example, if the Q of the external coil is 100, when the external coil is in certain position, and the output voltage of the low-voltage driver is 10 volts, then the voltage at node 37 would be 10xQ = 1000 volts. According to the embodiment of the present invention, the modulation provided by the low-voltage driver is about 1 volt which is the difference between the 10 volts and the 9 volts resulting from switching of the switches 30 and 32 (as described above). The 1 volt modulation is 10% modulation of the 10 volts signal of the low-voltage driver 18. Since the high-voltage driver 16 should provide a modulation level corresponding to and concurrently with the modulation provided by the low-voltage driver 18, then the modulation level by the high-voltage driver 16 should also be 10% of the voltage value at node 37. Therefore, in the embodiment of the present invention, the controlled-voltage source 38 provides a voltage division of 10% of the available voltage at node 37 and such that the voltage supplied to the high-voltage driver 16 would be 100 volts. Hence, the high-voltage driver 16 would provide a modulation between 0 volts and 100 volts which is 10% of the voltage

BNSDOCID: <EP_____1524010A1_I_>

InductEV, Inc.
Exhibit 1031
Page 365

supplied as a result of the Q=100 of the transmit resonant circuit. As can be realized from the foregoing example, the voltage supplied by the controlled-voltage source 38 changes with and is dependent on the impedance of the external coil 12 and in turn the Q value of the external coil/transmit resonant circuit. This voltage control of the high-voltage driver insures that the modulation level by the high-voltage driver 16 is appropriate and minimizes transmission error of the modulated data signal. It must be noted that the microcontroller 40 enables the synchronization of the switching of the low-voltage driver 18 and the high-voltage driver 16 in order to provide the proper modulation of the carrier signal. In order to achieve an efficient modulation of the carrier signal, the low-voltage driver and the high-voltage driver should be switched at or near the zero-crossing of the AC coil current.

[0018] FIG. 6 is an illustration of the waveforms associated with the voltages of the low-voltage driver and the high-voltage driver, and their corresponding modulation of the external coil current in accordance to the principle of the present invention. As shown in FIG. 6, the voltage at the output of the low-voltage driver (VL) is provided at the carrier frequency of about 2 MHz. In contrast, the voltage at the output of the high-voltage driver (VH) is provided at a lower frequency corresponding to the modulation frequency of about 125KHz. According to an embodiment of the present invention, it is contemplated that the high-voltage driver switches at about the same time as one of the switching edges of the low-voltage driver voltage signal. This is accomplished by the microcontroller 40 synchronizing the switching operation of the high-voltage driver and the low-voltage driver such that the high-voltage driver, when modulating, switches at about the same time as one of the switching edges of the low-voltage driver voltage signal. As a result of the foregoing technique, the current through the external coil (Icoil) is accordingly modulated. For example, VL changes from 9 volts to 10 volts (as shown by the edge 602) and at about the same time VH changes from 0 volt to 100 volts (as shown by the edge 604) causing the modulation of the Icoil by a corresponding increase of 10% change in the amplitude of the external coil current. Similarly, at the edge 606, VL changes from 10 volts to 9 volts and VH at about the same time changes to 0 volts causing a corresponding decrease of 10% change in the amplitude of the external coil current.

[0019] While the invention has been described by means of specific embodiments and applications thereof, it is understood that numerous modifications and variations could be made thereto by those skilled in the art without departing from the spirit and scope of the invention. It is therefore to be understood that within the scope of the claims, the invention may be practiced otherwise than as specifically described herein.

Claims

1. A power/data transmission device, comprising:

   a coil having a high Q;
   a low-voltage driver switchably coupled to the coil; and
   a high-voltage driver switchably coupled to the coil.

2. The power/data transmission device of claim 1, wherein the coil has a low parasitic capacitance.

3. The power/data transmission device of claim 2, wherein the coil is a LITZ wire.

4. The power/data transmission device of claim 3, wherein the low-voltage driver and the high-voltage driver provide a modulated data signal through the coil for transmission to a receiving device.

5. The power/data transmission device of claim 4, wherein the coil is provided with a carrier frequency of about 2 MHz.

6. The power/data transmission device of claim 5, wherein the low-voltage driver comprises:

   at least one switched-mode transistor for providing the modulated data signal and wherein the at least one switched-mode transistor has low impedance.

7. The power/data transmission device of claim 6, wherein the high-voltage driver comprises:

   at least one switched-mode transistor for providing the modulated data signal and wherein the at least one switched-mode transistor has low impedance.

8. The power/data transmission device of claim 7, wherein the low-voltage driver and the high-voltage driver are synchronized to produce the modulated data signal.

9. The power/data transmission device of claim 8, wherein the data signal is amplitude-modulated.

10. The power/data transmission device of claim 7, wherein the high-voltage driver receives power from a transmit resonant circuit.

11. A method of power/data transmission, comprising:

    providing a high Q coil;
    providing a low-voltage driver switchably coupled to the coil;

BNSDOCID: <EP_____1524010A1_I_>

InductEV, Inc.
Exhibit 1031
Page 366

providing a high-voltage driver switchably coupled to the coil; and

modulating a carier signal with data using the low-voltage and the high-voltage driver.

12. The method of claim 11, wherein the modulating comprises:

switching the low-voltage driver and the high-voltage driver coupled to the coil, thereby modulating the carrier signal.

13. The method of claim 12, wherein the modulating comprises:

synchronizing the switching of the low-voltage driver and the high-voltage driver coupled to the coil, thereby producing a data signal.

14. The method of claim 13, wherein the carrier frequency is at about 2 MHz.

15. The method of claim 13, further comprising:

amplitude modulating the data signal.

16. An implantable medical device system comprising:

at least one implantable microstimulator;
a transmission device comprising:

a high-voltage driver switchably coupled to the coil.
a coil having a high Q; and
a low-voltage driver switchably coupled to the coil.

17. The implantable medical device system of claim 16, wherein the at least one microstimulator is less than 60 mm in longitudinal and less than 6 mm in lateral dimension.

BNSDOCID: <EP_____1524010A1_I_>

InductEV, Inc.
Exhibit 1031
Page 367

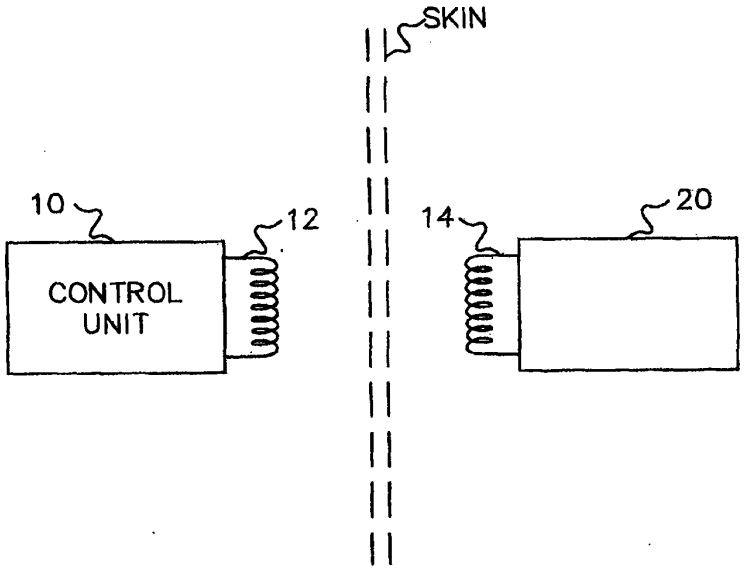

FIG. 1

BNSDOCID: <EP_____1524010A1_I_>

InductEV, Inc.
Exhibit 1031
Page 368

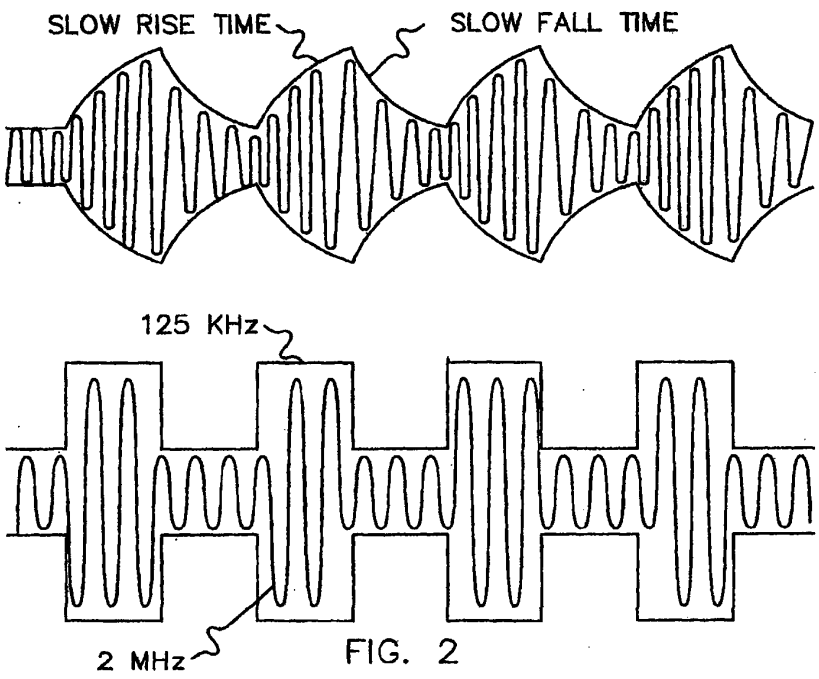

FIG. 2

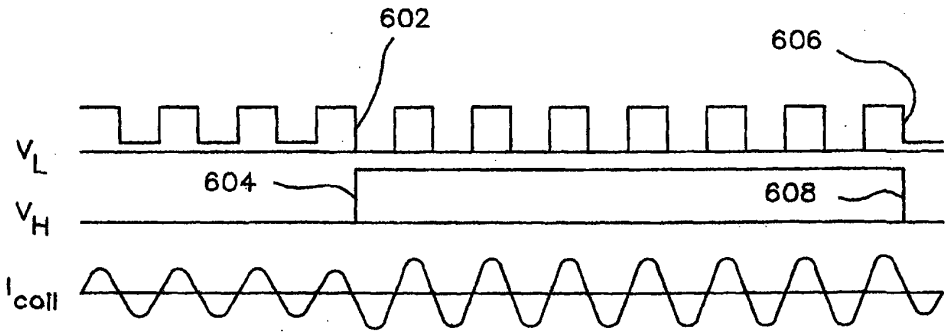

FIG. 6

BNSDOCID: <EP_____1524010A1_I_>

InductEV, Inc.
Exhibit 1031
Page 369

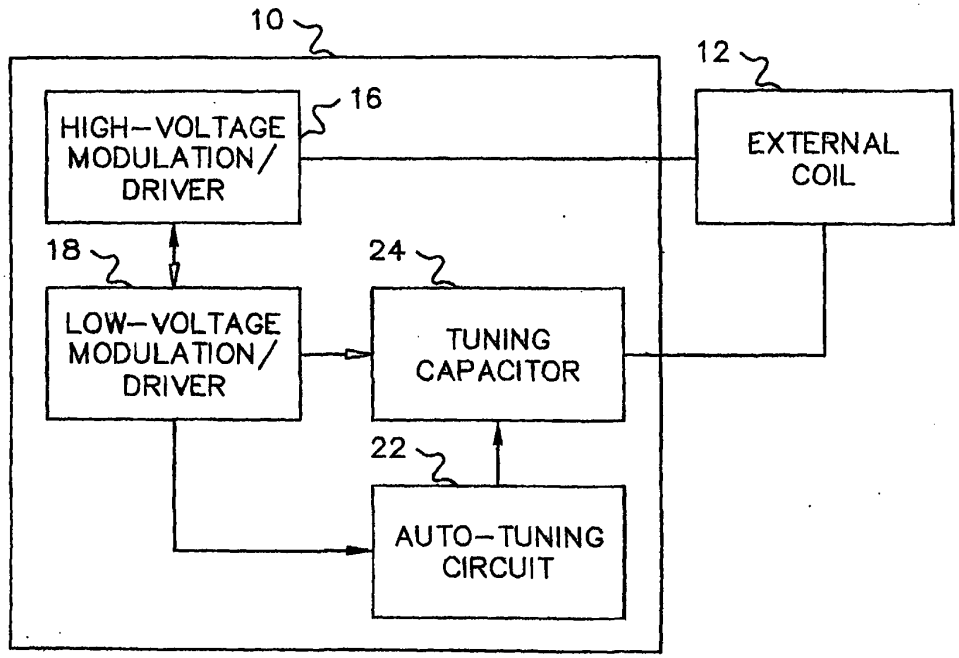

FIG. 3

BNSDOCID: <EP_____1524010A1_I_>

InductEV, Inc.
Exhibit 1031
Page 370

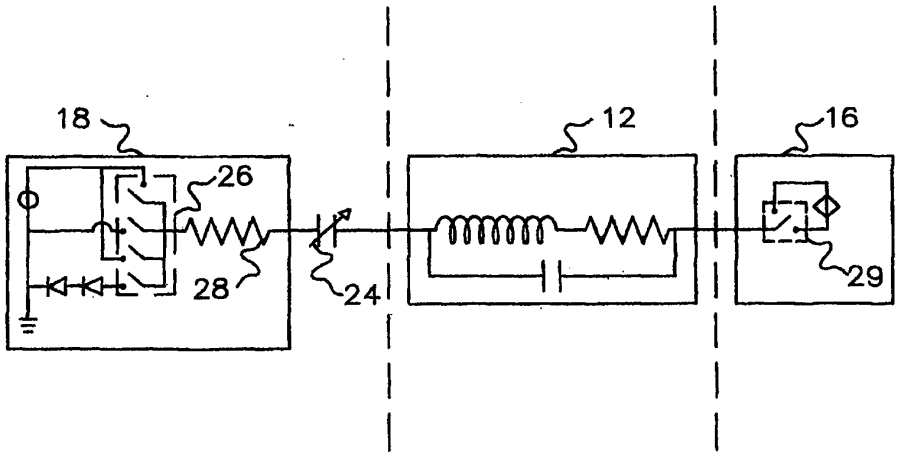

FIG. 4

BNSDOCID: <EP_____1524010A1_I_>

InductEV, Inc.
Exhibit 1031
Page 371

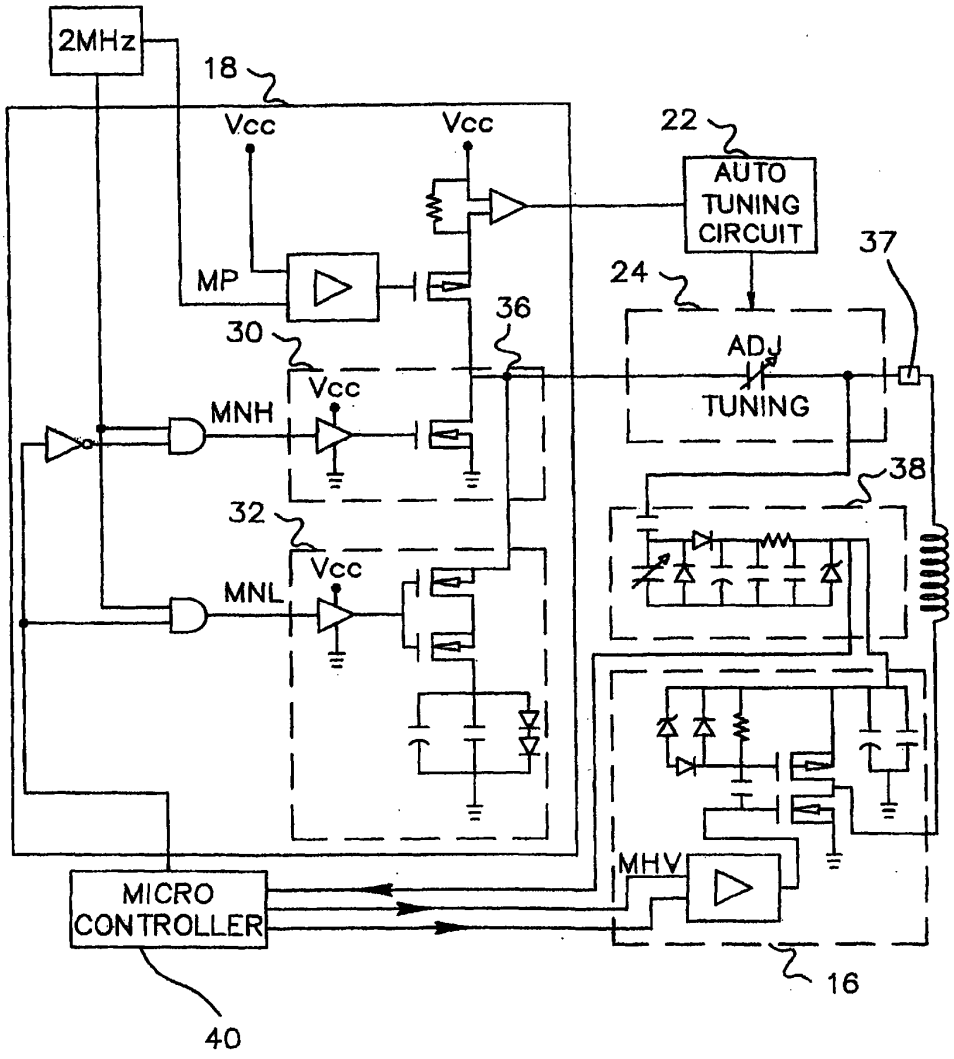

FIG. 5

BNSDOCID: <EP_____1524010A1_I_>

InductEV, Inc.
Exhibit 1031
Page 372

European Patent Office

EUROPEAN SEARCH REPORT

Application Number
EP 04 25 6364

DOCUMENTS CONSIDERED TO BE RELEVANT

Category	Citation of document with indication, where appropriate, of relevant passages	Relevant to claim	CLASSIFICATION OF THE APPLICATION (Int.Cl.7)
X	EP 0 417 634 A (SIEMENS ELEMA AB; SIEMENS AKTIENGESELLSCHAFT BERLIN UND MUENCHEN) 20 March 1991 (1991-03-20) * abstract; figures 1,2 * * page 3, line 15 - page 5, line 56 *	1,2,4, 6-13,15	A61N1/372 A61N1/378 H04L27/36
Y		3,5,14, 16,17	
Y	US 5 193 540 A (SCHULMAN ET AL) 16 March 1993 (1993-03-16) * abstract * * column 3, line 62 - column 4, line 13 *	3,5,14, 16,17	
A	EP 1 252 911 A (PACESETTER, INC) 30 October 2002 (2002-10-30) * the whole document *	1-17	

TECHNICAL FIELDS SEARCHED (Int.Cl.7)

A61N
H04L

The present search report has been drawn up for all claims

Place of search	Date of completion of the search	Examiner
Munich	16 February 2005	Wetzig, T

CATEGORY OF CITED DOCUMENTS

X : particularly relevant if taken alone
Y : particularly relevant if combined with another document of the same category
A : technological background
O : non-written disclosure
P : intermediate document

T : theory or principle underlying the invention
E : earlier patent document, but published on, or after the filing date
D : document cited in the application
L : document cited for other reasons

& : member of the same patent family, corresponding document

EPO FORM 1503 03.82 (P04C01)

BNSDOCID: <EP_____1524010A1_I_>

InductEV, Inc.
Exhibit 1031
Page 373

ANNEX TO THE EUROPEAN SEARCH REPORT ON EUROPEAN PATENT APPLICATION NO. EP 04 25 6364

This annex lists the patent family members relating to the patent documents cited in the above-mentioned European search report. The members are as contained in the European Patent Office EDP file on
The European Patent Office is in no way liable for these particulars which are merely given for the purpose of information.

16-02-2005

Patent document cited in search report	Publication date	Patent family member(s)	Publication date
EP 0417634 A	20-03-1991	US 5170414 A	08-12-1992
		EP 0417634 A2	20-03-1991
US 5193540 A	16-03-1993	US 5405367 A	11-04-1995
		US 5358514 A	25-10-1994
EP 1252911 A	30-10-2002	US 2002183799 A1	05-12-2002
		EP 1252911 A2	30-10-2002

EPO FORM P0459

For more details about this annex : see Official Journal of the European Patent Office, No. 12/82

BNSDOCID: <EP_____1524010A1_I_>

InductEV, Inc.
Exhibit 1031
Page 374

(12) INTERNATIONAL APPLICATION PUBLISHED UNDER THE PATENT COOPERATION TREATY (PCT)

CORRECTED VERSION

(19) World Intellectual Property Organization
International Bureau

(43) International Publication Date
19 February 2004 (19.02.2004)

PCT

(10) International Publication Number
WO 2004/015885 A1

(51) International Patent Classification[7]: H04B 5/00, H02J 5/00, 17/00

(21) International Application Number: PCT/US2003/025148

(22) International Filing Date: 12 August 2003 (12.08.2003)

(25) Filing Language: English

(26) Publication Language: English

(30) Priority Data:
60/403,223 12 August 2002 (12.08.2002) US
60/403,069 12 August 2002 (12.08.2002) US

(71) Applicant *(for all designated States except US)*: **MOBILEWISE, INC.** [US/US]; 5150 El Camino Real, Suite B30, Los Altos, CA 94022 (US).

(72) Inventors; and
(75) Inventors/Applicants *(for US only)*: **DAYAN, Tal** [US/US]; 14400 Blossom Hill Road, Los Gatos, CA 95032 (US). **GOREN, Ofer** [US/US]; 1891 Channing Avenue, Palo Alto, CA 94303 (US). **KIKINIS, Dan** [CH/US]; 20264 Ljepava Drive, Saratoga, CA 95070 (US). **GOREN, Yehuda** [US/US]; 260 Berry Court 11, Palo Alto, CA 94304 (US).

(74) Agents: **MALLIE, Michael, J.** et al.; Blakely, Sokoloff, Taylor & Zafman LLP, 12400 Wilshire Boulevard, 7th Floor, Los Angeles, CA 90025 (US).

(81) Designated States *(national)*: AE, AG, AL, AM, AT, AU, AZ, BA, BB, BG, BR, BY, BZ, CA, CH, CN, CO, CR, CU, CZ, DE, DK, DM, DZ, EC, EE, ES, FI, GB, GD, GE, GH, GM, HR, HU, ID, IL, IN, IS, JP, KE, KG, KP, KR, KZ, LC, LK, LR, LS, LT, LU, LV, MA, MD, MG, MK, MN, MW, MX, MZ, NO, NZ, OM, PH, PL, PT, RO, RU, SD, SE, SG, SK, SL, TJ, TM, TN, TR, TT, TZ, UA, UG, US, UZ, VN, YU, ZA, ZM, ZW.

(84) Designated States *(regional)*: ARIPO patent (GH, GM, KE, LS, MW, MZ, SD, SL, SZ, TZ, UG, ZM, ZW), Eurasian patent (AM, AZ, BY, KG, KZ, MD, RU, TJ, TM), European patent (AT, BE, BG, CH, CY, CZ, DE, DK, EE,

[Continued on next page]

(54) Title: WIRELESS POWER SUPPLY SYSTEM FOR SMALL DEVICES

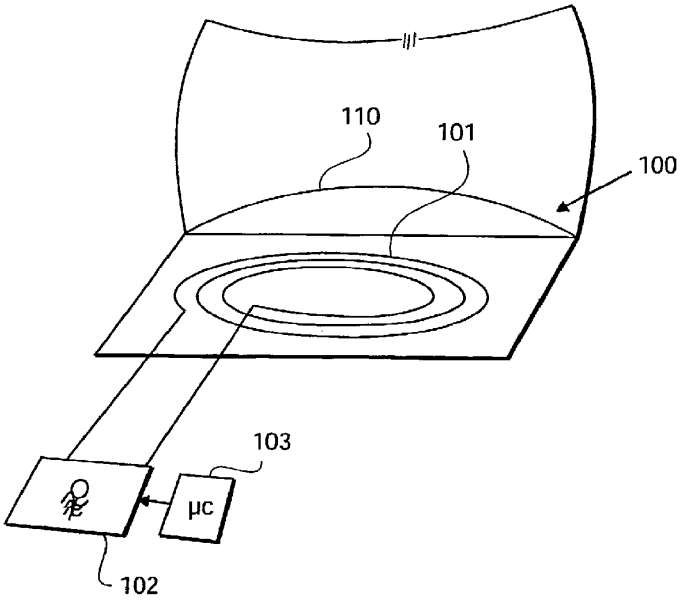

(57) Abstract: An apparatus to provide wireless powering of a mobile device comprising a pad (100) having an embedded coil (101), the coil driven (101) by a power oscillator (102) and is controlled by a controller (103), to provide a narrow-band resonance coupling.

WO 2004/015885 A1

ES, FI, FR, GB, GR, HU, IE, IT, LU, MC, NL, PT, RO, SE, SI, SK, TR), OAPI patent (BF, BJ, CF, CG, CI, CM, GA, GN, GQ, GW, ML, MR, NE, SN, TD, TG).

Published:
— *with international search report*

(48) Date of publication of this corrected version:
13 January 2005

(15) Information about Correction:
see PCT Gazette No. 02/2005 of 13 January 2005, Section II

For two-letter codes and other abbreviations, refer to the "Guidance Notes on Codes and Abbreviations" appearing at the beginning of each regular issue of the PCT Gazette.

WIRELESS POWER SUPPLY SYSTEM FOR SMALL DEVICES

Background

This application claim priority to, and incorporates by reference its provisional application no. 60/403,223 filed 08/12/2002 titled "Enhanced RF Wireless Adaptive Power Provisioning System For Small Devices" (Attorney Docket No. 6041.P006z), and related provisional application no. 60/403,069 filed 08/12/2002 titled "Enhanced RF Wireless Adaptive Power Provisioning System" (Attorney Docket No. 6041.P007z). This application incorporates by reference co-pending patent application titled "Alternative Wirefree Mobile Device Power Supply Method and System With Free Positioning" filed 08/01/2002, application number 10/211,224, Attorney Docket No. 6041.P005.

One other approach for wireless powering of small mobile devices is using inductive coupling. Although mentioned in the co-pending application, it is a tricky approach. Leakage is the biggest problem, but load matching, inducing eddy currents in untargeted objects and hence heating them, or shorting the supply are just a few to mention.

What is clearly needed is a method and system to improve the yield by doing a finely tuned microprocessor-controlled, narrow-band resonance coupling, hence improving the coupling to almost no loss in the near field, and at the same time keeping the far field virtually zero.

Brief Description of the Drawings

Fig. 1 illustrates a pad in which a coil is embedded in accordance with one embodiment.

Fig. 2 illustrates a notebook in which a coil is attached to the bottom in accordance with one embodiment.

Fig. 3 illustrates a schematic overview of electrical circuitry of a system in accordance with one embodiment.

Fig. 4 illustrates an additional schematic overview of electrical circuitry of a system in accordance with one embodiment.

Fig. 5 illustrates an implementation of one embodiment.

Fig. 6 illustrates an overview diagram of the network connectivity in accordance

InductEV, Inc.
Exhibit 1031
Page 377

with one embodiment.

Fig. 7 illustrates flow diagram of the process in accordance with one embodiment.

Description of the Embodiment

Figure 1 shows a pad 100 in which a coil 101 is embedded. The coil is driven by a power oscillator 102 (power source not shown) and is controlled by intelligent controller 103, which may contain a microcontroller. Also shown is the near field 110 and the far field 111, which are available. The near field is defined typically as the field within the geometry size of the coil itself (i.e., if the coil is 5 inches in diameter, the near field would be that order of magnitude, whereas a point 50 inches away would be considered in the far field), while the far field is typically defined as the field seen from a distance of a multiple of the geometry of the device. Typically measurements for EMI are done at a distance of approximately 5 meters or more from the device, and actually they are mostly measuring the far field, whereas near field sniffer ports are used only for determining potential leaks, etc.

Figure 2 shows a notebook computer 200 with a coil 201 attached to its bottom. Also attached is an RF-to-dc converter 202 and a dc plug 203 that is connected to converter 202 and plugged into a normal dc power supply pin of the notebook. It is clear that in some cases, the receiving system consisting of coil, RF/dc converter, etc., may be integrated into the host and not require an external supply connector. In some cases the RF-to-dc converter is an intelligent-type regulator, in other cases, it may be simply a basic diode/capacitor rectifying system or any type in between. As described earlier in co-pending patent application number 10/211,224, Attorney Docket No. 6041.P005, an array of coils can be used to improve coupling by always allowing a "reasonable" set of inductors/antennae to be found between the base and the device. A normal type of MOSFET can be used to switch, using a small dc bias to enable switching and sending the RF energy on top.

Figure 3 shows a schematic overview of the electrical circuitry of the system. Power generator 102 drives the inductor coil 101 in the pad. In some cases, the inductor may not be an actual coil, but rather an antenna with microwave strips, etc., depending on the frequency selected. In yet other cases, it may be integrated into a PCB, etc. Typically, such a device would operate in either the 900 megahertz or in the 2.4

InductEV, Inc.
Exhibit 1031
Page 378

gigahertz range, but almost always in an industrial, scientific and medical (ISM) band, so slight leakage in the far field would be deemed acceptable. In one case, a 13.5 MHz ISM band is used, with a plurality of coils embedded in the base unit. That frequency (also an ISM band) lends itself nicely, since it is high enough to not require expensive ferrite cores, but is low enough to provide high power with little skin effect. Trying to reduce skin effect could dramatically increase the cost of the coils. The switches used in a matrix, as described above, should have a transit frequency of at least 5x the primary carrier (i.e., Ft =100 MHz > 5*13.5 = 67.5 MHz), which are still economically feasible.

Regulator 103 shows more detail. In particular, it measures the power sent into the coil 101 by the means of sensing across the voltage wires and measuring at sense resistor 104 to determine how much power is actually drawn. The results would then be used by regulator 103 (i.e., a microprocessor, not shown) to drive the controls of the oscillator 102. These controls may include one or more of the frequency, frequency spread (that is, the bandwidth), and total power pushed into the inductor (or transmitting antenna) 101.

The recipient antenna or inductor 201 forms, with capacitor 201a (previously not shown), a resonance receiving antenna system that is narrowly tuned. The higher the Q (quality quotient of the resonance circuit), the narrower the band it draws power on, and the better the coupling between the two, even if the mechanical situation is not ideal. Converter 202 is the ac or RF-to-dc converter, shown here with a bridge rectifier capacitor, an electronic regulator block, and another filter capacitor before going to dc connector 203.

The quality of this circuitry may depend a lot on the Q, but also on the capability to control multiple loads. In some cases, a regulator may be contained in the host device, such that communication received in the host side regulator could include, for example, FM-modulated, AM-modulated, or other data that runs on the same carrier (frequency) that is carrying power, and such data can be introduced by controller 103 by modulating the center frequency of oscillator 102, or other appropriate means to achieve the desired type of modulation (not shown).

Figure 4 shows a further simplified circuitry with the oscillator 102, the intelligent controller 103, the sensing resistor 104, and a load resistor 401 that represents the equivalent power load that is "seen" from the oscillator, in the case of an ideal resonant coupling of both coils and or antennae.. The reactive component of Z_L , which can be

InductEV, Inc.
Exhibit 1031
Page 379

determined by regulator/controller 103' using its sense lines over Sense Resistor 104 (R_S) lets regulator 103' determine coupling and transmission (transformation) ratio, of the actual situation, allowing a crude first regulation that compensates for the transformation ratio between inductors. Further, the communication link allows fine tuning by communicating between both sides. The back pass of the communication may be done by modulating the load signal, resulting in a specific pattern at the gross regulator on the primary side.

It is clear that by managing the power regulation on the receiving side, the semblance of Z_L may be tweaked. It is also clear that by controlling multiple devices and communicating among said devices, an overload of the circuitry, for example, may be avoided, in case too many devices try to share one pad. A signal could be sent that allows only certain devices to participate, with others being told to delay charging. In yet other cases, the frequency of resonance of different devices may be slightly skewed, thus allowing multiplexing of power distribution by not tightly coupling all devices at the same time. Such an approach would be suitable for the times when greater amounts of power are needed in one or another device, because only certain devices would receive energy at a given time, depending on their resonances. Multiplexing could be done by frequency hopping on the oscillator side, or by other means, such as communicating and telling power regulators to back off.

Figure 5 shows a table 501 in a coffee shop 500 that has, for example, four sections 502 a-d. On one of the sections (section 502b) the user has installed himself by setting down his notebook 505, his cell phone 506, and half a cup of cappuccino 510.

Figure 6 is an overview diagram of the network connectivity required. In this example, only cell phone 506 is shown, sitting on table section 502b; however, it is clear that more than one device may be connected at one time. Table section 502b is connected to intelligent controller 601, which has access to a power source 603 and also access to network 604, typically going through a router/firewall device 605 and Internet connection 611 to the Internet 610, from where a connection 612 leads to a server 620 that maintains the user's account.

According to the user's preferences an account has been set up on the server that describes the features of the account, such as power, networking, etc., and the means of payment, for example, by time and/or actual power usage and/or megabytes of data

InductEV, Inc.
Exhibit 1031
Page 380

uploaded or downloaded. All this data for each account is on file in a database (not shown) on the server.

The account services may be charged as a flat monthly fee, and a record of the megabytes used kept only for internal usage, or the account may be billed by megabytes transferred. The fee structures may be in place for power usage: it may be billed as a flat fee for usage, or the fees may be on an hourly basis, where, for example, the user gets X hours of charging time, regardless of whether he uses the power for one or for multiple devices.

To invoke the account services, the user may go to a Web site where he can register his devices to his account. Hence when the device ID comes up, the server knows which account permissions to retrieve.

Figure 7 shows a simplified flow diagram of the process of the novel art of this disclosure. In step 701, a device is set on the table section. In step 702, the presence of the device is detected. In step 703 the ID is obtained from the device, as described above. In step 704, that ID is sent to the server and is looked up to identify the user account. Then in step 705, according to the account permissions, a record that OKs the usage and gives limits, rates, etc., is sent back and received. In step 706, the power and/or network restrictions for an unauthorized user are lifted, and the user is free to use power and networking services provided by his account for his device.

The structure of the database is not described here in detail, but no special technique is required. It is well known in the art how to design databases that can look up, for example, an ID that is associated with an account and can obtain account-related information.

It is clear that many modifications and variations of this embodiment may be made by one skilled in the art without departing from the spirit of the novelty of the art of this disclosure.

InductEV, Inc.
Exhibit 1031
Page 381

In The Claims

1) An apparatus to provide wireless powering of a mobile device comprising:

a pad having an embedded coil, the coil driven by a power oscillator and is controlled by a controller, to provide a narrow-band resonance coupling.

InductEV, Inc.
Exhibit 1031
Page 382

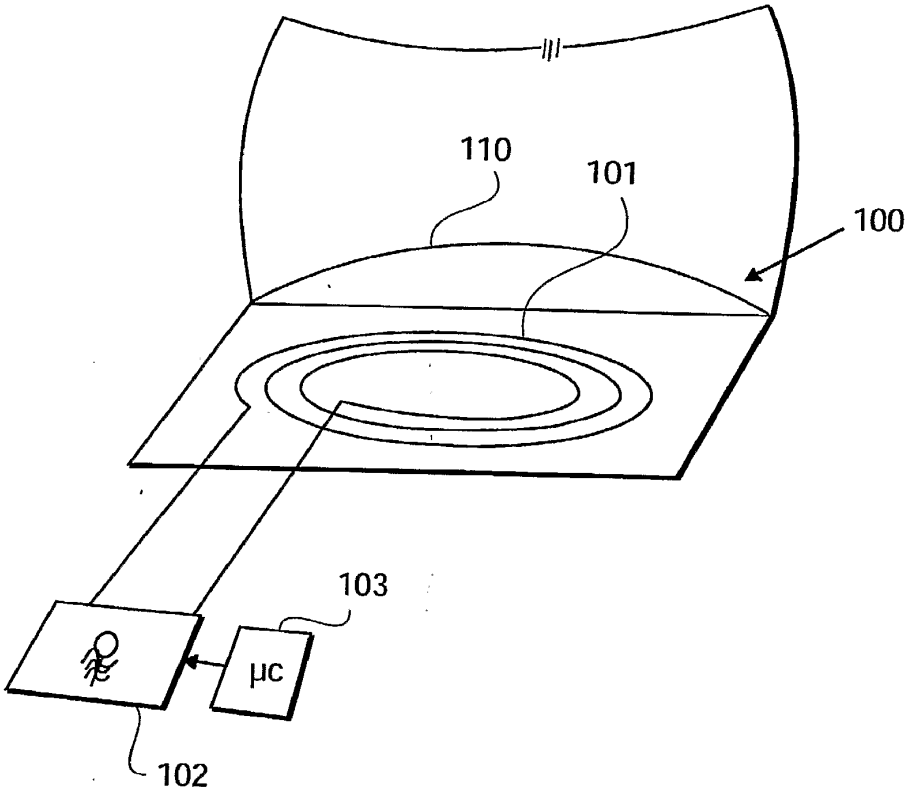

FIG. 1

InductEV, Inc.
Exhibit 1031
Page 383

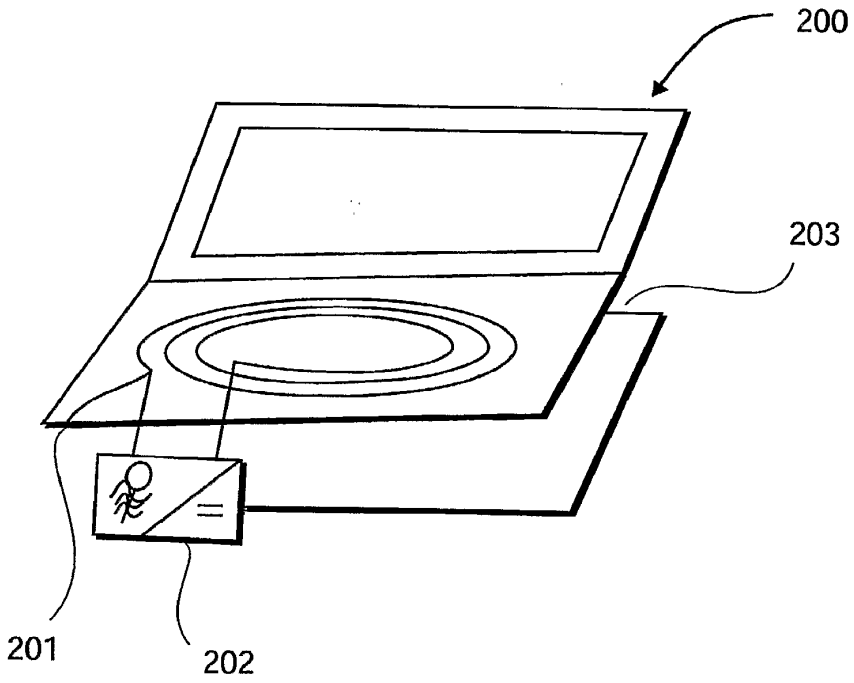

FIG. 2

InductEV, Inc.
Exhibit 1031
Page 384

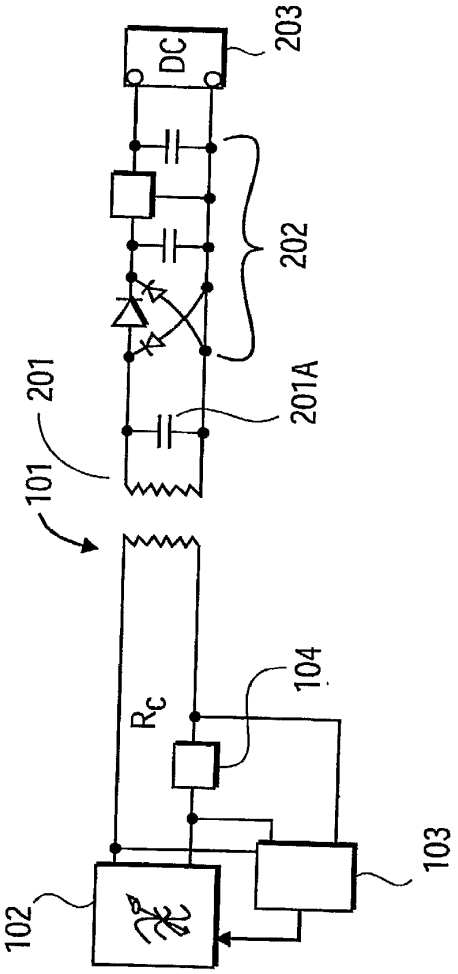

FIG. 3

InductEV, Inc.
Exhibit 1031
Page 385

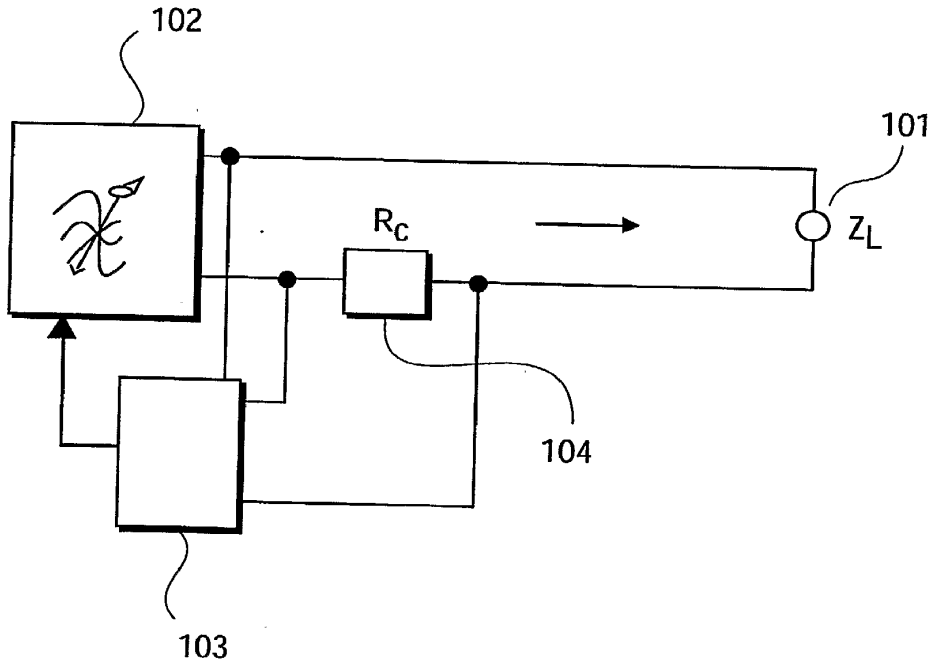

FIG. 4

InductEV, Inc.
Exhibit 1031
Page 386

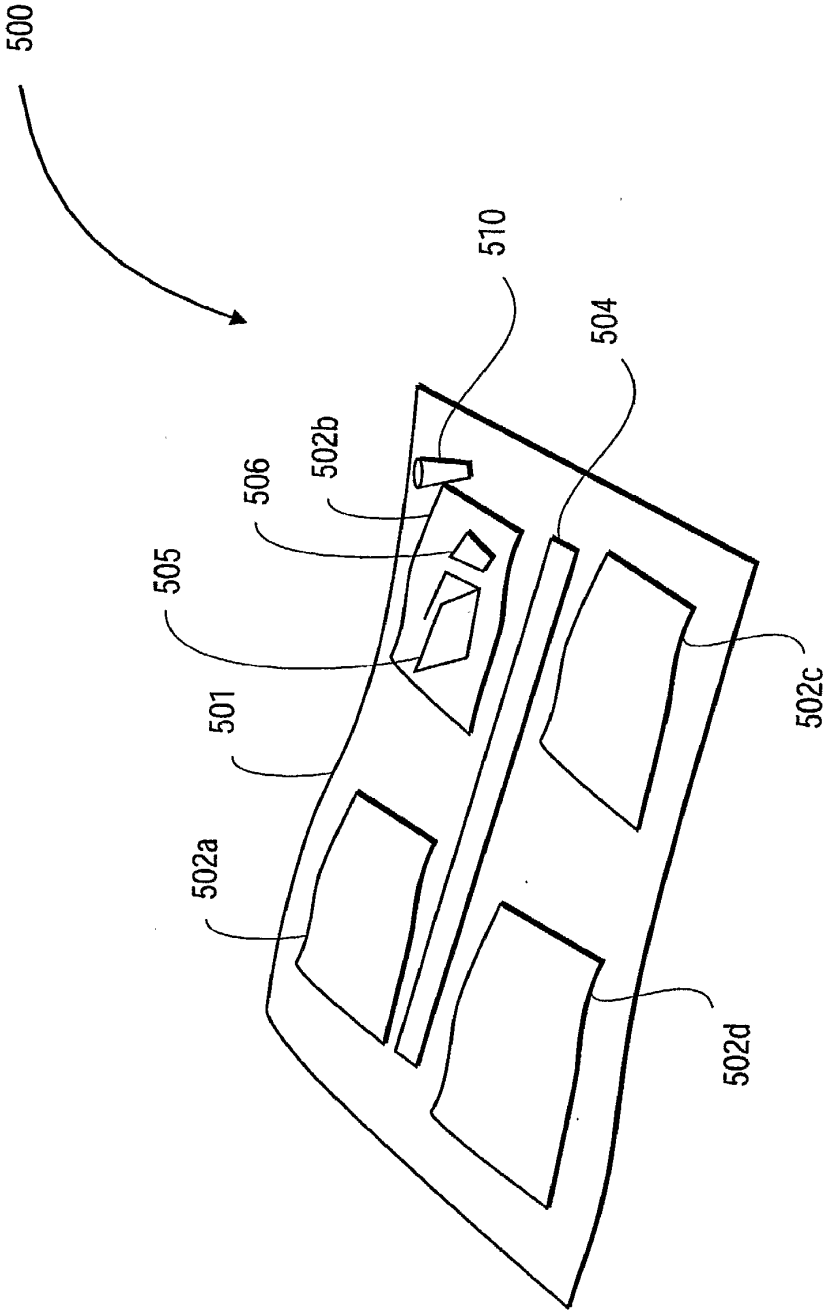

FIG. 5

InductEV, Inc.
Exhibit 1031
Page 387

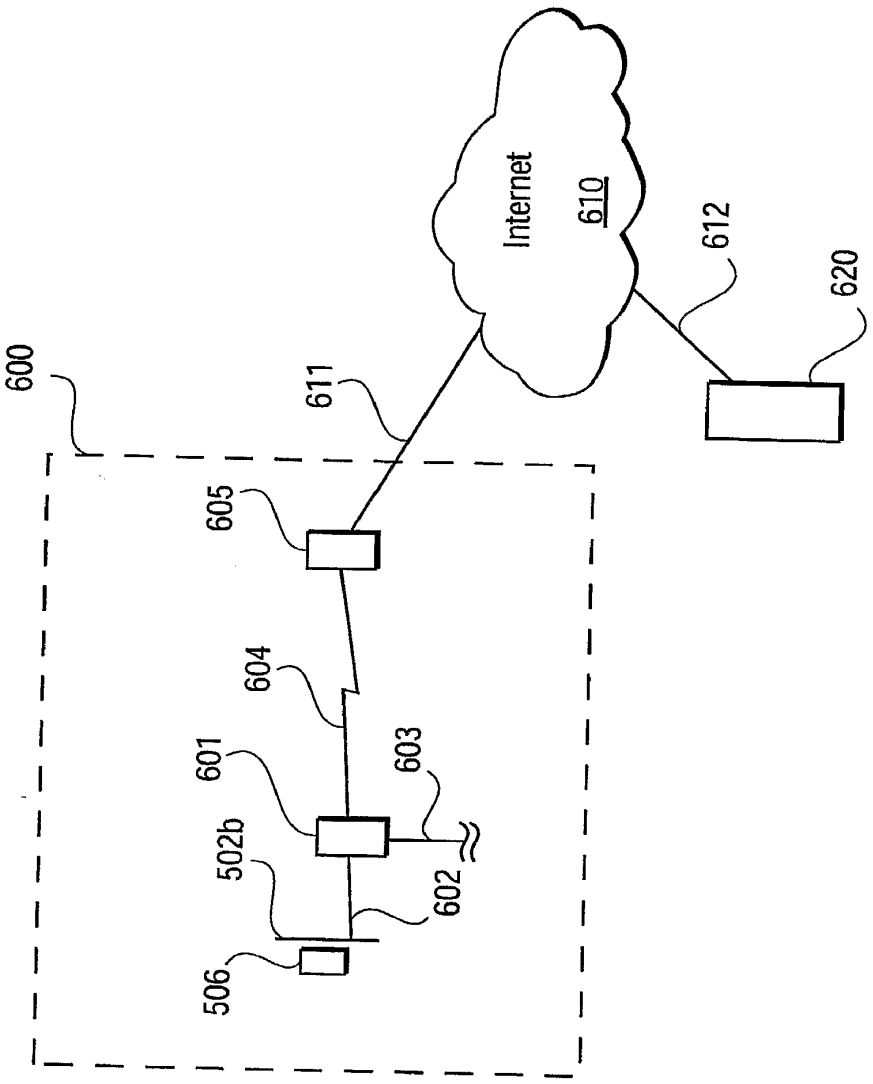

FIG. 6

InductEV, Inc.
Exhibit 1031
Page 388

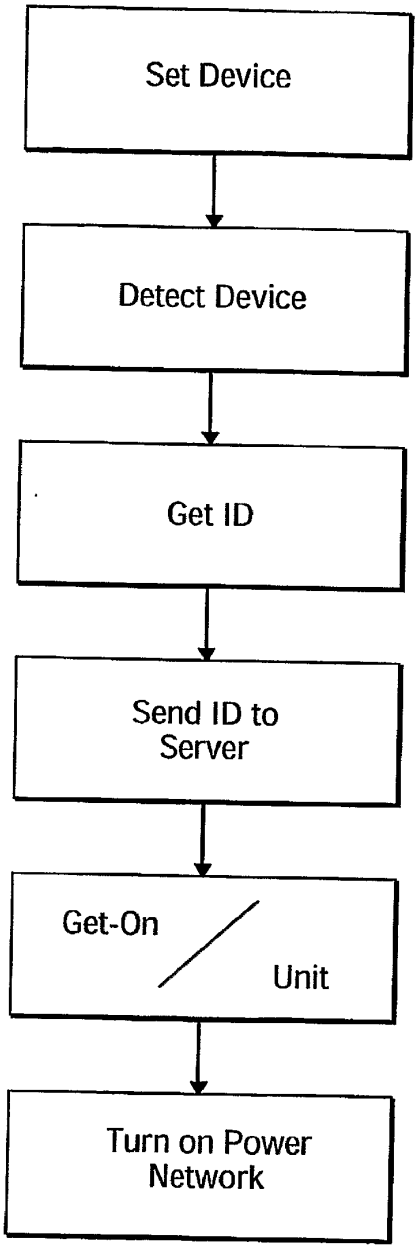

FIG. 7

InductEV, Inc.
Exhibit 1031
Page 389