US007561104B2

(12) **United States Patent**
Alles et al.

(10) **Patent No.: US 7,561,104 B2**
(45) **Date of Patent: Jul. 14, 2009**

(54) **METHOD TO MODIFY CALIBRATION DATA USED TO LOCATE A MOBILE UNIT**

(75) Inventors: **Martin Alles**, Vienna, VA (US); **John Carlson**, Dulles, VA (US); **George Maher**, Herndon, VA (US); **Selcuk Mazlum**, Leesburg, VA (US)

(73) Assignee: **Andrew LLC**, Hickory, NC (US)

(*) Notice: Subject to any disclaimer, the term of this patent is extended or adjusted under 35 U.S.C. 154(b) by 0 days.

(21) Appl. No.: **12/026,333**

(22) Filed: **Feb. 5, 2008**

(65) **Prior Publication Data**

US 2008/0186234 A1 Aug. 7, 2008

Related U.S. Application Data

(60) Provisional application No. 60/899,379, filed on Feb. 5, 2007.

(51) **Int. Cl.**
G01S 3/02 (2006.01)

(52) **U.S. Cl.** **342/451**; 342/457

(58) **Field of Classification Search** 342/357.01, 342/357.06, 451, 457, 463–465; 455/456.6, 455/457

See application file for complete search history.

(56) **References Cited**

U.S. PATENT DOCUMENTS

6,871,077	B2	3/2005	Kennedy	
7,298,314	B2 *	11/2007	Schantz et al.	342/125
2002/0172223	A1 *	11/2002	Stilp	370/480
2005/0093745	A1 *	5/2005	Krumm et al.	342/465
2005/0243936	A1	11/2005	Agrawala et al.	
2006/0030333	A1	2/2006	Ward et al.	
2006/0240843	A1	10/2006	Spain et al.	

FOREIGN PATENT DOCUMENTS

WO	00/34799	A1	6/2000

* cited by examiner

Primary Examiner—Dao L Phan
(74) *Attorney, Agent, or Firm*—Duane Morris LLP

(57) **ABSTRACT**

A method of modifying calibration data used to geo-locate a mobile station located in an indoor environment is disclosed. When a mobile station is located indoors, the signal strength of signals received and/or transmitted by the mobile station have the tendency to be lower than the strength of the signals received by a mobile station located outdoors. As a result of these lower signal strengths, geo-location efforts which rely on signal strengths may result in unsatisfactory location accuracy. Modifying pre-existing calibration data obtained outdoors may provide a way to simulate indoor calibration data characteristics.

21 Claims, 10 Drawing Sheets

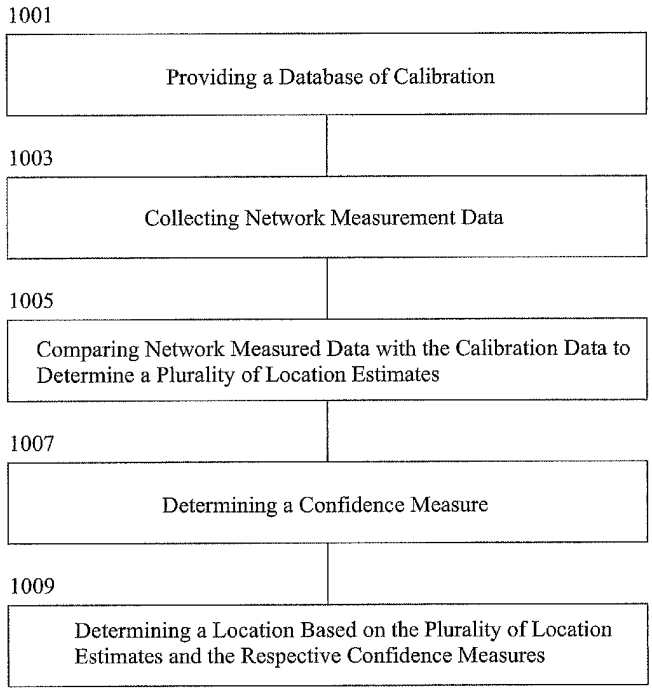

GOOGLE EXHIBIT 1001
Google v. Geoscope

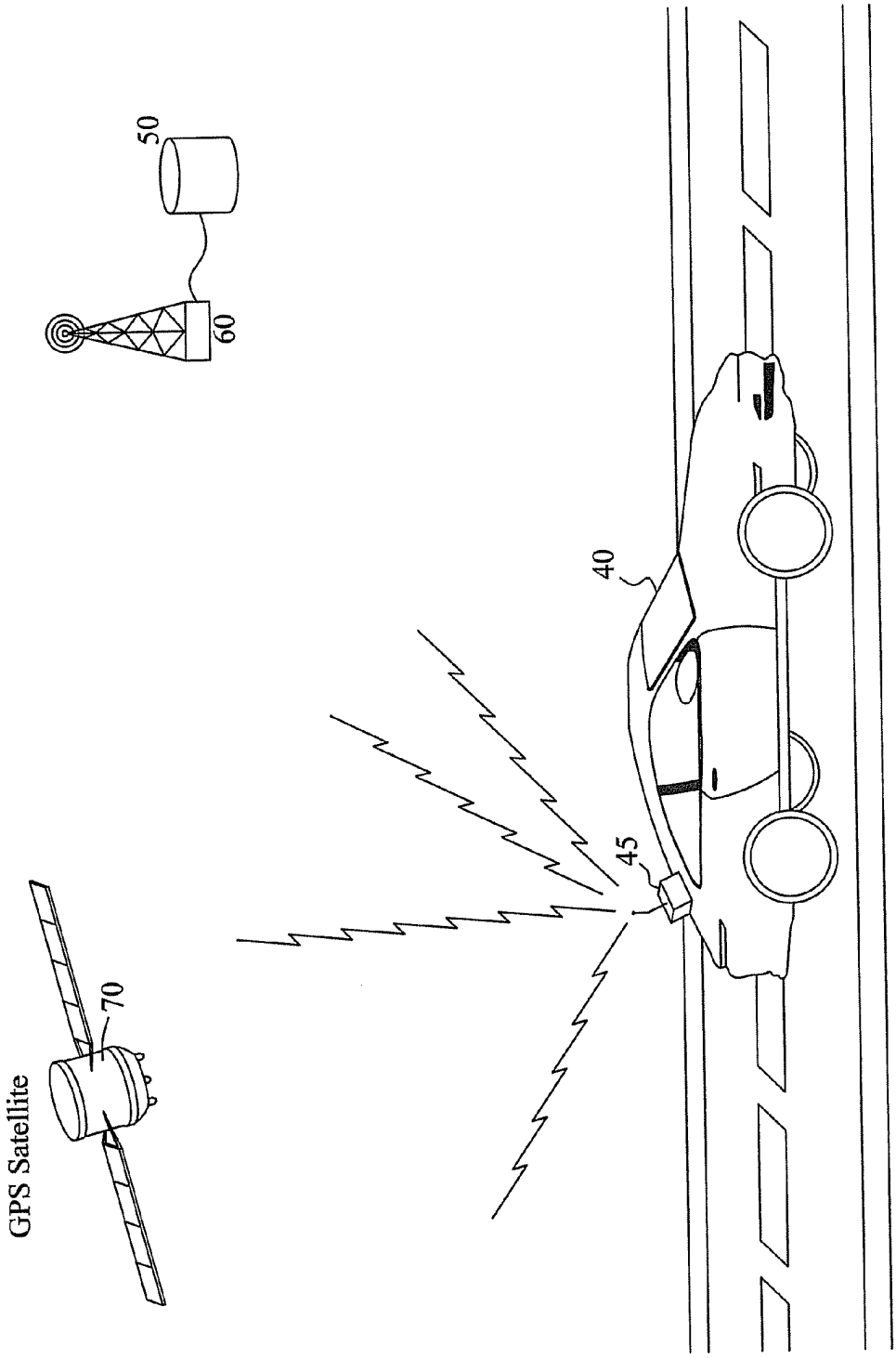

Figure 1

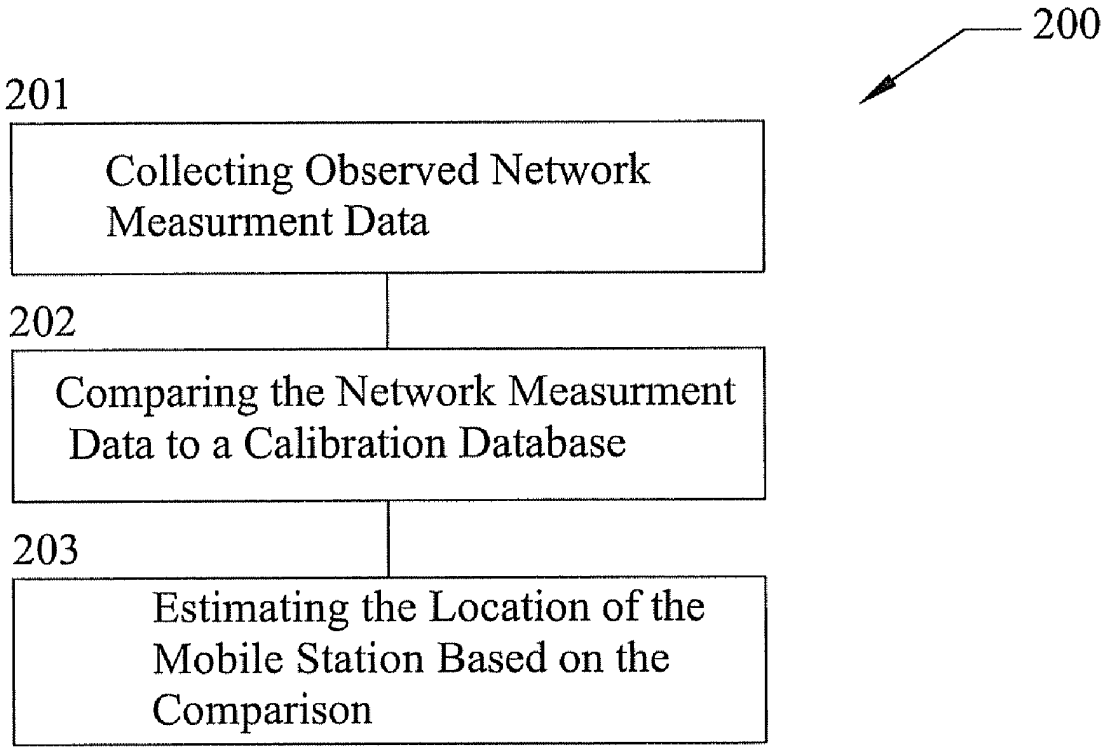
200
201
Collecting Observed Network Measurment Data
202
Comparing the Network Measurment Data to a Calibration Database
203
Estimating the Location of the Mobile Station Based on the Comparison

Figure 2

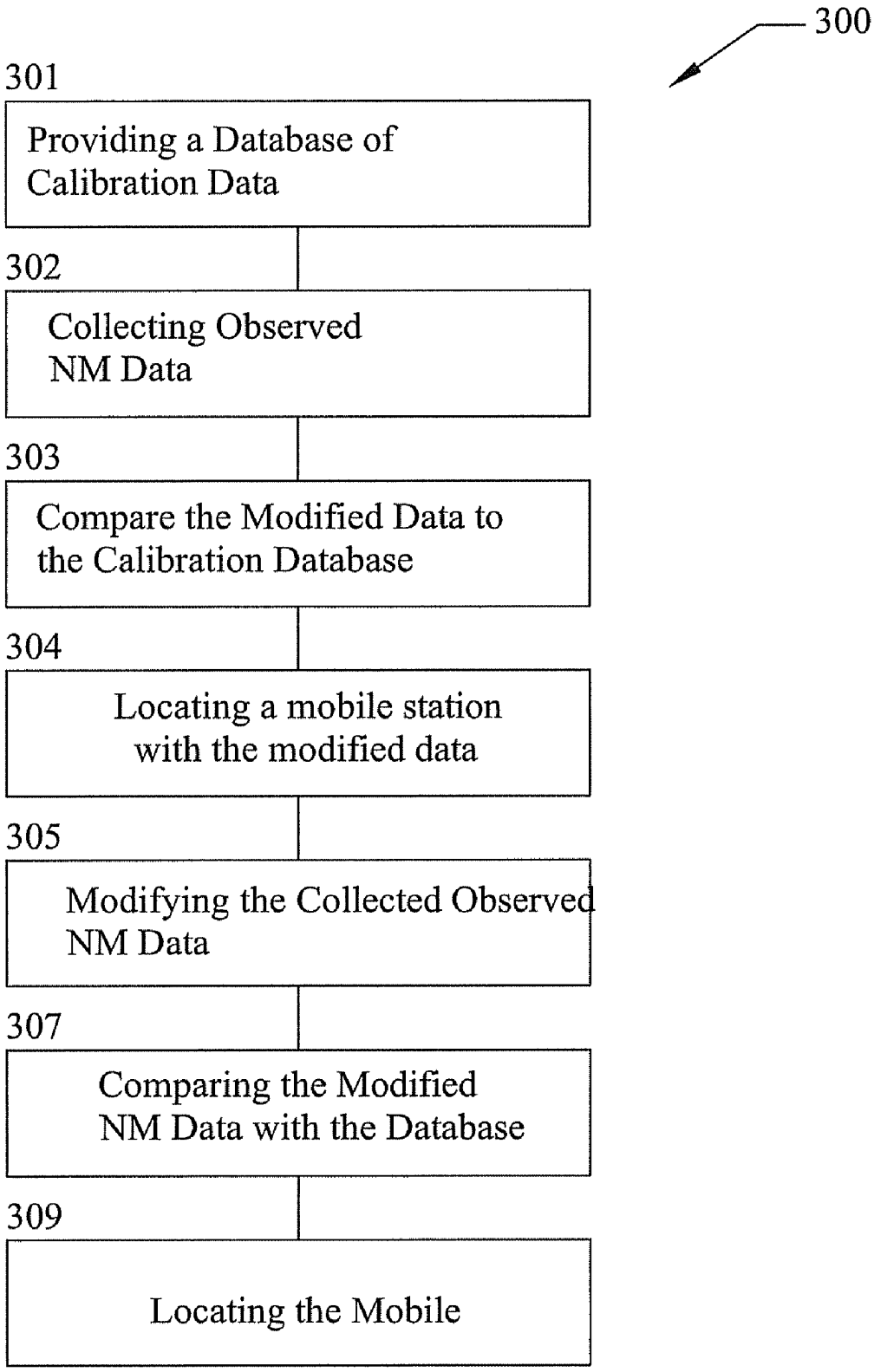
300
301
Providing a Database of Calibration Data
302
Collecting Observed NM Data
303
Compare the Modified Data to the Calibration Database
304
Locating a mobile station with the modified data
305
Modifying the Collected Observed NM Data
307
Comparing the Modified NM Data with the Database
309
Locating the Mobile

Figure 3

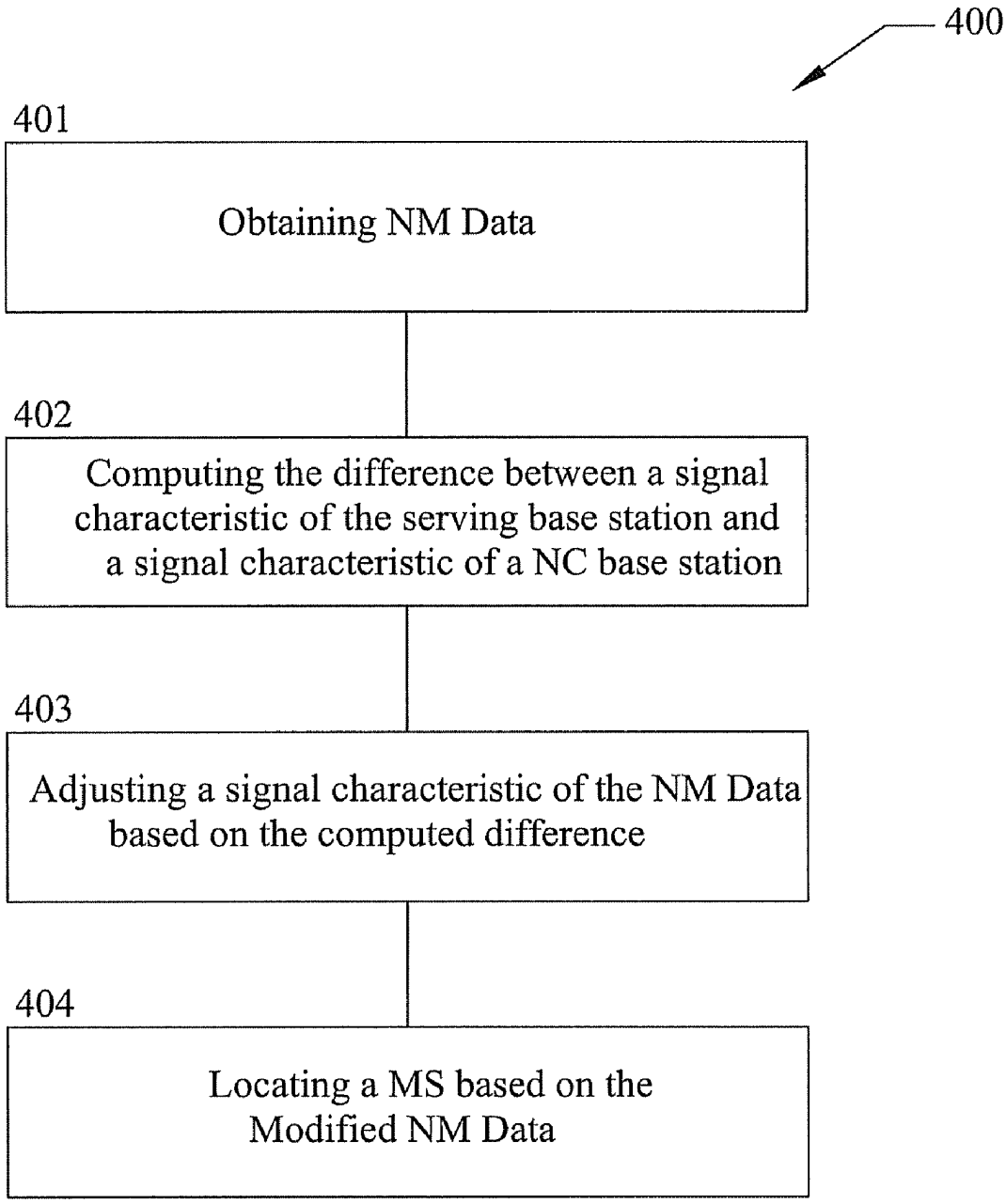
400
401
Obtaining NM Data
402
Computing the difference between a signal characteristic of the serving base station and a signal characteristic of a NC base station
403
Adjusting a signal characteristic of the NM Data based on the computed difference
404
Locating a MS based on the Modified NM Data

Figure 4

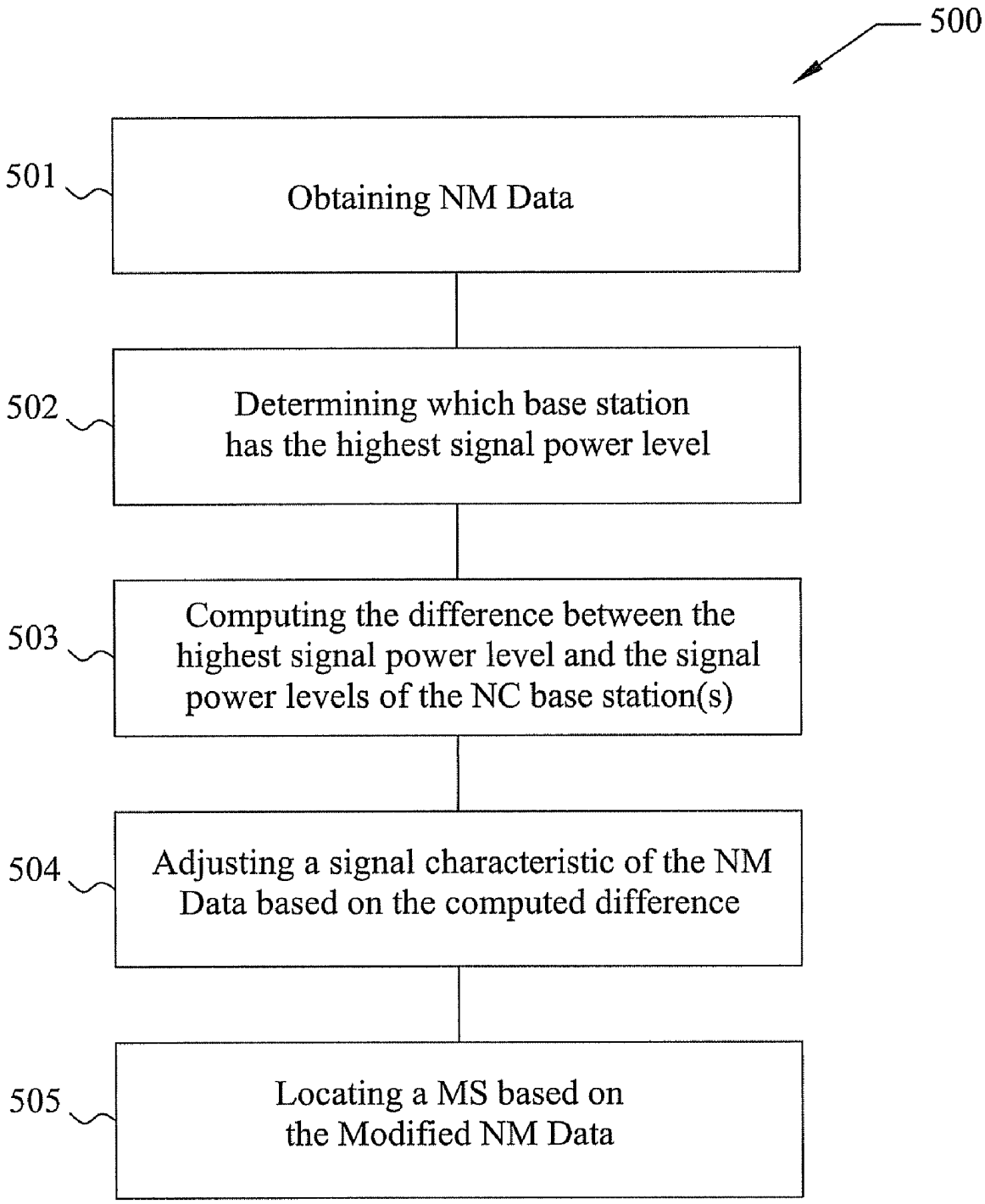
500
501
Obtaining NM Data
502
Determining which base station has the highest signal power level
503
Computing the difference between the highest signal power level and the signal power levels of the NC base station(s)
504
Adjusting a signal characteristic of the NM Data based on the computed difference
505
Locating a MS based on the Modified NM Data

Figure 5

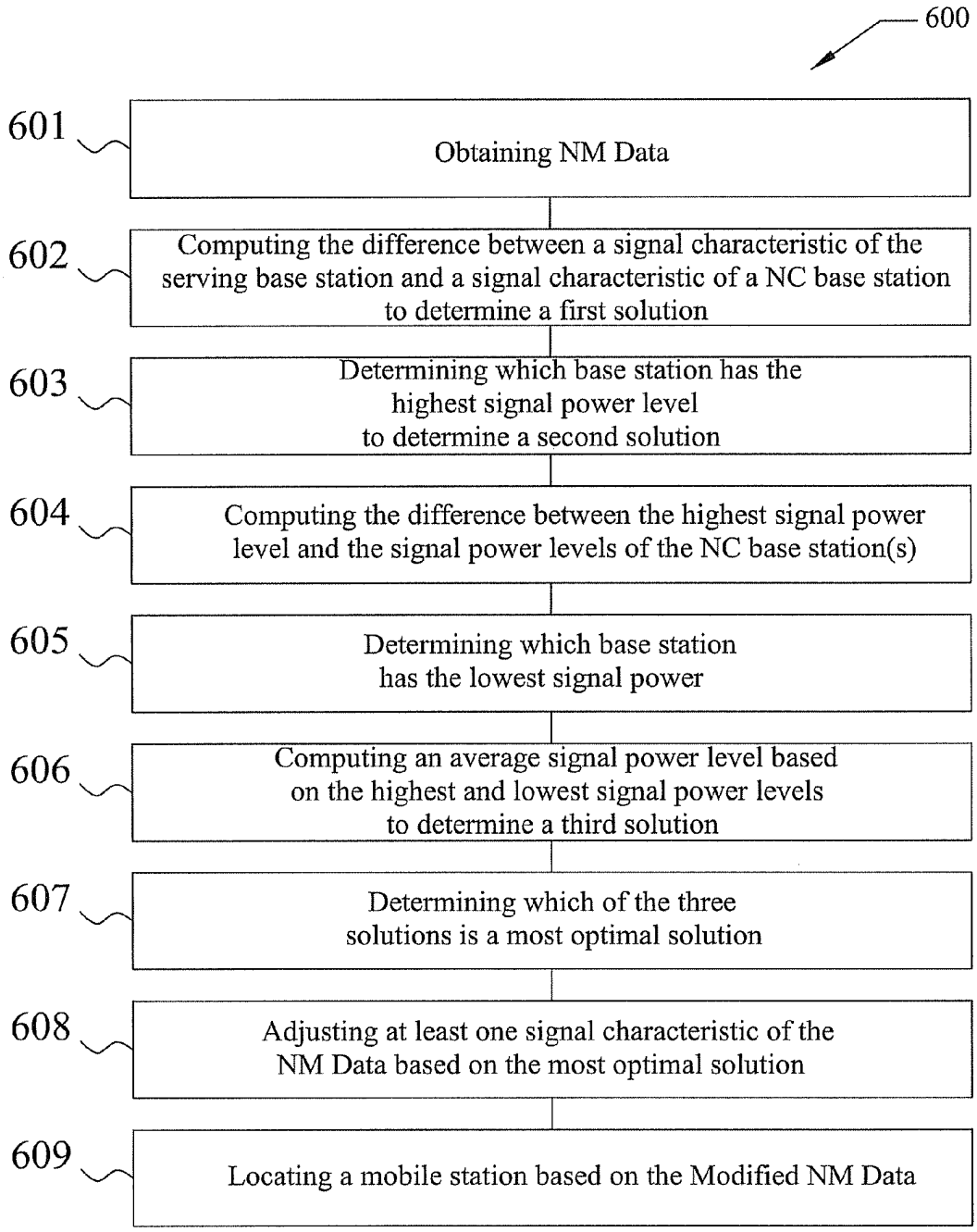
600
601
Obtaining NM Data
602
Computing the difference between a signal characteristic of the serving base station and a signal characteristic of a NC base station to determine a first solution
603
Determining which base station has the highest signal power level to determine a second solution
604
Computing the difference between the highest signal power level and the signal power levels of the NC base station(s)
605
Determining which base station has the lowest signal power
606
Computing an average signal power level based on the highest and lowest signal power levels to determine a third solution
607
Determining which of the three solutions is a most optimal solution
608
Adjusting at least one signal characteristic of the NM Data based on the most optimal solution
609
Locating a mobile station based on the Modified NM Data

Figure 6

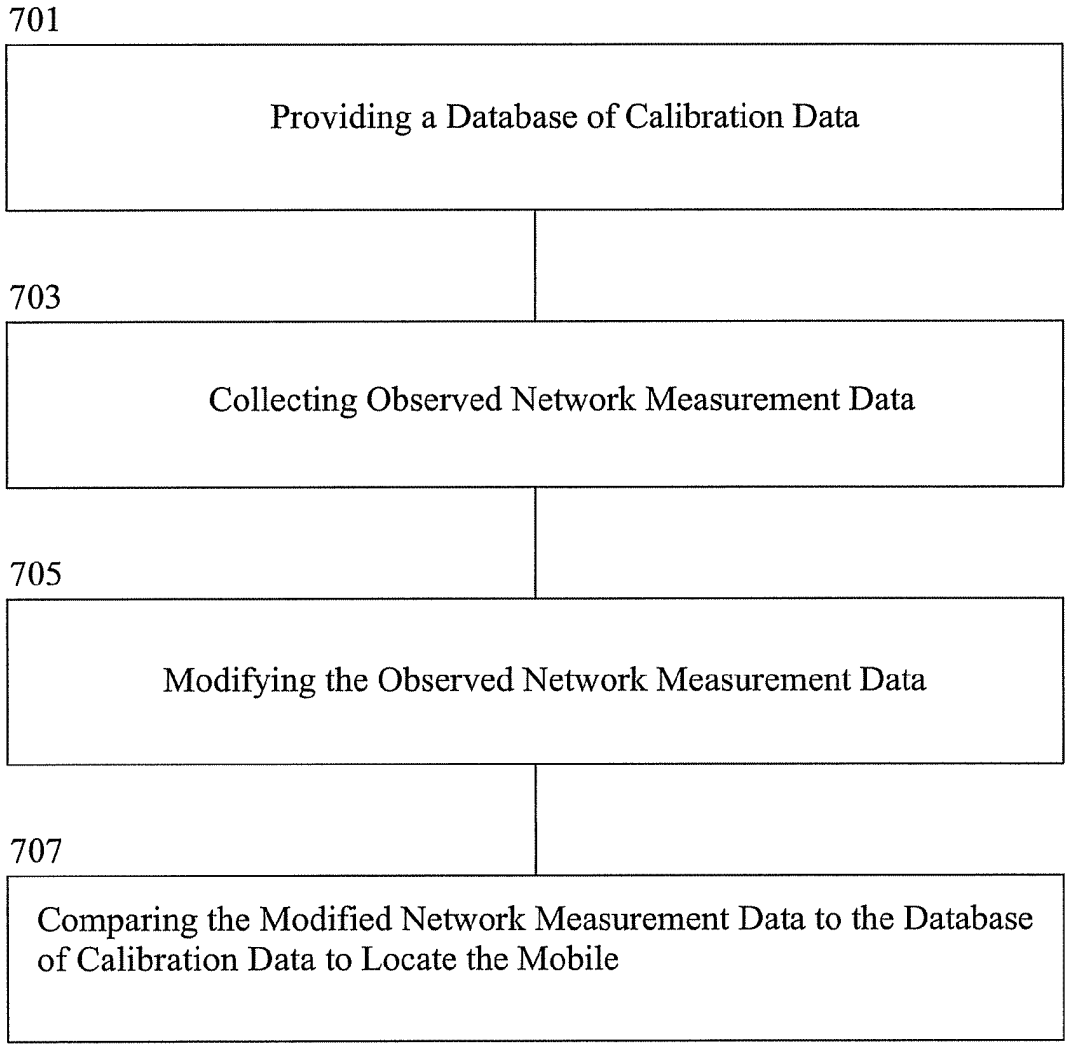
701
Providing a Database of Calibration Data
703
Collecting Observed Network Measurement Data
705
Modifying the Observed Network Measurement Data
707
Comparing the Modified Network Measurement Data to the Database of Calibration Data to Locate the Mobile

Figure 7

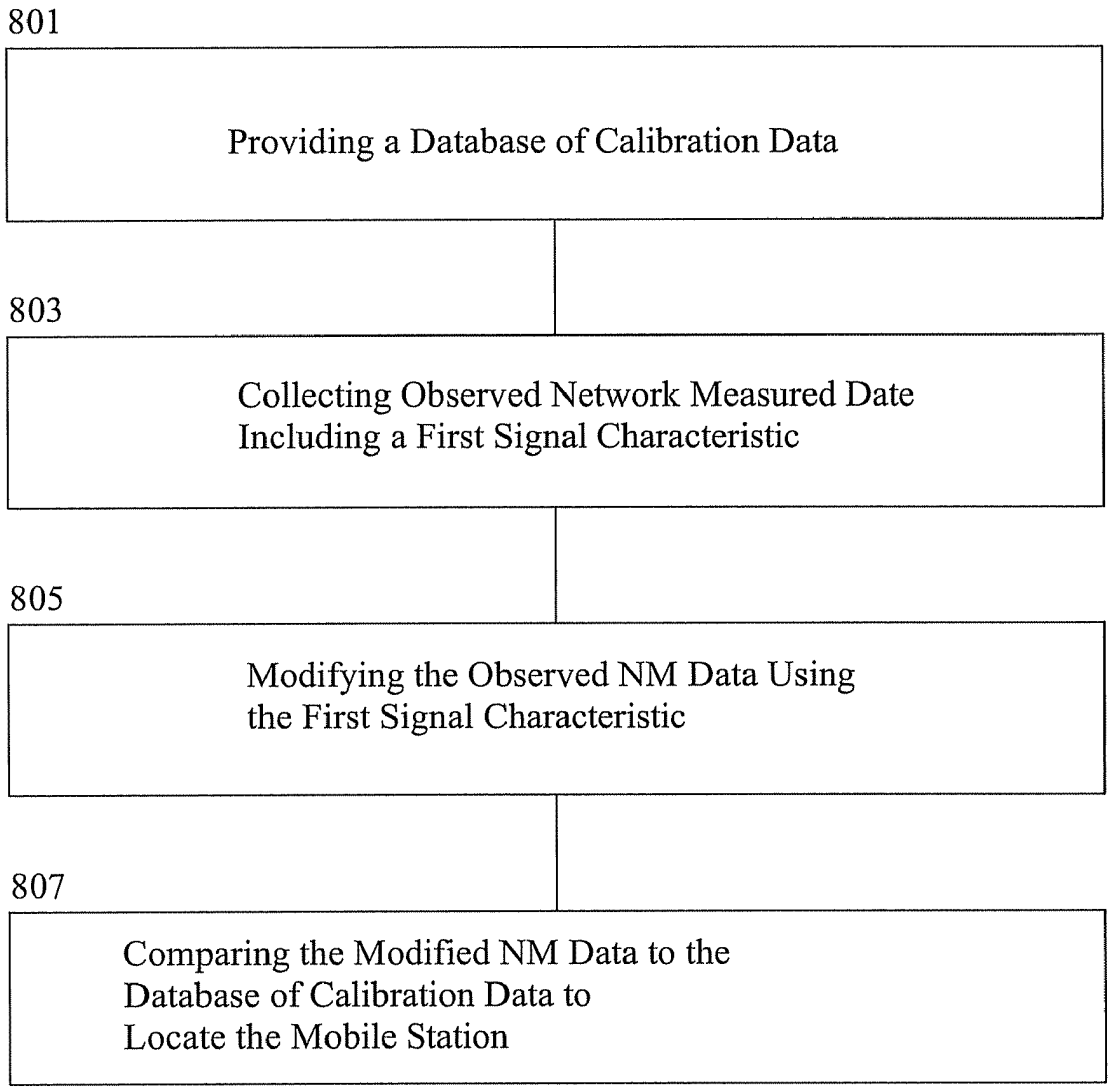
801
Providing a Database of Calibration Data
803
Collecting Observed Network Measured Date Including a First Signal Characteristic
805
Modifying the Observed NM Data Using the First Signal Characteristic
807
Comparing the Modified NM Data to the Database of Calibration Data to Locate the Mobile Station

Figure 8

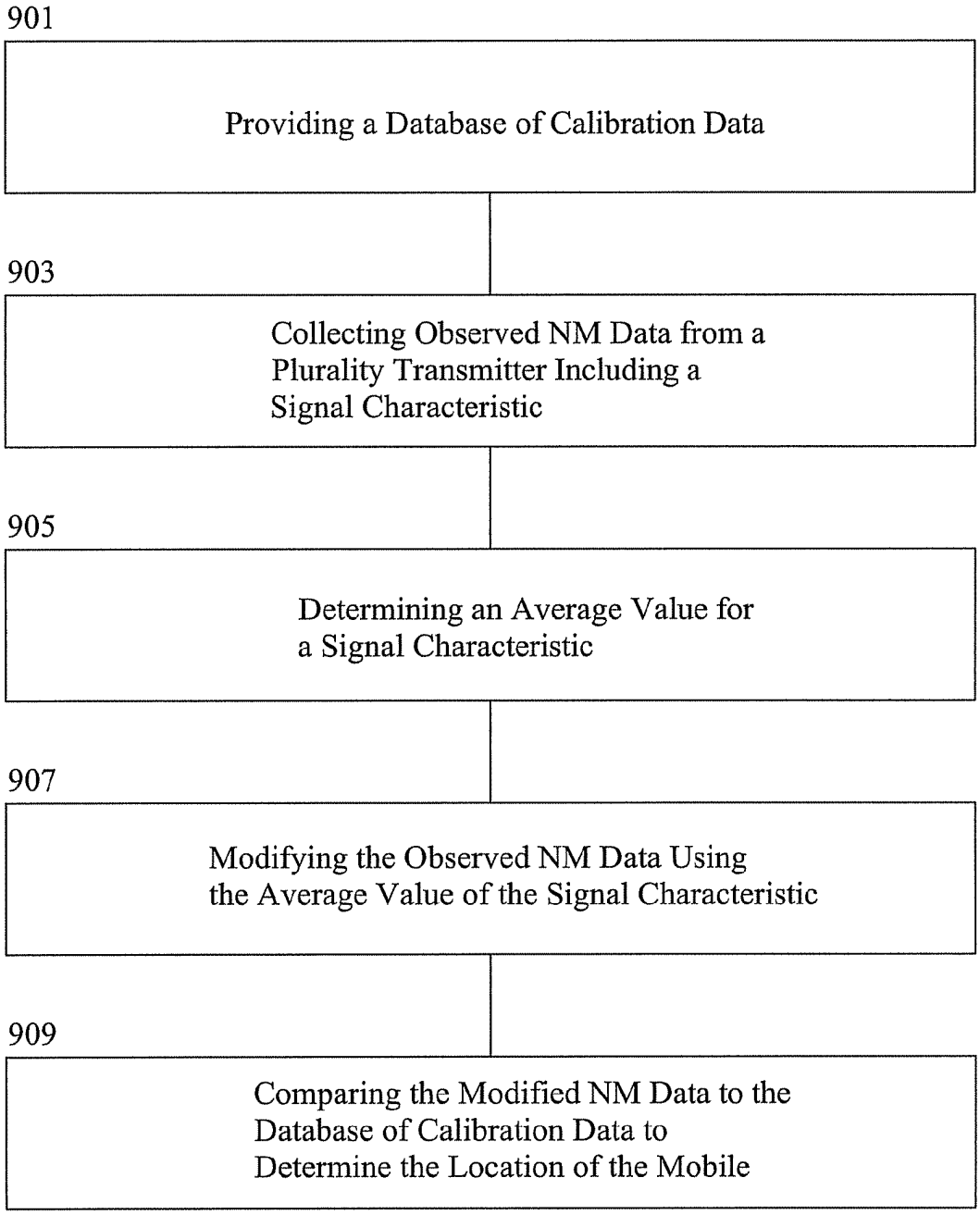
901
Providing a Database of Calibration Data
903
Collecting Observed NM Data from a Plurality Transmitter Including a Signal Characteristic
905
Determining an Average Value for a Signal Characteristic
907
Modifying the Observed NM Data Using the Average Value of the Signal Characteristic
909
Comparing the Modified NM Data to the Database of Calibration Data to Determine the Location of the Mobile

Figure 9

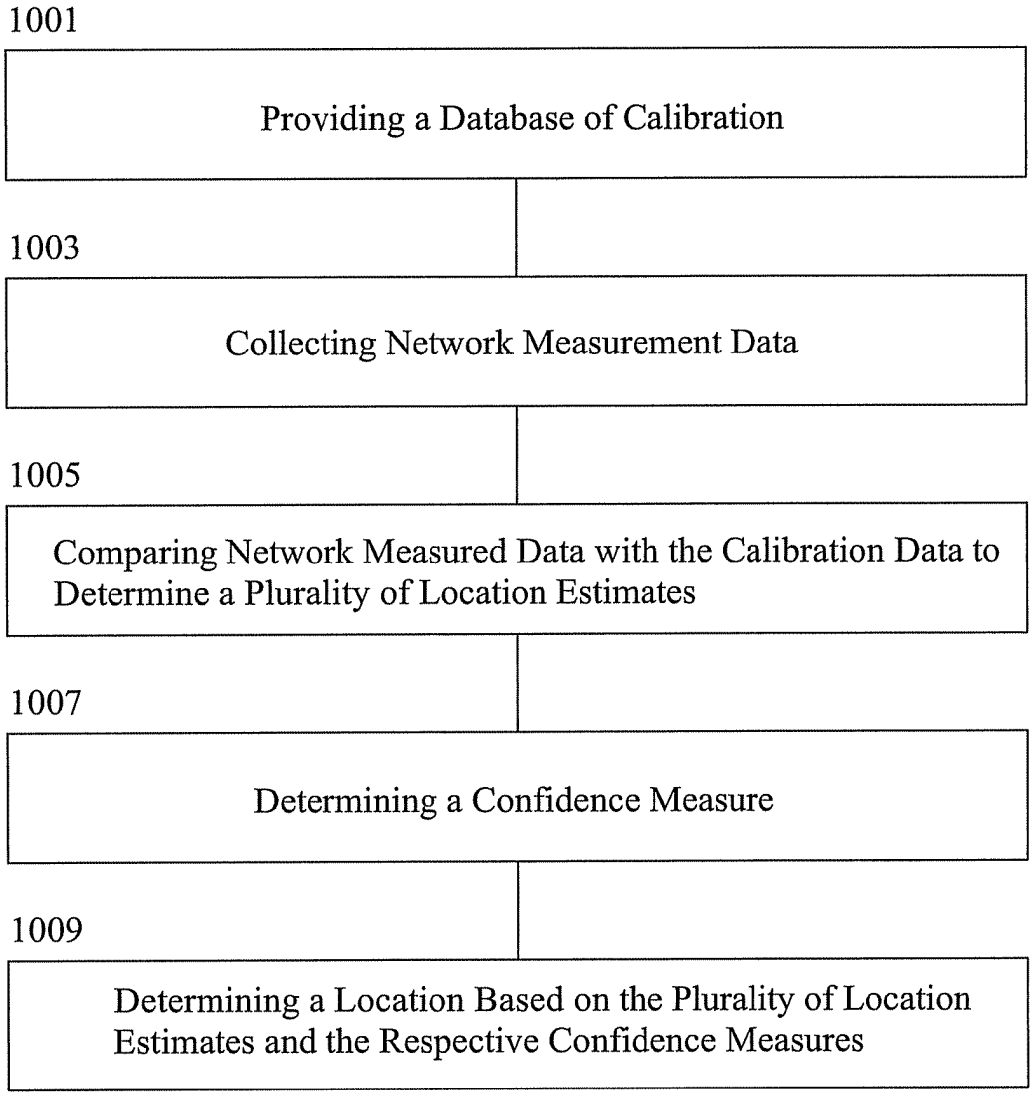
1001
Providing a Database of Calibration
1003
Collecting Network Measurement Data
1005
Comparing Network Measured Data with the Calibration Data to Determine a Plurality of Location Estimates
1007
Determining a Confidence Measure
1009
Determining a Location Based on the Plurality of Location Estimates and the Respective Confidence Measures

Figure 10

METHOD TO MODIFY CALIBRATION DATA USED TO LOCATE A MOBILE UNIT

CROSS REFERENCES

The present application is related to provisional application No. 60/899,379 entitled "Mobile Location Using Network Measurement Reports" filed on Feb. 5, 2007, which is hereby incorporated by reference in its entirety.

BACKGROUND

The use of wireless communication devices such as telephones, pagers, personal digital assistants, laptop computers, etc., hereinafter referred to collectively as "mobile appliances" or "mobiles stations" has become prevalent in today's society. In recent years, at the urging of public safety groups, there has been increased interest in technology which can determine the geographic position or "geo-locate" a mobile station in certain circumstances.

Estimating the location or "geo-locating" a mobile station may require one or more types of calibration data associated with the mobile station (e.g., signal strength, round trip time, time difference of arrival (TDOA), etc.). Calibration data is typically collected in an outdoor environment. The primary reason for collecting calibration data outdoors is the greater ease of performing automated calibration collection procedures or, in some instances, manual collection procedures along roads. It is more time-consuming to perform calibration procedures indoors due to the required access to buildings and the inability to utilize automated collection procedures designed for outdoor environments.

When a wireless device is located indoors, the signal strengths of signals received from the serving and/or neighboring base stations tend to be lower than the strength of the signals received by a wireless device located outdoors. As a result of these lower signal strengths, performing comparisons between the received signal strengths of the indoor wireless device and signal strength data stored in a calibration database may result in a poor estimated location accuracy. Modifying the calibration data obtained outdoors may provide a way to simulate indoor calibration data characteristics. Calibration data collected in areas located adjacent to indoor facilities may be altered to increase the accuracy of location estimates of a mobile station located indoors.

One embodiment of the present subject matter is a method for determining a location of a mobile station. The method includes providing a database of previously-gathered calibration data for a predetermined region in a wireless network and collecting observed network measurement data. The method also includes modifying the observed network measurements and then comparing the modified data with the database of calibration data to determine the location of the mobile station.

Another embodiment of the present subject matter is a system for determining a location of a mobile station. The system includes a database of previously-gathered calibration data for a region in a wireless network and circuitry such as a wireless receiver for collecting observed network measurement data. The system includes circuitry, such as a processor, for modifying the observed network measurement data; and circuitry, such as a processor, for comparing the modified data with the calibration data in the database to determine the location of the mobile station.

Yet another embodiment of the present subject matter is a method for determining a location of a mobile station. The method includes providing a database of previously-gathered calibration data for a region in a wireless network which includes a serving transmitter. The method collects observed network measurement data including a first network characteristic from said serving transmitter and modifies the observed network measurement data using said first characteristic. The method compares the modified network measurement data with the database of calibration data to thereby determine the location of the mobile station.

Still yet another embodiment of the present subject matter is a method for determining a location of a mobile station. The method includes providing a database of previously-gathered calibration data for a region in a wireless network including a first transmitter and a second transmitter. The method also includes collecting observed network measurement data including a first and second signal characteristic from the first and second transmitters respectively and determining which of the first and second signal characteristics has a greater magnitude. The observed network measurement data may be modified using the greater magnitude signal characteristic, and the modified network measurement data may be compared with the database of calibration data to determine the location of the mobile station.

A further embodiment of the present subject matter is a method for determining a location of a mobile station. The method includes providing a database of previously-gathered calibration data for a region in a wireless network and collecting observed network measurement data from a plurality of transmitters which includes a signal characteristic from each one of said plural transmitters. The method also includes determining an average value for the signal characteristics and modifying the observed network measurement data using the average value. The method may then compare the modified network measurement data with the database of calibration data to determine the location of the mobile station.

Still a further embodiment of the present subject matter recognizes that it may be desirable to locate a mobile station by obtaining at least one network measurement report representing at least one first signal characteristic of the mobile station's serving base station, and at least one second and third signal characteristics of neighboring base stations. The method may also compute the difference between the at least one first signal characteristic of the mobile station's serving base station and the at least one second signal characteristic of at least one of the neighboring base stations to determine a first solution and determine which neighboring base station has the highest signal power level at a particular location. The difference between the highest signal power and the power levels of the serving base station and the remaining neighboring base stations may be computed to determine a second solution. It may also be determined which neighboring base station has the lowest signal power level at the particular location. The method may also comprise computing an average signal power level intermediary to the difference between the highest signal power level and the lowest signal power level to determine a third solution and determining which of the three solutions is a most optimal solution based on at least one comparison of the three solutions. At least one signal characteristic of the network measurement report may be adjusted based on the most optimal solution and the modified network measurement report may be utilized to locate a mobile station.

Another embodiment of the present subject matter is a method for determining a location of a mobile station. The method includes providing a database of previously-gathered outdoor calibration data for a region in a wireless network, collecting network measurement data, and comparing the network measurement data with the database of calibration

data to thereby determine several location estimates of the mobile station. The method may also include determining a confidence measure for each of the plurality of location estimates and determining the location of the mobile station based on the plurality of location estimates and their respective confidence measures.

These and other advantages of the disclosed subject matter over the prior art will be readily apparent to one skilled in the art to which the disclosure pertains from a perusal of the claims, the appended drawings, and the following detailed description of the preferred embodiments.

BRIEF DESCRIPTION OF THE DRAWINGS

FIG. **1** illustrates a wireless communications networking environment.

FIG. **2** illustrates a flow diagram of an exemplary inventive concept.

FIG. **3** illustrates a flow diagram of another exemplary inventive concept.

FIG. **4** illustrates a flow diagram of yet another exemplary inventive concept.

FIG. **5** illustrates a flow diagram of still another exemplary inventive concept.

FIG. **6** illustrates a flow diagram of still yet another exemplary inventive concept.

FIG. **7** illustrates a flow diagram of an embodiment of the subject matter.

FIG. **8** illustrates a flow diagram of another embodiment of the subject matter.

FIG. **9** illustrates a flow diagram of another embodiment of the subject matter.

FIG. **10** illustrates a flow diagram of another embodiment of the subject matter.

DETAILED DESCRIPTION

Calibration data samples obtained outdoors may be used to simulate indoor calibration data to locate a mobile station (MS) in an indoor facility. A method of utilizing calibration data samples to represent indoor and/or outdoor wireless networking environments is described herein.

Reliably locating a mobile station located indoors, even when the calibration data has been obtained in an outdoor environment, may simplify a calibration collection procedure. Calibration data obtained outdoors may be modified and substituted for indoor calibration data. In addition network measurement data may be modified for comparison with the outdoor calibration data.

In general, a non-uniform grid point (NUG) may represent the signal characteristics and/or calibration data over a given region. As illustrated in FIG. **1**, a set of NUGs (NUG**1**, NUG**2** and NUG**3**) are shown as being a part of a larger geographical region (R), which includes various wireless networking components (e.g., (MS **11** and BS **20**—NUG**1**), (MSs **12**-**15**—NUG**2**) and (MSs **16**-**18** and BS **30**—NUG**3**)). The NUGs represent an area of collected calibration data, which may be stored in a database for easy retrieval during a calibration data comparison operation between the NUG and a received network measurement report (NMR).

Calibration data may be obtained from data collection devices during field test operations, and/or from MSs or other communication devices within the general area of the NUG. Cross-NUG communications may occur between MSs and/or BSs located within communication range of one or more of the NUGs. For example, BS **10** may be located outside the region (R) and may communicate with one or more devices located in the various NUGs **1**-**3**. The different NUGs **1**-**3** may be separately defined by a variety of parameters. For example, geographical areas (e.g., mountains, buildings, roads) may be a factor in deciding the boundaries of a NUG. Additionally, varying concentrations of MSs may be another factor that separates one NUG from another.

Network measurement reports (NMRs) may be used to represent network characteristics at particular locations within a given region (R). Any point located within a NUG may have corresponding signal strength levels that represent the signal power of the serving and/or neighboring cell (NC) BSs. An exemplary NMR may be represented by example_data_vector=[P**1**, P**2**, P**3**, TA**1**]. Referring to FIG. **1**, the power level signals (P**1**-P**3**) may represent the power levels of the three BSs **10**, **20** and **30**, as measured at a particular location. The timing advance parameter TA**1** (or equivalent parameter) may be used to represent timing information of signals transmitted between the MS and one or more BSs.

The value of the timing advance (TA) parameter corresponds to the length of time a signal from a MS takes to reach a particular BS. A MS may be configured to transmit data signals at specific timeslot intervals depending on the type of wireless communication protocol employed (e.g., TDMA, GSM, 3GPP etc.). Using the speed of light (c=3*10ˆ8 m/s) as a reference velocity for the radio waves, the TA parameter may be increased or decreased depending on the distance between the MS and the BS. The TA parameter may be periodically adjusted as the distance from the MS to the BS changes. Of course, a NMR may contain any number and type of parameters, and may be used to estimate the location of a MS.

For example, NMR(s) may be transmitted from the MS or from other wireless communication components to position determining equipment (PDE) **50**, which processes the received NMR information and may attempt to locate the position of the MS. NMR(s) may be periodically generated by MSs or other communication devices to calibrate the NUG. The NUG may also be based entirely on information received from NMR(s) generated by MSs located in the NUG.

The received Network Measurement data (NM data) may be compared to predetermined calibration data representing one or more NUGs to estimate the location of a MS. In a case where NM data is compared against a NUG, like parameters may be compared to estimate if the target MS **18** is within the NUG. Similarly, NUG parameters may be computed in response to a comparison operation, and then compared to the NM data. Each NUG may have a series of parameters and/or functions characterizing one or more particular locations in the NUG. Given a received set of one or more NMR(s) obtained from some unknown location, an estimate of that unknown location may be calculated using the characterization of the NUG or uniform grid (UG) over that region.

It may be desirable to use the original unmodified NM data directly without modification when locating a mobile station. Assuming the MS is located in an indoor facility, the data contained in the NMR(s) may be a function of calibration data collected outdoors. In some cases, the unmodified outdoor calibration data used to represent the indoor facility may provide an accurate representation of the location of the target MS **18** (e.g., low distortion structures, open-faced facilities, etc.).

Referring to FIG. **1**, the NM data may be sent from the target MS **18** to the BS **10**, where the PDE **50** processes the NMR and performs one or more comparison operations between the NM data and the calibration data of the NUG(s). Once the comparison operation is complete, the location of the target MS **18** may be estimated. A direct comparison of the

original NM data may be made against the corresponding NUG(s) characteristics. Alternatively, the NM data may not be modified even if NUG(s) are utilized to estimate the location of the mobile station.

NM data may also be modified to adjust the power levels received from the serving and/or neighboring cell (NC) base stations. For example, differences in parameters between the serving cell and the NC may be calculated and the quantities used to modify the original NM data.

If an original NMR received at the PDE **50** had the form NMR**1**=[P**1**, P**2**, P**3**, TA**1**], where P**1** is the serving BS power at a particular location, P**2** is a first NC power, P**3** is a second NC power, and TA**1** is the timing advance parameter, the modified NMR may be represented by: NMR_modified=[0, P**1**-P**2**, P**1**-P**3**, TA**1**]. The resulting data vector may be used to calculate new relative power levels of the NC BSs by subtracting or adding the NMR_modified parameters from the original NMR**1** parameters. In this example, the power of the serving BS may be used as a basis to obtain relative power level modification parameters to modify the NC power level parameters of NMR(s).

The calculated modified parameters (NMR_modified=[0, P**1**-P**2**, P**1**-P**3**, TA**1**]) may also be used to simulate an indoor facility by modifying NMR(s) received from an indoor location. Alternatively, the modified parameters may be used to conduct other calculations to obtain a desired set of modified results. For example, the modified NMR may be compared to one or more of the NUG(s) to provide an estimated location of a MS. Of course, the serving BS power level is not a required parameter to be used as a basis to obtain relative power level modification parameters, and many other parameters may be used to modify the NM data to simulate an indoor facility.

To further illustrate modification of the NMR, consider a particular implementation where the variable RxLevServing_WD represents the received signal strength of the serving base station's control channel measured by the wireless device at an unknown location. Let RxLevNeigh_i_WD represent the received signal strength of the ith neighbor's control channel, RxLevServing_DB represent the average received signal strength of the serving station's control channel, stored in a database of the PDE **50** during the calibration process, and RxLevNeigh_i_DB represent the average received signal strength of the ith neighbor's control channel stored in the database during a calibration process (i=1 to N, where N is the number of neighbor cells reported).

A comparison operation may be conducted between the received signal strengths of the NC-BSs relative to the serving BS's received signal strength. For example, a comparison may include computing the difference between the parameters of the serving base station and the ith neighbor's parameters (i.e., (RxLevServing_WD−RxLevNeigh_i_WD) and (RxLevServing_DB−RxLevNeigh_i_DB)). Once the differences are calculated, the magnitudes of the differences may be compared to a predetermined threshold value used to distinguish between an acceptable difference value requiring no modification to the NM data and a non-acceptable difference value invoking further modification efforts.

NM data may be modified by an amount relative to the signal strength of a NC-BS. In this example, the NC-BS having the highest signal power may be used as a basis to modify the values of the NM data. The differences between the NC having the highest cell power and the cell powers of the remaining NC-BSs may be calculated and the quantities thereof used to modify the original NM data.

An exemplary NMR may have the form NMR=[P**1**, P**2**, P**3**, P**4**, TA**1**], where P**1** is the serving BS signal power, P**2** is a NC having the highest signal power at the intended location of the NMR, P**3** and P**4** are different NC signal powers, and TA**1** is a timing advance parameter. In this example, P**2** has the highest signal power level and may be used as the basis for modifying the parameters of the NMR. The modified NMR may then be represented by NMR_modified**2**=[P**2**-P**1**, 0, P**2**-P**3**, P**2**-P**4**, TA**1**]. The resulting data vector NMR_modified**2** may be used to calculate new power levels of the NC base stations by subtracting or adding the NMR_modified**2** parameters to the original NMR parameters.

The modified NMR may be compared to one or more of the NUG(s). In the previous examples, the power of the serving BS and the NC with the highest signal power level were used to obtain the relative power modification quantities. The signal power level of the serving BS and/or the NC having the highest signal power may be used solely to modify the NMR, and may not be included in comparison operations against the NUG(s). If the serving BS power level parameter and/or the NC having the highest signal power level parameter are excluded from the comparison to the NUG(s), the first and/or additional terms of the NMR may be ignored during the comparison operation. Of course, any other parameter may be utilized and the example above including power level should not limit the scope of the claims appended herewith.

To further illustrate modification of the NMR, consider a particular implementation where the variable RxLevNeigh_h_WD represents the received signal strength of a neighboring BS's control channel (neighbor A) having the highest signal level, as measured by the wireless device. RxLevNeigh_h_WD may be listed first in a measurement report list containing signal strengths sorted in descending order (h=1). Let RxLevNeigh_i_WD represent the received signal strength of the ith neighbor's control channel measured (neighbor i, where i≠h), as by the wireless device, and RxLevNeigh_h_DB represent the received signal strength of the neighbor (neighbor A) with the highest received signal strength, as measured by the wireless device, and which may be stored in the PDE **50** database during a calibration process. RxLevNeigh_i_DB may be used to represent the received signal strength of the ith neighboring BS's control channel (neighbor i, where i≠h, and i=1 to N, and where N is the number of neighbors reported). RxLevNeigh_i_DB may be stored in the PDE **50** database during a calibration process.

In this example, correlation may be conducted over the received signal strengths of the NC-BSs relative to the NC-BS having the highest received signal strength, as observed by the wireless device. A comparison may include computing the difference between the parameters of the serving BS and the ith neighbor's parameters (i.e. (RxLevNeigh_h_WD−RxLevNeigh_i_WD) and (RxLevNeigh_h_DB−RxLevNeigh_i_DB)). Comparisons may also be conducted for any one, combination of or all of the measured parameters of the NC-BSs.

NM data may be modified to adjust the power levels received from the serving and/or neighboring cell (NC) base stations by an amount relative to the average signal strength of one or more NC base stations. Each signal power or parameter component of the NMR may also be modified by an average signal power or parameter level based on one or more of the measured NC signal power levels. The average received signal power level may be calculated a number of different ways, for example, the average of the two highest signal powers, the three highest powers, the average of all (N) signal powers, or an intermediary number between one or more of the measured NC signal power components. Modifying the original NMR components may include subtracting or adding to the existing NMR power components by an amount based on the calculated average, or other various known functions.

To further illustrate modification of the NMR, consider a particular implementation where RxLevNeigh_avg_WD represents the average received signal strength based upon a number of control channel signal powers of neighboring BSs, as measured by the wireless device at an unknown location to be estimated. Let RxLevNeigh_i_WD represent the received signal strength of the ith neighbor's control channel signal power, and RxLevNeigh_avg_DB represent the average received signal strength of data stored during calibration, and computed based on the neighboring BSs, as measured by the wireless device and used in computing the average received signal strength. The same neighboring BSs may be used to represent the average received signal strength of the signal power levels received by the wireless device and for the average received signal strength of calibration data stored in the PDE **50** database. Let RxLevNeigh_i_DB represent the received signal strength of the ith neighbor's control channel stored in the PDE **50** database during the calibration process (i=1 to N, where N is the number of neighbors reported).

In this example, a comparison may be conducted over the received signal strengths of the neighboring BSs relative to the average received signal strength computed for all neighboring BSs observed by the wireless device (i.e., compare between (RxLevNeigh_avg_WD−RxLevNeigh_i_WD)) and for all neighbors previously measured by the wireless device (i.e., compare between (RxLevNeigh_avg_DB−RxLevNeigh_i_DB)). The average signal power level observed over all the neighbor signal power levels may be realized in absolute powers (mW) or in relative powers (dBm).

Any combination of the above NMR modification procedures may be performed to increase the accuracy of mobile station location estimates. Further, any number of or type of parameters may be utilized in any of the aforementioned procedures and the exemplary parameters of power level, signal strength, etc. should not limit the scope of the claims appended wherewith. Certain factors impacting the modification procedure selection process may include the specific type of cellular technology, the geographical terrain and/or environmental conditions, etc. Further, the present subject matter acknowledges that some NMR modification procedures may be best suited for outdoor location estimation, while others are better suited for indoor location estimation, and some even may be best for mixed (indoor & outdoor) location estimation.

For example, if the serving BS for a mobile station is known to be in an area where there are no buildings or obstructions then it may be prudent to leave the NM data unmodified or select the NMR modification procedure where the serving base station is used as the basis to calculate NMR modifications. Further, if the serving cell is in a geographical area with known large obstructions (e.g., buildings, mountains etc.) then it may be prudent to use the NMR modification procedure that selects the NC base station having the highest signal power as the basis to calculate NMR modifications. Additionally, if the serving cell is in an area containing both outdoor and indoor facilities, then it may be best to use the average of more than one NC signal power value as the basis to modify the NMR(s).

Regardless of the type of modification algorithm selected to modify the NM data, a margin of error may still be present when attempting to determine the precise location of a mobile station. Determining the amount of location error may be useful when estimating the likelihood of accurately locating a mobile station. A confidence measure may also be used to represent the accuracy of a mobile station's estimated location.

The value of a confidence measure may vary depending on the estimated accuracy of the location estimated. If estimated locations derived from mapping NM data to a given location, whether using a NUG or other form of a data source for comparison purposes, agree under any or all combinations, the respective confidence measure "C" may be considered high. A confidence measure may also be represented as a function that increases as the quantity of measured data correctly matches data associated with a final estimated location. An exemplary confidence measure or function may be represented as a fraction of all locations that are similar to the final estimated location, however, such an example should not limit the scope of the claims appended herewith.

After one or more of the data modification procedures have been calculated, respective confidence measures may be calculated to represent the likely accuracy of the modification procedures. Confidence measures may then be compared and the best one selected to represent the appropriate modification procedure to implement.

Certain estimated locations may be assigned weights by using a confidence measure as a weight to represent the probability of locating a mobile station at a given location. For example, confidence measures may be based on one or more calculated parameters, including, but not limited to: a probability density function (PDF), a joint PDF, Mahalanobis distance, distortion measure, ordered number parameter, timing advance (TA) parameter, mobile orientation etc. The calculated parameters may be derived from the NUG calibration data stored in the PDE **50** database. The parameters may be pre-stored in memory or may be calculated during a NMR to NUG comparison operation.

Probability density functions may be calculated based on an individual NC base station power level, or a set of multiple NC base station power levels. The calculated probability density function may be compared to the set of available NUGs (i.e., NUGS **1**-**3** of FIG. **1**) to determine a probability that the NM data matches a particular NUG location. A joint probability may also be calculated over a set of probabilities to further estimate the location of the mobile station. The results of the calculated PDF may be used in a number of estimation techniques to locate the mobile station.

Distortion measures may be determined at a particular location may be included in a NMR and used in a comparison operation to measure the difference in distortion between NUG data and NM data. The distortion measures may be used to estimate a location of a mobile station based on the results of the comparison.

A Mahalanobis distance may be an exemplary distortion measure and may utilized to assist in identifying and analyzing different patterns in a wireless communications environment. The Mahalanobis distance may also be useful in determining similarities between an unknown sample data set and a known data set.

Ordering number lists may also be used to organize parameters for comparison purposes. An ordering number list may be a list or table of data parameters organized in a particular order. The power levels may be listed in descending order and compared to similar parameters associated with a NUG(s). A threshold power level may be used to represent an acceptable amount of deviation between a comparison of power levels obtained from a NMR(s) and/or a NUG(s). If one or more power levels in the NMR(s) and the NUG(s) fall within an acceptable range of one another, the location of a mobile station may be measured with a corresponding degree of accuracy.

Each generated NMR may be used to provide an individual estimate of the mobile station's location. The PDE **50** may

receive a number of NMRs over a period of time, a corresponding number of location estimates may be generated based on the number of NMRs received. These estimates may be combined in a statistical algorithm and may provide a more accurate location estimate than the individual NMRs.

Given a particular NMR or set of NMR(s) containing data collected outdoors, a selection procedure may be conducted to select the most appropriate modification procedure to use when modifying the NM data. Once one or more of the above described NMR modification procedures have been calculated, (e.g., non-modification, serving cell power level, highest NC power level, average(s) of the NC power levels, etc.) one or more of these calculations may be selected as an optimal solution to be used to modify the NMR.

One way to determine the optimal solution that should be used to modify the NMR is to calculate a confidence measure for each of the calculated modification procedures. Once the confidence measures have been calculated, the optimal solution may be selected as the modification procedure with the highest confidence measure. Alternatively, a location estimate may be made by weighting the individual solutions by the applicable confidence measure and combining the results into a single NMR solution.

Combining multiple NMR(s) may generate a location estimate with increased accuracy. When comparing NM data to a NUG, the grid point data that most closely matches the NM data may become the estimated location of the mobile station. In an alternative arrangement, interpolation may be used for determining a location that falls between two grid points to provide an even more accurate location estimate. Applying probabilistic weights, hypotheses and deriving confidence measures may increase the accuracy of the location estimates. Utilizing exemplary probabilistic measures, the estimated location of a mobile station may be determined within a particular degree of certainty. A similar approach may also be applied to select the appropriate NMR modification procedure to accommodate for varying conditions and other operational variables (e.g., different air standards, varying environmental circumstances, etc.).

FIG. **2** illustrates a flow diagram **200** of a method to locate a mobile station. Observed network measurement data may be collected (operation **201**). The observed data would typically be the same or similar to the data in a network measurement report (NMR). The network measurement data represents at least one network characteristic observed by the mobile station operating at a particular location within a region. The NM data may be compared to calibration database data, where the calibration database data represents calibration data measured within the geographical area of the region (operation **202**). The location of the mobile station may be estimated based on the comparison of the modified network measurement data and the calibration database data (operation **203**).

FIG. **3** illustrates a flow diagram **300** of a method to locate a mobile station in an indoor environment. Calibration data samples are collected in an outdoor environment (operation **301**). At least one attenuation variable may be applied to the calibration data sample to simulate an indoor environment (operation **302**). The modified network measurement data sample may be applied to a mobile station location algorithm (operation **303**). The mobile station may be then located in the indoor environment based on the mobile station location algorithm implementing the at least one modified calibration sample (operation **304**).

FIG. **4** illustrates a flow diagram **400** of a method to locate a mobile station. NM data may be obtained to represent at least one network characteristic of the mobile station's serving base station and at least one second network characteristic of at least one of the mobile station's neighboring base stations (operation **401**). The difference between the at least one first signal characteristic and the at least one second signal characteristic may be computed (operation **402**). At least one signal characteristic of the NM data may be adjusted based on the computed difference (operation **403**). The mobile station may be then located based on the modified network measurement data (operation **404**).

FIG. **5** illustrates a flow diagram **500** of a method to locate a mobile station. NM data may be obtained (operation **501**), which represents at least one first network characteristic of the mobile station's serving base station, and at least one second and third network characteristic of the mobile station's at least two neighboring base stations. It may be then determined which base station has the highest signal power at a particular location (operation **502**). The difference between the highest signal power at the particular location and the power levels at the particular location of the serving base station and the remaining neighboring base stations may be determined (operation **503**). At least one signal characteristic of the NM data may be adjusted based on the computed differences (operation **504**). The mobile station may then be located based on the modified NMR (operation **505**).

FIG. **6** illustrates a flow diagram **600** of a method to locate a mobile station. A NMR may be obtained (operation **601**), which represents at least one first signal characteristic of the mobile station's serving base station, and at least one second and third signal characteristics of the mobile station's at least two respective neighboring base stations. A difference may be computed between the at least one first signal characteristic of the mobile station's serving base station and the at least one second signal characteristic of at least one of the mobile station's neighboring base stations to determine a first solution (operation **602**). It may then be determined which base station has the highest signal power level at a particular location (operation **603**). The difference between the highest signal power and the power levels of the serving base station and the remaining neighboring base stations may be determined as a second solution (operation **604**). The neighboring base station having the lowest signal power level at the particular location may be determined (operation **605**). An average signal power level intermediary to the difference between the highest signal power level and the lowest signal power level may be determined as a third solution (operation **606**). It may then be determined which solution is a most optimal solution by comparing the three solutions (operation **607**). The signal characteristic of the NM data may then be adjusted based on the most optimal solution (operation **608**). The mobile station may then be located based on the adjusted NM data (operation **609**).

FIG. **7** illustrates an embodiment of the present subject matter. The method includes providing a database of previously-gathered calibration data for a predetermined region in a wireless network (operation **701**). The database may be a collection of data from uniform or non-uniform grids that contain network measurements with associated location estimates. Network measurement data may be then observed and measured typically by a mobile station or any other wireless device (operation **703**). The network measurement data may include received base station power and timing advance, as well as other network characteristics observable by a mobile station. The observed network measurement data may then be modified (operation **705**). This modification may include applying an attenuation function to some or all of the network measurement data or converting absolute values into relative values. The modification may be performed by a processor,

microprocessor or ASICS. The modified network measurement data may then be compared to the calibration database in order to determine the location of the mobile station (operation **707**). The comparison may be performed by a processor, microprocessor or ASICS.

FIG. **8** is another illustration of an embodiment of the present subject matter. A database of previously-gathered calibration data for a predetermined region in a wireless network may be provided (operation **801**). Observed network measurement data may be collected which includes a first signal characteristic from the mobile's serving transmitter (operation **803**). The observed network measurement data may be modified as a function of the first signal characteristic (operation **805**), for example the first signal characteristic may be received power and the modification may be a function of the relative value with respect to the received power. The modified network measurement data may be compared with the database of calibration data to determine the location of the mobile station (operation **807**)

FIG. **9** is an illustration of an embodiment of the present subject matter for determining a location of a mobile station. A database of calibration data for a region may be provided (**901**). Network measurement data from transmitters may be observed and collected including a signal characteristic from each of the transmitters (operation **903**). An average value for the signal characteristic among the transmitters may be determined (operation **905**). The average for the signal characteristic may be a weighted average. The observed network measurement data may be modified using the determined average value (operation **907**) and the modified network measurement data may be compared with the database of calibration data to determine the location of the mobile station (operation **909**)

FIG. **10** is an illustration of an embodiment of the present subject matter for determining a location of a mobile station. A database of previously-gathered outdoor calibration data for a predetermined region in a wireless network may be provided (operation **1001**). Network measurement data may be observed and collected (operation **1003**). The network measurement data may be compared with the database of calibration data to thereby determine a plurality of location estimates for the mobile station (operation **1005**). The location estimates may be derived using modified, unmodified, limited signal characteristics, several signal characteristics, etc. For each location estimate, a confidence measure may be determined (operation **1007**). A location may be determined based on the plurality of location estimates and their respective confidence measures (**1009**). For example, the location may be determined based on a weighted average, where the weights are directly proportional to the confidence measures.

The embodiments described above may be used in communication devices, such as, a base station, having varying configurations that include, but are not limited to: predetermined calibration data collected over varying terrain, different base station configurations, varying cellular communication protocols, etc.

While preferred embodiments of the present invention have been described, it is to be understood that the embodiments described are illustrative only and the scope of the invention is to be defined solely by the appended claims when accorded a full range of equivalents, many variations and modifications naturally occurring to those skilled in the art from a perusal hereof.

What is claimed is:

1. A method for determining a location of a mobile station, comprising:

providing a database of previously-gathered calibration data for a predetermined region in a wireless network, wherein said network includes a first transmitter and a second transmitter;

collecting observed network measurement data including a first signal characteristic from said first transmitter and a second signal characteristic from said second transmitter;

determining which of said first and second signal characteristics has a greater magnitude;

modifying said observed network measurement data using the greater magnitude signal characteristic; and

comparing said modified network measurement data with said database of calibration data to thereby determine the location of the mobile station.

2. The method of claim **1** wherein said database comprises previously-gathered calibration data for one or more non-uniform grid points within said region.

3. The method of claim **1** wherein said observed network measurement data includes data collected at the mobile station.

4. The method of claim **1** wherein said previously-gathered calibration data includes calibration data gathered at a predetermined calibration point within said region wherein said predetermined calibration point is not located within a structure.

5. The method of claim **4** wherein said observed network measurement data is collected at a mobile station located within a structure.

6. The method of claim **4** wherein said first signal characteristic is signal strength.

7. The method of claim **6** wherein said second signal characteristic is signal strength.

8. The method of claim **7** wherein the modifying of said calibration data uses a difference between said first or second signal characteristics.

9. The method of claim **7** wherein said first signal characteristic is signal strength of a control channel transmitted by said first transmitter and received by said mobile station.

10. The method of claim **9** wherein said second signal characteristic is signal strength of a control channel transmitted by said second transmitter and received by said mobile station.

11. The method of claim **1**, wherein the observed network measurement data includes received signal strength of said transmitters as said mobile station.

12. The method of claim **1** wherein said observed network measurement data includes a data set comprising:

$$[P_1, P_2 \ldots, P_n, TA]$$

where:

P_1 represents the signal strength of said first transmitter as measured at said mobile station,

P_2 represents a signal strength of said second transmitter as measured at said mobile station wherein $P_2 > P_1$

P_n, represents a signal strength of a nth transmitter as measured at said mobile station wherein $P_{2>Pn}$, and

TA represents a timing advance parameter;

and wherein said modified network measurement data includes a data set comprising:

$$[P_2-P_1, 0, P_2-P_n, TA]$$

where:

P_2-P_1 represents a difference between P_2 and P_1,

0 represents a difference between P_2 and P_2, and

P_2-P_n represents a difference between P_2 and P_n.

13. The method of claim **12** wherein said first transmitter is a serving transmitter for said mobile station and said second and third transmitters are neighboring transmitters.

14. The method of claim **12** wherein said third transmitter is not a member of said wireless network.

15. A method for determining a location of a mobile station, comprising:

providing a database of previously-gathered outdoor calibration data for a predetermined region in a wireless network;

collecting network measurement data;

comparing said network measurement data with said database of calibration data to thereby determine a plurality of location estimate of the mobile station

determining a confidence measure for each of the plurality of location estimates;

determining the location of the mobile station based on the plurality of location estimates and the respective confidence measures.

16. The method of claim **15**, wherein the step of determining the location based on the plurality of location estimates and the respective confidence measures comprises selecting the location estimate having the highest respective confidence measure as the location of the mobile station.

17. The method of claim **15**, wherein the step of determining the location based on the plurality of location estimates and their respective confidence measures comprises weighing the plurality location estimates based on their respective confidence measures and obtaining a weighted average as the location of the mobile.

18. The method of **15**, wherein the confidence measures comprises one or more of the group consisting of a pdf the Mahalanobis distance, and a distortion measure.

19. The method of claim **15**, wherein the step of collecting network propagation data further comprises modifying the network propagation data.

20. The method of claim **15**, wherein the step of comparing said network propagation data with said database of calibration data to thereby determine a plurality of location estimate of the mobile station, further comprises modifying said calibration data prior to the comparison.

21. The method of claim **20**, wherein the step of comparing said network propagation data with said database of calibration data to thereby determine a plurality of location estimate of the mobile station, further comprises modifying said calibration data prior to the comparison.

* * * * *

US007561104C1

(12) EX PARTE REEXAMINATION CERTIFICATE (10261st)

United States Patent

Alles et al.

(10) Number: US 7,561,104 C1

(45) Certificate Issued: Aug. 18, 2014

(54) **METHOD TO MODIFY CALIBRATION DATA USED TO LOCATE A MOBILE UNIT**

(75) Inventors: **Martin Alles**, Vienna, VA (US); **John Carlson**, Dulles, VA (US); **George Maher**, Herndon, VA (US); **Seleuk Mazlum**, Leesburg, VA (US)

(73) Assignee: **JPMorgan Chase Bank, N.A.**, New York, NY (US)

Reexamination Request:
No. 90/012,694, Sep. 24, 2012

Reexamination Certificate for:

Patent No.:	**7,561,104**
Issued:	**Jul. 14, 2009**
Appl. No.:	**12/026,333**
Filed:	**Feb. 5, 2008**

Related U.S. Application Data

(60) Provisional application No. 60/899,379, filed on Feb. 5, 2007.

(51) **Int. Cl.**
G01S 3/02 (2006.01)

(52) **U.S. Cl.**
USPC **342/451**; 342/457

(58) **Field of Classification Search**
None
See application file for complete search history.

(56) **References Cited**

To view the complete listing of prior art documents cited during the proceeding for Reexamination Control Number 90/012,694, please refer to the USPTO's public Patent Application Information Retrieval (PAIR) system under the Display References tab.

Primary Examiner — Angela M Lie

(57) **ABSTRACT**

A method of modifying calibration data used to geo-locate a mobile station located in an indoor environment is disclosed. When a mobile station is located indoors, the signal strength of signals received and/or transmitted by the mobile station have the tendency to be lower than the strength of the signals received by a mobile station located outdoors. As a result of these lower signal strengths, geo-location efforts which rely on signal strengths may result in unsatisfactory location accuracy. Modifying pre-existing calibration data obtained outdoors may provide a way to simulate indoor calibration data characteristics.

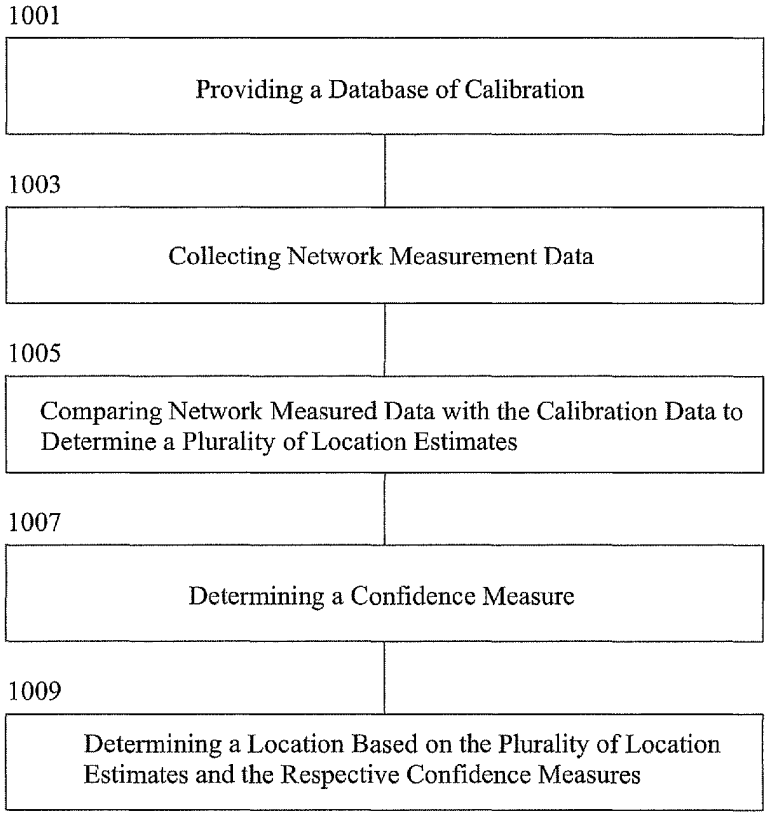

EX PARTE REEXAMINATION CERTIFICATE ISSUED UNDER 35 U.S.C. 307

THE PATENT IS HEREBY AMENDED AS INDICATED BELOW.

AS A RESULT OF REEXAMINATION, IT HAS BEEN DETERMINED THAT:

The patentability of claims **1-14** is confirmed.

Claims **15-21** are cancelled.

* * * * *