INSTALLATION & USER'S MANUAL

Showline

SL PAR 155 ZOOM
RGBW LED Luminaire

Showline Offices

Dallas
10911 Petal Street
Dallas, TX 75238
Tel: +1 214-647-7880
Fax: +1 214-647-8030

Auckland
19-21 Kawana Street
Northcote, Auckland 0627
New Zealand
Tel: +64 9 481 0100
Fax: +64 9 481 0101

Asia
Unit C, 14/F, Roxy Industrial Centre
No. 41-49 Kwai Cheong Road
Kwai Chung, N.T., Hong Kong
Tel: +852 2796 9786
Fax: +852 2798 6545

Europe
Rondweg zuid 85
Winterswijk 7102 JD
The Netherlands
Tel: +31 (0) 543-542516

www.philips.com/showline

The material in this manual is for information purposes only and is subject to change without notice. Showline assumes no responsibility for any errors or omissions which may appear in this manual. For comments and suggestions regarding corrections and/or updates to this manual, please contact your nearest Showline office.

El contenido de este manual es solamente para información y está sujeto a cambios sin previo aviso. Showline no asume responsabilidad por errores o omisiones que puedan aparecer. Cualquier comentario, sugerencia o corrección con respecto a este manual, favor de dirijirlo a la oficina de Showline más cercana.

Der Inhalt dieses Handbuches ist nur für Informationszwecke gedacht, Aenderungen sind vorbehalten. Showline uebernimmt keine Verantwortung für Fehler oder Irrtuemer, die in diesem Handbuch auftreten. Für Bemerkungen und Verbesserungsvorschlaege oder Vorschlaege in Bezug auf Korrekturen und/oder Aktualisierungen in diesem Handbuch, moechten wir Sie bitten, Kontakt mit der naechsten Showline-Niederlassung aufzunehmen.

Le matériel décrit dans ce manuel est pour information seulement et est sujet à changements sans préavis. La compagnie Showline n'assume aucune responsibilité sur toute erreur ou ommission inscrite dans ce manuel. Pour tous commentaires ou suggestions concernant des corrections et/ou les mises à jour de ce manuel, veuillez s'il vous plait contacter le bureau de Showline le plus proche.

Note: Information contained in this document may not be duplicated in full or in part by any person without prior written approval of Vari-Lite. Its sole purpose is to provide the user with conceptual information on the equipment mentioned. The use of this document for all other purposes is specifically prohibited.

Document Number: **SL PAR 155 ZOOM RGBW LED Luminaires Users**
Version as of: **10 December 2013**

SL PAR 155 ZOOM RGBW LED Luminaires Installation & User’s Manual
©2013 Vari-Lite. All rights reserved.

IMPORTANT INFORMATION

Warnings and Notices

When using electrical equipment, basic safety precautions should always be followed including the following:

a. **READ AND FOLLOW ALL SAFETY INSTRUCTIONS**.
b. Do not use outdoors.
c. Do not mount near gas or electric heaters.
d. Equipment should be mounted in locations and at heights where it will not readily be subjected to tampering by unauthorized personnel.
e. The use of accessory equipment not recommended by the manufacturer may cause an unsafe condition.
f. Do not use this equipment for other than intended use.
g. Refer service to qualified personnel.

SAVE THESE INSTRUCTIONS.

WARNING: You must have access to a main circuit breaker or other power disconnect device before installing any wiring. Be sure that power is disconnected by removing fuses or turning the main circuit breaker off before installation. Installing the device with power on may expose you to dangerous voltages and damage the device. A qualified electrician must perform this installation.

WARNING: Refer to National Electrical Code® and local codes for cable specifications. Failure to use proper cable can result in damage to equipment or danger to personnel.

WARNING: This equipment is intended for installation in accordance with the National Electric Code® and local regulations. It is also intended for installation in indoor applications only. Before any electrical work is performed, disconnect power at the circuit breaker or remove the fuse to avoid shock or damage to the control. It is recommended that a qualified electrician perform this installation.

Additional Resources for DMX512

For more information on installing DMX512 control systems, the following publication is available for purchase from the United States Institute for Theatre Technology (USITT), "Recommended Practice for DMX512: A Guide for Users and Installers, 2nd edition" (ISBN: 9780955703522). USITT Contact Information:

USITT
315 South Crouse Avenue, Suite 200
Syracuse, NY 13210-1844
Phone: 1.800.938.7488 or 1.315.463.6463
www.usitt.org

Showline Limited Two-Year Warranty

Showline offers a two-year limited warranty of its luminaires against defects in materials or workmanship from the date of delivery. A copy of Showline two-year limited warranty containing specific terms and conditions can be obtained by contacting your local Showline office.

Videndum Production Solutions, Inc. Ex. 1004
Page 1 of 44

TABLE OF CONTENTS

Showline Offices ... Inside Front Cover
IMPORTANT INFORMATION
Warnings and Notices ... 1
Additional Resources for DMX512 ... 1
Showline Limited Two-Year Warranty ... 1
TABLE OF CONTENTS
PREFACE
About this Manual ... 4
Included Items ... 4
Accessories ... 5
SL PAR 155 ZOOM RGBW LED Luminaire Power Input Cables (North American Models Only) ... 5
SL PAR 155 ZOOM RGBW LED Luminaire Accessories ... 5
SL PAR 155 ZOOM RGBW LED LUMINAIRE OVERVIEW
SL PAR 155 ZOOM RGBW LED Luminaire Components ... 6
Common Luminaire Components ... 6
LCD Display / Menu System ... 7
INSTALLATION AND SET UP
Power Requirements ... 8
AC Power Operation ... 8
Connecting Power ... 8
Connecting SL PAR 155 ZOOM RGBW LED Luminaires to AC Power ... 9
Connecting to the DMX512 Network ... 10
Mounting Luminaire ... 11
Truss / Hanging Applications ... 11
Floor Mounting ... 12
Setting / Adjusting Zoom ... 13
OPERATION AND PROGRAMMING
LCD Display and Menu System ... 14
LCD Display and Menu System Operation ... 14
SL PAR 155 ZOOM RGBW LED Luminaire Main Menu Options ... 15
Presets ... 15
Recalling or Editing Presets ... 15
Color Filter ... 16
Effects ... 16
Editing User Chases ... 17
Strobe/Timing ... 17
Settings/Security ... 17
Settings/General ... 18
Settings/Factory Default ... 18
Settings/DMX ... 19
Settings/Display ... 19
Lock Fixture ... 19
Password (PassPIN) ... 20
Status ... 20
Quick Selection Buttons ... 20
DMX Address ... 20
Harmonize Color Calibration ... 21
Dimming Curve Selection ... 22
Master / Slave Operational Mode ... 23
DMX CONTROL
SL PAR 155 ZOOM RGBW LED Luminaire DMX Mapping ... 24
16-Bit Mode ... 24
8-Bit Modes ... 26
HSIC Mode ... 29
DMX Control Channel Settings ... 30
DMX Timing Channel Detail ... 30

Videndum Production Solutions, Inc. Ex. 1004
Page 2 of 44

RDM PARAMETER IDS
SL PAR 155 ZOOM RGBW LED Luminaire RDM Parameter IDs 37
CLEANING AND CARE
Special Cleaning and Care Instructions 40
Front Lens Cleaning 40
Service and Maintenance 40
Accessories 41
TECHNICAL SPECIFICATIONS
Operational Specifications 42
Luminaire Dimensions 43

Videndum Production Solutions, Inc. Ex. 1004
Page 3 of 44

PREFACE

1. About this Manual

The document provides installation and operation instructions for the following products:

- SL PAR 155 ZOOM RGBW LED Luminaire

Please read all instructions before installing or using this product. *Retain this manual for future reference*. Additional product information and descriptions may be found on the product specification sheet.

Note: The SL PAR 155 ZOOM RGBW LED Luminaires are universal voltage 100 to 240 VAC (auto-ranging).

2. Included Items

Each SL PAR 155 ZOOM RGBW LED Luminaire includes the following items:

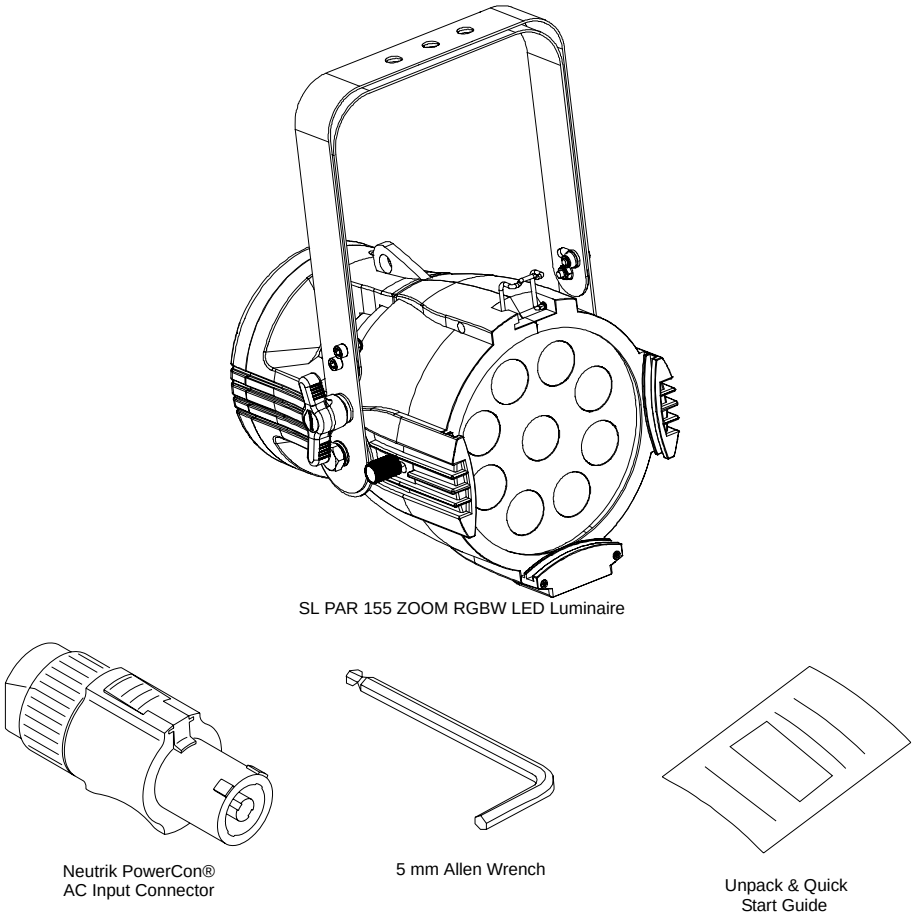

Figure 1: Included Items

Showline

3. Accessories

Contact your Authorized Showline Dealer for price and availability of all accessories for SL PAR 155 ZOOM RGBW LED Luminaires.

SL PAR 155 ZOOM RGBW LED Luminaire Power Input Cables (North American Models Only)

Part Number	Description
PC1BE	SL PAR 155 ZOOM RGBW LED Luminaire AC Power Input Cable (39 inches / 1 meter), Powercon with Bare End* (*Note, user supplies and installs own AC input connector)
PC1GP	SL PAR 155 ZOOM RGBW LED Luminaire AC Power Input Cable (39 inches / 1 meter), Powercon with Stagepin Connector
PC1GTL	SL PAR 155 ZOOM RGBW LED Luminaire AC Power Input Cable (39 inches / 1 meter), Powercon with Twistlock Connector
PC1GR	SL PAR 155 ZOOM RGBW LED Luminaire AC Power Input Cable (39 inches / 1 meter), Powercon with Edison Connector
PC3BE	SL PAR 155 ZOOM RGBW LED Luminaire AC Power Input Cable (9.8 Feet / 3 meter), Powercon with Bare End* (*Note, user supplies and installs own AC input connector)
PC8BE	SL PAR 155 ZOOM RGBW LED Luminaire AC Power Input Cable (26 Feet / 8 meter), Powercon with Bare End* (*Note, user supplies and installs own AC input connector)
PC8GR	SL PAR 155 ZOOM RGBW LED Luminaire AC Power Input Cable (26 Feet / 8 meter), Powercon with Edison Connector

SL PAR 155 ZOOM RGBW LED Luminaire Accessories

Part Number	Description
MC	Mega Claw, Black, Anodized
SC	Molded Yoke C-Clamp
HC	Light Weight Half Coupler
82003	Safety Cable

Videndum Production Solutions, Inc. Ex. 1004
Page 5 of 44

SL PAR 155 ZOOM RGBW LED LUMINAIRE OVERVIEW

1. SL PAR 155 ZOOM RGBW LED Luminaire Components

Common Luminaire Components

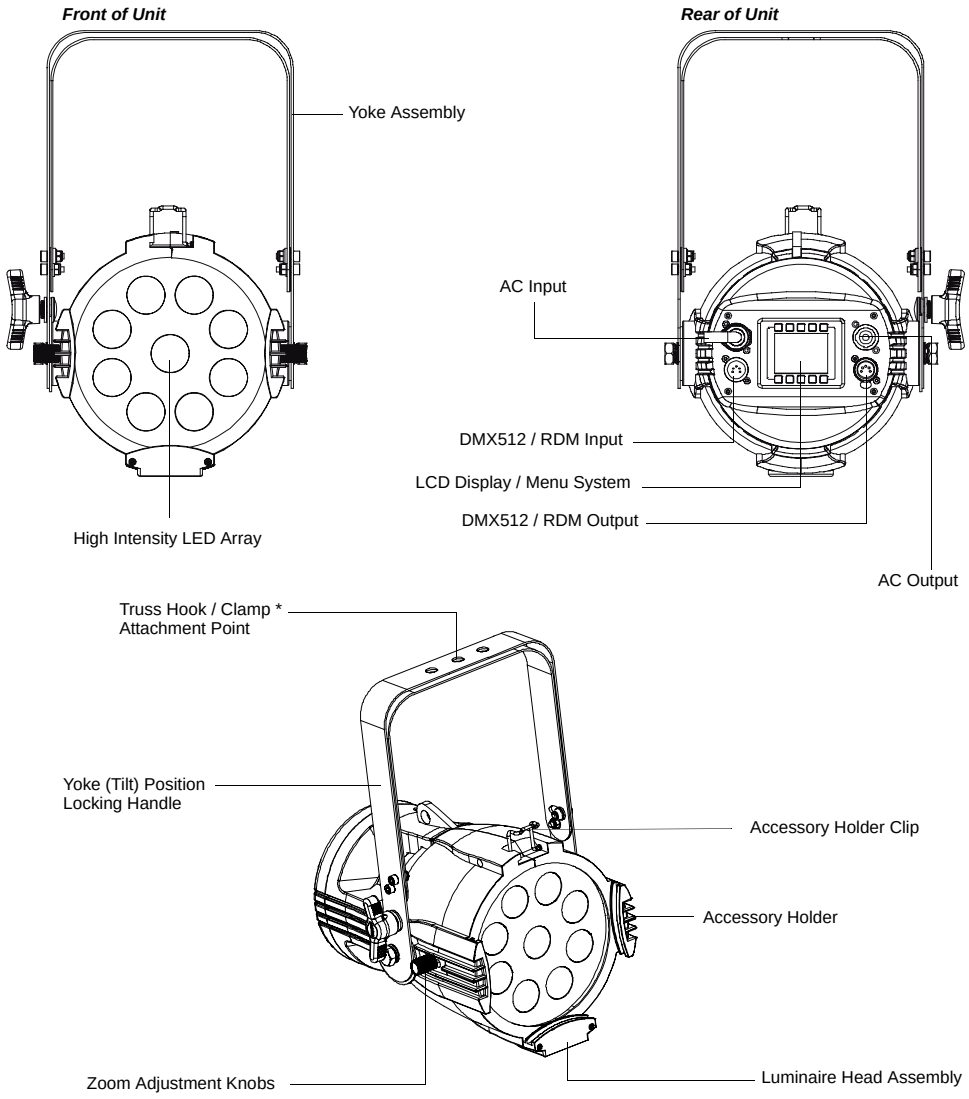

* Truss hooks and clamps are sold separately.

Figure 2: SL PAR 155 ZOOM RGBW LED Luminaire Common Components

Showline

Videndum Production Solutions, Inc. Ex. 1004
Page 6 of 44

LCD Display / Menu System

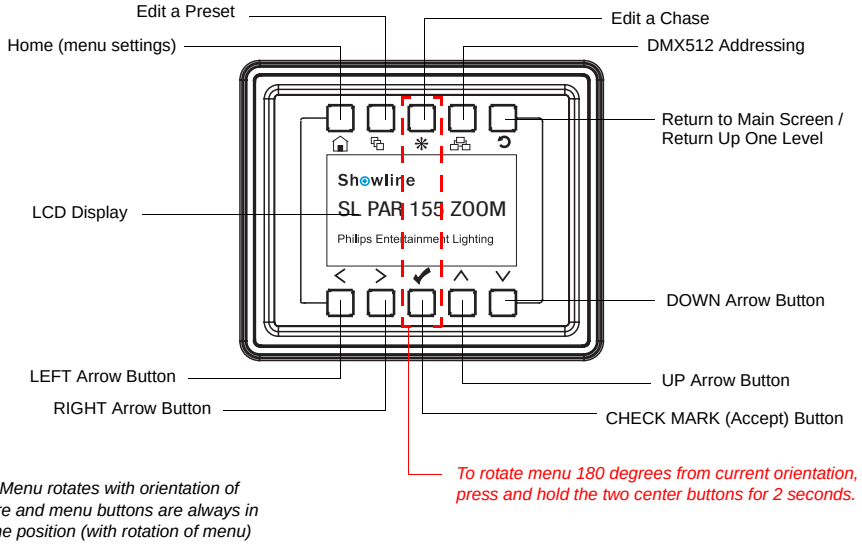

NOTE: *Menu rotates with orientation of luminaire and menu buttons are always in the same position (with rotation of menu)*

Figure 3: LCD Display & Menu System

Note: For Menu operation and programming details, refer to "LCD Display and Menu System Operation" on page 14.

Videndum Production Solutions, Inc. Ex. 1004
Page 7 of 44

INSTALLATION AND SET UP

1. Power Requirements

The SL PAR 155 ZOOM RGBW LED Luminaires operate on AC input voltages from 100 to 240 VAC.

WARNING! SL PAR 155 ZOOM RGBW LED Luminaires do not contain an ON/OFF switch. Always disconnect power input cable to completely remove power from the luminaire when not in use.

AC Power Operation

When connected to an AC source, the unit operates on 100 to 240 volts AC (+/- 10%, auto-ranging). The luminaire contains an auto-ranging power supply. Each luminaire can draw up to 150 Watts.

WARNING! Maximum amount of units that may be daisy-chained is (A) 16 units at 120VAC (20 Amps) or (B) 32 units at 240VAC (20 Amps). Refer to Table 1 for detailed information at various voltages.

Table 1: SL PAR 155 ZOOM RGBW LED Luminaire Voltage (VAC) vs. Current*

Voltage (AC)	Total Current (A)	Maximum number of units that can be linked together*
100	1.50	13
110	1.36	14
120	1.25	16
130	1.15	17
140	1.07	18
150	1.00	20
160	0.94	21
170	0.88	22

Voltage (AC)	Total Current (A)	Maximum number of units that can be linked together*
180	0.83	24
190	0.79	25
200	0.75	26
210	0.70	28
220	0.68	29
230	0.65	30
240	0.63	32

WARNING! *These figures are based on the Maximum Allowable Input Current of 20 Amps (and the maximum power supply limit of 150 Watts). Do not overload circuits!

Note: For wiring of AC input connector, refer to "Connecting SL PAR 155 ZOOM RGBW LED Luminaires to AC Power" on page 9.

2. Connecting Power

Units can be powered in one of two ways:

- Direct connection to a AC power source using an AC input cable. AC input cable accessories are described in "SL PAR 155 ZOOM RGBW LED Luminaire Power Input Cables (North American Models Only)" on page 5. For wiring of AC input connector, refer to "Connecting SL PAR 155 ZOOM RGBW LED Luminaires to AC Power" on page 9.
- Connection from the AC output of another SL PAR 155 ZOOM RGBW LED Luminaire. When using this method, it is very important not to connect any other type of equipment device.

WARNING! Only connect other SL PAR 155 ZOOM RGBW LED Luminaires to the AC Output (Thru) connector of a SL PAR 155 ZOOM RGBW LED Luminaire.

Videndum Production Solutions, Inc. Ex. 1004
Page 8 of 44

Connecting SL PAR 155 ZOOM RGBW LED Luminaires to AC Power

If you did not order an AC input cable accessory with your unit, Table 2 describes how to connect power to your SL PAR 155 ZOOM RGBW LED Luminaire. Field wiring of the SL PAR 155 ZOOM RGBW LED Luminaire is straight forward. A total of 3 wires/conductors need to be brought to the unit. The following wiring scheme is required:

Table 2: SL PAR 155 ZOOM RGBW LED Luminaire AC Input Connections

Wire Color	Purpose
Brown	Main / Line (100 to 240VAC)
Blue	Neutral
Green/Yellow	Ground (Earth)

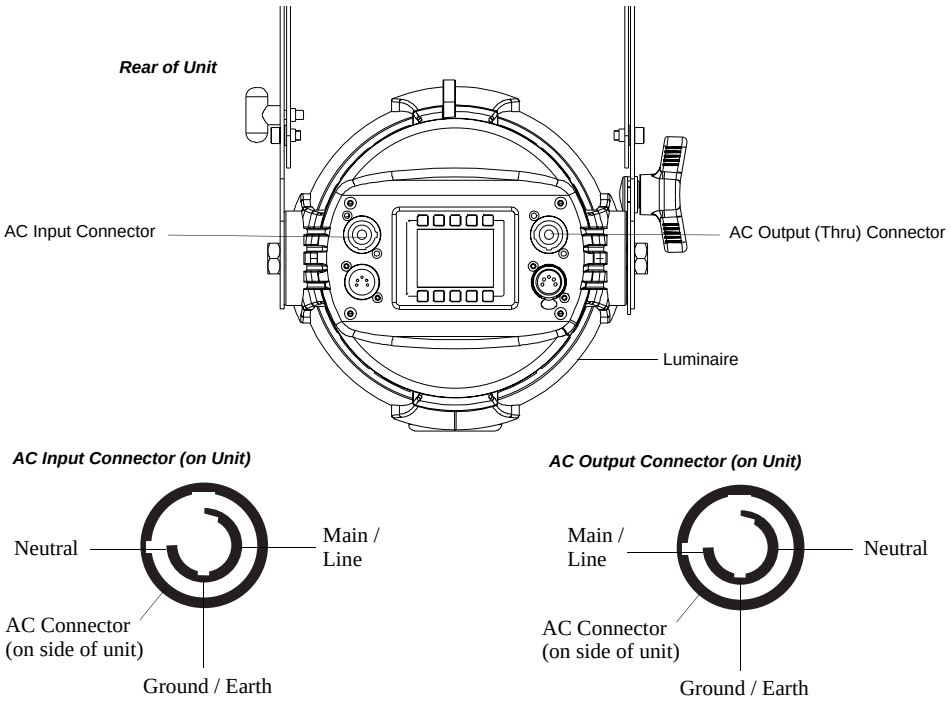

Figure 4: SL PAR 155 ZOOM RGBW LED Luminaire AC Input & Output Connections

CAUTION: In the event the AC input cable of this luminaire is damaged, it must be replaced, by the user, with an approved cable through an Authorized Showline Dealer or Service Center.

Videndum Production Solutions, Inc. Ex. 1004
Page 9 of 44

3. Connecting to the DMX512 Network

Basic DMX512 installation consists of connecting multiple SL PAR 155 ZOOM RGBW LED Luminaires together (up to 32 luminaires) in "daisy-chain" fashion. A cable runs from the control console (or DMX512 control source) to the DMX connector on the first SL PAR 155 ZOOM RGBW LED Luminaire. Another cable runs from the other DMX connector on the first unit to a DMX connector on the next SL PAR 155 ZOOM RGBW LED Luminaire (or DMX512 device to be controlled).

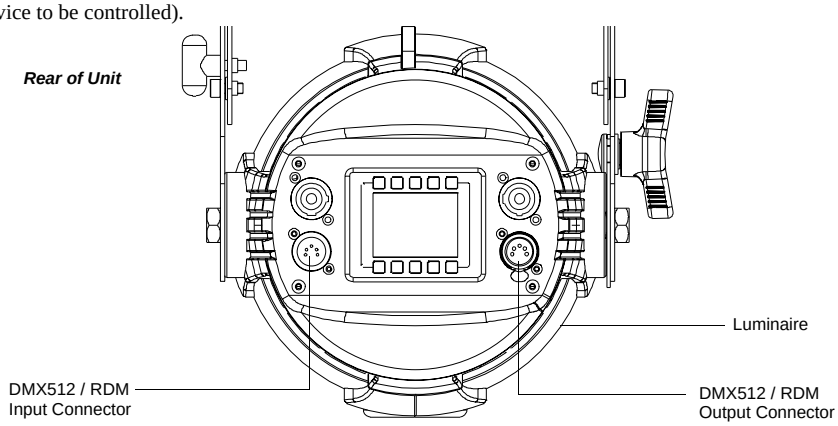

Figure 5: SL PAR 155 ZOOM RGBW LED Luminaire DMX512 Input / Output Connections

Note: For more information on DMX512 networking and systems, refer to "Additional Resources for DMX512" on page 1. For SL PAR 155 ZOOM RGBW LED Luminaire DMX Mapping, refer to "DMX CONTROL" on page 24.

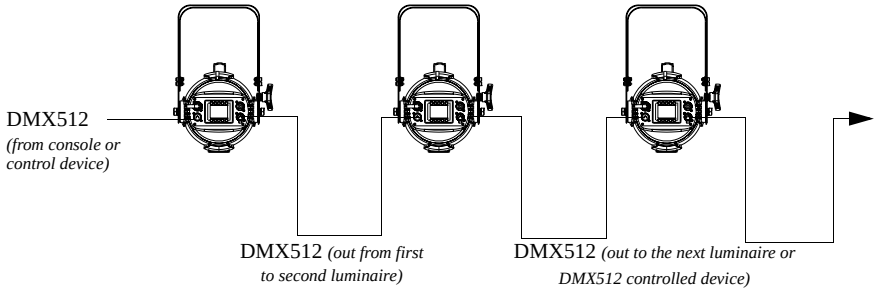

DMX512 Connections

DMX512 Signal	XLR Pin
Common (Drain)	1
DMX512 -	2
DMX512 +	3

Note: Remaining pins on each connector are not used.

Figure 6: SL PAR 155 ZOOM RGBW LED Luminaire - DMX512 Connections

Showline

Videndum Production Solutions, Inc. Ex. 1004
Page 10 of 44

4. Mounting Luminaire

Truss / Hanging Applications

The SL PAR 155 ZOOM RGBW LED Luminaire is provided with the ability to hang via truss hooks, clamps, etc. (sold separately). Simply attach hook, clamp, etc. to the SL PAR 155 ZOOM RGBW LED Luminaire enclosure assembly in the provided M13 holes. It is recommended (and may be required by local and national safety codes) to use and install a safety cable (sold separately) as illustrated in Figure 7. When hanging the fixture, be sure to leave enough space around the luminaire to allow proper, uninterrupted airflow for cooling and positioning. refer to "Luminaire Dimensions" on page 43 for spacing (dimensional) requirements.

Note: Mounting hooks, clamps, safety cables, etc. are sold separately or by others. For mounting accessories available for this product, refer to "Accessories" on page 5.

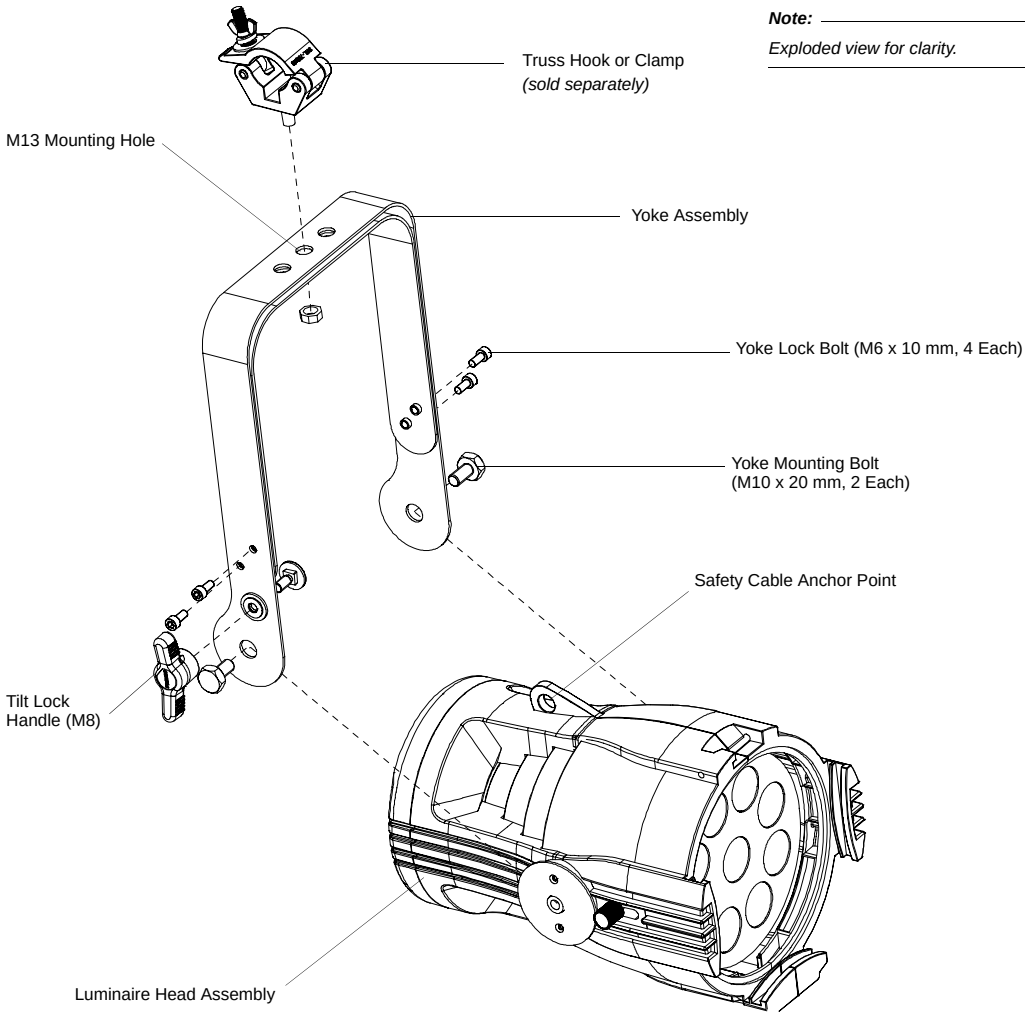

Figure 7: Luminaire and Yoke Components

Videndum Production Solutions, Inc. Ex. 1004
Page 11 of 44

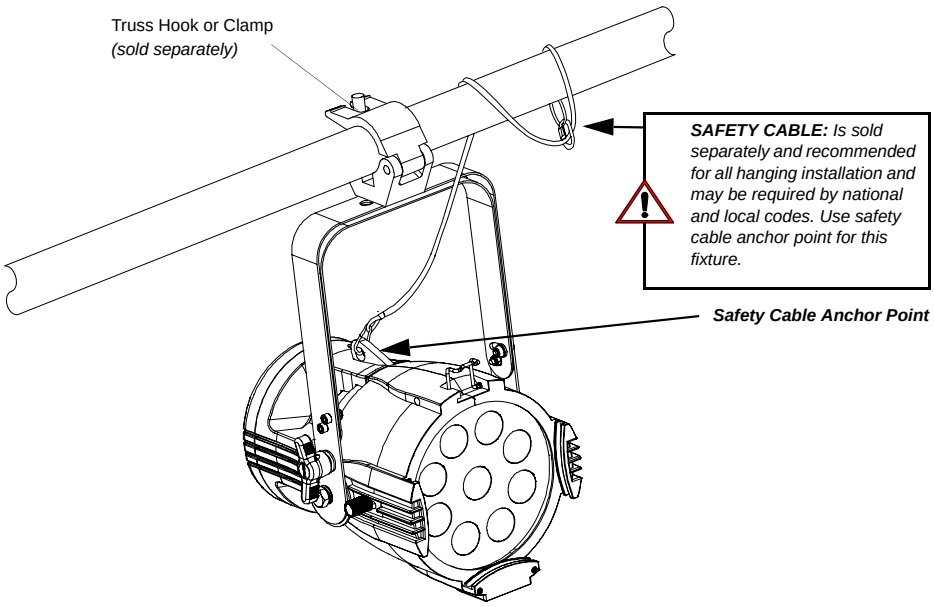

Figure 8: Mounting the Fixture - Hanging Applications

Floor Mounting

The SL PAR 155 ZOOM RGBW LED Luminaire is designed to sit directly on its yoke assembly in a floor installation application. When used in this type of application, using the provided 5 mm Allen wrench, loosen the locking allen-head screw securing the inner portion of the yoke assembly and pivot out (as shown in Figure 9). Retighten the allen-head screw to secure in place. Be sure to leave enough space around the luminaire to allow proper, uninterrupted airflow for cooling.

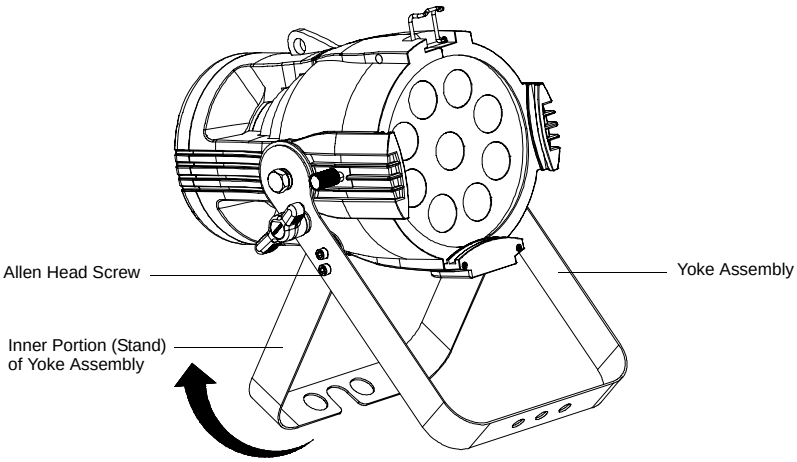

Figure 9: Floor Mounting

Videndum Production Solutions, Inc. Ex. 1004
Page 12 of 44

Setting / Adjusting Zoom

The SL PAR 155 ZOOM RGBW LED Luminaire has a user-adjustable, manual zoom. The zoom is easily changed by loosening both the zoom adjustment knobs on each side of the luminaire head and sliding the zoom mechanism backwards or forwards as desired. Once desired zoom is set, simply hand-tighten the two zoom knobs. *Do not over tighten or tighten with a tool!*

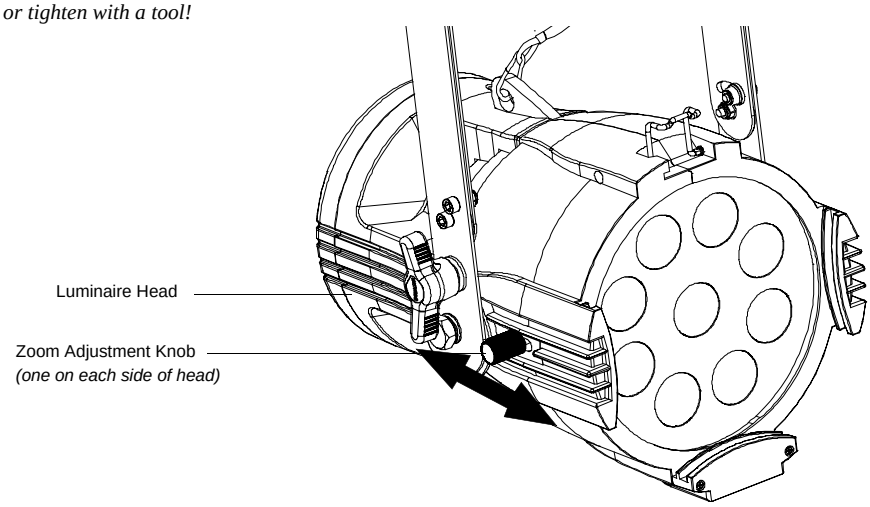

Figure 10: Zoom Adjustment

Note: The zoom range for this luminaire is 8 to 40 degrees. The movement of the zoom mechanism is a very short travel distance. The narrow output is when the adjustment knobs are closest to the yoke and the widest is when they are closest to the front of the unit.

Videndum Production Solutions, Inc. Ex. 1004
Page 13 of 44

OPERATION AND PROGRAMMING

1. LCD Display and Menu System

The SL PAR 155 ZOOM RGBW LED Luminaire's LCD Display and Menu System provides local control for accessing the following fixture's settings:

- Presets (Standard and User Defined)
- Color Filters
- Effects (Chases - preloaded and user defined)
- Strobe / Timing
- Fixture Settings
- Fixture Lockout (to prevent changes)
- Password Setting
- Current Fixture Operational Status
- Setting the DMX512 Address

Note: If there are multiple luminaires in a system, changes would need to be made at each LCD Menu as desired. For SL PAR 155 ZOOM RGBW LED Luminaire menu structure, see "SL PAR 155 ZOOM RGBW LED Luminaire Main Menu Options" on page 15.

Upon power up, the LCD will display the main screen showing the product type/name. If DMX is enabled, the programmed address will appear after power up.

2. LCD Display and Menu System Operation

The LCD Display Menu system consists of several categories. Use the Menu Buttons to access and make changes to the menu items. When the desired menu item is reached, press the desired Menu Button to display the menu options and to navigate and configure the menu options as required.

To navigate and access menu settings/selections:

Step 1. Make sure unit is powered and turned on.

Step 2. Press the desired button (as shown in **Figure 11 on page 15**) to access menu categories.

Step 3. Use UP | DOWN | LEFT | RIGHT arrow buttons to navigate through the various options and settings.

Step 4. Make changes as desired.

Step 5. Press CHECK MARK (OK) button to accept changes.

Showline

Videndum Production Solutions, Inc. Ex. 1004
Page 14 of 44

.

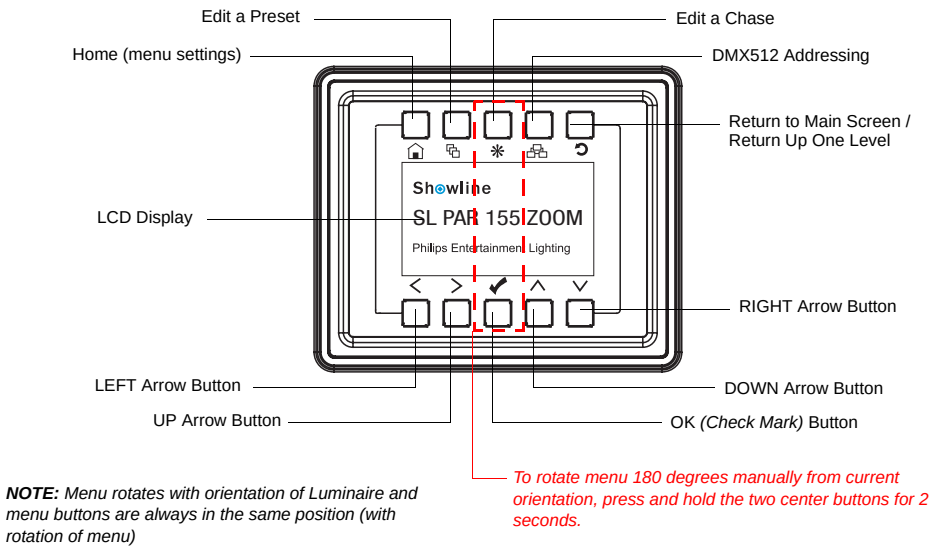

Figure 11: LCD Display and Menu System

3. SL PAR 155 ZOOM RGBW LED Luminaire Main Menu Options

Presets

Presets are stored values of the luminaire's LED settings that can be recalled via the menu system or DMX. You can customize up to 31 presets via the menu system.

Recalling or Editing Presets

To recall or edit a preset:

Step 1. Select Preset from the main menu or from the Preset shortcut key.

Step 2. The top left field indicates the current preset or Off, when this field is selected (highlighted in blue), use the left and right buttons to scroll through all presets

Step 3. If you wish to edit the preset, use the Up and Down keys to scroll through the parameters. Once a parameter is selected, use the left and right arrow buttons to make adjustments.

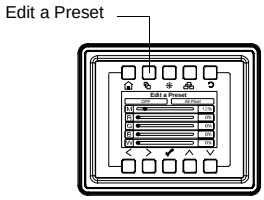

Notes:

- If security features are enabled, the Up and Down arrows will have no effect. See "Settings/Security" on page 17.
- Depending on the DMX map set assigned the DMX menu, different either RGBW or HSIC parameters will be available.

Step 4. Once all values are adjusted as desired, press the Check Mark button to save the preset.

Step 5. The Save Preset Menu option will appear. Use the left and right arrow buttons to select the preset number to save to.

Note: This function allows you to save your current edits to a different preset number than you began editing. This is helpful to create copies of existing presets.

Videndum Production Solutions, Inc. Ex. 1004
Page 15 of 44

Step 6. Press the Check Mark button to save the preset. You will be asked to confirm your saving operation.

Step 7. The preset is now saved and can be recalled via the menu or DMX.

Color Filter

Color filters are 43 factory made colors that utilize the Harmonize Color Calibration system (refer to "Harmonize Color Calibration" on page 21 for more information). They can be recalled via the menu system or DMX.

To recall a color filter from the menu:

Step 1. Select Color Filter from the main menu

Step 2. The top indicates the current color filter or Off, when this field is selected (highlighted in blue), use the left and right buttons to scroll through all color filters.

Step 3. Use the Up and Down arrow keys to toggle to the Master Intensity field. Use the Left and Right arrow keys to adjust the Master Intensity.

Step 4. The menu will display a graphical indication of the color along with the color name.

Note: The color filter will remain ON until you select a preset, chase, other color filter or send the unit DMX.

Effects

Effects are chases stored values of the luminaire's LED settings that can be recalled via the menu system or DMX. There are 10 factory defined chases and eight user adjustable chases. You can adjust the master intensity, speed, and fade values for any of the 18 chases.

Use the Up and Down buttons to select parameters and the Left and Right buttons to assign the different general fixture settings. When finished, press the Check button to exit the menu level. The adjustable parameters are described in Table 3.

Table 3: Effects Parameters

Parameter	Description
User Chase / Built-in Chase	Select from the 18 different chases.
Master Intensity	Adjust the master intensity for ALL chases.
Total Steps	Displays the total steps used by the chase. This field is not editable.
Speed	The total time each step of the chase will be recalled.
Fade	The percentage of the time assigned by the speed that is crossfaded between steps.

Videndum Production Solutions, Inc. Ex. 1004
Page 16 of 44

Editing User Chases

Eight User chases can be further customized to create different effects on the fixture. To edit a User Chase, first use the up and down arrows to scroll to the Edit User Chase field and then press the Check Mark button. The Edit User Chase window will be displayed:

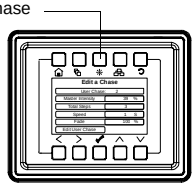

Use the Up and Down buttons to select parameters and the Left and Right buttons to assign the different general fixture settings. When finished, press the Check button to exit the menu level.

To edit and save a Step:

Step 1. Select Edit Step or New Step from the Edit User Chase menu.

Step 2. The top left field indicates the preset or color filter to be used for the step. When set to OFF no preset or color filter is to be used. Use the left and right buttons to scroll through all presets and color filters.

Step 3. Use the Up and Down keys to scroll through the output parameters. Once a parameter is selected, use the left and right arrow buttons to make adjustments.

Notes:

- If security features are enabled, the Up and Down arrows will have no effect. See "Settings/Security" on page 17.
- Depending on the DMX map set assigned the DMX menu, different either RGBW or HSIC parameters will be available.

Step 4. Once all values are adjusted as desired, press the Check Mark button to return to the Edit User Chase screen.

Return to Main Menu button

Step 5. Continue editing steps as needed. When complete, press the Return to Main Menu button or up one level *(as shown to the right)*. to exit the Edit User Chase window.

Step 6. The user chase is now saved and can be recalled via the menu or DMX.

Strobe/Timing

The Strobe/Timing menu allows you to assign strobe and timing values from the menu system. These settings are instantly applied to any active Preset, Color filter, or chase.

Use the Up and Down buttons to select parameters and the Left and Right buttons to adjust the currently selected parameter. The adjustable parameters are described in Table 3.

Table 4: Strobe / Timing Parameters

Parameter	Description
Master Intensity	Overall fixture output intensity level.
Strobe: X	Strobe mode and rate value settings following DMX map (see SL PAR 155 ZOOM RGBW LED Luminaire DMX Mapping for details).
Duration	The time each strobe flash remains ON.
Intensity Timing	The time used to change intensity values when running a chase.
Color Timing	The time used to change color values when running a chase.

Settings/Security

All Showline fixtures have a multiple level locking feature. This allows you to configure the fixture and allow different menu access to multiple users. The menu system can be locked instantly or assigned to power on to a particular lock level. You can assign three different 4-digit PIN (personal identification number) codes to each unlock specific levels of functionality within the menu system.

Anytime the fixture is locked, each PIN code will unlock all functions except the pertaining features assigned via the security level.

Note: The Level 3 PIN will always unlock all functions.

Videndum Production Solutions, Inc. Ex. 1004
Page 17 of 44

Table 5: Security Lock Levels

Lock Level	Menu Functions Affected
Level 1	Edit Presets, Edit Chases, and Settings Menu
Level 2	Settings Menu
Level 3	All

Use the Up and Down buttons to select security PIN codes. Press the Check button and then use Left and Right and Up Down buttons to assign the pin code. Press the Check button to save the new PIN code.

The Power-Up Level parameter assigns a lock level to the fixture when power is applied. Use the Up and Down buttons to select the Power-Up Level, and then use the Left and Right buttons to select the Power-up Level option.

Table 6: PIN Level Parameters

Parameter	Description
Enter Pass PIN	Enter a PIN code matching the level codes assigned in the Settings/Security menu to toggle the current security level.
Level 1 PIN	Edit the PIN code used to toggle the Level 1 security.
Level 2 PIN	Edit the PIN code used to toggle the Level 2 security.
Level 3 PIN	Edit the PIN code used to toggle the Level 3 security.
Power-up Level	Select the security level to default to when the fixture is powered ON. • Disable PIN will disable all security functions. • Locked will lock all functions.

Settings/General

Use the Up and Down buttons to select parameters and the Left and Right buttons to assign the different general fixture settings. When finished, press the Check button to exit the menu level. The adjustable parameters are described in Table 7.

Table 7: General Level Parameters

Parameter	Description
Power-Up	Select the action of the fixture when the unit is powered ON. You can select from Off, Last Set, Color filters, presets, and chases.
Mode	Select either Master/Slave (see Master / Slave Operational Mode for more information).
Dim Response	Select Normal, Incandescent, or Reduced dimming response. • Normal: Fixture LEDs dim with a normal response. • Incandescent: Fixture LED's dim with an incandescent emulation response. The response to dimming commands will be slightly delayed at lower intensities. • Reduced: The response to dimming commands will be calculated with a smaller algorithm to provide emulation with other manufacturer's products.
Dimming Curve	Select one of four dimming curve choices (see Dimming Curve Selection for more information).
Calibration	Toggle Harmonize Color Calibration on or off (see Harmonize Color Calibration for more information).
Fan Control	Select Auto of Off fan operation (see DMX Control Channel Settings for more information).

Settings/Factory Default

Factory default menu settings can be recalled through this menu option. You can select if you wish to overwrite the user edited preset and chases.

Use the Up and Down buttons to select parameters and the Left and Right buttons to assign the different settings. When finished, press the Check button to exit the menu level. The adjustable parameters are described in Table 8.

Videndum Production Solutions, Inc. Ex. 1004
Page 18 of 44

Table 8: Factory Default Parameters

Parameter	Description
Protected	• No - all menu items are able to be restored to factory defaults. • Preset & Chase - user edited Presets and Chases are not able to be restored to factory defaults.
Load Factory	• No - no action. • Yes - restore to factory default menu settings.

Settings/DMX

DMX configuration options are available in the DMX menu.

Use the Up and Down buttons to select parameters and the Left and Right buttons to assign the fixture's DMX settings. When finished, press the Check button to exit the menu level. The adjustable parameters are described in Table 9.

Table 9: DMX Setting Parameters

Parameter	Description
DMX Enable	• Enable - Fixture will respond to DMX commands/signals. • Disable - Fixture will ignore DMX commands/signals.
Address	Assigns the fixture's DMX start address.
Map	Selects the DMX map for the fixture to use (see DMX CONTROL section for more information).
When no DMX	Selects the action of the fixture when the unit is powered ON and not receiving DMX. • Off - Turn off all LED output. • Last Action - restore the last menu action. • Power-up - follow the power-up value in the settings menu. • Hold - continue with the last DMX values received.

Settings/Display

Options of the fixture's LCD display can be adjusted in the Display menu.

Use the Up and Down buttons to select parameters and the Left and Right buttons to assign the fixture's DMX settings. When finished, press the Check button to exit the menu level. The adjustable parameters are described in Table 10.

Table 10: LCD Display Parameters

Parameter	Description
Flip Display	• Yes - The display will be inverted. • No - The display will not be inverted. • Auto - The display will automatically invert depending upon fixture orientation.
Off Time	Assign a time for the display to automatically turn off after the last button press. A value of ON will leave the display on indifferently.
Language Select	English is the only language currently supported.

Lock Fixture

You can lock all fixture functions, requiring a PIN code to access the menu functions. When you select this menu item, you are asked to confirm that you wish to lock the fixture. Once locked, all menu items can only be accessed by entering one of the three PIN codes assigned in the Settings/Security menu. (see "Settings/Security" on page 17 for more information). The PIN code used to unlock the fixture will only unlock the functionality assigned to that particular PIN code.

Note: When the fixture is powered off, the Lock Fixture function will be disabled. To assign fixture power-up security refer to (see "Settings/Security" on page 17 for more information).

Videndum Production Solutions, Inc. Ex. 1004
Page 19 of 44

Password (PassPIN)

The Password menu item will display an Enter PassPIN dialog box. Use the Up Down Left Right buttons to enter a PIN code matching the codes assigned in the Settings/Security menu to toggle the current security level.

Status

The Status screen displays the current value of the master intensity and LED intensities for each pixel control of a fixture. The number of pixels will vary depending upon fixture type. Use the Up Down Left Right arrows to scroll through the different pixels and view their levels.

- The last Status item displayed shows the RDM UID and current Firmware Version.
- Press the Check Mark button to exit the Status screen.

Quick Selection Buttons

The Showline menu system includes four quick selection buttons on the top of the menu. These keys provide direct access to common functions and act as shortcuts to main menu items as described in Table 10.

Table 11: Quick Select Buttons

Quick Select Button	Description
	Main Menu Refer to Settings/General for more information.
	Edit a Preset Refer to Recalling or Editing Presets for more information.
	Effects / Edit a Chase Refer to Effects and Editing User Chases for more information.
	DMX Start Address Refer to DMX Address for more information.
	Return to Main Menu / Return Up a Menu Item

DMX Address

You can display and edit the current DMX start address for the fixture by pressing the Quick Select button on the top of the menu system (as shown right). The current DMX start address will be display in large digits.

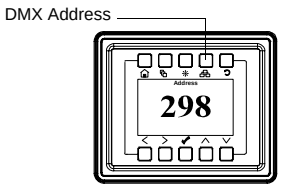

To edit the DMX start address:

Step 1. Press the Check Mark button to begin the DMX start address editing. The last digit will change to a blue color.

Step 2. Use the UP and Down arrows to change the value of the currently selected digit.

Step 3. Use the Left and Right arrows to select another digit to adjust.

Step 4. Press the Check Mark button to save the new DMX Start Address.

Showline

Videndum Production Solutions, Inc. Ex. 1004
Page 20 of 44

4. Harmonize Color Calibration

Harmonize is a proprietary, advanced LED color matching system, consisting of 3 correction modules: RGB, RGBW and Cool White/Warm White. Every Showline fixture undergoes rigorous testing to provide you with consistent control of color and intensity as well as output of the highest quality.

When enabled either via DMX or the fixture's menu, the Harmonize technology will ensure that colors match from fixture-to-fixture and pixel-to-pixel. As the Harmonize system matches Showline products, they will all operate in the same color space. Use the Harmonize system when perfect color matching is an essential requirement.

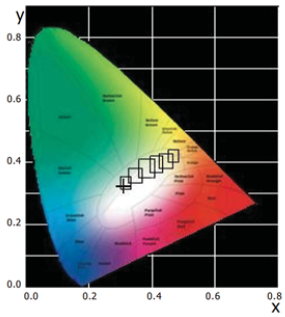

Note: When attempting to achieve the most saturated colors possible, disable the Harmonize color calibration.

Videndum Production Solutions, Inc. Ex. 1004
Page 21 of 44

5. Dimming Curve Selection

Through the menu, you are able to select one of four dimming curves:

- Linear Curve
- PL_Curve
- S_Curve
- Square Curve

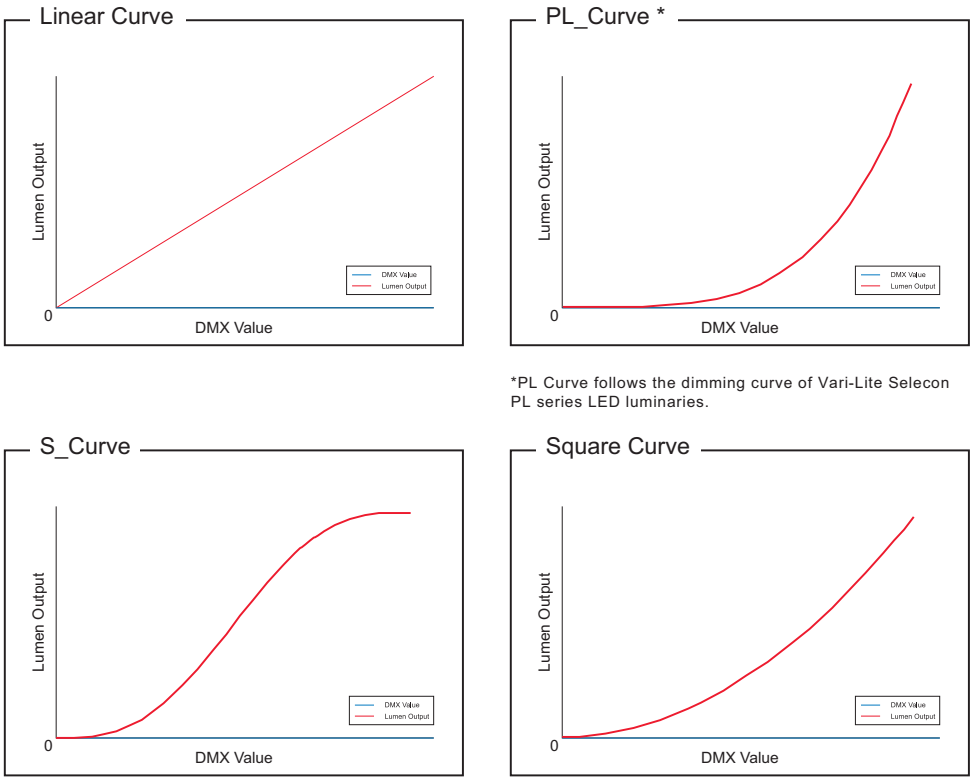

Figure 12: SL PAR 155 ZOOM RGBW LED Luminaire Dimmer Curves

Showline

6. Master / Slave Operational Mode

The Master / Slave Operational Mode allows one SL PAR 155 ZOOM RGBW LED Luminaire to act as the "Master" unit and all other connected units are controlled by this unit. When a unit is set to "Slave" mode, it will only listen to and follow any commands sent from a "Master" unit. Only one "Master" unit is allowed in this type of operation.

To setup a master / slave network:

Step 1. Set the first device in the DMX512 chain to Master Mode through the unit's menu system.

Step 2. Set all other connected units to Slave Mode.

Step 3. The master unit can be controlled via DMX512, RDM or through standalone operation (self-contained network utilizing on-board effects). The slave units will mimic the master unit's operation in all cases. All user programmed presets and chases recalled on the master will automatically play on the slaves without having to program the slaves.

Note: For more information on DMX512 networking and systems, refer to "Additional Resources for DMX512" on page 1. For SL PAR 155 ZOOM RGBW LED Luminaire DMX Mapping, refer to "DMX CONTROL" on page 24.

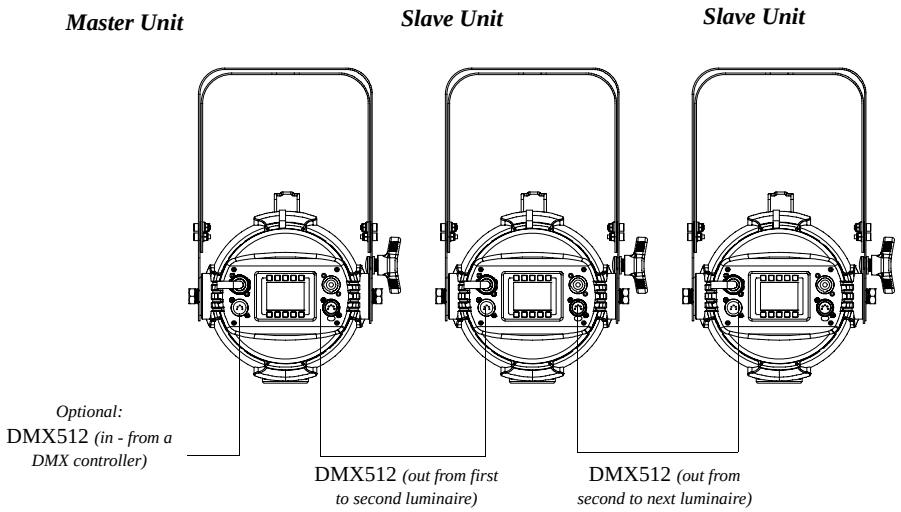

Figure 13: SL PAR 155 ZOOM RGBW LED Luminaire - Master / Slave Configuration

Videndum Production Solutions, Inc. Ex. 1004
Page 23 of 44

DMX CONTROL

This section contains information for operating the luminaire using DMX control in 16-bit, 8-Bit, or HSIC (Hue, Saturation, Intensity and Color Correction) modes. For Menu options and detailed information, see "LCD Display and Menu System" on page 14.

Note: These tables assume a DMX start address of 1. When a different starting address is used, this address becomes channel 1 function and other functions follow in sequence.

1. SL PAR 155 ZOOM RGBW LED Luminaire DMX Mapping

16-Bit Mode

Table 12 provides DMX channel mapping of all DMX512 control values when the SL PAR 155 ZOOM RGBW LED Luminaire is in 16-bit DMX512 mode (as set by the luminaire's menu system).

Table 12: SL PAR 155 ZOOM RGBW LED Luminaire DMX Channel Mapping (16-Bit Mode)

DMX Channel	Parameter	Range DMX	Range%	**Default** - *recommended console default values*	Description
1	Master Intensity - High	0 - 65535	0 - 100%	0	16-bit control for Intensity of LED settings.
2	Master Intensity - Low				
3	Color Presets	0 - 255	0 - 100%	0	*Select presets, variable color filters or chases as follows:* Channel OFF (disabled) DMX 0 - 4 Preset 0 (OFF) DMX 5 - 6 Preset 1 DMX 7 - 8 Preset 2 DMX 9 - 10 Preset 3 DMX 11 - 12 Preset 4 DMX 13 - 14 Preset 5 DMX 15 - 16 Preset 6 DMX 17 - 18 Preset 7 DMX 19 - 20 Preset 8 DMX 21 - 22 Preset 9 DMX 23 - 24 Preset 10 DMX 25 - 26 Preset 11 DMX 27 - 28 Preset 12 DMX 29 - 30 Preset 13 DMX 31 - 32 Preset 14 DMX 33 - 34 Preset 15 DMX 35 - 36 Preset 16 DMX 37 - 38 Preset 17 DMX 39 - 40 Preset 18 DMX 41 - 42 Preset 19 DMX 43 - 44 Preset 20 DMX 45 - 46 Preset 21 DMX 47 - 48 Preset 22 DMX 49 - 50 Preset 23 DMX 51 - 52 Preset 24 DMX 53 - 54 Preset 25 DMX 55 - 56 Preset 26 DMX 57 - 58 Preset 27 DMX 59 - 60 Preset 28 DMX 61 - 62 Preset 29 DMX 63 - 64 Preset 30 DMX 65 - 66 Preset 31 DMX 67 - 68

Showline

Videndum Production Solutions, Inc. Ex. 1004
Page 24 of 44

Table 12: SL PAR 155 ZOOM RGBW LED Luminaire DMX Channel Mapping (16-Bit Mode)

3	Color Presets	0 - 255	0 - 100%	0	*Select presets, variable color filters or chases as follows:* CF_0_Color OFF DMX 69 - 70 CF_1_White 10000K DMX 71 - 72 CF_2_White 8000K DMX 73 - 74 CF_3_White 6500K DMX 75 - 76 CF_4_White 5600K DMX 77 - 78 CF_5_White 5000K DMX 79 - 80 CF_6_White 4500K DMX 81 - 82 CF_7_White 4000K DMX 83 - 84 CF_8_White 3200K DMX 85 - 86 CF_9_White 3000K DMX 87 - 88 CF_10_White 2700K DMX 89 - 90 CF_11_Moroccan Pink DMX 91 - 92 CF_12_Pink DMX 93 - 94 CF_13_Flesh Pink DMX 95 - 96 CF_14_Bright Rose DMX 97 - 98 CF_15_Follies Pink DMX 99 - 100 CF_16_Fuchsia Pink DMX 101 - 102 CF_17_Surprise Pink DMX 103 - 104 CF_18_Congo Blue DMX 105 - 106 CF_19_Blue DMX 107 - 108 CF_20_Virgin Blue DMX 109 - 110 CF_21_Midnight Maya DMX 111 - 112 CF_22_Double C.T Blue DMX 113 - 114 CF_23_Slate Blue DMX 115 - 116 CF_24_Regal Blue DMX 117 - 118 CF_25_Full C.T Blue DMX 119 - 120 CF_26_Steel Blue DMX 121 - 122 CF_27_Lighter Blue DMX 123 - 124 CF_28_Cyan DMX 125 - 126 CF_29_Marine Blue DMX 127 - 128 CF_30_Soft Green DMX 129 - 130 CF_31_Moss Green DMX 131 - 132 CF_32_Green DMX 133 - 134 CF_33_Fem Green DMX 135 - 136 CF_34_JAS Green DMX 137 - 138 CF_35_Pale Green DMX 139 - 140 CF_36_Spring Yellow DMX 141 - 142 CF_37_Yellow DMX 143 - 144 CF_38_Deep Amber DMX 145 - 146 CF_39_Chrome Orange DMX 147 - 148 CF_40_Orange DMX 149 - 150 CF_41_Magenta DMX 151 - 152 CF_42_Flame Red DMX 153 - 154 CF_43_Purple DMX 155 - 156 Rotate CW Fast -> Slow DMX 157 - 171 Rotate ACW Slow -> Fast DMX 172 - 186 Random Color Fast -> Slow DMX 187 - 201 Chase1 DMX 202 - 204 Chase2 DMX 205 - 207 Chase3 DMX 208 - 210 Chase4 DMX 211 - 213 Chase5 DMX 214 - 216 Chase6 DMX 217 - 219 Chase7 DMX 220 - 222 Chase8 DMX 223 - 225 Chase9 DMX 226 - 228 Chase10 DMX 229 - 231 User Chase1 DMX 232 - 234 User Chase2 DMX 235 - 237 User Chase3 DMX 238 - 240 User Chase4 DMX 241 - 243 User Chase5 DMX 244 - 246 User Chase6 DMX 247 - 249 User Chase7 DMX 250 - 252 User Chase8 DMX 253 - 255

Videndum Production Solutions, Inc. Ex. 1004
Page 25 of 44

Table 12: SL PAR 155 ZOOM RGBW LED Luminaire DMX Channel Mapping (16-Bit Mode)

4	Strobe	0 - 255	0 - 100%	0	*Controls strobe operations as follows:* Open = DMX 0 - 2 Closed = DMX 3 - 5 Slow Rand = DMX 6 - 7 Med Rand = DMX 8 - 10 Fast Rand = DMX 11 - 12 Strobe Range = DMX 13 - 127 (fastest) Pulse + Slow Rand = DMX 128 - 129 Pulse + Med Rand = DMX 130 - 131 Pulse + Fast Rand = DMX 132 - 133 Pulse + Range = DMX 134 - 191 Pulse - Slow Rand = DMX 192 - 193 Pulse - Med Rand = DMX 194 - 195 Pulse - Fast Rand = DMX 196 - 197 Pulse - Range = DMX 198 - 255
5	Duration	0 - 255	0 - 100%	0	Strobe Duration is 0 - 85 0 = DMX 0 1 = DMX 1 - 3 x = (DMX Value-1)/3+1 85 = DMX 253-255
6	Intensity Timing	0 - 255	0 - 100%	255	Allows for timing control of intensity. Channel should default to 255 for smoothest actions using console and/or manual fades.
7	Color Timing	0 - 255	0 - 100%	255	Allows for timing control of colors. Channel should default to 255 for smoothest actions using console and/or manual fades.
8	Control	0 - 255	0 - 100%	0	*Control Channel functions of the SL Series products. Set control channel value from 0 then turn to desired action. Hold value for at least 5 seconds. Then restore control channel value to 0 without any scaling.* Default Setting on Console = DMX 0-4 DIM Response_Normal = DMX 5 - 9 DIM Response_Incandescent = DMX 10 - 14 Dimming Curve_Linear = DMX 30 - 34 Dimming Curve_Square = DMX 35- 39 Dimming Curve_S-Curve = DMX 40 - 44 Dimming Curve_PL-Curve = DMX 45 - 49 Calibration_OFF = DMX 70 - 74 Calibration_ON = DMX 75 - 79 Fan_Auto = DMX 80 - 84 Fan_Off = DMX 85 - 89 Reserved (Future use) = DMX 90 - 250
9	Red - High Byte	0 - 65535	0 - 100%	0	16-bit control for of Red LEDs 0 to full.
10	Red - Low Byte				
11	Green - High Byte	0 - 65535	0 - 100%	0	16-bit control for of Green LEDs 0 to full.
12	Green - Low Byte				
13	Blue - High Byte	0 - 65535	0 - 100%	0	16-bit control for of Blue LEDs 0 to full.
14	Blue - Low Byte				
15	White - High Byte	0 - 65535	0 - 100%	0	16-bit control for of White LEDs 0 to full.
16	White - Low Byte				

8-Bit Modes

The SL PAR 155 ZOOM RGBW LED Luminaire offers two 8-bit DMX control modes. Below is a summary of each mode:

- ***Enhanced 8-Bit Mode***: Table 13 on page 27 provides DMX channel mapping of all DMX512 control values when the SL PAR 155 ZOOM RGBW LED Luminaire is in ***Enhanced 8-bit DMX512 Mode*** (as set by the luminaire's menu system).
- ***Simple 8-Bit Mode:*** Table 14 on page 29 provides DMX channel mapping of all DMX512 control values when the SL PAR 155 ZOOM RGBW LED Luminaire is in ***Simple 8-Bit DMX512 Mode*** (as set by the luminaire's menu system).

Videndum Production Solutions, Inc. Ex. 1004
Page 26 of 44

Enhanced 8-Bit Mode

Table 13: SL PAR 155 ZOOM RGBW LED Luminaire DMX Channel Mapping (Enhanced 8-Bit Mode)

DMX Channel	Parameter	Range DMX	Range%	**Default** - *recommended console default values*	Description
1	Master Intensity	0 - 255	0 - 100%	0	8-bit control for Intensity of LED settings.
2	Color Presets	0 - 255	0 - 100%	0	*Select presets, variable color filters or chases as follows:* Channel OFF (disabled) DMX 0 - 4 Preset 0 (OFF) DMX 5 - 6 Preset 1 DMX 7 - 8 Preset 2 DMX 9 - 10 Preset 3 DMX 11 - 12 Preset 4 DMX 13 - 14 Preset 5 DMX 15 - 16 Preset 6 DMX 17 - 18 Preset 7 DMX 19 - 20 Preset 8 DMX 21 - 22 Preset 9 DMX 23 - 24 Preset 10 DMX 25 - 26 Preset 11 DMX 27 - 28 Preset 12 DMX 29 - 30 Preset 13 DMX 31 - 32 Preset 14 DMX 33 - 34 Preset 15 DMX 35 - 36 Preset 16 DMX 37 - 38 Preset 17 DMX 39 - 40 Preset 18 DMX 41 - 42 Preset 19 DMX 43 - 44 Preset 20 DMX 45 - 46 Preset 21 DMX 47 - 48 Preset 22 DMX 49 - 50 Preset 23 DMX 51 - 52 Preset 24 DMX 53 - 54 Preset 25 DMX 55 - 56 Preset 26 DMX 57 - 58 Preset 27 DMX 59 - 60 Preset 28 DMX 61 - 62 Preset 29 DMX 63 - 64 Preset 30 DMX 65 - 66 Preset 31 DMX 67 - 68 CF_0_Color OFF DMX 69 - 70 CF_1_White 10000K DMX 71 - 72 CF_2_White 8000K DMX 73 - 74 CF_3_White 6500K DMX 75 - 76 CF_4_White 5600K DMX 77 - 78 CF_5_White 5000K DMX 79 - 80 CF_6_White 4500K DMX 81 - 82 CF_7_White 4000K DMX 83 - 84 CF_8_White 3200K DMX 85 - 86 CF_9_White 3000K DMX 87 - 88 CF_10_White 2700K DMX 89 - 90 CF_11_Moroccan Pink DMX 91 - 92 CF_12_Pink DMX 93 - 94 CF_13_Flesh Pink DMX 95 - 96 CF_14_Bright Rose DMX 97 - 98 CF_15_Follies Pink DMX 99 - 100 CF_16_Fuchsia Pink DMX 101 - 102 CF_17_Surprise Pink DMX 103 - 104 CF_18_Congo Blue DMX 105 - 106 CF_19_Blue DMX 107 - 108 CF_20_Virgin Blue DMX 109 - 110 CF_21_Midnight Maya DMX 111 - 112 CF_22_Double C.T Blue DMX 113 - 114 CF_23_Slate Blue DMX 115 - 116 CF_24_Regal Blue DMX 117 - 118 CF_25_Full C.T Blue DMX 119 - 120 CF_26_Steel Blue DMX 121 - 122 CF_27_Lighter Blue DMX 123 - 124 CF_28_Cyan DMX 125 - 126 CF_29_Marine Blue DMX 127 - 128 CF_30_Soft Green DMX 129 - 130 CF_31_Moss Green DMX 131 - 132 CF_32_Green DMX 133 - 134 CF_33_Fem Green DMX 135 - 136 CF_34_JAS Green DMX 137 - 138 CF_35_Pale Green DMX 139 - 140

Table 13: SL PAR 155 ZOOM RGBW LED Luminaire DMX Channel Mapping (Enhanced 8-Bit Mode)

2	Color Presets	0 - 255	0 - 100%	0	*Select presets, variable color filters or chases as follows:* CF_36_Spring Yellow DMX 141 - 142 CF_37_Yellow DMX 143 - 144 CF_38_Deep Amber DMX 145 - 146 CF_39_Chrome Orange DMX 147 - 148 CF_40_Orange DMX 149 - 150 CF_41_Magenta DMX 151 - 152 CF_42_Flame Red DMX 153 - 154 CF_43_Purple DMX 155 - 156 Rotate CW Fast -> Slow DMX 157 - 171 Rotate ACW Slow -> Fast DMX 172 - 186 Random Color Fast -> Slow DMX 187 - 201 Chase1 DMX 202 - 204 Chase2 DMX 205 - 207 Chase3 DMX 208 - 210 Chase4 DMX 211 - 213 Chase5 DMX 214 - 216 Chase6 DMX 217 - 219 Chase7 DMX 220 - 222 Chase8 DMX 223 - 225 Chase9 DMX 226 - 228 Chase10 DMX 229 - 231 User Chase1 DMX 232 - 234 User Chase2 DMX 235 - 237 User Chase3 DMX 238 - 240 User Chase4 DMX 241 - 243 User Chase5 DMX 244 - 246 User Chase6 DMX 247 - 249 User Chase7 DMX 250 - 252 User Chase8 DMX 253 - 255
3	Strobe	0 - 255	0 - 100%	0	*Controls strobe operations as follows:* Open = DMX 0 - 2 Closed = DMX 3 - 5 Slow Rand = DMX 6 - 7 Med Rand = DMX 8 - 10 Fast Rand = DMX 11 - 12 Strobe Range = DMX 13 - 127 (fastest) Pulse + Slow Rand = DMX 128 - 129 Pulse + Med Rand = DMX 130 - 131 Pulse + Fast Rand = DMX 132 - 133 Pulse + Range = DMX 134 - 191 Pulse - Slow Rand = DMX 192 - 193 Pulse - Med Rand = DMX 194 - 195 Pulse - Fast Rand = DMX 196 - 197 Pulse - Range = DMX 198 - 255
4	Duration	0 - 255	0 - 100%	0	Strobe Duration is 0 - 85 0 = DMX 0 1 = DMX 1 - 3 x = (DMX Value-1)/3+1 85 = DMX 253-255
5	Timing	0 - 255	0 - 100%	255	Allows for timing control of intensity and color parameters. Channel should default to 255 for smoothest actions using console and/or manual fades.
6	Control	0 - 255	0 - 100%	0	*Control Channel functions of the SL Series products. Set control channel value from 0 then turn to desired action. Hold value for at least 5 seconds. Then restore control channel value to 0 without any scaling.* Default Setting on Console = DMX 0-4 DIM Response_Normal = DMX 5 - 9 DIM Response_Incandescent = DMX 10 - 14 Dimming Curve_Linear = DMX 30 - 34 Dimming Curve_Square = DMX 35- 39 Dimming Curve_S-Curve = DMX 40 - 44 Dimming Curve_PL-Curve = DMX 45 - 49 Calibration_OFF = DMX 70 - 74 Calibration_ON = DMX 75 - 79 Fan_Auto = DMX 80 - 84 Fan_Off = DMX 85 - 89 Reserved (Future use) = DMX 90 - 250
7	Red	0 - 255	0 - 100%	0	8-bit control of Red LEDs.
8	Green	0 - 255	0 - 100%	0	8-bit control of Green LEDs.
9	Blue	0 - 255	0 - 100%	0	8-bit control of Blue LEDs.
10	White	0 - 255	0 - 100%	0	8-bit control of White LEDs.

Videndum Production Solutions, Inc. Ex. 1004
Page 28 of 44

Simple 8-Bit Mode

Table 14: SL PAR 155 ZOOM RGBW LED Luminaire DMX Channel Mapping (Simple 8-Bit Mode)

DMX Channel	Parameter	Range DMX	Range%	**Default** - *recommended console default values*	Description
1	Master Intensity	0 - 255	0 - 100%	0	8-bit control for Intensity of LED settings.
2	Strobe	0 - 255	0 - 100%	0	*Controls strobe operations as follows:* Open = DMX 0 - 2 Closed = DMX 3 - 5 Slow Rand = DMX 6 - 7 Med Rand = DMX 8 - 10 Fast Rand = DMX 11 - 12 Strobe Range = DMX 13 - 127 (fastest) Pulse + Slow Rand = DMX 128 - 129 Pulse + Med Rand = DMX 130 - 131 Pulse + Fast Rand = DMX 132 - 133 Pulse + Range = DMX 134 - 191 Pulse - Slow Rand = DMX 192 - 193 Pulse - Med Rand = DMX 194 - 195 Pulse - Fast Rand = DMX 196 - 197 Pulse - Range = DMX 198 - 255
3	Red	0 - 255	0 - 100%	0	8 bit control of Red LEDs from 0 to full.
4	Green	0 - 255	0 - 100%	0	8 bit control of Green LEDs from 0 to full.
5	Blue	0 - 255	0 - 100%	0	8 bit control of Blue LEDs from 0 to full.
6	White	0 - 255	0 - 100%	0	8 bit control of White LEDs from 0 to full.

HSIC Mode

Table 15 provides DMX channel mapping of all DMX512 control values when the SL PAR 155 ZOOM RGBW LED Luminaire is in HSIC (Hue, Saturation, Intensity, and Color Correction) DMX512 mode (as set by the luminaire's menu system).

Table 15: SL PAR 155 ZOOM RGBW LED Luminaire DMX Channel Mapping (HSIC Mode)

DMX Channel	Parameter	Range DMX	Range%	**Default** - *recommended console default values*	Description
1	Master Intensity	0 - 255	0 - 100%	0	8-bit control for Intensity of LED settings.
2	Strobe	0 - 255	0 - 100%	0	*Controls strobe operations as follows:* Open = DMX 0 - 2 Closed = DMX 3 - 5 Slow Rand = DMX 6 - 7 Med Rand = DMX 8 - 10 Fast Rand = DMX 11 - 12 Strobe Range = DMX 13 - 127 (fastest) Pulse + Slow Rand = DMX 128 - 129 Pulse + Med Rand = DMX 130 - 131 Pulse + Fast Rand = DMX 132 - 133 Pulse + Range = DMX 134 - 191 Pulse - Slow Rand = DMX 192 - 193 Pulse - Med Rand = DMX 194 - 195 Pulse - Fast Rand = DMX 196 - 197 Pulse - Range = DMX 198 - 255
3	Duration	0 - 255	0 - 100%	0	Strobe Duration is 0 - 85 0 = DMX 0 1 = DMX 1 - 3 x = (DMX Value-1)/3+1 85 = DMX 253-255
4	Timing	0 - 255	0 - 100%	255	Allows for timing control of intensity and color parameters. Channel should default to 255 for smoothest actions using console and/or manual fades.

Videndum Production Solutions, Inc. Ex. 1004
Page 29 of 44

Table 15: SL PAR 155 ZOOM RGBW LED Luminaire DMX Channel Mapping (HSIC Mode)

5	Control	0 - 255	0 - 100%	0	*Control Channel functions of the SL Series products. Set control channel value from 0 then turn to desired action. Hold value for at least 5 seconds. Then restore control channel value to 0 without any scaling.* Default Setting on Console = DMX 0-4 DIM Response_Normal = DMX 5 - 9 DIM Response_Incandescent = DMX 10 - 14 Dimming Curve_Linear = DMX 30 - 34 Dimming Curve_Square = DMX 35- 39 Dimming Curve_S-Curve = DMX 40 - 44 Dimming Curve_PL-Curve = DMX 45 - 49 Calibration_OFF = DMX 70 - 74 Calibration_ON = DMX 75 - 79 Fan_Auto = DMX 80 - 84 Fan_Off = DMX 85 - 89 Reserved (Future use) = DMX 90 - 250
6	Hue - High Byte	0 - 65535	0 - 100%	0	16-Bit control of Hue 0 - 359 Degrees
7	Hue - Low Byte				
8	Saturation	0 - 255	0 - 100%	0	8-bit control for Saturation.
9	Intensity	0 - 255	0 - 100%	0	8-bit control for Intensity.
10	CCT	0 - 255	0 - 100%	0	Variable control of correlated color temperature (CCT) from: Channel OFF (disabled) DMX 0 - 5 2700K - 6500K. DMX 6 - 255

2. DMX Control Channel Settings

Table 10 provides details regarding control channel operation and settings. The information is applicable to each of the DMX modes: 16-bit, Enhanced 8-bit, and HSIC.

Table 16: DMX Control Channel Settings

Parameter	Description
Dim Response Normal	Fixture LEDs dim with a normal response.
Dim Response Incandescent	Fixture LED's dim with an incandescent emulation response. The response to dimming commands will be slightly delayed at lower intensities.
Dimming Curve Linear	Applies a linear control of the output of the fixture based on the DMX values on the Intensity Control Channels. See Dimming Curve Selection for additional information.
Dimming Curve Square	Applies a square law control of the output of the fixture based on the DMX values on the Intensity Control Channels. See Dimming Curve Selection for additional information.
Dimming Curve S-Curve	Applies S-Curve control of the output of the fixture based on the DMX values on the Intensity Control Channels. See Dimming Curve Selection for additional information.
Dimming Curve PL-Curve	Applies a dimming curve that follows the Vari-Lite Selecon PL series LED Luminaires control of the output of the fixture based on the DMX values on the Intensity Control Channels. See Dimming Curve Selection for additional information.
Calibration OFF	Toggle Harmonize Color Calibration off. See Harmonize Color Calibration for additional information.
Calibration ON	Toggle Harmonize Color Calibration on. See Harmonize Color Calibration for additional information.
Fan Auto	Fixture fans come on as needed and will still vary in speed, but will not exceed the factory set minimal noise limit.
Fan Off	Fixture fans will remain off in all circumstances and the fixture will automatically reduce LED output levels if LED temperatures rise above factory settings.

3. DMX Timing Channel Detail

Timing channel control improves the timed moves of certain groups of parameters. The SL PAR 155 ZOOM RGBW LED Luminaire provides timing channels in 16-bit mode (one for intensity time and one for color time) and one timing channel in 8-bit (color and intensity timing combined). The luminaire uses its timing channel value to calculate a smooth continuous operation for a given time and transition.

Guidelines:

- Timing channels support time values from zero to 60 minutes.

Videndum Production Solutions, Inc. Ex. 1004
Page 30 of 44

- To use a timing channel instead of console timing, it is recommended to set the timing channel to the desired value and set cue and/or console cue fade time to zero. A combination of time controls can produce unexpected results.
- The default value setting in the profile should be 255 (proportional control) to allow smooth operation when using console timing.
- A zero value will give the fastest operation, however, without any smoothing. Long console crossfades may appear "steppy".

Refer to "DMX Timing Channel Detail" for more information.

Table 17: SL PAR 155 ZOOM RGBW LED Luminaire Timing Channel Detail

% Value	DMX	= Seconds *(unless noted)*
0	0	0 (Full Speed)
	1	0.2
	2	0.4
1	3	0.6
	4	0.8
2	5	1
	6	1.2
	7	1.4
3	8	1.6
	9	1.8
4	10	2
	11	2.2
	12	2.4
5	13	2.6
	14	2.8
6	15	3
	16	3.2
	17	3.4
7	18	3.6
	19	3.8
8	20	4
	21	4.2
	22	4.4
9	23	4.6
	24	4.8
10	25	5
	26	5.2
	27	5.4
11	28	5.6
	29	5.8
	30	6
12	31	6.2
	32	6.4
13	33	6.6
	34	6.8
	35	7.0
14	36	7.2
	37	7.4
15	38	7.6
	39	7.8
	40	8
16	41	8.2

Videndum Production Solutions, Inc. Ex. 1004
Page 31 of 44

Table 17: SL PAR 155 ZOOM RGBW LED Luminaire Timing Channel Detail

% Value	DMX	= Seconds *(unless noted)*
	42	8.4
17	43	8.6
	44	8.8
	45	9
18	46	9.2
	47	9.4
19	48	9.6
	49	9.8
	50	10
20	51	10.2
	52	10.4
	53	10.6
21	54	10.8
	55	11
22	56	11.2
	57	11.4
	58	11.6
23	59	11.8
	60	12
24	61	12.2
	62	12.4
	63	12.6
25	64	12.8
	65	13
26	66	13.2
	67	13.4
	68	13.6
27	69	13.8
	70	14
28	71	14.2
	72	14.4
	73	14.6
29	74	14.8
	75	15
30	76	15.2
	77	15.4
	78	15.6
31	79	15.8
	80	16
	81	16.2
32	82	16.4
	83	16.6
33	84	16.8
	85	17
	86	17.2
34	87	17.4
	88	17.6
35	89	17.8
	90	18
	91	18.2
36	92	18.4

Videndum Production Solutions, Inc. Ex. 1004
Page 32 of 44

Table 17: SL PAR 155 ZOOM RGBW LED Luminaire Timing Channel Detail

% Value	DMX	= Seconds *(unless noted)*
	93	18.6
37	94	18.8
	95	19
	96	19.2
38	97	19.4
	98	19.6
39	99	19.8
	100	20
	101	21
40	102	22
	103	23
	104	24
41	105	25
	106	26
42	107	27
	108	28
	109	29
43	110	30
	111	31
44	112	32
	113	33
	114	34
45	115	35
	116	36
46	117	37
	118	38
	119	39
47	100	40
	121	41
48	122	42
	123	43
	124	44
49	125	45
	126	46
	127	47
50	128	48
	129	49
51	130	50
	131	51
	132	52
52	133	53
	134	54
53	135	55
	136	56
	137	57
54	138	58
	139	59
55	140	60
	141	61
	142	62
56	143	63

Table 17: SL PAR 155 ZOOM RGBW LED Luminaire Timing Channel Detail

% Value	DMX	= Seconds *(unless noted)*
	144	64
57	145	65
	146	66
	147	67
58	148	68
	149	69
59	150	70
	151	71
	152	72
60	153	73
	154	74
	155	75
61	156	76
	157	77
62	158	78
	159	79
	160	80
63	161	81
	162	82
64	163	83
	164	84
	165	85
65	166	86
	167	87
66	168	88
	169	89
	170	90
67	171	91
	172	92
68	173	93
	174	94
	175	95
69	176	96
	177	97
	178	98
70	179	99
	180	100
71	181	101
	182	102
	183	103
72	184	104
	185	105
73	186	106
	187	107
	188	108
74	189	109
	190	110
75	191	111
	192	112
	193	113
76	194	114

Videndum Production Solutions, Inc. Ex. 1004
Page 34 of 44

Table 17: SL PAR 155 ZOOM RGBW LED Luminaire Timing Channel Detail

% Value	DMX	= Seconds *(unless noted)*
	195	115
77	196	116
	197	117
	198	118
78	199	119
	200	100
79	201	121
	202	122
	203	123
80	204	124
	205	125
81	206	126
	207	127
	208	128
82	209	129
	210	130
	211	131
83	212	132
	213	133
84	214	134
	215	135
	216	136
85	217	137
	218	138
86	219	139
	220	140
	221	141
87	222	142
	223	143
88	224	144
	225	145
	226	146
89	227	147
	228	148
	229	149
90	230	150
	231	151
91	232	152
	233	153
	234	154
92	235	155
	236	156
93	237	157
	238	158
	239	159
94	240	160
	241	161
95	242	162
	243	163
	244	164
96	245	165

Videndum Production Solutions, Inc. Ex. 1004
Page 35 of 44

Table 17: SL PAR 155 ZOOM RGBW LED Luminaire Timing Channel Detail

% Value	DMX	= Seconds *(unless noted)*
	246	5 Minutes
97	247	15 Minutes
	248	30 Minutes
	249	60 Minutes
98	250*	60mS
	251*	80mS
99	252*	100mS
	253*	100mS
	254*	140mS
100	255* (default)	160mS

Note: * DMX values 250 to 255 provide smoothing when using console fade timing. DMX value 255 (recommended default) will provide the smoothest timing. For the fastest possible changes, set the timing channel to DMX value 0.

Videndum Production Solutions, Inc. Ex. 1004
Page 36 of 44

RDM PARAMETER IDS

1. SL PAR 155 ZOOM RGBW LED Luminaire RDM Parameter IDs

The following tables outline and describe all the RDM parameters IDs associated with SL PAR 155 ZOOM RGBW LED Luminaires.

- Table 18, "SL PAR 155 ZOOM RGBW LED Luminaire RDM Product Parameters IDs"
- Table 19, "SL PAR 155 ZOOM RGBW LED Luminaire RDM UID"
- Table 20, "SL PAR 155 ZOOM RGBW LED Luminaire RDM Parameters IDs
- Table 21, "SL PAR 155 ZOOM RGBW LED Luminaire RDM Manufacturer Status IDs," on page 39
- Table 22, "SL PAR 155 ZOOM RGBW LED Luminaire RDM Manufacturer Specific PIDs," on page 39

Table 18: SL PAR 155 ZOOM RGBW LED Luminaire RDM Product Parameters IDs

Model ID	Manufacturer	Model Description	Product Category
0x1121	Vari-Lite Asia	SL PAR 155 (RGBW)	0x0509

Table 19: SL PAR 155 ZOOM RGBW LED Luminaire RDM UID

UID					
MSB of ESTA 50H	LSB of ESTA 41H	1st of Unique Seq.	2nd of Unique Seq.	3rd of Unique Seq.	4th of Unique Seq.

Table 20: SL PAR 155 ZOOM RGBW LED Luminaire RDM Parameters IDs

Get Allowed	Set Allowed	RDM Parameter IDs	Value	Comment	Implemented
		Category - Network Management			
		DISC_UNIQUE_BRANCH	0x0001		■
		DISC_MUTE	0x0002		■
		DISC_UN_MUTE	0x0003		■
■		PROXIED_DEVICES	0x0010		
■		PROXIED_DEVICES_COUNT	0x0011		
■	■	COMMS_STATUS	0x0015		
		Category - Status Collection			
■		QUEUED_MESSAGE	0x0020		■
■		STATUS_MESSAGES	0x0030		■
■		STATUS_ID_DESCRIPTION	0x0031		■
	■	CLEAR_STATUS_ID	0x0032		■
■	■	SUB_DEVICE_STATUS_REPORT_THRESHOLD	0x0033		
		Category - RDM Information			
■		SUPPORTED_PARAMETERS	0x0050	*Support required only if supporting Parameters beyond the minimum required set.*	■
■		PARAMETER_DESCRIPTION	0x0051	*Support required for Manufacturer-Specific PIDs exposed in SUPPORTED_ PARAMETERS message.*	■

Videndum Production Solutions, Inc. Ex. 1004
Page 37 of 44

Table 20: SL PAR 155 ZOOM RGBW LED Luminaire RDM Parameters IDs

Get Allowed	Set Allowed	RDM Parameter IDs	Value	Comment	Implemented
		Category - Product Information			
■		DEVICE_INFO	0x0060		■
■		PRODUCT_DETAIL_ID_LIST	0x0070		
■		DEVICE_MODEL_DESCRIPTION	0x0080		■
■		MANUFACTURER_LABEL	0x0081		■
■	■	DEVICE_LABEL	0x0082		■
■	■	FACTORY_DEFAULTS	0x0090		■
■		LANGUAGE_CAPABILITIES	0x00A0		
■	■	LANGUAGE	0x00B0		
■		SOFTWARE_VERSION_LABEL	0x00C0		■
■		BOOT_SOFTWARE_VERSION_ID	0x00C1		
■		BOOT_SOFTWARE_VERSION_LABEL	0x00C2		
		Category - DMX512 Setup			
■	■	DMX_PERSONALITY	0x00E0		■
■		DMX_PERSONALITY_DESCRIPTION	0x00E1		■
■	■	DMX_START_ADDRESS	0x00F0	*Required if device uses a DMX Slot*	■
■		SLOT_INFO	0x0120		■
■		SLOT_DESCRIPTION	0x0121		■
■		DEFAULT_SLOT_VALUE	0x0122		
		Category - Sensors 0x02xx			
■		SENSOR_DEFINITION	0x0200		■
■	■	SENSOR_VALUE	0x0201		■
	■	RECORD_SENSORS	0x0202		
		Category - Dimmer Settings 0x03xx - FUTURE USE			
		Category - Power / Lamp Settings 0x04xx			
■	■	DEVICE_HOURS	0x0400		
■	■	LAMP_HOURS	0x0401		
■	■	LAMP_STRIKES	0x0402		
■	■	LAMP_STATE	0x0403		
■	■	LAMP_ON_MODE	0x0404		
■	■	DEVICE_POWER_CYCLES	0x0405		
		Category - Display Settings 0x05xx			
■	■	DISPLAY_INVERT	0x0500		■
■	■	DISPLAY_LEVEL	0x0501		
		Category - Configuration 0x06xx			
■	■	PAN_INVERT	0x0600		
■	■	TILT_INVERT	0x0601		
■	■	PAN_TILT_SWAP	0x0602		
■	■	REAL_TIME_CLOCK	0x0603		
		Category - Control 0x10xx			
■	■	IDENTIFY_DEVICE	0x1000		■
	■	RESET_DEVICE	0x1001		

Table 20: SL PAR 155 ZOOM RGBW LED Luminaire RDM Parameters IDs

Get Allowed	Set Allowed	RDM Parameter IDs	Value	Comment	Implemented
■	■	POWER_STATE	0x1010		
■	■	PERFORM_SELFTEST	0x1020		
■		SELF_TEST_DESCRIPTION	0x1021		
	■	CAPTURE_PRESET	0x1030		
■	■	PRESET_PLAYBACK	0x1031		

Table 21: SL PAR 155 ZOOM RGBW LED Luminaire RDM Manufacturer Status IDs

Manufacturer Specific messages are in the range of 0x8000 - 0xFFDF. Each Manufacturer-specific Status ID shall have a unique meaning, which shall be consistent across all products having a given Manufacturer ID. See Table B-2, ANSI E1.20-2010.

Status ID Message	Value	Data Value 1	Data Value 2	Status ID Description
8100H		00H	00H	ALL OK

Table 22: SL PAR 155 ZOOM RGBW LED Luminaire RDM Manufacturer Specific PIDs

Get Allowed	Set Allowed	RDM Parameter IDs	Type	Length	Unit	Prefix	Min	Max	Default	Description
Category - Manufacturer Defined PIDs - Range is 0x8000-0xffdf (See ANSI E1.20-2010 Standard, Table A-3)										
■	■	8A00H	U8	1	None	None	0	100	100	DIMMER
■	■	8A04H	U8	1	None	None	0	100	100	Dimmer RED
■	■	8A05H	U8	1	None	None	0	100	100	Dimmer GREEN
■	■	8A06H	U8	1	None	None	0	100	100	Dimmer BLUE
■	■	8A07H	U8	1	None	None	0	100	100	Dimmer WHITE
■	■	8AB2H	U8	1	None	None	1	18	1	Chase
■	■	8AB0H	U8	1	None	None	0	43	0	Color Filter
■	■	8AB1H	U8	1	None	None	0	31	0	Preset
■	■	8A92H	U8	1	None	None	0	255	0	Strobe
■	■	8A94H	U8	1	None	None	0	255	0	Duration
■	■	8A97H	U8	1	None	None	0	1	0	Fan AUTO/OFF Setup
■	■	8AC0H	U8	1	None	None	0	255	255	Intensity Timing
■	■	8AC2H	U8	1	None	None	0	255	255	Color Timing
■	■	8A40H	U8	1	None	None	0	1	0	Link Mode
■	■	8A42H	U8	1	None	None	0	1	0	Incandescent Effect
■	■	8AA1H	U8	1	None	None	0	3	0	Dimming Curve
■	■	8A0CH	U8	1	None	None	0	3	0	DMX Fail Mode
■	■	8AA0H	U8	1	None	None	0	4	0	Backlight Off Time
■	■	8AA2H	U8	1	None	None	0	94	0	Power Up Setup
■	■	8A44H	U8	1	None	None	0	1	0	Calibration ON/OFF Setup
■	■	8A41H	U8	1	None	None	0	1	0	Lock Fixture

Videndum Production Solutions, Inc. Ex. 1004
Page 39 of 44

CLEANING AND CARE

WARNING! All cleaning should be performed with power completely removed from the luminaire. Never remove protective covers when luminaire is powered. Wear appropriate protective eye wear and gloves when cleaning the fixture. All service and maintenance, other than described herein, should be performed by a qualified technician or Authorized Service Center.

1. Special Cleaning and Care Instructions

Being a solid-state fixture, and unlike most fixtures, the SL PAR 155 ZOOM RGBW LED Luminaire requires very little routine maintenance by the user.

The SL PAR 155 ZOOM RGBW LED Luminaire special care when it comes to cleaning front lens assembly. Additional care needs to be taken with the plastic components because they are much easier to scratch or damage than glass.

The following is a list of cleaning materials required to care for your SL PAR 155 ZOOM RGBW LED Luminaire:

- Lint free lens tissue
- Lint or powder free gloves
- Reagent grade isopropyl alcohol*
- A mild soap solution.

Note: *Reagent grade isopropyl alcohol is good to use on the SL PAR 155 ZOOM RGBW LED Luminaire plastic optics.

If the lens is still dirty after using isopropyl alcohol, for instance if fingerprints or oil is just redistributed and not cleaned off the optic, then a mild soap and water solution can be used to gently wash the lens. Repeat the cleaning with isopropyl alcohol to eliminate streaks and soap residue.

WARNING! Under no circumstances should ammonia-based cleaners, acetone, or other harsh solvents be used on or near the SL PAR 155 ZOOM RGBW LED Luminaire. These types of cleaners or solvents can permanently damage the optics or housings of the fixture.

If you have any questions regarding the use or care of your SL PAR 155 ZOOM RGBW LED Luminaire, please contact Showline technical support or your local Authorized Dealer.

2. Front Lens Cleaning

To clean the front lens:

Step 1. Turn off luminaire and allow to cool completely.

Step 2. Apply a small amount of reagent grade isopropyl alcohol to lint-free lens tissue.

Step 3. Wipe all debris, dirt, fingerprints, etc. from lens.

Step 4. Using a second lint-free lens tissue, wipe off any alcohol residue.

3. Service and Maintenance

For all other service and maintenance issues, please contact your local Showline office or an Authorized Service Center.

Videndum Production Solutions, Inc. Ex. 1004
Page 40 of 44

WARNING! Disassembly (other than as described herein), alterations, unauthorized service, etc. will void the product warranty. Contact your local Showline office or an Authorized Service Center for technical support and service.

4. Accessories

Only Showline approved accessories should be used with your SL PAR 155 ZOOM RGBW LED Luminaire. For a list of approved accessories, please see "Accessories" on page 5. For questions regarding accessories, please contact your local Authorized Showline Dealer or Showline office.

Videndum Production Solutions, Inc. Ex. 1004
Page 41 of 44

TECHNICAL SPECIFICATIONS

1. Operational Specifications

Source:	Color RGBW LED Array (x9 - 15 Watt High Power LED Chipsets)
Beam Angle:	8 to 40 Degrees (hand adjustable)
Light Output:	> 3,200 lumens
Color Temperature:	2700 - 6,500K (user adjustable)
Input Voltage (AC):	100V to 240V (+/- 10%, auto-ranging)
Current (AC):	1.50 Amps (100V) / 0.63 Amps (240V)
Power Consumption:	150 Watts (max.)
Frequency:	50/60Hz
Control Protocols:	DMX512 (1990) / DMX512A (RDM) / On-Board Menu
Ambient Temperature:	1 to 40 Degrees C (33 to 104 Degrees F)
Humidity:	5%-95% Non condensing
Cooling:	Forced Air
Weight:	17.6 lbs (8.0 kg) - Luminaire only (no accessories)
Housing:	Die Cast Aluminium with Powder Coating
Compliance:	cETLus Marked (North American models) and CE Marked (International models)
IP Rating:	IP20

Note: Common model specifications shown. For specific model specifications, features, and accessories, refer to the product specification sheet for more details.

Videndum Production Solutions, Inc. Ex. 1004
Page 42 of 44

2. Luminaire Dimensions

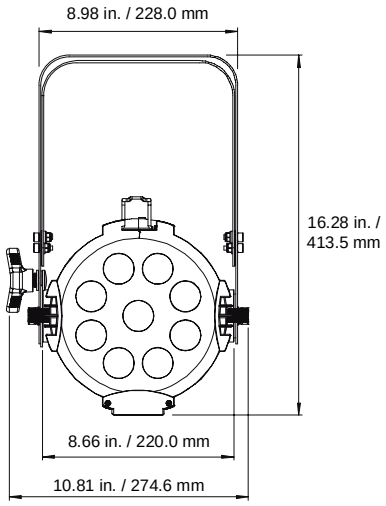

Front View

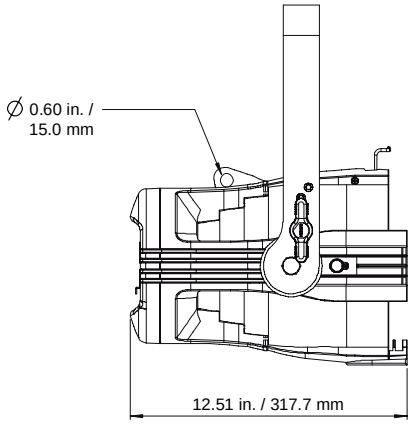

Side View

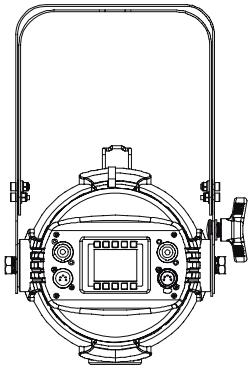

Rear View

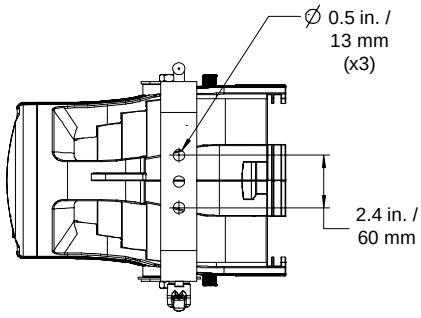

Top View

Videndum Production Solutions, Inc. Ex. 1004
Page 43 of 44

Showline

Dallas
10911 Petal Street
Dallas, TX 75238
Tel: +1 214-647-7880
Fax: +1 214-647-8031

Hong Kong
Unit C, 14/F, Roxy Industrial Centre
No. 41-49 Kwai Cheong Road
Kwai Chung, N.T., Hong Kong
Tel: +852 2796 9786
Fax: +852 2798 6545

Auckland
19-21 Kawana Street
Northcote, Auckland 0627
New Zealand
Tel: +64 9 481 0100
Fax: +64 9 481 0101

Europe
Rondweg zuid 85
Winterswijk 7102 JD
The Netherlands
Tel: +31 (0) 543-542516

VARI*LITE

©2013 Vari-Lite