US008581513B1

(12) **United States Patent**
Reinoso

(10) **Patent No.: US 8,581,513 B1**
(45) **Date of Patent: Nov. 12, 2013**

(54) **BATTERY POWERED WIRELESS DMX LED LIGHTING SYSTEM**

(75) Inventor: **Jhansen Reinoso**, Miami, FL (US)

(73) Assignee: **Leilani Reinaso**, Miami Gardens, FL (US)

(*) Notice: Subject to any disclaimer, the term of this patent is extended or adjusted under 35 U.S.C. 154(b) by 0 days.

(21) Appl. No.: **13/451,541**

(22) Filed: **Apr. 20, 2012**

(51) **Int. Cl.**
G05F 1/00 (2006.01)

(52) **U.S. Cl.**
USPC ..... **315/291**; 315/307; 315/247; 315/185 S; 315/312

(58) **Field of Classification Search**
USPC 315/291, 294, 312, 316, 324
See application file for complete search history.

(56) **References Cited**

U.S. PATENT DOCUMENTS

6,166,496	A	12/2000	Lys	
6,211,626	B1 *	4/2001	Lys et al.	315/291
7,233,115	B2	6/2007	Lys	
7,309,965	B2	12/2007	Dowling	
7,355,523	B2 *	4/2008	Sid	340/9.16
7,432,803	B2 *	10/2008	Fails et al.	340/531
7,969,102	B2 *	6/2011	Chang	315/318
2005/0248299	A1 *	11/2005	Chemel et al.	315/312
2006/0262544	A1 *	11/2006	Piepgras et al.	362/373
2008/0094005	A1	4/2008	Rabiner	
2010/0141153	A1 *	6/2010	Recker et al.	315/149
2011/0013395	A1	1/2011	Melzner	
2011/0157245	A1 *	6/2011	Young	345/690
2011/0181200	A1 *	7/2011	Luk et al.	315/294
2012/0049765	A1 *	3/2012	Lu et al.	315/312

* cited by examiner

Primary Examiner — Tuyet Thi Vo
(74) *Attorney, Agent, or Firm* — Christopher J. Vandam, PA; Chris Vandam

(57) **ABSTRACT**

A DMX based wireless, light emitting device and system including wireless modules that are battery powered and wirelessly receive and transmit DMX to other modules or a controller device. The modules can optionally be hard wired to both a DMX signal and external power supply. An integrated processor can independently control a pre-selected lighting effects, channels, addresses, programs and other light effect features.

14 Claims, 5 Drawing Sheets

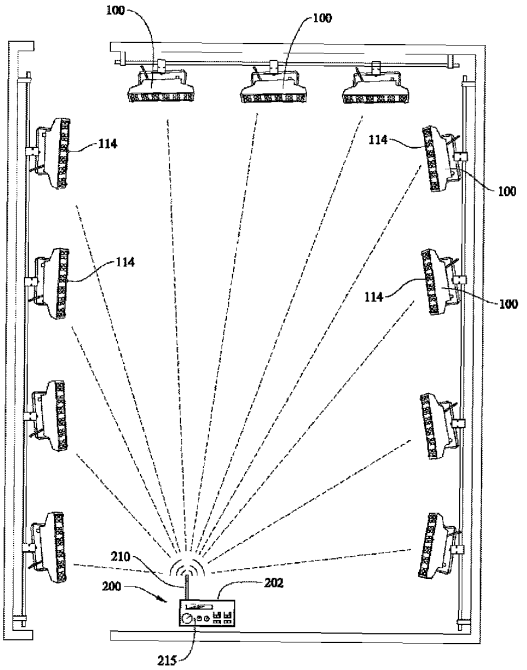

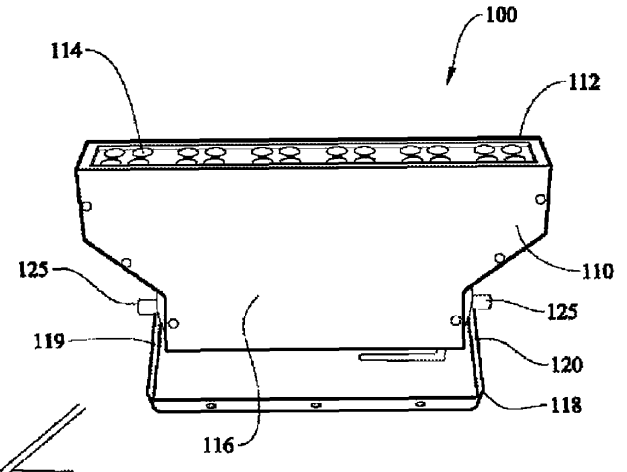

FIG. 1

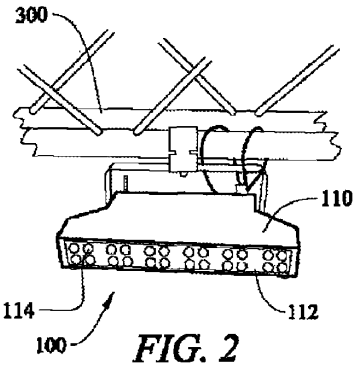

FIG. 2

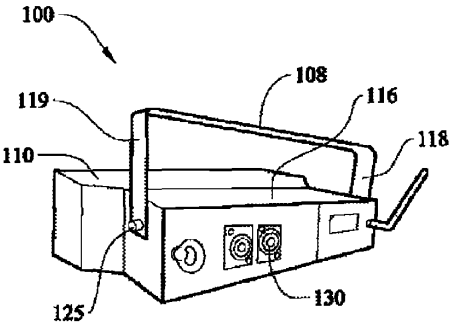

FIG. 3

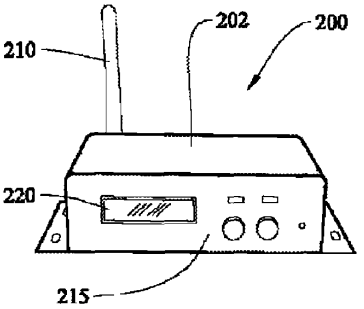

FIG. 4

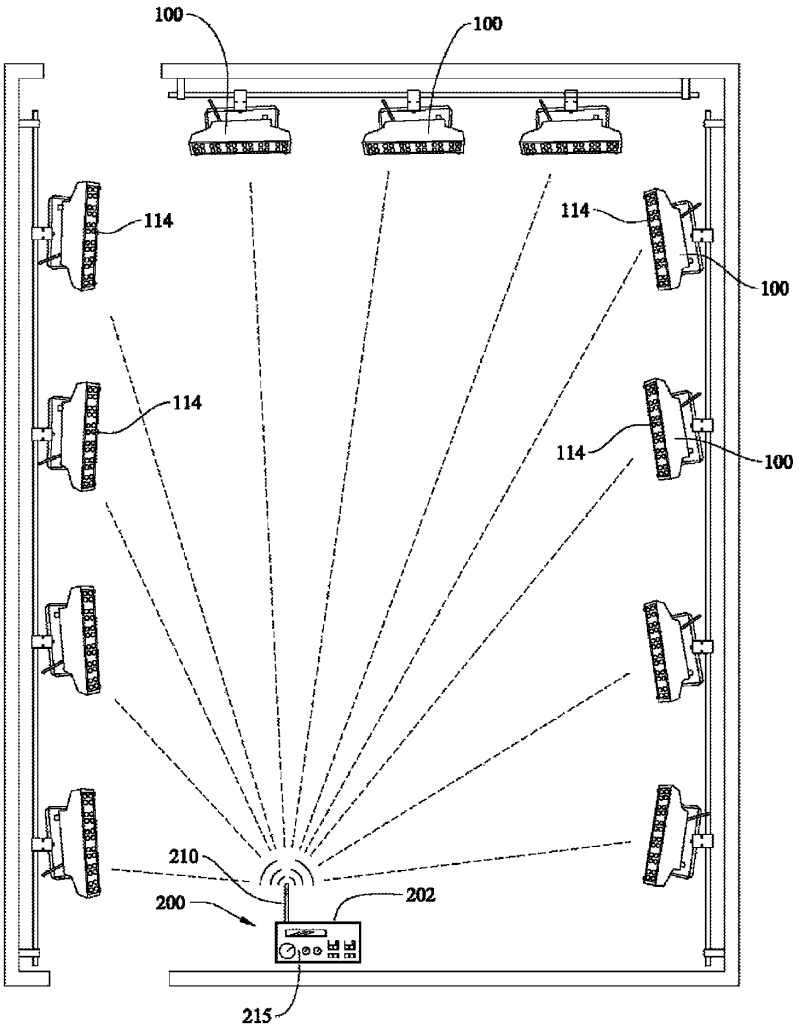

FIG. 5

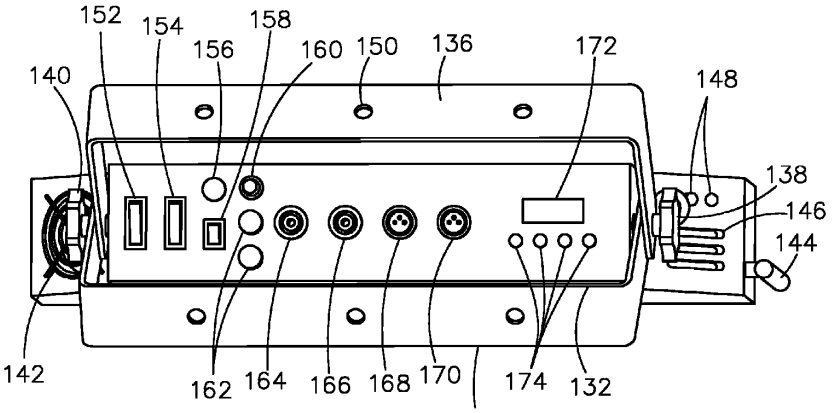
152
154
158
156
160
150
136
172
140
148
138
146
144
142
162
164
166
168
170
174
132
134

Fig. 6

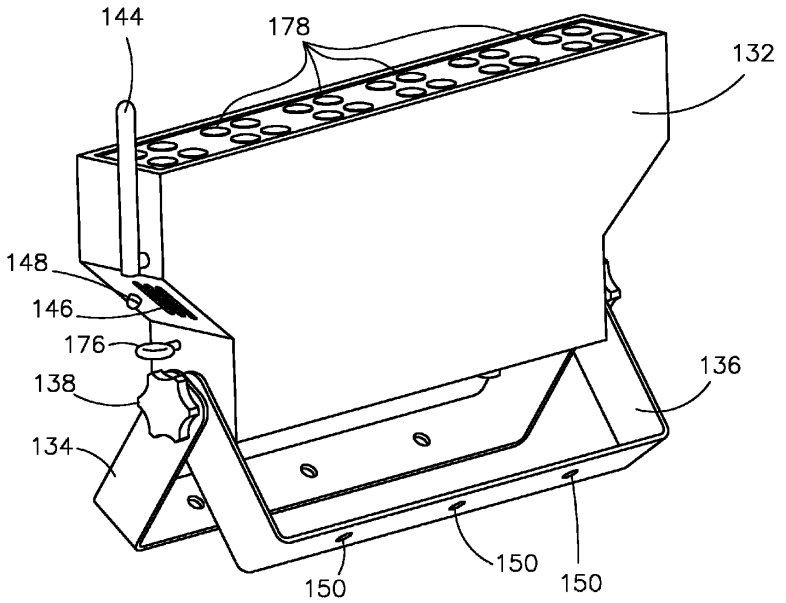
144
178
132
148
146
176
138
134
136
150
150
150

Fig. 7

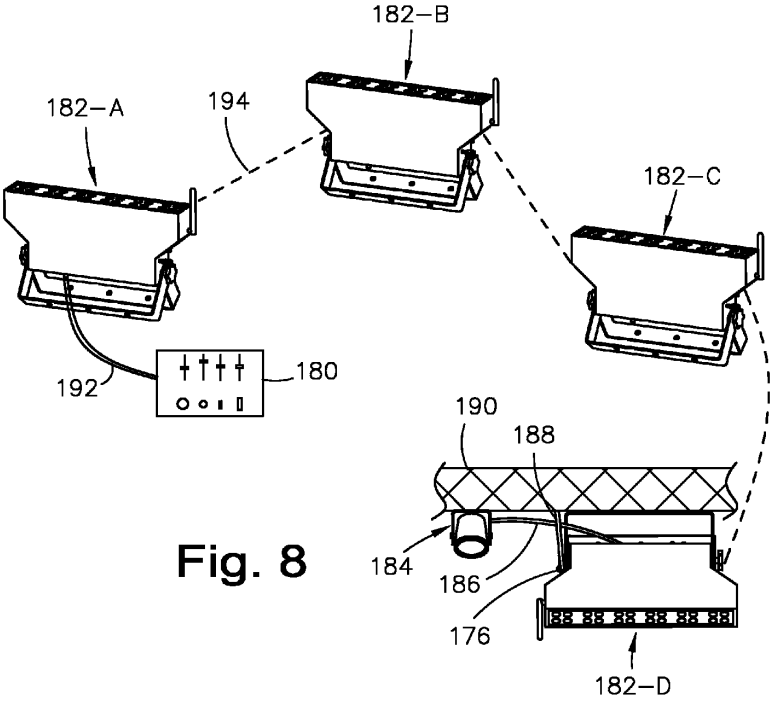
182–B
182–A
194
182–C
192
180
190
188
184
186
176
182–D

Fig. 8

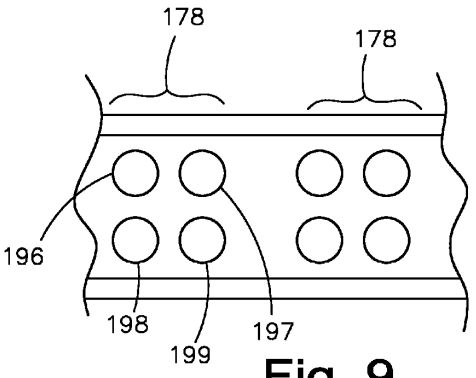
178
178
196
198
199
197

Fig. 9

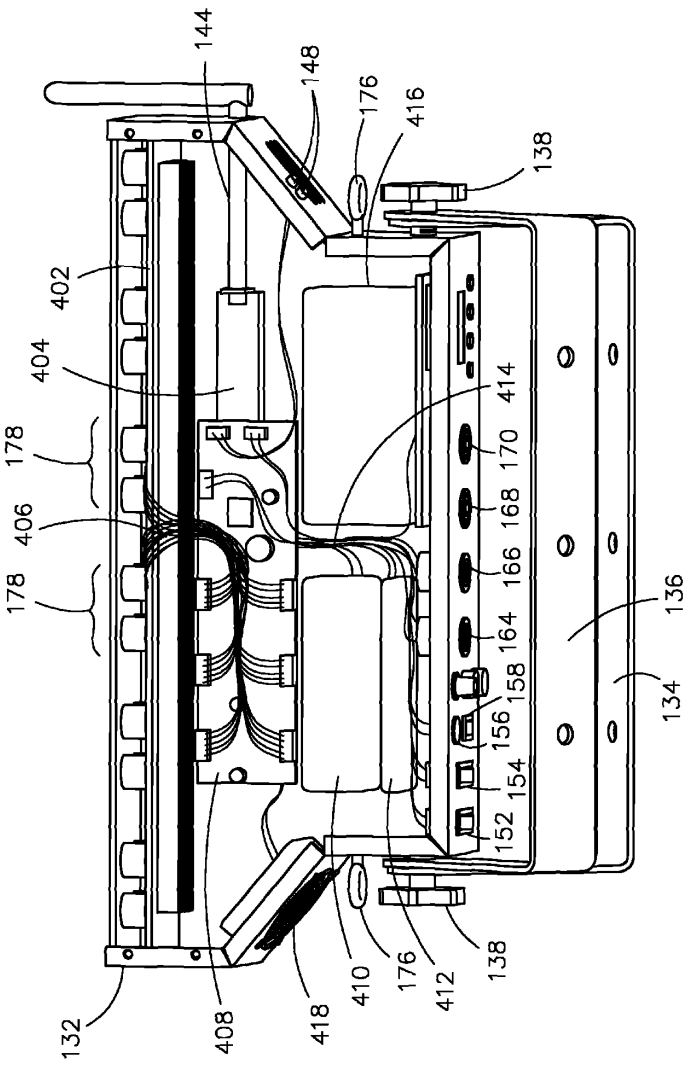
144
148
176
416
138
402
404
178
406
178
414
170
168
166
164
158
156
154
152
136
134
132
408
418
410
176
412
138

Fig. 10

BATTERY POWERED WIRELESS DMX LED LIGHTING SYSTEM

This non-provisional patent application takes priority from pending provisional patent application No. 61/477,029, filed on 19 Apr. 2011 and pending non-provisional patent application Ser. No. 13/449,952 filed on 18 Apr. 2012 and pending non-provisional patent application Ser. No. 13/450,950, each by the same inventor, and these are hereby incorporated herein in their entirety by reference.

BACKGROUND OF THE INVENTION

1. Field of the Invention

The present invention relates to special event lighting, and more particularly, to a modular, self-contained and networkable dynamic lighting system.

2. Description of the Related Art

Several designs for Digital Multiplex (DMX) compliant devices have been designed in the past. However, none of them include, among other features, the capabilities in a battery or hard-wired self-contained device that can wirelessly or via wired DMX cables seamlessly work with other similar modules to produce a highly controlled lighting effect system when used alone or in combination with multiple other substantially identical modules working in concert.

Prior art devices for event lighting generally require a wired signal connection and wired power connections. Some devices have recently become available that provide some limited wireless capabilities but fail to include elements in a unified form factor including, inter alia, multi-colored light emitting diodes (LED) that are independently and fully controllable either automatically, wirelessly or wired and that connect to a other similar modules or a dedicated controller.

Other patents describing other related subject matter provide for a number of more or less complicated features that fail to solve the problem in an efficient and economical way. None of these patents suggest the novel features of the present invention.

SUMMARY OF THE INVENTION

It is one of the main objects of the present invention to provide a wireless and cordless lighting effects module that is highly functional on its own and also flexible to seamlessly integrates multiple modules and other third-party systems.

It is another object of this invention to provide a device that can dramatically extend the range of DMX lighting systems by wirelessly connecting modular device in series.

It is still another object of the present invention to provide a multi-channel DMX based modular device allowing control of multiple LED lights to affect color, pattern and luminosity.

Another object of the invention is to provide a battery operated, self-contained modular lighting effects system.

In yet another aspect, the battery powered wireless lighting system is especially useful for production companies, event companies, party companies, DJs, hotels, clubs, banquet halls, etc.

It is yet another object of this invention to provide such a device that is inexpensive to manufacture and maintain while retaining its effectiveness.

Further objects of the invention will be brought out in the following part of the specification, wherein detailed description is for the purpose of fully disclosing the invention without placing limitations thereon.

BRIEF DESCRIPTION OF THE DRAWINGS

With the above and other related objects in view, the invention consists in the details of construction and combination of

parts as will be more fully understood from the following description, when read in conjunction with the accompanying drawings in which:

FIG. **1** represents a perspective view of a battery powered wireless lighting module as disclosed herein.

FIG. **2** shows a perspective view of a version of the device as it may be in use affixed to a mounting structure.

FIG. **3** illustrates an alternate perspective view demonstrating the rear side of a version of the device.

FIG. **4** is a representation of a perspective view of a wireless transmitter that optionally may be used with the lighting system.

FIG. **5** shows a plan view of an example of a room layout where multiple devices are shown and a wireless transmitter is shown in perspective view.

FIG. **6** is a perspective view of the control panel side of the device.

FIG. **7** shows a perspective view of the device as it may be set up on the floor for up lighting.

FIG. **8** represents a perspective view of multiple modules used in conjunction with a prior art device.

FIG. **9** is a partial plan view of light clusters on the lighting side of the device.

FIG. **10** is a perspective view of the device with a side panel removed to demonstrate the several interior components.

DETAILED DESCRIPTION OF THE PREFERRED EMBODIMENT

It should be appreciated the invention disclosed herein is sometimes equally referred to as the device, unit, module or sister. Some components that would be readily apparent to one skilled in the art are not always shown in the drawings when sufficient enabling details are provided in this specification to allow for use and manufacture of the invention without undue experimentation.

Referring now to the several sheets of drawings, where the present invention is shown in exemplary forms, it can be observed that in an important version it generally includes at least one lighting module **100**, a wireless transmitter **200** and a ceiling structure **300**. The lighting module **100** is shown to further include an outer casing **110**, a frontal portion **112**, a set of LEDs **114**, a side panel **116**, a rotatable bracket **118**, legs **119**, legs **120**, adjustable bolts **125** and a cooling fan **130**. The transmitter **200** is shown to further include an outer casing **202**, an antenna **210**, controls **215** and a digital display **220**.

With reference to the drawings and specification, a battery powered wireless DMX LED lighting system includes at least one lighting module **100** and a wireless transmitter **200** is shown. The lighting module **100** includes an outer casing **110** with a frontal portion **112**. A set of LEDs **114** are located on the frontal portion **112**. A rotatable bracket **118** is pivotally mounted on ends of the lighting module **100**. The bracket **118** includes a U-shaped arm with attachment legs **119** and **120** pivotally attached to the outer casing **110** by means of adjustable bolts **125**. The bracket **118** allows the feature to be hung for stage lighting, and also allows the user to adjust the height and the angle of the light. FIG. **3** shows a cooling fan **130** on a rear of the lighting module **100**.

The wireless transmitter **200** includes, inter alia, an outer casing **202**, an antenna **210**, controls **215** and a digital display **220**. The wireless transmitter **200** also includes DMX connections. With reference to FIG. **2**, the lighting module **100** may be hung from a ceiling structure **300** for a stage lighting or other similar application. However, mounting of the lighting module **100** should not be limited to that shown in FIG. **2**,

but should include other mounting methods, such as down lighting, floor lighting, or the like.

An important version of the lighting module **100** of the battery powered wireless DMX LED lighting the system preferably includes at least the following features:

- Rechargeable Battery with up to 18 hours of battery life
- Digital battery power indicator 0-100%
- External power source alternate to the battery that can also be used for charging the battery
- Wireless DMX-512 protocol
- Built in receiver/transmitter for wireless DMX operation
- Auto-jumping channel frequencies with high anti-jamming ability
- Multiple unique transmitter and receiver codes
- Wired DMX protocol connections
- RGBW color mixing (Optional: RGBA)
- 24-1 Watt Edison LED 6 red, 6 green. 6 blue, 6 white
- 45 degree lenses (Optional: 15°, 25°, 30° lenses)
- Electronic Dimming 0-100%
- LED display and function buttons for address and function setting
- Control DMX channels 4, 8, 24 or 28 CH
- Master/Slave Synchronization via wireless and wired
- Operation modes: DMX, sound active and auto modes
- Built in microphones for sound active mode
- Dual bracket for floor stand or hanging mount
- Dual eye bolts for safety and security cables

FIG. **1** shows a version of the device as it may be in use on a horizontal surface such as the floor or a table. A plurality of sets of LEDs **114** are on a frontal portion **112** of an outer casing **110**. A rotatable bracket **118** is articulably attached to the outer casing **110** by means of leg **119** and leg **120**. Leg **119** and leg **120** are adjustably affixed to the outer casing **110** by means of adjustable bolts **125** on either side of the outer casing **110**. The adjustable bolts **125** may be in the form of a knob that can be threaded tightly thereby holding the relative angle between the outer causing **110** and the legs **119-120**. The rotatable bracket **118** connects leg **119** to leg **120**. Rotatable bracket **118** serves as a support member when setting on a horizontal surface such as the ground or it can be used to hang the device from a truss.

FIG. **2** shows the module **100** as it may be hung from a truss. This configuration is typical if the system is used, for example, for stage wash lighting.

FIG. **3** shows the back side of a version of the device where a cooling fan **130** is shown. Cooling is preferred for the device to maintain optimum efficiency of the battery and lights and helps provide longevity of all of the internal components by maintaining a suitable temperature inside the device. Optionally a thermostat is provided to aid in conserving battery power by only turning the fan on if and when needed to cool the device. Preferably if the device is powered by an external power source then the fan may run constantly.

FIG. **4** shows a DMX wireless transmitter **200**. Generally, the wireless transmitter **200** receives a wired DMX signal and converts it to a wireless signal and transmits via the antenna **210**. The wireless transmitter **200** can add DMX instructions to the signal which is accomplished by controls **215** and reflected in the digital display **220**.

An example of a composite wireless DMX lighting system is demonstrated in FIG. **5** to include a plurality of lighting modules **100** that are mounted around a perimeter of a venue and controlled with a single wireless transmitter **200**. The wireless transmitter **200** sends a DMX signal and/or instructions to each of the lighting modules **100** within range. In this example, each of the wireless transmitters **100** are operated on internal battery power and wirelessly receive the DMX signal from the wireless transmitter providing a fully wireless system. Some wireless transmitters **200** may require an external power supply. However, this is rarely a problem because the wireless transmitter can be placed in any location that is convenient for the application. Thus the wireless transmitter **200** may be placed out of the way, near a wall power outlet.

The wireless controller **200** generally can send signals to the lighting modules to turn them on or off, change the color of the light emitted by the sets of LEDs **114**, change the program or pattern, intensity, change rate and control other effects and features as may be needed or available on the lighting modules in use.

The present invention provides a battery powered wireless or wired DMX LED lighting system. Generally, DMX is a system or protocol for controlling lighting fixtures and dimmers. Commonly these are for temporary or semi-permanent installations, for example, such as for special events, multimedia events, presentations or concerts. DMX technology itself has several applications. For example, a wide variety of lighting control consoles, controllers and other devices that output or input DMX signals can be used to connect and control a wide variety of commercially available of lighting fixtures, devices and accessories for control by DMX. DMX is a frequently used technology for many professional lighting and special effects applications.

Another common use of DMX technology includes architectural applications. For example, architectural lighting projects, including illumination of building exteriors, accent lighting, general purpose building management, and high-end residential lighting. This is due primarily to the high popularity of LED-based lighting fixtures, which can be controlled via DMX equipment and signals.

DMX **512**, an important version of the DMX standard, is popular partly due to its robustness. The cable can be abused without material loss of function in ways that would render Ethernet or other high-speed data cables useless. Cable faults or other damage can occasionally lead to problems, such as random triggering or other failures. However, usually unexpected fixture behavior is caused by addressing errors, cable faults, or incorrect data from the controller.

Recently, wireless DMX **512** adapters with limited functionality have become available, especially in architectural lighting installations where cable run lengths can be prohibitively long or have other intervening features that make wired applications problematic. Such networks typically employ a wireless transmitter at the controller with strategically placed receivers near the fixtures to convert the wireless signal back to conventional DMX **512** wired network signals. This creates a complicated array of DMX signal wires, power cables and the requisite adapters that all require labor to set-up, take down, store and keep track of. A benefit of the present invention is that all of the previously required elements are integrated with each other so that each element is adapted to interact together synergistically, all contained in a stout case.

It should be appreciated that the references to DMX are intended to include the several versions and variations included in the DMX standard as promulgated by the Engineering Commission of United States Institute for Theatre Technology (USITT) or the Entertainment Services Technology Association (ETSA) as well revisions and improvements as may become available from time to time.

Early wireless DMX **512** systems were based on frequency-hopping spread spectrum (FHSS) technology using commercial wireless modems. Somewhat later some manufacturers used WiFi/WLAN technology adapting systems from computer based network systems. Higher bandwidth, improved protocols and variable channels and frequencies

have been in development over the past several years. FHSS systems have a tendency to sometimes interfere with WiFi/WLAN based systems. Improvements have been made in newer wireless DMX systems by using adaptive frequency hopping and cognitive coexistence (AFH-CC), a technique to detect and avoid surrounding wireless systems, to avoid transmitting on frequencies utilized by other devices.

An important version of the invention provides a battery powered wireless DMX LED lighting device and system, including a lighting module having a multiplicity of low watt lights. For example, 24-1 watt LED's comprised of 6 red, 6 green, 6 blue and 6 white. Obviously many more or less quantity of LED's may be effectively used. Each device in the system is powered by a long life battery. For example, most applications would be well suited with an 18-hour life battery. Also included in the device is an integrated wireless transmitter and receiver, ideally with a 1,300-feet range. The wireless transmitter and receiver are adapted to receive and transmit a wireless DMX signal or other appropriate signals affecting the utility of the lights.

Now referring to FIGS. **6**, **7**, **8** and **9** where a preferred version of the device is shown to further include a case **132**, a bracket **134**, a bracket **136**, a fastener **138**, a fastener **140**, a grille **142**, an antennae **144**, a vent **146**, indicators **148**, apertures **150**, a switch **152**, a switch **154**, a microphone **156**, a switch **158**, a switch **160**, fuses **162**, a socket **164**, a socket **166**, a socket **168**, a socket **170**, a display **172**, controls **174**, a ring **176**, a light cluster **178**, a controller **180**, a module (generally) **182**, a prior art DMX fixture **184**, a cable **186**, a safety line **188**, a truss **190**, a cable **192**, a wireless signal **194**, a light **196**, a light **197**, a light **198** and a light **199**.

Generally, the case **132** is provided to house the various internal components including a battery, a battery charger, a processor, a power regulator, the light clusters **178** and other elements as described herein. The rear panel of the case **136** has the controls for the various features and settings of the device. In this embodiment, switch **152** is an on-off switch for use when the device is powered by an external power source. The external power source is connected to the device at socket **164**. The external power source can be used both to operate the device when not on battery power and can also be used to recharge the battery.

Said case **132** may optionally be constructed to waterproof standards or weather resistant standards to allow safe operation in a wide variety of conditions.

Switch **154** is a three way rocker switch that controls the battery. Switch **154** has selections to run on battery power, isolate the battery (off) and charge the battery. Power must be supplied from outside the device to charge the battery. To charge the battery the switch **152** is in the off position and switch **154** is moved to charge thus allowing current to flow from outside the device, to the battery charger and into the battery. When the device is not in use and is not charging then switch **152** and switch **154** are both in the off positions.

Switch **158** is provided to independently turn the wireless transceiver on and off. By providing the wireless transceiver switch **158** battery supply can be saved when the DMX signal is inputted to the device via a traditional hard wire.

The microphone **156** is used in conjunction with the sensitivity switch **160**. In one mode of operation the microphone **156** picks up ambient sounds, such as the beat of music played, and with the help of the processor can synchronize the light show outputted with the beats. This creates an effect of the light show produced by the device being in automatic coordination with the sounds in the room. The sensitivity switch **160** can adjust the levels of sound in the room that are picked up by the microphone **156**. This effectively allows a sound active mode where the lighting effects work seamlessly and automatically with the music or other sounds in the area.

Because the device can be operated on either battery power or an external power source, fuses **162** are provided to protect the components of the device. In this example, one fuse is to protect the battery circuit and the other fuse protects the alternating current supplied external to the device for hard wired power and power coming into the device during charging of the battery.

Socket **164** is an input for an external power supply for powering the device itself and charging the internal battery. Socket **166** is provided to connect a subsequent device, whether another sister device (another copy of the invention) or a third-party device, to the external power supply. This is effect creates a daisy chain for the power supply. This is useful for some applications where it would be difficult to provide separate individual power cords to each modular device. For example, if multiple devices are affixed adjacently to a stage gantry then only one power cable need to supplied to the first module in the series and then short cable runs between the modules are required to supply grid-power (as opposed to battery power) to each module. Of course, an external power supply could be in the form of solar panels, a fueled generator, wind turbine or any other available locally produced or municipal power supply, as appropriate in the context.

In similar fashion to the power input socket **164** and output socket **166** there is provided a DMX signal input socket **168** and output socket **170**. If the user of the device wishes to hard wire a DMX signal cable into the device input socket **168** accepts that cable. The DMX signal can then be outputted through DMX cable connected to socket **170** in daisy chain fashion. For example, if several modules are placed around a DJ table it may be preferable to simply hardwire the adjacent devices to each other with a hard cable from a DMX controller to the first module at socket **168**, then out from the socket **170** on the first module to the socket **168** on the second module, then out from the second module at it's socket **170** to the input socket **168** on a third module, and so on, indefinitely.

An important feature of the invention is to be able wirelessly relay the DMX signal from any module to a sister-module. Referring now to FIG. **8** where a system of multiple devices is shown with other non-claimed elements. In this example module **182**-A is a master module. Module **182**-A is connected via DMX cable **192** to a controller **180**. Module **182**-A then relays the wireless signal **194** to module **182**-B which in turn relays the signal **194** to module **182**-C and again on to module **182**-D. As should now be apparent, this can greatly extend the overall range that a DMX signal can be transmitted. Practically, the signal could be relayed over many miles when there are a series of modules spaced at distance where one module can relay to the next repeatedly.

Still referring to FIG. **8**, the last module **182**-D in the daisy chain is affixed to a truss **190**, such as may hold speakers and lights over a sound stage. A prior art device **184** is depicted near the module **182**-D. The prior art device **184**, without a wireless DMX capability, is connected to a DMX cable **186** on one end to the DMX output socket **170** on module **182**-D on the other end. Typically, a prior art device **184** would require it's own power supply but could also be supplied power from the power output socket **166** on module **182**-D if module **182**-D is fed external power into it's socket **164**.

In this example in FIG. **8**, each of the modules **182**-A though **182**-D are operating under battery power but could equally be powered by an external source, as described above, or any combination of battery and externally sourced power.

The controller **180** in FIG. **8** is merely an example showing a four channel configuration and it should be appreciated that

many more channels could equally be available with a larger controller. Also, the controller **180** could wirelessly connect to module **182**-A, or any other module within wireless range. An example of a wireless controller means is shown in FIG. **4**, described supra.

Yet referring to FIG. **8**, the ring **176** integral to the case **132** provides a safety and security means by allowing the module **182**-D to be tethered to the truss **190**. Obviously, each of the several modules in this example could be secured to another object preventing theft or providing a backup means to attach the module to an overhead structure to add a level of safety should the module inadvertently become unattached from the support structure, thereby avoiding a fall.

FIG. **9** is a close-up of the light emitting surface of the device emphasizing a pair of light cluster **178**. Light cluster **178** are each preferably comprised of a cluster of a light **196**, a light **197**, a light **198** and a light **199**. The light clusters **178** preferably have one each of a red, green, blue and white light emitting diode (LED). Multiple light clusters **178** are positioned adjacent to each other on the light emitting face of the device, as shown in FIG. **7** and as a partial close-up view in FIG. **9**.

Light clusters **178** could also effectively be comprised of additional LED lights with redundant colors or additional colors. Each individual light **196** through **199** could also be constructed of a varying wavelength LED so that each individual LED could be independently adjusted for color. Color is intended to include any of the visible light spectrum as well as wavelengths from about the infrared to the ultraviolet. A 'black light' feature provided by the LEDs is particularly useful for inclusion in the device.

The quantity and position of the light clusters **178** on the device as well as the composition of the individual elements (i.e. single LEDs) are variable as the application of the device requires. For example, a version including all one color of LED lights may be better suited to a particular application such as for a photography light source or emergency lighting an all-white LED configuration may be preferred.

Referring back to FIGS. **6** and **7** where each figure shows an individual module, a display **172** and controls **174** are provided to manually allow the user to control the device's settings and program. A central processing unit, described in more detail infra, is connected to the display **172** and controls **174**. In a primary version of the device a series of menus and commands may be accessed by the controls **174**.

For example, the DMX addresses may be assigned so that a wireless controller can access the appropriate features. In this example, if the address is assigned 'four', then four aspects of control are made available to the wireless controller. These four could be red, green, blue and white so that the wireless controlled can affect the intensity of each of these addresses (i.e. colors) independently. The operator of the device then has variable control over these aspects to mix and match intensity of each color LED resulting in a wide verity of net mixed colors.

In a related example, if the address is assigned a value of eight, then in addition to the individual four colors, supra, additional controls are available for a programmed pattern, intensity, speed and strobe effects. If the wireless controller has the capability then additional address can be made available to control individual LEDs which is essentially pixel mapping so that a more defined pattern can result from the light shone by the LEDs. Generally, the more addresses that are recognizable by the module the more control the operator has over the various aspects of the resulting light produced.

It should be appreciated that there may be many more addresses, such as five hundred twelve in the DMX **512** protocol. The present system can equally be adapted to any number of additional addresses to control additional features. Additional DMX interfaces may also be simultaneously used to provide control over an increased number of modules and their respective light clusters and individual LED lights.

Yet referring to the display **172** and controls **174**, the menus can allow the operator to select a variety of pre-programmed effects. These may include, by way of example, fades, strobes, chases, speeds and demo programs. The characteristics of the demo programs may also be tuned for speed, hue saturation and other attributes.

The display **172** can preferably be used to display other facets including remaining battery capacity. For example, a percentage of total battery capacity remaining may selectively be displayed.

The controls **174** and display **172** can also be used to set manual programs. For example, module can be set to produce a single color, a sequence of colors, strobe effect or other programs including speed and intensity settings. Demo cycles are also optionally selected.

Referring to FIG. **6** in particular, a grille **142** is shown that covers a fan **418** described infra and shown on FIG. **10**. The fan **418** draws in air through the case **132** and introduces fresh, cool air by way of the vents **146**. Optionally, a thermostat is included to cycle the fan **418** on when required by the internal temperature. By cycling the fan **418** on only when needed, battery power can be conserved. If powered by an external power source, such as regular wall current, then the fan may be always on. Cooling the internal components increases the performance and longevity of the electronic components.

Still at FIG. **6**, indicators **148** are provided. In a preferred version indicators **148** are comprised a combination of an LED light and a button switch. The indicators **148** show which wireless channel the device is then set at. Said button cycles between the available channels. This feature is useful when different channels are desired for separate modules or to avoid interference. For example, if the device and system is used for a house party different rooms can each have modules on a specific channel. In this case, a first room can be set to a first channel so that all the modules in the first room are simultaneously controlled. Then, a second room can contain modules set to a second channel so that they can be controlled independently of those modules on channel on in the first room. Therefore, the capability is provided to have a group of modules in one room to be independently controlled from a group of modules in another room, each running a separate program. The channel assignment may also be remotely assignable by a controller unit or may be automatically assigned to the best available channel.

FIG. **7** shows an example of how a module may be set up when used on a floor, table or other horizontal surface. Bracket **136** and bracket **134** act as legs to support the device. Bracket **134** and **136** are articulable about fastener **138** on a first end and fastener **140** on a second end, respectively. The fastener **138** and fastener **140** are essentially threaded handles that can tighten against the case **132** to fix the positions of the bracket **134** and bracket **136**. In this manner the light clusters **178** can be directed as the operator desires. The bracket **134** and bracket **136** can be fixed together at a position where they overlap to act as a handle, during storage or for overhead mounting.

The device can be mounted overhead by affixing the bracket **134** and bracket **136** together by tightening the fastener **138** and fastener **140**. The series of apertures **150** on both bracket **134** and bracket **136** are provided to accept mounting hardware, such as a bolt or clamp, to securely attach

the device to another object, such as a lighting truss. Ring **176** is provided to tether the device to another object for security and safety.

A lens may be provided that covers the light clusters **178**. The lens can be configured to focus or redirect the light produced by the light clusters. Lenses may also be provided to bend the light, for example, by 15, 25, 30 or 40 degrees. The lenses are easily interchangeable and may cover some or all of the light clusters **178** in a particular module.

Now referring to FIG. **10** where an example of the internal components are shown to further include a heat sink **402**, a carriage **404**, a harness **406**, a central processing unit **408** (CPU), a charger **410**, a converter **412**, a harness **414**, a battery **416** and a fan **418**.

The CPU **408** includes features to control the charging of the battery, DMX signal, wireless signal and all of the features described herein. A wiring harness **414** connects, inter alia, the switch **152**, switch **154**, microphone **156**, switch **158**, switch **160**, sockets **164-170**, the display **172**, controls **174**, each of the individual LEDs in each light cluster **178**, the battery **416**, the charger **410**, fan **418**, antenna **144**, indicators **148** and converter **412**.

The antenna **144** is provided to extend the range of the wireless signals both sent and received by the device. The antenna **144** is preferably retractable into the case **132** by sliding on a carriage **404**. When the operator desires to use the antenna **144** she simply extracts it and when not needed, retracts it inside the protective case **132**.

In normal use the battery **416** provides the power to operate the various features of the device. The battery charger **410** is provided to replenish the battery **416**. If the battery **416** is not used to power the device then an external power supply may be used which is fed into the device through connector **164** into the power converter **412** where the current is converted to a usable amperage and voltage and avoid damage to the CPU **408** and other electronic components.

Heat sink **402** is provided to extract some of the heat generated by the light clusters **178**. In combination with the fan **418**, the heat sink **402** aids in cooling the components of the device.

An important version of the invention can be characterized as a DMX lighting module integrated into a single case that includes a rechargeable battery and a battery charger, a central processing unit (CPU) including a memory module that stored light sequence programs that can be outputted to at least one light cluster. It includes a wireless DMX transceiver that can send and receive DMX signals that are controlled by control panel having a display and controls. Said light cluster is comprised of at least one LED light, often multiple lights that are capable of color output and variable dimming. The CPU is adapted to control said light output and said variable dimming of said light cluster. The memory module is adapted to store a predetermined set of light control commands, programs or instructions and the CPU is adapted to execute said light control commands and output said commands to said LED lights. The wireless transceiver is adapted to receive a wireless DMX signal and to execute a command in said DMX signal to activate an LED light.

Important variations or additions include that the CPU is adapted to independently control each LED light and that said light cluster is comprised of at least: one red LED, one green LED, one blue LED and one white LED. Optionally, each LED is capable of variably outputting light in a predetermined range in a spectrum between ultraviolet and infrared wavelengths. Optionally, said battery has about eighteen hours of battery life. Optionally, said wireless transceiver is adapted to relay a preselected wireless DMX signal to a second DMX lighting module. Optionally it includes a microphone and a microphone sensitivity selector.

Also shown is a DMX lighting system comprising the above module or variations thereof and a wireless DMX transmitter where said DMX transmitter transmits a wireless DMX signal to each of said lighting modules.

The foregoing description conveys the best understanding of the objectives and advantages of the present invention. Different embodiments may be made of the inventive concept of this invention. It is to be understood that all matter disclosed herein is to be interpreted merely as illustrative, and not in a limiting sense.

What is claimed is:

1. A portable DMX compliant lighting module integrated into a single case and comprising:

a rechargeable battery, a battery power indicator and a battery charger;

a central processing unit (CPU) including a memory module;

at least one light cluster;

a wireless DMX compliant transceiver with auto jumping channel frequencies that minimize interference;

said wireless DMX compliant transceiver selectable to any of a predetermined set of channels;

a display and controls to control a function setting;

said function setting is selected from any of: a channel selection, a master-slave synchronization mode, an operation mode, a sound active mode, a light control command or a DMX compliant address;

where said light cluster is comprised of at least one LED light that produces color output and variable dimming;

said CPU controls said light output and said variable dimming of said light cluster;

said memory module stores a predetermined set of light control commands;

said CPU executes said light control commands and outputs a signal to said light cluster;

said wireless transceiver receives a wireless DMX compliant signal and immediately wirelessly rebroadcasts that wireless DMX compliant signal and executes a command in said DMX compliant signal to activate a light cluster.

2. A DMX lighting module as disclosed in claim **1** further characterized in that said CPU independently controls each light cluster.

3. A DMX lighting module as disclosed in claim **1** further characterized in that said light cluster is comprised of at least: one red LED, one green LED, one blue LED, one amber, one ultraviolet and one white LED.

4. A DMX lighting module as disclosed in claim **1** further characterized in that each light cluster is capable of variably outputting light in a predetermined range in a spectrum between ultraviolet and infrared wavelengths.

5. A DMX lighting module as disclosed in claim **1** further characterized in that said battery has at least eighteen hours of battery life for use in most applications.

6. A DMX lighting module as disclosed in claim **1** further characterized in that said wireless transceiver transmits a preselected wireless DMX signal to a second DMX lighting module in a master-slave relationship.

7. A DMX lighting module as disclosed in claim **1** further characterized in that it includes a microphone and a microphone sensitivity selector;

when a sound active mode is selected then said microphone picks up ambient sounds and automatically synchronizes a light effect to the ambient sounds.

8. A DMX lighting system comprising:

at least one lighting module as disclosed in claim **1**;

a wireless DMX transmitter where said DMX transmitter transmits a wireless DMX signal to said lighting module.

9. A portable lighting module integrated into a single case comprising:

a rechargeable battery, a central processing unit (CPU), a memory module, a control, a light cluster and a wireless DMX transceiver;

the wireless DMX transceiver is operatively configured with the CPU;

the control affects a function setting selected from any of: a channel selection, a master-slave synchronization mode, an operation mode, a sound active mode, a light control command or a DMX compliant address;

the light cluster is comprised of at least one LED light that produces light and variably dims;

the wireless DMX transceiver is selectable to transmit and receive a wireless DMX signal on any of a predetermined set of channels or auto-jumping channel frequencies;

the wireless transceiver receives a wireless DMX signal and the CPU executes a command contained in the DMX signal that activates a light cluster;

the wireless transceiver receives the wireless DMX signal and immediately wirelessly re-transmits the wireless DMX signal.

10. A portable lighting module as in claim **9** further characterized in that a light control command is stored in the memory module and is selectively executed by the CPU to activate a light cluster.

11. A portable lighting module as in claim **9** further characterized in that a power cord is operatively connectable to the rechargeable battery that selectively charges the rechargeable battery and provides independent power to the portable lighting module and provides a power connection socket to power another portable lighting module.

12. A portable lighting module as in claim **9** further characterized in that while connected to an external power source the rechargeable battery can be recharging while the portable lighting module remains operable powered the external power source.

13. A portable lighting module as in claim **9** further characterized in that the rechargeable battery has a capacity allowing eighteen hours of use in most applications.

14. A portable lighting module as in claim **9** further characterized in that a pair of brackets are attached to the case and selectively articulate to:

a first position where the brackets perform as supporting legs and are adjustable to aim a direction of the light cluster; and

a second position where the brackets are affixable to a support structure and are adjustable to air the direction of the light cluster; and

a third position where the brackets nest against each other to provide a carrying handle.

* * * * *