SAE TECHNICAL PAPER SERIES

970644

Adaptive Light Pattern - A New Way to Improve Light Quality

Henning Hogrefe and Rainer Neumann
Robert Bosch Corp.

Reprinted from: New Concepts in International Automotive Lighting Technology (SP-1249)

SAE
FEB 27 1997
LIBRARY

International Congress & Exposition
Detroit, Michigan
February 24-27,1997

SAE The Engineering Society For Advancing Mobility Land Sea Air and Space®
INTERNATIONAL

400 Commonwealth Drive, Warrendale, PA 15096-0001 U.S.A. Tel: (412)776-4841 Fax:(412)776-5760

PCNA Ex. 1017
U.S. Patent No. 9,955,551

The appearance of the ISSN code at the bottom of this page indicates SAE's consent that copies of the paper may be made for personal or internal use of specific clients. This consent is given on the condition however, that the copier pay a $7.00 per article copy fee through the Copyright Clearance Center, Inc. Operations Center, 222 Rosewood Drive, Danvers, MA 01923 for copying beyond that permitted by Sections 107 or 108 of the U.S. Copyright Law. This consent does not extend to other kinds of copying such as copying for general distribution, for advertising or promotional purposes, for creating new collective works, or for resale.

SAE routinely stocks printed papers for a period of three years following date of publication. Direct your orders to SAE Customer Sales and Satisfaction Department.

Quantity reprint rates can be obtained from the Customer Sales and Satisfaction Department.

To request permission to reprint a technical paper or permission to use copyrighted SAE publications in other works, contact the SAE Publications Group.

GLOBAL MOBILITY DATABASE

All SAE papers, standards, and selected books are abstracted and indexed in the SAE Global Mobility Database.

No part of this publication may by reproduced in any form, in an electronic retrieval system or otherwise, without the prior written permission of the publisher.

ISSN 0148-7191
Copyright 1997 Society of Automotive Engineers, Inc.

Positions and opinions advanced in this paper are those of the author(s) and not necessarily those of SAE. The author is solely responsible for the content of the paper. A process is available by which discussions will be printed with the paper if it is published in SAE Transactions. For permission to publish this paper in full or in part, contact the SAE Publications Group.

Persons wishing to submit papers to be considered for presentation or publication through SAE should send the manuscript or a 300 word abstract of a proposed manuscript to: Secretary, Engineering Meetings Board, SAE.

Printed in USA

970644

Adaptive Light Pattern - A New Way to Improve Light Quality

Henning Hogrefe and Rainer Neurnann
Robert Bosch Corp.

Copyright 1997 Society of Automotive Engineers, inc

ABSTRACT

In most cases of night time driving the low beam light function is used for the road illumination in front of the car. This conventional low beam function has a constant light pattern: no matter whether the driver is actually driving on a straight or curvy road, whether the road is wet or dry, always the same beam pattern is applied. Test experiences of the last years prove that a headlamp with an ,,adaptive light pattern" having different optimum light pattern adapted to different driving situations should give a better illumination than the conventional constant low beam pattern which can only be a compromise.

In this paper an outline of the basic idea of the ,,adaptive light pattern" is given. Different driving situations and their corresponding optimum light pattern, basic technical concepts and the legal situation regarding homologation of such an advanced lighting system will be discussed.

INTRODUCTION

Automotive headlamps provide for each of the basic light functions (low beam, high beam and fog beam) a fixed static light pattern. Some thirty years ago 200-300 lumen were a good total luminous flux for a low beam headlarnp. This amount of light was at best enough to illuminate the most important parts of the driver's night time viewing zone.
All lighting regulations and techniques were set up to ensure a minimum light quality using available light sources.

The introduction of halogen bulbs around 1965 greatly improved the light quality. In the eighties two-reflector-headlamps for separate low and high beam and advanced reflector technologies further increased the amount of light available for the street illumination.
Now, a low beam light volume of 500 lumen and more can be achieved using halogen bulbs in combination with advanced reflector techniques or even 1000 lumen using gas discharge lamps (HID). Having reached this state of lighting performance the question arises, in which direction further development should be continued. Shall we add, as in the past, more and more light - if technically available - into the static light pattern giving more and more intense illumination in the hot spot or broader side illumination? Recent HID-light pattern applications have shown very good results on this way (Ref. 1, 2).
Another very promising alternative is to direct the available light dynamically into the direction where it is actually needed. Why illuminating the hot spot with full power while driving with low speed on a windy road? Why wasting many lumen on large lateral side illumination while driving with high speed on a straight highway? Hence, the idea is to have a dynamic or ,,Adaptive Light Pattern" (ALP) which always supplies an adapted, optimal light performance for the actual driving situation.
The legal regulations are not yet completely ready for this innovative concept but the technique is now under full development. The ALP topic can cover a wide range of lighting aspects. We want to concentrate here mostly on the main headlamp functions, especially the low beam, because there seems to be the highest potential for improvement of night time traffic safety.

ALP - AN INNOVATIVE LIGHTING CONCEPT

During night time driving the automotive lighting equipment is responsible for illuminating the driver's viewing field under many different driving situations, street and traffic conditions. The following parameters characterize most of these situations:

- Speed:	low - medium - high
- Road condition:	dry -wet - slippery
-Course of the road:	straight - curvy - intersection...
- Road topography:	flat - hilly
- Road type:	highway -country - city...
-Viewing conditions:	clear - rain -fog -snow
- Ambient illumination:	dark - street lights...
- Traffic density:	low - medium - high
- Driver:	age - driving skills...
- Other parameters:	country, tunnel...

At the same time the car must be visible to other traffic members without causing glare or other irritations. Regarding this complex task the conventional static headlamp light pattern can only be a compromise. Usually most of the flux available for static illumination is directed to the central parts of the viewing zone including the range zone of the low or high beam (approx. ± 5" hor./vert. of driving direction). In this zone we certainly have the highest demand for good illumination and therefore also the highest requirements by current ECE and SAE standards.
The rest of the available static beam flux is more or less scattered to the left and right sides of the viewing zone. This light pattern is a compromise in the sense that it fairly covers the most important viewing zones but only to some extent the special zones needed for example for curve illumination, fog conditions, etc. This compromise is only for those headlamps a very good overall solution that have a total flux almost as high as in the case of HID headlamps. But the general idea - even for high flux systems - is, that light (e.g. foreground illumination), which is beneficial in the static beam pattern under normal driving conditions is most likely undesirable in some other situations (e.g. wet roads).
These basic considerations about the static and dynamic light pattern seem to be obvious but they have to be verified by scientific investigations. The goal is to evaluate the potential benefits of a dynamic or adaptive light pattern compared to the conventional static light pattern. Independent from basic research, a few technical realizations using rotatable reflectors have been presented years ago (e.g. Ref. 3, *4)*. First internal field tests and other investigations (Ref. 5, 6, 7) now prove that for most of the above mentioned driving situations different light pattern must be required to obtain an optimal illumination.
The finding is, that no static light pattern, even the sum of all individual light pattern, can deliver the overall optimal headlamp beam pattern. The philosophy of „Adaptive Light Pattern" can achieve this goal by means of detection of the actual driving condition and subsequent switching to the well-adapted light pattern.

The European ECE regulations do not yet allow the realization of the ALP concept. Both, the application of multiple light sources in one headlamp and moving beams are considered as important technical realization possibilities for ALP as wili be pointed oui in ine nexi seciion. But it is neither permitted to use more than 1 light source for the low beam function within one headlamp (and more than 2 light sources each for high beam and fog beam) nor is it generally allowed to apply a movable or rotatable reflector.
There is an exception of this practice: an additional secondary high beam may be horizontally rotatable. Reflector parts may also be movable as long as their optical axis is not moved. Also, it is not explicitly forbidden to have adaptive low, high or fog beam if the adapted light pattern always fulfills the current regulation.
A European EUREKA project called AFS (Advanced Frontlighting Systems) with all major European bulb, headlamp and vehicle manufacturers participating (Ref. 8) has been established to make studies and proposals for new regulations to overcome the current restrictive ECE homologation practice. In the second phase the AFS working group is now testing the basics and limits of adaptive lighting in order to propose new regulations in the third phase.
The US Federal Register, Part 571 (FMVSS 108), for automotive lighting is not as restrictive as the European ECE regulation but the subject also is not yet explicitly introduced.

Once we have realized the potential of adaptive lighting in general and supposed there will be some regulatory framework in a few years, what

what kind of variations can be introduced by ALP? Various adaptation possibilities can be thought of:

- Adaptation of low, high or fog beam pattern
- Integration or combination of low, high and fog beam into one beam
- Adaptation of a headlamp to different standards: ECE left hand drive, ECE right hand drive, USA, Japan
- Variation of shape of the cut-off of a low or fog beam
- Variation of beam inclination
- Variation of the signal image of a headlamp (the appearance to opposing traffic)
- Variation of brightness or colour
- On/off - automatic switching of beams

The first tests and investigations already mentioned above allow some preliminary conclusions which help to select the most important variations and parameters for „Adaptive Light Pattern" headlamps:

Experimental Experiences:

- Speed is a suitable control parameter
- Distinction between city traffic, 25 Mph-zones, rural roads and highway is meaningful
- Oncoming traffic on rural road: Enhanced SPOT is advantageous
- Turns at intersections: Increased side illumination is very much welcomed
- Driving in convoy: Spot illumination should be reduced in favour of large side illumination
- Wet roads: Reduced foreground illumination helps to reduce glaring reflections to oncoming traffic
- Switching between different light pattern components should be harmonic and not too abrupt

Some of these conclusions are nicely illustrated in Fig. 1 showing schematically different driving situations from the bird eye's view and their adapted light pattern. In the left part of Fig. 1 the corresponding active components of a multi-segment headlamp - one realization technique for ALP - are indicated. The most important control parameter, which is quite easily accessible in a modern car, is the driving speed. Driving with high speed requires the attention of the driver to be directed to the far field in the direction where the car is heading instead of being distracted by the foreground scenery or the outer left and right sides of the total viewing zone. It is well known that the driver's view is attracted by those parts of the scenery that have the highest luminance (Ref. 9). Hence, the adaptive light pattern should support to direct the concentration to the most important zone for the current driving situation. Therefore, at high speed, an additional far field spot illumination should be added, accompanied by reduced or normal side and foreground light.

When driving at low or medium speed usually the spot is not needed any more. In this case, the adapted optimum light pattern depends on other parameters: When there is an intersection ahead, a curve or a broad street in an urban area then an enhanced lateral side illumination to the left and/or right is needed. In

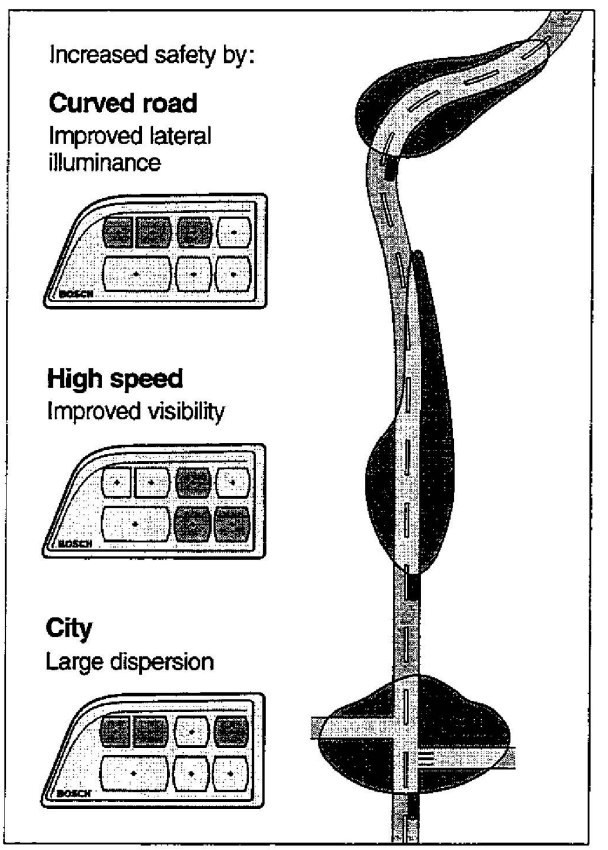

Fig.1: Three standard driving situations with adapted light pattern seen from the bird eye's view.

some cases, e.g. in a city, in a convoy or on wet roads without oncoming traffic (supposed there are means in the own car to detect oncoming traffic), an enhanced foreground illumination may be beneficial. Vice versa, on wet roads with oncoming traffic a reduced foreground diminishes specular reflection by the wet road ahead and therefore also reduces glare to other traffic participants. The transition between different adapted light pattern should always be harmonic and not too abrupt in a manner that has to be found out by detailed testing.

One important measure to assure safety and harmonic transitions is the idea to keep always a „basic light pattern" component static and switched on while the other beam pattern parts, e.g. spot, side illumination etc. will be adaptive.

ALP technique will be more complex than conventional headlamp technique is and it will be undoubtedly a challenge to incorporate it into modern car bodies. On the other hand it can also offei new styling opportunities as it is shown for example in Fig. 2. Recently, some show cars with such stylish model headlamps could already be seen on automobile shows around the world.

TECHNICAL REALIZATION ASPECTS

The design of a headlamp with „Adaptive Light Pattern" has to fulfill the same general requirements as the conventional lighting equipment: cost effectiveness, limited space, stability, life time etc. and it has to deal with the trend to more exotic vehicle front shapes, inclined lenses and low profile reflectors. Additionally, it has to incorporate the ALP-functions.

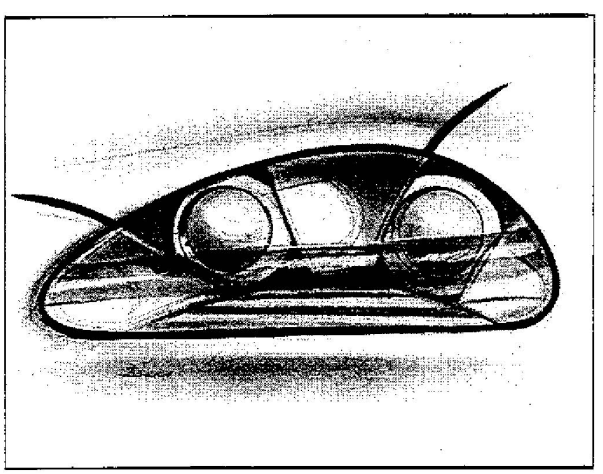

Fig. 2: Example for styling opportunities of ALP headlamps

Once the available space of an ALP headlamp and the cost frame is known it can be decided which technique will be used to make the light pattern adaptive. There is no feasible concept yet known which allows to realize arbitrary light pattern in a single headlamp. In reality, a few major light pattern states, e.g. curve illumination, together with the corresponding adaptation technique have to be selected to realize a powerful ALP headlamp.

There are several techniques to realize an adaptive beam:

- Changes of the light source(s) only
  e.g. moving the bulb inside the reflector, dimming
- Adaptive reflectors
  e.g. moving the reflector (and bulb), moving or deforming parts of the reflector, inserting new reflective surfaces, blocking parts of the beam...
- Adaptive Lenses
  e.g. moving lenses, inserting new lens parts or other optical elements, blocking parts of the lens
- Changes on the whole bulb-reflector-lens system e.g. moving the system, superposition of single beams
- Combinations of the described methods

A lot of patent applications and patents about all of these different methods can be found and it would go beyond the scope of this paper to comment on all of them.
Generally, motorized moving parts should be avoided in a headlamp or should be as simple as possible because complex motorized motions are expensive, need much space and are potentially unreliable. Often a simple movement of the bulb or a rotation of a reflector is not sufficient to achieve a well-adapted light pattern.
On the other hand continuous movements have the advantage that a beam pattern can be continuously changed to another beam pattern whereas other solutions often do not allow the realization of transition states between light pattern.
It has to be found out whether motorized motions of headlamp parts can be done in cost-effective technically elegant way in order to be attractive for ALP. Also, we find that blocking of parts of the beam pattern may be a reasonable technique to realize adaptive light pattern but we prefer solutions where no light must be blocked.
The technique, we want to describe here and which has been realized in samples, is the superposition of single beams.

Fig. 3 illustrates this method: An ALP headlamp with this technique consists of multiple sub-units each having a special light pattern (basic illumination, hot spot, curve illumination, etc.). Depending on the driving situation one to three or four of these sub-units will be activated for superposition of their individual light pattern to build the adapted total light pattern. One advantage of this method is that it is rather inexpensive and the assembly is not too complex if it is possible to merge the sub-reflectors to one or two plastic parts. Also, the sub-units can be optimized very well for specia! illumination tasks (e.g. for the hot spot) and this technique is very reliable as well.

The number of adaptation states must be limited with this technique because each of the multiple sub-units needs considerable space. It is very important to determine in the concept phase of an ALP project the most important driving situations that shall be adaptively illuminated by the headlamp. This yields the total number of sub-units. Then the available headlamp area must be divided in a way that aii individuai iight pattern are well balanced to each other. It is advantageous to use free form reflector layout for some of the beams. This technique, which has been described in an earlier paper (Ref. 10), allows the application of clear lenses and hence avoids some problems with profiled lenses when dealing with multiple closely spaced beams. Fig. 4 shows our early prototype sample which has been realized using multiple free form reflectors incorporated into an existing frame.

This sample received very much interest from our customers as well as from the public and it was useful for some of our first ALP tests. Interesting experiences were collected and contributed to the first conclusions mentioned in the previous chapter. It also turned out that the lighting functions, the balancing of the single components and the operation modes still had to be optimized. Therefore, a further prototype sample is under development. Fig. 5 shows schematically the layout of this new system which again will be based on the superposition method using free form reflectors.

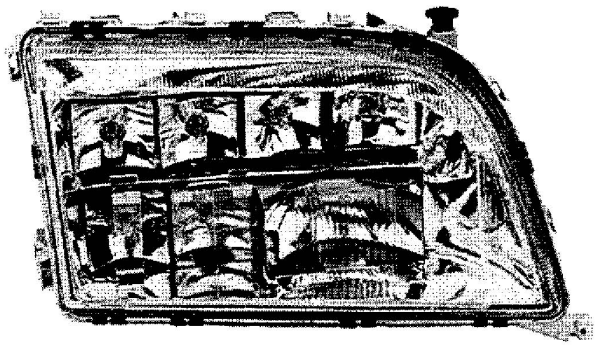

Fig 4: ALP *headlamp* sample

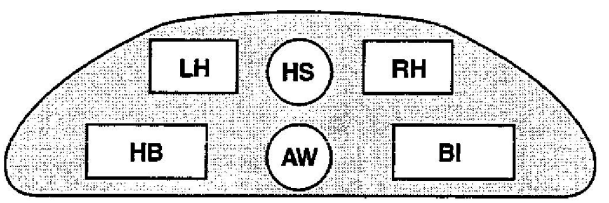

Single components:

LH	Left hand bend	BI	Basic illumination
RH	Right hand bend	AW	Adverse weather illumination
HB	High beam	HS	Hot spot

Fig. 5 Advanced ALP sample layout

This sample will include the basic low beam illumination which is most often active, it will also include a high beam function, a hot spot illumination, a left and right curve light pattern and an adverse weather beam. Both samples, the early one shown in Fig. 4 and the new one, were designed to fit into existing series production headlamp frames. Nonetheless, it would be also feasible to arrange all reflector components in one horizontal line in order to get a low profile headlamp with not more than 70-80 mm in height.

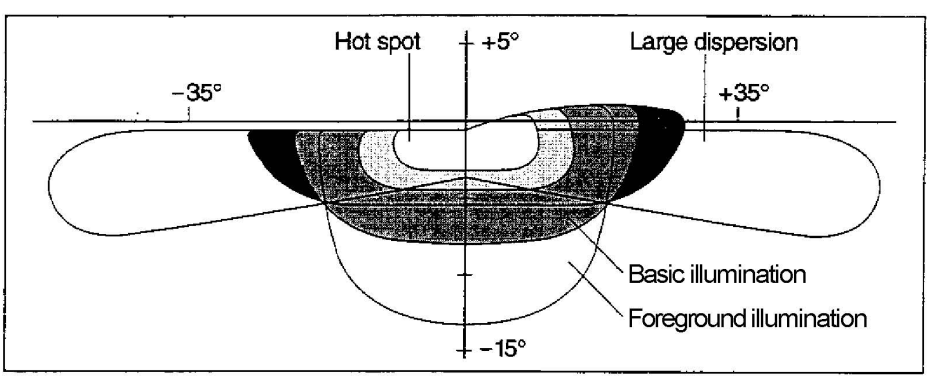

Fig. 3: Light pattern of multiple beam *headlamp* (*Isolux* curves in wall projection):
The individual light *pattern* of multiple sub-units sum up to the total adaptive light pattern

The lighting performance of three of the sub-units in terms of isolux plots is demonstrated in Figures 6 and 7. Fig. 6 shows a comparison between the basic illumination and the additional hot spot illumination. The effect of enhanced range on a straight road by additional hot spot lighting is demonstrated.

Similarly, Fig. 7 shows the effect of curve illumination in comparison to the standard or basic low beam. The two figures clearly show the benefit of a well-adapted light pattern and the excellent performance of this prototype headlamp sample. An additional hot spot improves considerably the driver's view when driving on a straight road in an upper speed range.
Likewise, in a narrow bend a special curve illumination makes pedestrians or obstacles visible for the driver which normally will be hidden in the dark.

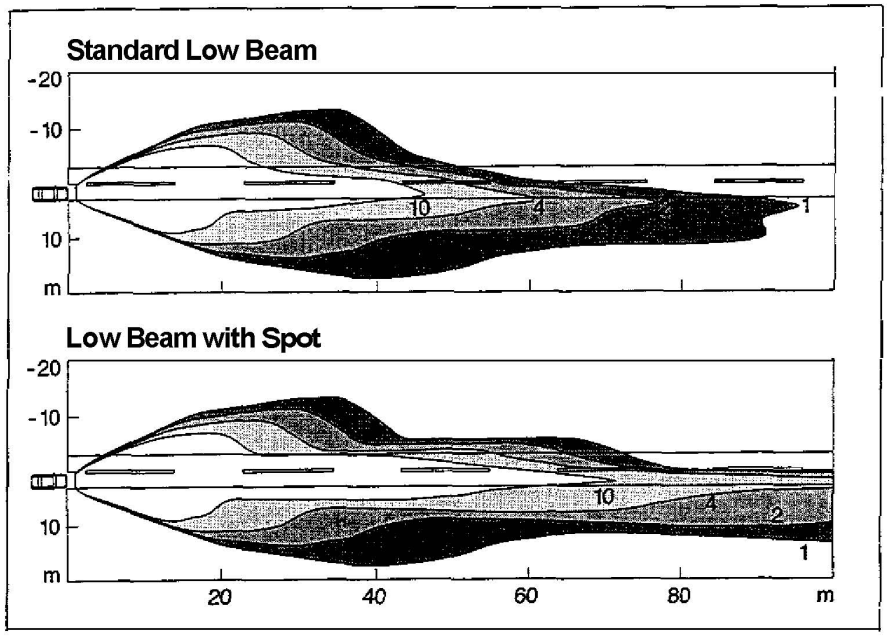

Fig. 6: Comparison between basic low beam and basic low beam with hot spot. Isolux curves from bird eye's view

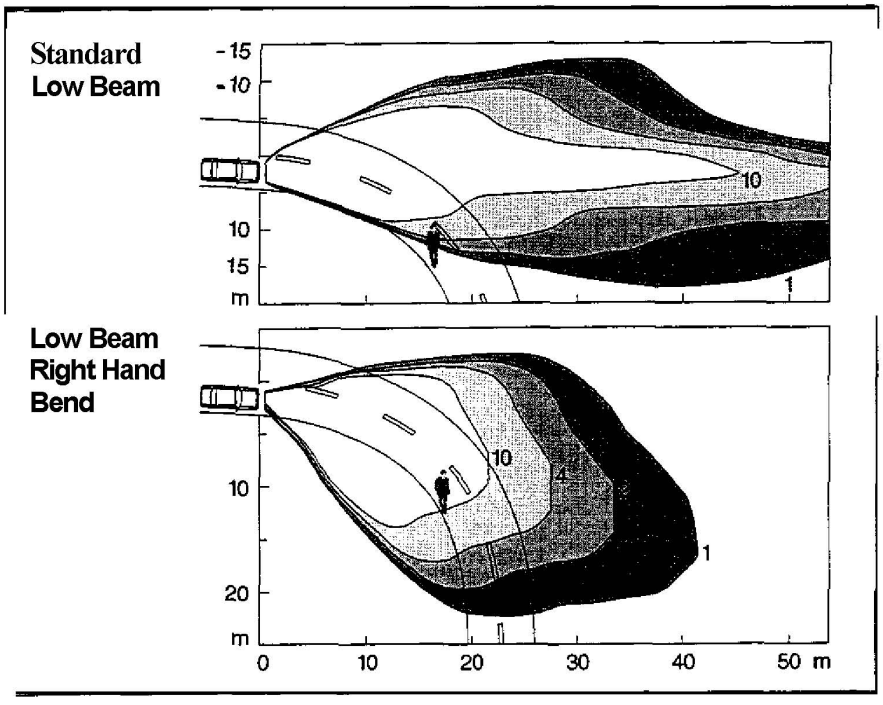

Fig. 7: comparison between basic low beam and right curve illumination, Isolux curves from bird eye's view

CONTROL **OF** ADAPTIVE LIGHT PATTERN

The different adaptation states of an ALP headlamp must be switched or controlled in an appropriate manner. Depending on the number of states and their complexity ALP could be operated manually by the driver. But an additional safety system should not impose more tasks on the driver, it should let him concentrate on his main task to drive his car. Therefore an automatically controlled ALP is necessary. This also offers the opportunity to introduce, together with ALP, even more automatic functions, e.g. automatic light on/off or automatic headlamp leveling etc.
For this electronic control the following components are necessary (Fig. 8): Sensors, which capture the relevant driving parameters, an electronic control unit (ECU) including the switching logic, a power unit and a link between these components, preferably an advanced bus system like CAN (Controller Area Network).
The ECU and the power unit should have a rather general layout with a sufficient number of sensor signal input channels and output channels in order to cover a broad variety of ALP application cases. The sensors and sensor signals will be selected according to the specific application.
The sensor signals of speed and the turn signal state may be considered as a basic set of control parameters which almost every ALP headlamp will use. Adding more and more control parameters by supplying the corresponding sensor signals will increase the number of driving situations that can be detected and adapted to (if the headlamp supplies the corresponding light pattern)

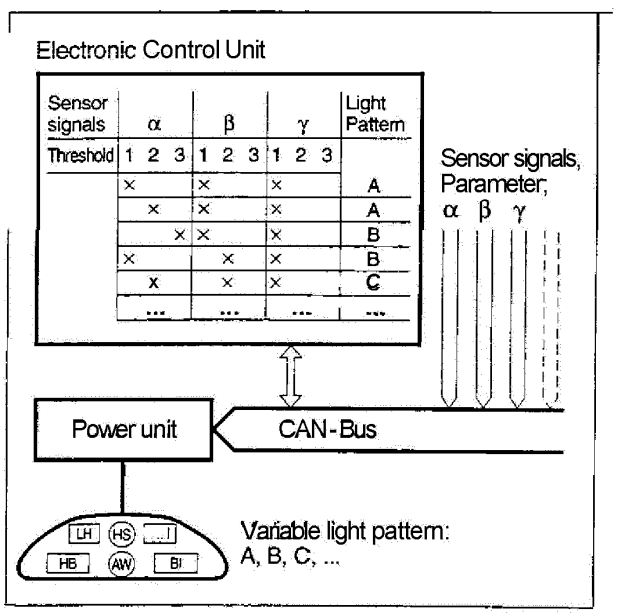

Fig. 8: Basic concept of ALP electronic control.

and it will of course increase the system costs. Hence, a modular control concept can handle ALP applications with a few basic adaptive states and also more complex applications:

	Control Parameter	Light Function
1	Speed, turn signal	Hot spot, improved lateral dispersion intersection illumination
2	+ Steering angle	+ Curve illumination
3	+ Rain sensor	+ Adverse weather condition illumination
4	+ Radar and video sensors	+ Drive in a columne enhanced hot spot in meeting situation
5	+ Navigation	Predictive control to all kind of driving situations

This list , which can be further extended, shows the enormous potential of a well-designed automobile lighting equipment together with an intelligent electronic control concept. To keep the system costs within an acceptable range it is worth while thinking about an integration of the ALP control with other more and more frequently used advanced electronic systems in the car. This may be for example the ABS (Antilock Braking System), VDC (Vehicle Dynamics Control) or ACC (Automatic Cruise Control) which can deliver speed, steering wheel angle, distance and other signals. Also the on board navigation, e.g. the Bosch Travelpilot, which is increasingly often integrated in upper class vehicles, can be combined with the ALP control. Using navigation as a signal source has the advantage that certain signals which are related to the road map (e.g. curve radius) can be delivered in advance. Thus, a curve or an intersection can be adaptively illuminated before reaching actually the point when the steering wheel is turned or the turn indicator is operated. Night time driving tests with the available prototype samples will help to find out the specific properties of predictive and non-predictive control. The ECU

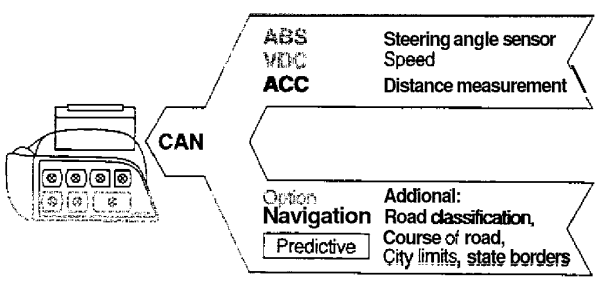

Fig. 9: Possible integration of ALP control with other advanced electronic vehicle control systems

logic will then be programmed correspondingly to apply the adapted light pattern with the right timing.

CONCLUSION

Headlamps with ,,Adaptive Light Pattern" (ALP) can improve current headlamp illumination through continuous automatic adaptation of the headlamp's street illumination to the actual situation.
Prototype headlamps are now ready for test driving. Advanced electronic control concepts for the complete car are available that can realize either simple direct automatic control or even high class predictive control (Fig. 10).
Additionally, the legislation process is started to formally allow this technique to be applied to series headlamp products in the future.

- predictive Control
- Control signals available on CAN-Bus
- Possible Control parameters:
  Road classification. Course of road,
  City limits, state borders

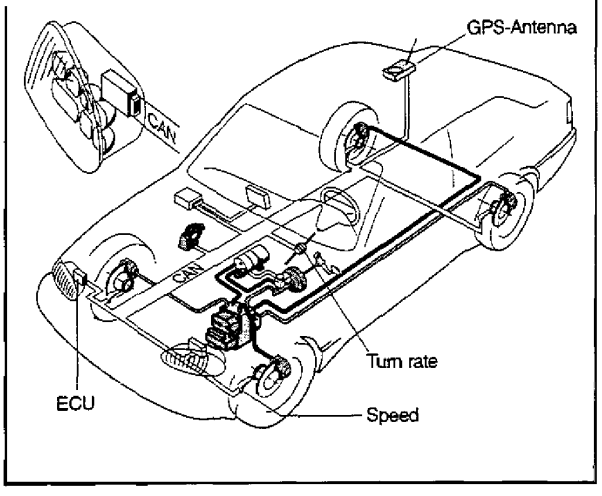

Fig. 10: Car equipped with ALP headlamps including predictive electronic control

Adaptive light pattern headlamps will contribute to more safety in night time traffic. They will help the driver in orientation and will serve as active guidance devices by means of the variations of the light distribution on the road.

REFERENCES

(1) W. Huhn, G. Hege:
High Intensity Discharge Headlamps (HID) - Experience for More Than 3-1/2 Years of Commercial Application of Litronic Headlamps, SAE Technical Paper Series 950591, 1995

(2) R. Neumann:
improved Projector Headlamps Using HID (Litronic) and Incandescent Bulbs, SAE Technical Paper Series 940636, 1994

(3) K. Wada, K. Miyazawa, S. Yagi, K. Takahashi, H. Shibata:
Steerabie Forward Lighting System, SAE Technical Paper Series 890682, 1989

(4) S. Kobayashi, M. Hayakawa:
Beam Controllable Headlighting System, SAE Technical Paper Series 910829, 1991

(5) J. Damasky:
Geometry of the Road Area and Effects on Motor Vehicle Lighting, Progress in Automobile Lighting (PAL), Symposium, Darmstadt, 26.-27. Sept. 1995

(6) R. Neumann:
Future Lighting Technology for Automotive Headlamp Systems
Progress in Automobile Lighting (PAL) Symposium, Darmstadt, 26.-27. Sept. 1995

(7) J. Damasky:
Lichttechnische Entwicklung von Anforderungen an Kfz-Scheinwerfer, Dissertation, Darmstadt, 1995

(8) AFS - Advanced Frontlighting Systems, EUREKA project No. 1403, Phase 1 - Feasibility Study, Final Report, 1996

(9) M. J. Flannagan, M. Sivak, E. C. Traube, M. Aoki:
Effects of Foreground Illumination, Wet Pavement, and Driver Age on Pedestrian Detection Distance, University of Michigan, Transport Research Institute, UMTRI- 95-23, 1995

(10) H. Hogrefe, R. Neumann:
Application of Free Form Reflectors in Modern Headlamp Systems, SAE Technical Paper Series 950593, 1995