US005523193A

United States Patent [19]

Nelson

[11] **Patent Number: 5,523,193**

[45] **Date of Patent: Jun. 4, 1996**

[54] **METHOD AND APPARATUS FOR PATTERNING AND IMAGING MEMBER**

[75] Inventor: **William E. Nelson**, Dallas, Tex.

[73] Assignee: **Texas Instruments Incorporated**, Dallas, Tex.

[21] Appl. No.: **361,007**

[22] Filed: **Dec. 21, 1994**

Related U.S. Application Data

[63] Continuation of Ser. No. 20,891, Feb. 22, 1993, abandoned, which is a continuation of Ser. No. 730,511, Jul. 11, 1991, abandoned, which is a continuation of Ser. No. 453,022, Dec. 20, 1989, abandoned, which is a continuation of Ser. No. 200,389, May 31, 1988, abandoned.

[51] **Int. Cl.**[6] **G03F 7/20**

[52] **U.S. Cl.** **430/311**; 430/20; 346/107.1; 347/134; 358/300

[58] **Field of Search** ..... 430/20, 311; 346/160, 346/107 R, 107.1; 350/338, 607, 608; 358/236, 300; 347/134

[56] **References Cited**

U.S. PATENT DOCUMENTS

4,793,699	12/1988	Tokuhara	350/487
4,799,770	1/1989	Kahn et al.	350/331 R
4,818,098	4/1989	Kahn et al.	353/122
4,888,616	12/1989	Nanamura et al.	355/202
5,150,250	9/1992	Setani	359/221

FOREIGN PATENT DOCUMENTS

0155844	3/1987	European Pat. Off. .	
9003621	4/1990	Germany .	
212843	9/1986	Japan	430/20
62-075671	4/1987	Japan .	

Primary Examiner—Kathleen Duda
Attorney, Agent, or Firm—Brain C. McCormack; James C. Kesterson; Richard L. Donaldson

[57] **ABSTRACT**

A device (**40**) for patterning an imaging member (**46**) is provided. The device (**40**) comprises a light source (**42**) which emits light rays (**44**). Light rays (**44**) pass through a collimator (**45**) to collimate the light rays (**48**). The light then strikes a spatial light modulator (**50**) which is controlled by a computer (**52**) to reflect the light (**54**). The light passes through an imaging member (**56**) to demagnify the pattern for striking imaging member (**46**). Imaging member (**46**) is thus patterned by changing modulator (**50**) by computer (**52**).

19 Claims, 2 Drawing Sheets

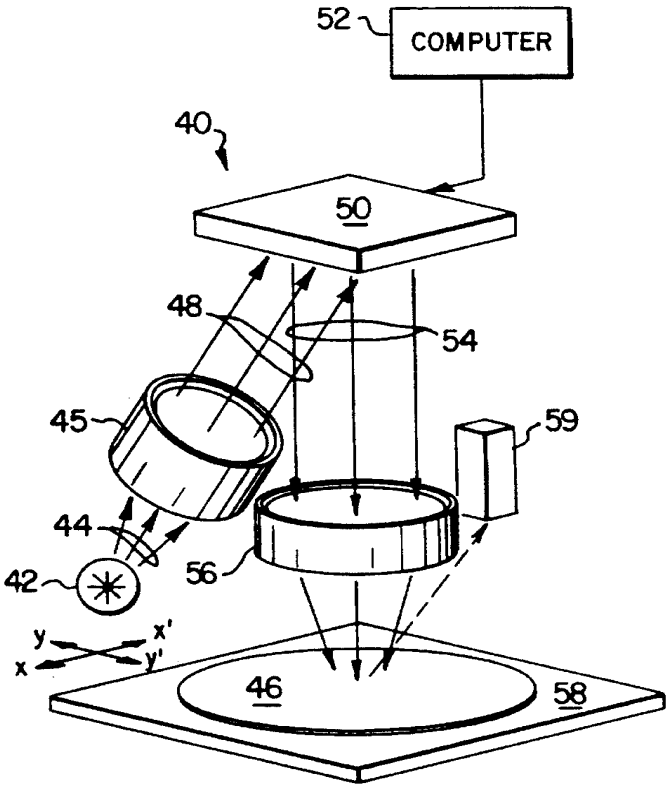

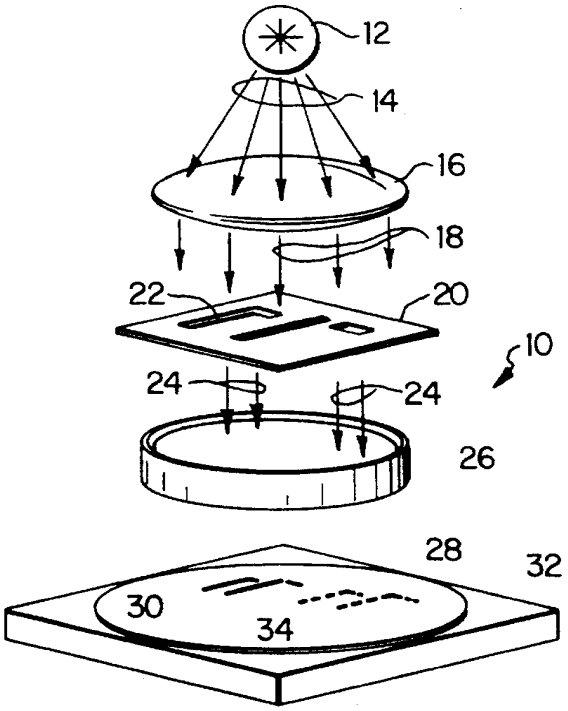

FIG. 1
(PRIOR ART)

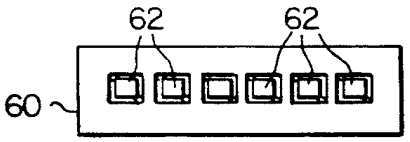

FIG. 3

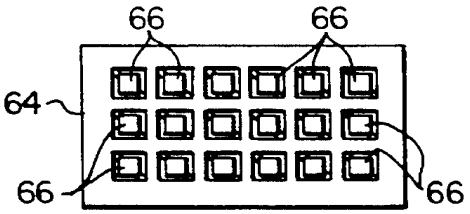

FIG. 4

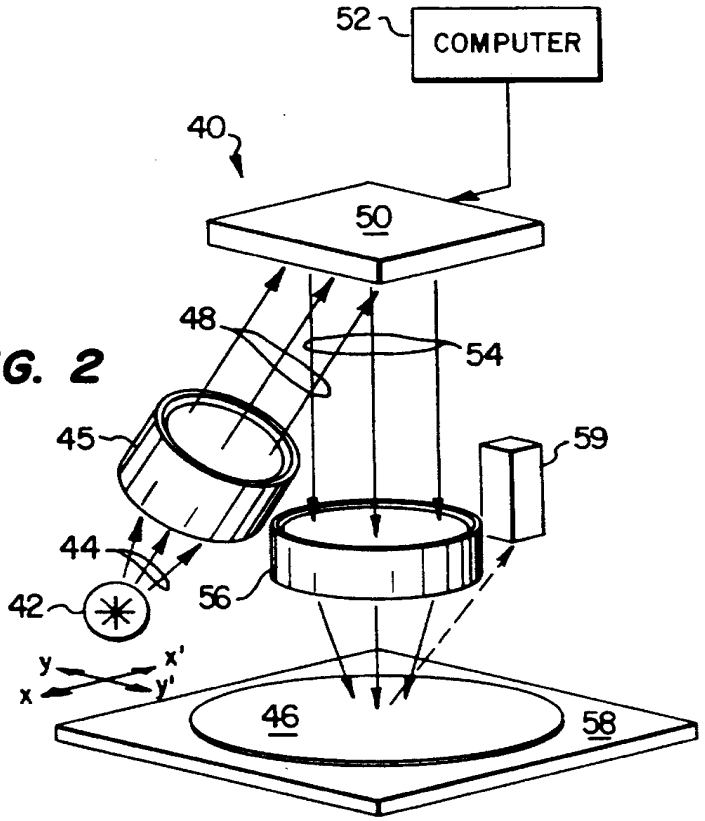

FIG. 2

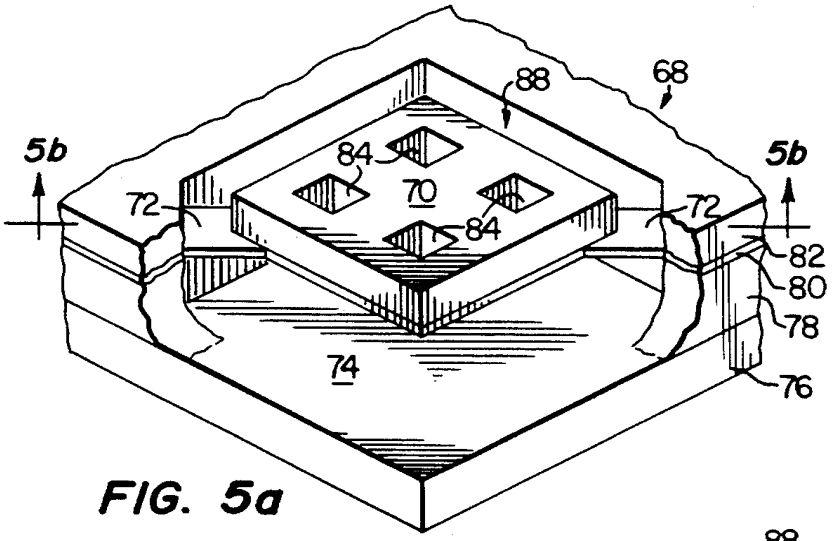

FIG. 5a

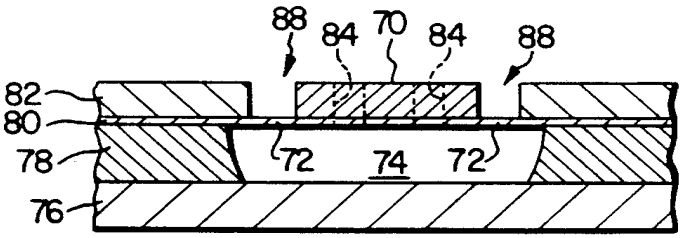

FIG. 5b

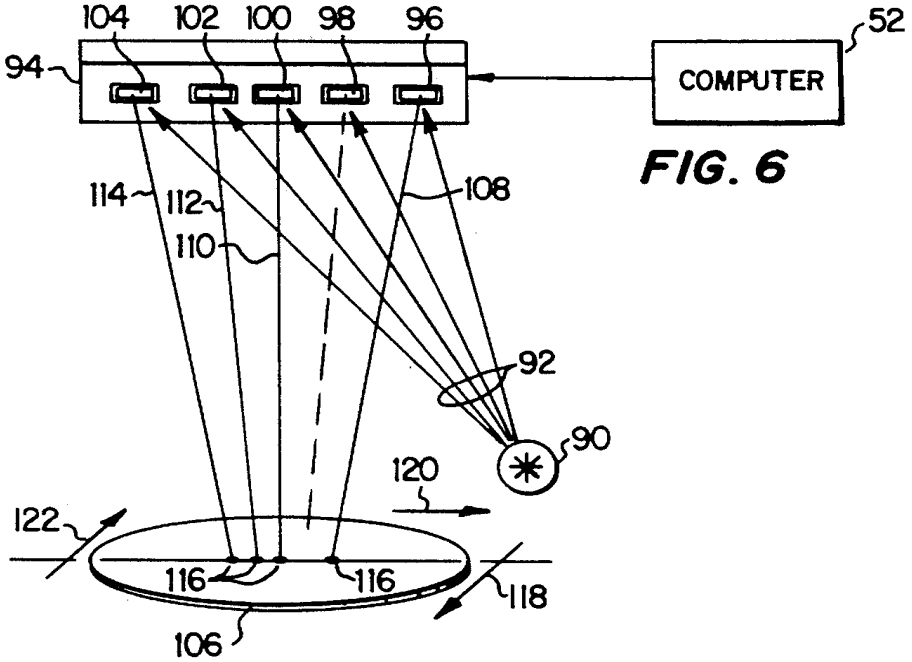

FIG. 6

METHOD AND APPARATUS FOR PATTERNING AND IMAGING MEMBER

This application is a Continuation of application Ser. No. 08/020,891 filed Feb. 22, 1993 abandoned; which is a continuation of application Ser. No. 07/730,511, filed Jul. 11, 1991 abandoned; which is a Continuation of application Ser. No. 07/453,022, filed Dec. 20, 1989, abandoned; which is a continuation of application Ser. No. 07/200,389, filed May 31, 1988; abandoned.

TECHNICAL FIELD OF THE INVENTION

This invention relates in general to techniques for forming integrated circuits, and in particular to a method and apparatus for patterning an integrated circuit on an imaging member with a spatial light modulator.

BACKGROUND OF THE INVENTION

The semiconductor industry is becoming highly specialized in the design of semiconductor devices. Customers are designing specific applications for integrated circuits such as, for example, for sensing temperature and fuel flow in an automobile to improve fuel economy. Typically, these application specific integrated circuits (ASIC) are complex to manufacture and therefore expensive in small volumes.

A common method of fabricating integrated circuit devices requires the use of a mask or reticle to photo-optically transfer a pattern of a structure to a semiconductor wafer. The structure is formed by patterning a layer of photoresist on the semiconductor surface which is then etched to form the structure. An example of a photo-optical device used to transfer the reticle pattern to a semiconductor wafer is commonly termed a stepper, after the step-and-repeat exposure process utilized.

Under present manufacturing techniques, the pattern for a specific integrated circuit is copied onto a computerized master tape. The master tape is then used to create a set of reticles for the lithographic process. A set of reticles is typically created with a complex, extremely expensive piece of equipment known as an Electron Beam Vertical Generator. A set of reticles must be created due to the various levels of structures on semiconductor devices, each of which requires at least one separate reticle. Reticles cost several thousand dollars, so if there are, for example, fifteen layers on a particular design, the cost for reticles alone can be very expensive, and the time to fabricate and inspect them can be lengthy.

After the reticles are created, they are sent to a fabrication area which uses a device such as the stepper to create the specific integrated circuit level by level. A reticle is placed into the Stepper and a photoresist coated wafer is exposed to a light source through the reticle. The exposure process then permits the subsequent development of the photoresist to form the desired pattern therein. The slice is then etched to produce a structure corresponding to the pattern.

After each structure is etched, an operator usually inspects the slice for deficiencies. If a deficiency is discovered, the entire slice may be lost, the reticle must be replaced and the entire process started over. Thus, if an error is not detected until the final layer, the fabrication expense which has incurred is wasted.

This process is both expensive and time consuming. The turn-around time for the creation of a master set of reticles and the fabrication of specific integrated circuits may be

from weeks to months. The total cost for creating a specific integrated circuit is thus a barrier to many potential users.

Thus, there is a need for a method and apparatus for the fabrication of specific integrated circuits at a lower cost with a shorter turn-around time.

SUMMARY OF THE INVENTION

The present invention disclosed herein comprises a method and apparatus for patterning an imaging member which substantially eliminates or reduces problems associated with prior patterning methods and devices. The present invention allows the patterning of an imaging member without the time consuming creation of an expensive set of reticles, and without resorting to direct slice write procedures using electron beam pattern generation.

In accordance with one aspect of the invention, an apparatus for patterning an imaging member is provided. An array of electronically programmable pixels on a semiconductor chip is illuminated by a light source. An optical system focuses light from the source onto the array which is programmed by an electronic controller. Light is reflected from the modulated array through an optical imager which focuses the light onto the imaging member to create the programmed pattern in a light sensitive layer.

In another aspect of the present invention, the array comprises a linear or an area array. The imaging member comprises a semiconductor surface coated with photoresist, and the light source is ultraviolet. Alternatively, the imaging member may comprise a photothermal plastic surface and the light source may be infrared.

It is a technical advantage of the present invention that a specific integrated circuit may be formed in a shorter period of time at a lower cost by eliminating the need for a master set of reticles. More than one type of device may be formed on a single wafer at no additional expense.

BRIEF DESCRIPTION OF THE DRAWINGS

For a more complete understanding of the present invention and for further advantages thereof, reference is now made to the following Detailed Description taken in conjunction with the accompanying Drawings in which:

FIG. **1** is a perspective view of a prior art Stepper;

FIG. **2** is a perspective view of an apparatus for patterning an imaging member in accordance with the present invention;

FIG. **3** is a plan view of a spatial light modulator with a linear array;

FIG. **4** is a plan view of a spatial light modulator in an area array;

FIG. ***5a*** is a cut-away perspective of a pixel;

FIG. ***5b*** is a cross-sectional view of the pixel of FIG. ***5a***; and

FIG. **6** is a side view of a simplified illustration of a raster.

DETAILED DESCRIPTION OF THE INVENTION

Referring to FIG. **1**, an apparatus commonly termed a stepper is constructed in accordance with the prior art for patterning semiconductor devices and is generally identified by the reference numeral **10**. The apparatus **10** comprises a light source **12** having a wave length suitable to expose organic photoresist. Light rays, as indicated by arrows **14**, are emitted from the light source **12** in all directions.

Appropriate optics are provided by collimator **16** to collimate the light rays **14** as indicated by arrows **18**.

The collimated light **18** passes through a reticle **20** which has been uniquely patterned by any appropriate device such as, for example, an Electron Beam Vertical Generator as is well known in the art. The reticle **20** typically comprises a coated glass plate having patterned openings **22** therein to allow the collimated light **18** to pass therethrough. The light, as indicated by arrows **24**, which passes through reticle **20** corresponds to the desired pattern. The light **24** strikes an optical imager **26** which demagnifies the image from the reticle **20** and transfers the image to the wafer slice **28** as indicated by chip **30**. The wafer **28** is coated with photoresist which is sensitive to the wave length of light emitted from the light source **12**.

The wafer slice **28** is carried by a platform **32** which is capable of precise movements in all directions to allow shifting of the slice **28** to a next position for exposure of additional chips as indicated by dashed lines **34**.

As an example, a reticle pattern may be ten centimeters (cm) square, whereas the desired pattern size on the slice may be one cm square. Thus, the collimator optics and the imager optics must be of sufficient quality to each have a field of view equal to the longest dimension on the reticle, ie. the hypotenuse of approximately fourteen cm, at the required level of resolution and uniformity. Additionally, the imager optics must demagnify the reticle image ten times to create patterns having 1 micron or smaller feature size on the slice. Optics having sufficient quality to meet these requirements are very complex and thus form a significant part of the cost of a conventional stepper.

Often the individual chips being patterned on the slice **28** are wider than the permissible field of view of the apparatus **10**. When the chip size is larger than the field of view, it is often necessary to create a mosaic of reticles to form the desired pattern at the chip level through the process of reticle composition. A mosaic increases the number of reticles required for each layer of patterns and requires special care to ensure continuity between each reticle making up the mosaic, both of which increase the time and cost of fabricating the integrated circuit.

After patterning, wafer **28** is removed for developing and subsequent processing steps, after which wafer **28**, is returned to the device **10** for generation of subsequent layers of patterns. Each layer of patterns requires a separate reticle or mosaic of reticles which must be installed into the device **10**. Through operator error, the reticle may occasionally be damaged or installed incorrectly which will destroy the desired pattern on wafer **28**. The invention disclosed herein prevents these and other difficulties encountered with the prior art devices.

Referring to FIG. **2**, an apparatus for patterning an imaging member constructed in accordance with the present invention is generally identified by the reference numeral **40**. The device **40** comprises a light source **42**, for example, infrared, ultraviolet or x-rays, capable of emitting light rays, as indicated by arrows **44**, having appropriate wave length to pattern an imaging member **46**. The light **44** emitted from light source **42** passes through an optical device such as collimator **45** to redirect the light as indicated by arrows **48**. Collected light **48** strikes a spatial light modulator (SLM) **50**. SLM **50** is positioned planar to the imaging member **46** and at a predetermined angle with respect to the light source **42**. SLM **50** comprises a plurality of mirror devices or pixels, not shown, which will be subsequently described in more detail. A digital computer **52** is interconnected to SLM **50** to program the pixels as required.

Light, as indicated by arrows **54**, is reflected from SLM **50** when selected pixel elements are actuated toward an optical imager **56**. The optical imager **56** demagnifies the reflected light **54** to the proper dimensions for patterning the imaging member **46**. The imaging member **46** comprises, for example, a semiconductor substrate coated with a photopolymer such as photoresist or a packaged semiconductor chip device encased in an ablatable or photothermal plastic. A transporting device **58** supports and carries imaging member **46** in the required fashion. If imaging member **46** is a semiconductor wafer, device **58** will comprise a platform for precise two dimensional movement of the slice as indicated by arrows X-X' and Y-Y'. If imaging member **46** is a packaged semiconductor device, transporting device **58** may comprise a conveyor.

In the preferred embodiment, light source **42** comprises an ultraviolet light and imaging member **46** comprises a semiconductor wafer coated with photoresist. Device **58** comprises a stepper type platform capable of precise two dimensional X-X' and Y-Y' movements to move the wafer **28** in a linear or section-by-section motion.

In accordance with the preferred embodiment of the present invention, a digital computer is utilized to individually control the pixels on the SLM. As will be subsequently described in greater detail, each pixel is electronically positioned into an on position, which will reflect light to the imaging member, or into an off position, which will not reflect light to the imaging member. By individually controlling each pixel, it is possible to create any pattern desired on the imaging member. Thus, it is possible to eliminate the need for unique multiple reticles as required in the prior art.

One of the problems inherent with prior art devices was the time consuming reticle realignment process before patterning subsequent layers onto an imaging member. In the prior art, it was necessary for an operator or optical processor to physically align marks on the imaging member with a pattern on a monitor screen. Alignment was accomplished when the marks were positioned with respect to the screen pattern.

On modern steppers, this is accomplished by computer in the following manner. Laser light from a separate source is positioned on an optical diffraction grating previously patterned into the wafer during a prior process step. When the wafer is properly aligned, the signal from the diffracted laser light is maximized. This method is accurate, but require pre-alignment of the slice to position the laser light on the prescribed optical pattern on the wafer. It assumes that the laser system and the reticle projection system are properly registered. If the wafer is moved to a different stepper for later process steps, proper registration of respective layers may be impaired due to stepper to stepper variations. This method is thus susceptible to error, and is dependent on a precise optical grating pattern on the wafer that may, in some process steps, be affected by subsequent processing or material layers.

An advantage of the present invention is that by virtue of the dynamic program ability of the SLM, a through-the-lens alignment of the wafer can be accomplished that eliminates the need for a separate alignment system, and guarantees registration of the light modulating member (SLM) to the imaging member regardless of intervening factors. This is accomplished by selectively activating elements of the SLM under computer control to modulate light onto the regions of the wafer known to contain alignment key patterns. Separate pixel elements on the SLM chip could be incorporated for this purpose, or a separate light source of a wavelength

chosen to not expose the photoresist could be used. When the wafer and the SLM chip were correctly registered, the return signal detected by light pattern detector **59** would give a suitable indication. By using the exposing element (SLM) to locate the imaging member **46** (wafer) misregistration, tolerances could be controlled in a highly reliable manner.

An additional benefit in the present invention is the ability to pattern photoresist on an imaging member in a vacuum. In the prior art, it was impractical to use an evacuated environment due to the necessity to change reticles. In the present invention, reticle interchange is eliminated by the SLM which may therefore be installed in an evacuated optical system. Thus inorganic photoresist which is developable by short wave length light such as I-line and excimer laser ultraviolet and x-rays may be used to pattern a semiconductor surface in a vacuum. It was not practical, prior to the present invention, to use short wavelength light due to the attenuating influence of air in an unevacuated system. As is well known in the art, inorganic photoresist developed with short wave length light provides superior pattern resolution.

Referring to FIG. **3**, a spatial light modulator **60** arranged in a linear array is shown in plan view. The linear array comprises a plurality of pixels **62** each approximately fifteen microns square, only a portion shown for ease of illustration. The number of pixels **62** may vary from 1,000 to over 2,400 per inch, depending upon the use of the device. Each pixel **62** is configured to allow movement by electrostatic control as will be described subsequently in more detail. Since each of the pixels **62** can be independently controlled between on and off conditions, the SLM is capable of assuming a wide variety of reflective configurations.

FIG. **4** illustrates an example of an SLM **64** configured in an area array. The number of individual pixels **66** varies depending upon the use of the SLM **64**. The pixels **66** are constructed in the same fashion as those in a linear array as will be subsequently described in more detail.

In FIG. **5***a*, a partially cut-away perspective of a pixel **68** is illustrated. A pixel of the type used herein is disclosed in Hornbeck U.S. Pat. No. 4,662,746, May 5, 1987, to Hornbeck, as typically used with an electrophotographic printing machine, and is incorporated herein by reference. The pixel **68**, clearly shown as mirror **70**, is electrostatically positioned into an on position or an off position by an electronic controller.

The mirror **70** covers a shallow well **74** which is typically formed over a silicon substrate **76** which contains addressing logic. Substrate **76** is coated with a layer **78** of sacrificial material which acts as an insulator. A hinge layer **80** comprising an aluminum/titanium/silicon (Al/Ti/Si) alloy is formed over the layer **78**. The hinge layer **80** forms the torsion hinges **72** about which mirror **70** pivots. A final beam layer **82** comprising the same Al/Ti/Si alloy as layer **78** is formed over layer **78**. The layer **78** and the beam layer **82** are separately applied layers of the same material to minimize stress which could cause warping or curling of the hinges **72** on the mirror **70**.

Plasma etch access holes **84** are provided through mirror **70** to allow etching of the sacrificial spacer layer **78** under the mirror **70** to form the well **74**. A plasma etch access gap **88** formed to define the perimeter of mirror **70** also assists with the etching of layer **78** and allows mirror **70** to pivot about hinges **72**.

Referring to FIG. **5***b*, the pixel **68** is illustrated in cross-section approximately along line **5***b* of FIG. **5***a*. Pixel **68** can thus be seen to comprise consecutive layers. Silicon substrate layer **76** is coated with sacrificial spacer layer **78**. Layer **78** is coated with a relatively thin layer of aluminum/titanium/silicon alloy to form hinge layer **80** which is then covered by a relatively thick layer of the same aluminum/titanium/silicon alloy to form beam layer **82**. After the etching processes well **74** and gap **88** are formed.

Typical dimensions for pixel **68** would be as follows: mirror **70** is fifteen microns square, layer **78** is four microns thick, hinge layer **80** is eight hundred Angstroms thick, beam layer **82** is thirty-six hundred Angstroms thick, access holes **84** are two microns square, plasma etch access gap **86** is two microns wide and hinges **72** are three microns long and two microns wide.

Silicon substrate **76** typically has addressing circuitry, not shown, formed on its surface. Pixel **68** is operated by applying a voltage between metal layers **80–82** and address electrodes on substrate **76**. Mirror **70** and the exposed surface of substrate **76** form the two plates of an air gap capacitor and the opposite charges induced on the two plates by an applied voltage exert an electrostatic force attracting mirror **70** to substrate **76**. This attractive force causes mirror **70** to bend at hinges **72** towards substrate **76**. In effect, this gives mirror **70** the capability of an on position or an off position which may be electronically controlled by a computer.

Thus, in a linear array as shown on FIG. **3**, the SLM will reflect a line of light corresponding to each pixel in an on position. By signalling individual pixels to be on or off, any variation of a straight line may be produced on an imaging member. In the area array of FIG. **4**, by turning the pixels on or off, an area image may be formed. In both the linear and area arrays, it is possible to form any desired image on an imaging member by programming a computer to control the SLM.

Referring to FIG. **6**, the effects of light reflected from a spatial light modulator onto an imaging member to form a raster line is shown in greatly simplified form. A light source **90** emits light beams **92** onto a spatial light modulator **94**. Individual pixels **96**, **98**, **100**, **102** and **104** are preprogrammed by an electronic controller **52** to be in the on or off position. In the on position, light from light source **90** is reflected toward imaging member **106** as shown by line **108** from pixel **96**, line **110** from pixel **100**, line **112** from pixel **102** and line **114** from pixel **104**. When light strikes imaging member **106** an image is formed thereon as indicated by dots **116**. A pixel in the off position, as indicated by pixel **98**, will not reflect light towards the imaging member **106** and, therefore, no image will be formed thereon. In actual practice, there could be from 1,000 to over 2,400 individual pixels to form images on the imaging member.

In operation with a linear array of pixels, a linear shaped image or raster will be formed on imaging member **106**. As imaging member **106** is moved, the linear images formed by the SLM **94** may be continuously revised by electronically addressing the pixels with the electronic controller. The electronic controller turns the individual pixels on if an image is to be formed and off if no image is to be formed. By continuously revising the SLM **94** electronically, a line of any length up to and including the entire width of imaging member **106** may be created. Therefore, the desired pattern may be created by either of two methods for moving the imaging member **106**.

In the preferred method, the imaging member **106** would be moved in a direction **118** perpendicular to the raster formed by SLM **94**. The entire width of the SLM **94** is patterned in one continuous pass and the member **106** is then

stepped in a direction **120** parallel to the raster a necessary distance to position the next pattern. The member **106** is again translated in a direction **122** perpendicular to the raster and so on until the entire pattern is transferred to the member **106**.

Alternatively, an area array spatial light modulator would create an area image which can be reprogrammed to form the next area image while the imaging member is stepped an appropriate distance in a manner analogous to the operation of the wafer stepper using a conventional reticle pattern.

Although the present invention has been described with respect to a specific preferred embodiment thereof, various changes and modifications may be suggested to one skilled in the art and it is intended that the present invention encompasses such changes and modifications as fall within the scope of the appended claims.

What is claimed is:

1. A method for patterning an imaging member having an organic photoresist layer, comprising the steps of:

emitting light from a source, said light having a short wavelength suitable to expose said organic photoresist layer on said imaging member and to render said organic photoresist layer sensitive to development;

optically focusing said light onto an array of positionable mirror devices;

positioning selected ones of said mirror devices in response to an electrical signal to provide a pattern reflected therefrom; and

optically imaging said reflected pattern onto the imaging member to form a pattern of reacted organic photoresist in said organic photoresist layer.

2. The method of claim **1**, wherein the step of positioning said mirror devices comprises generating an electrical signal from an electronic controller to pivot said mirror devices, each to an on position or an off position.

3. The method of claim **1**, said method further comprising the step of positioning selected other ones of said mirror devices in response to an alignment signal and monitoring a return signal of reflected light, said return signal indicating the degree of misregistration of the imaging member with respect to said array of mirror devices.

4. A method for manufacturing a semiconductor device, comprising the steps of:

creating a digitized model of an integrated circuit;

programming a spatial light modulator corresponding to said model;

optically focusing light from a light source onto said modulator;

reflecting said light from said modulator corresponding to said model through an optical imager; and

passing a photoresist coated semiconductor wafer past said optical imager to transfer said model to said wafer to form the semiconductor device.

5. The method of claim **4**, wherein the step of programming comprises electronically controlling said modulator with a computer.

6. The method of claim **5**, wherein the step of electronically controlling further comprises electrostatically attracting a hinged mirror about said hinge to a silicon substrate to position said mirror to reflect light onto said semiconductor wafer or to reflect light away from said semiconductor wafer.

7. A method for patterning an imaging member having a layer of photosensitive material comprising the steps of:

selecting a frequency band from the group consisting of the ultraviolet, x-ray, and infrared bands;

emitting light having a frequency within said selected frequency band from a source;

optically focusing said light onto an array of electronically programmable mirrors;

programming said mirrors and rotating them to an on position or an off position to provide a selected one of a plurality of patterns which may be reflected therefrom; and

optically imaging said reflected pattern onto the imaging member to form a pattern of reacted photosensitive material in said layer of photosensitive material.

8. The method of claim **7** wherein said emitted light is ultraviolet (UV).

9. The method of claim **7** wherein said emitted light is infrared.

10. The method of claim **7** wherein said imaging member is a integrated circuit chip.

11. The method of claim **7** wherein said imaging member contains photothermal plastic.

12. A method of patterning a semiconductor substrate, said method comprising the steps of:

providing a digitized model of an integrated circuit;

forming a layer of photoresist on a semiconductor substrate;

emitting light from a source;

optically focusing said light onto an array of electrostatically positionable mirror devices;

electrostatically positioning selected ones of said mirror devices in response to an electrical signal;

generating said electrical signal, said electrical signal dependent upon said digitized model such that the positioning of said mirror devices corresponds to said digitized model; and

optically imaging said reflected pattern onto the semiconductor substrate to form a pattern of reacted photoresist in said layer of photoresist.

13. The method of claim **12** wherein at least one of the steps occurs in an evacuated environment.

14. The method of claim **13** wherein said light source provides a short wavelength light.

15. The method of claim **14** wherein said photoresist is an inorganic photoresist.

16. The method of claim **14** wherein said light source is the I-line of a light source.

17. The method of claim **14** wherein said light source is an ultraviolet excimer laser.

18. The method of claim **12** and further comprising the step of electrostatically positioning selected other ones of said mirror devices in response to an alignment signal and monitoring a return signal of reflected light which would indicate the degree of misregistration of the semi-conductor substrate with respect to said array of electrostatically positionable mirror devices.

19. The method of claim **12** wherein the light emitted from said source has a frequency selected from the group consisting of the ultraviolet, x-ray, and infrared frequency bands.

* * * * *