US 20040052090A1

(19) United States

(12) Patent Application Publication (10) Pub. No.: US 2004/0052090 A1

Pederson (43) Pub. Date: Mar. 18, 2004

(54) LED WARNING SIGNAL LIGHT AND MOVEABLE ROW OF LED'S

(76) Inventor: John C. Pederson, St. Cloud, MN (US)

Correspondence Address:
VIDAS, ARRETT & STEINKRAUS, P.A.
6109 BLUE CIRCLE DRIVE
SUITE 2000
MINNETONKA, MN 55343-9185 (US)

(21) Appl. No.: 10/640,858

(22) Filed: Aug. 13, 2003

Related U.S. Application Data

(63) Continuation of application No. 10/016,989, filed on Dec. 13, 2001.
Continuation of application No. 09/586,221, filed on Jun. 2, 2000.

Publication Classification

(51) Int. Cl.[7] F21V 7/04
(52) U.S. Cl. 362/555

(57) ABSTRACT

A light emitting diode (LED) warning signal light, the warning signal light comprising a plurality of light sources constructed and arranged with a reflector or cullminator, the LED light source being in electrical communication with a controller and a power supply, battery, or other electrical source. The warning signal light provides various colored light signals for independent use or use by an emergency vehicle. These light signals may include a strobe light, revolving light, an alternating light, a flashing light, a modulated light, a pulsating light, an oscillating light or any combination thereof. Additionally, the warning signal light may be capable of displaying symbols, reverse characters, or arrows. The controller may further be adapted to regulate or modulate the power intensity exposed to the illuminated LED's to create a variable intensity light signal.

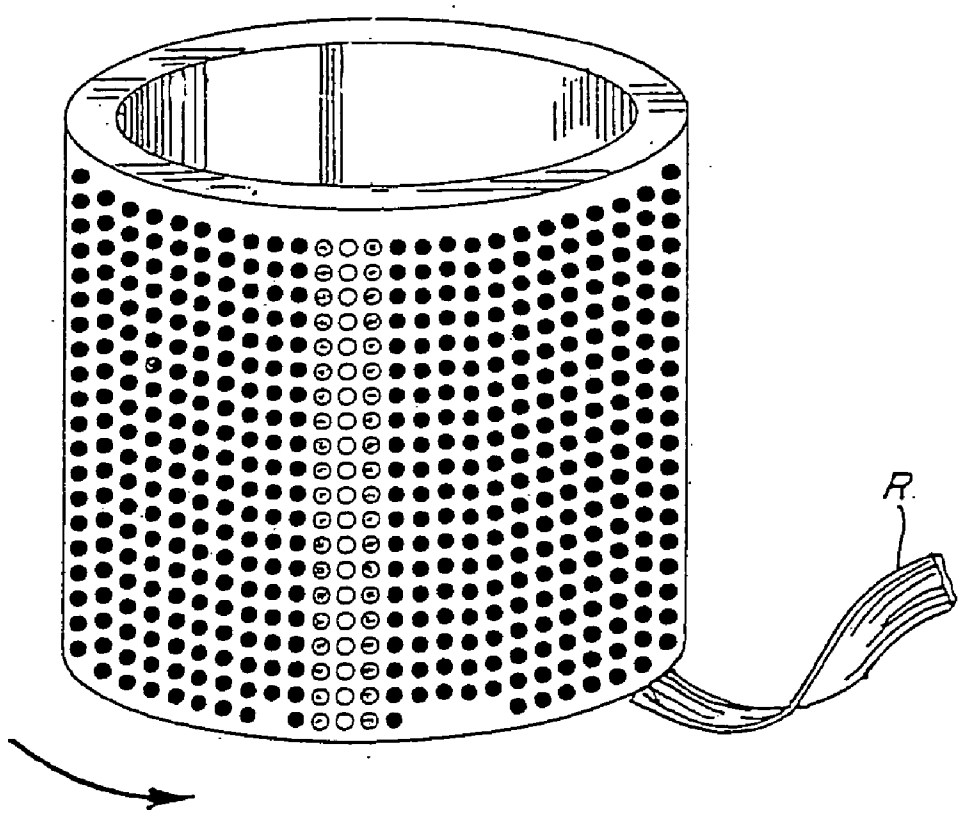

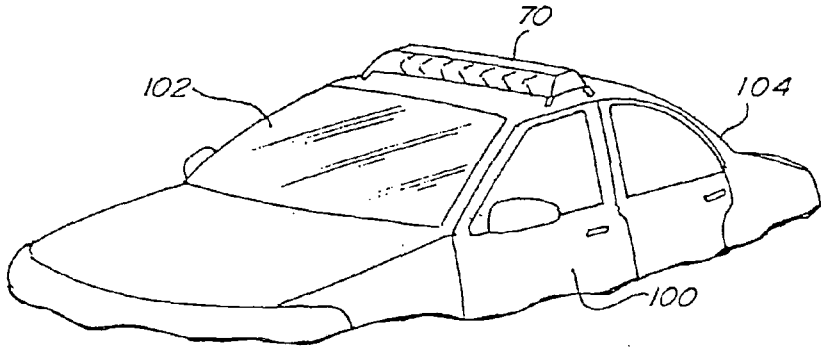

Fig. 1.

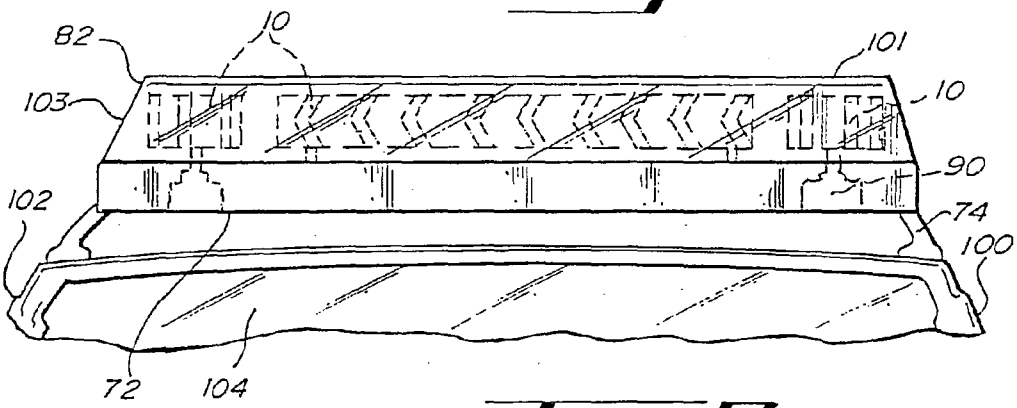

Fig. 2.

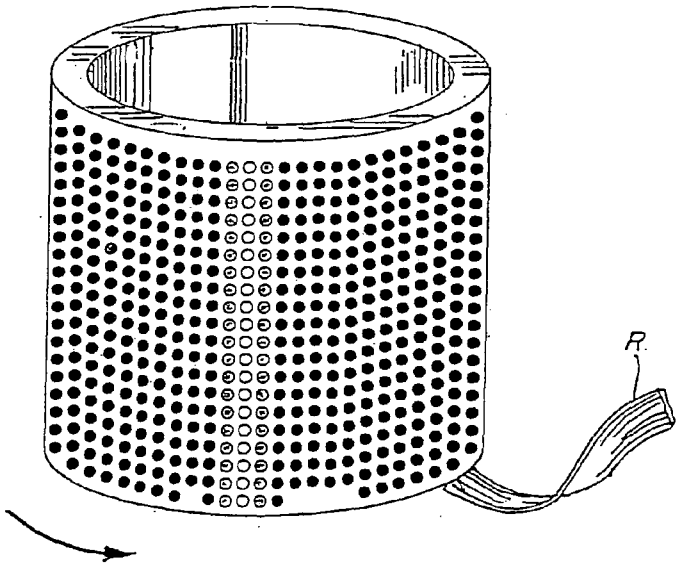

Fig. 4.

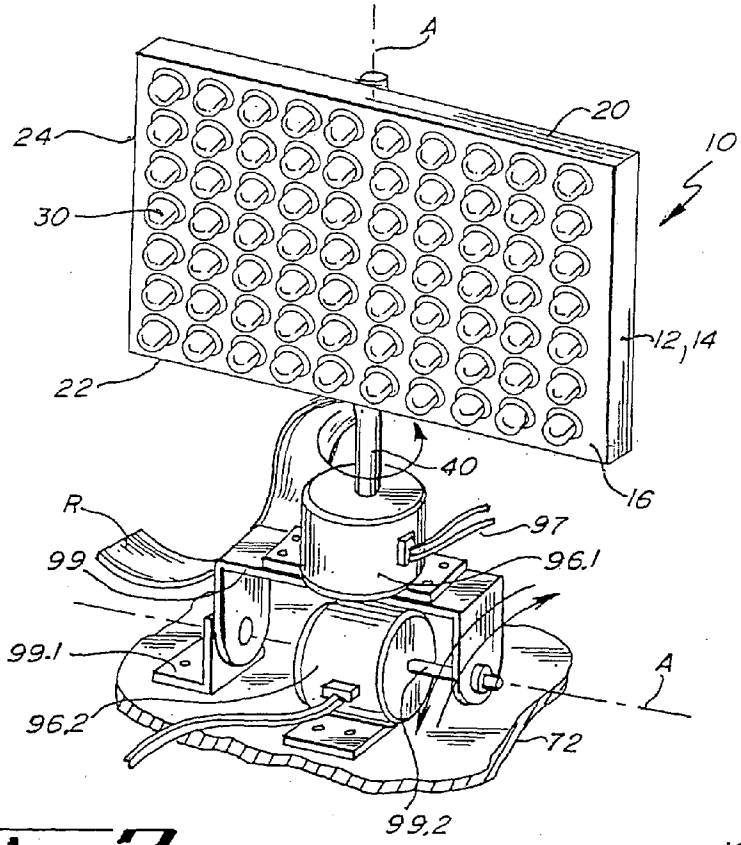

Fig. 3.

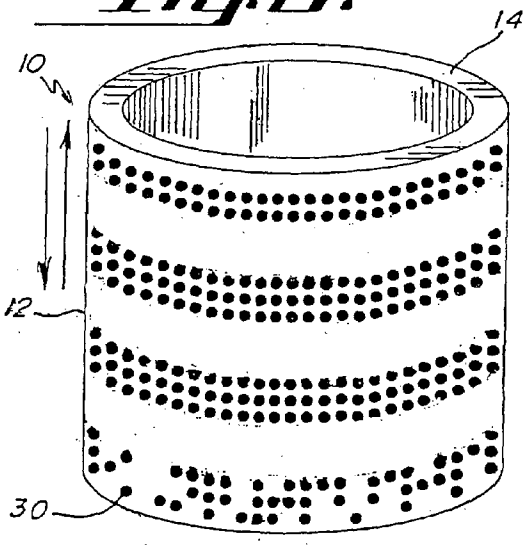

Fig. 5.

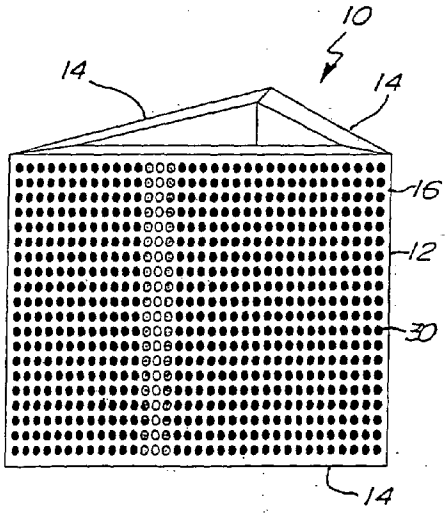

Fig. 6.

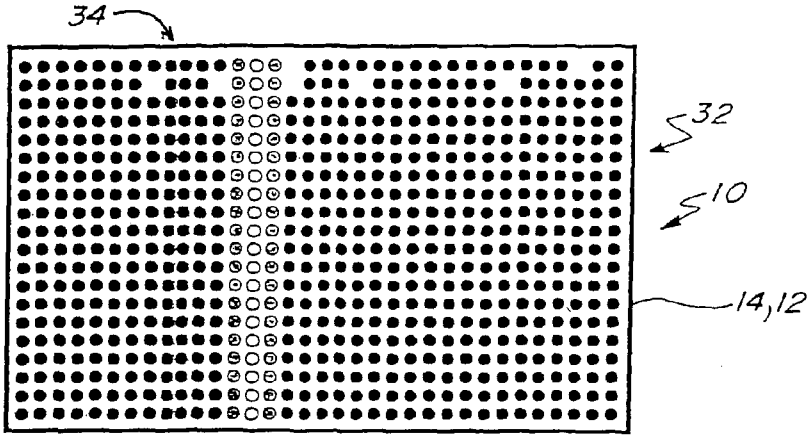

Fig. 7.

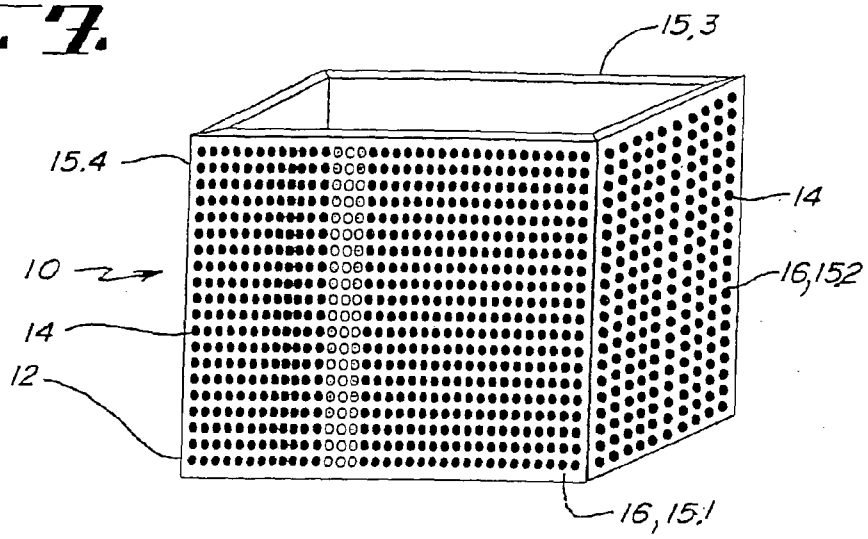

Fig. 8.

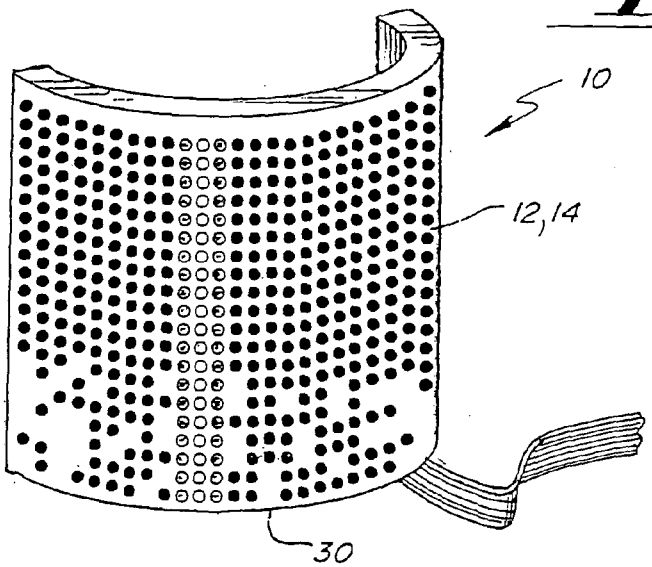

Fig. 12.

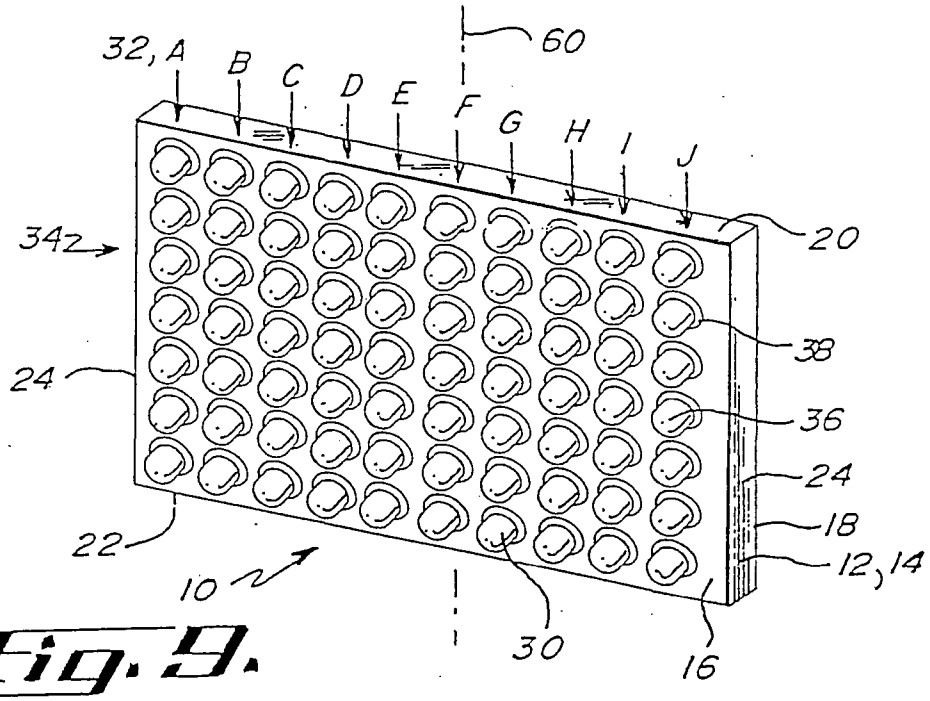
60
32, A
B
C
D
E
F
G
H
I
J
34z
20
38
24
36
24
18
12, 14
22
10
30
16

Fig. 9.

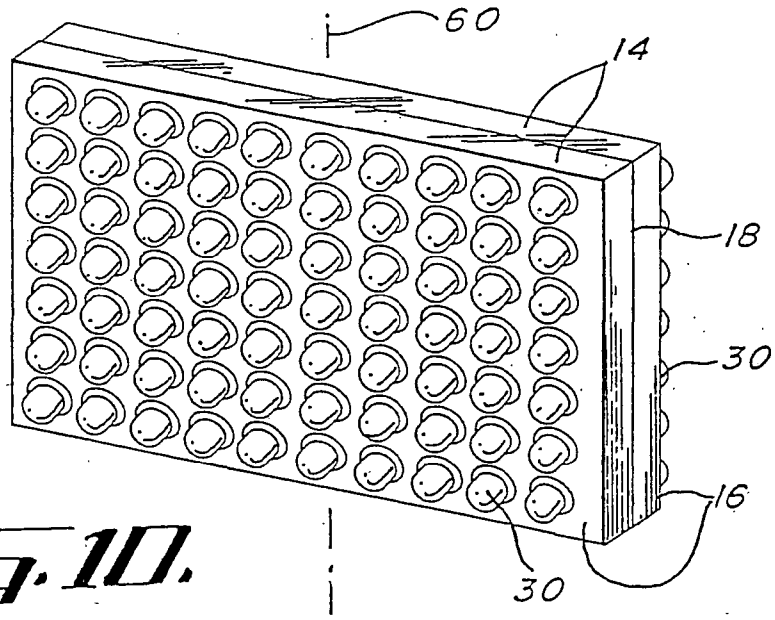
60
14
18
30
16
30

Fig. 10.

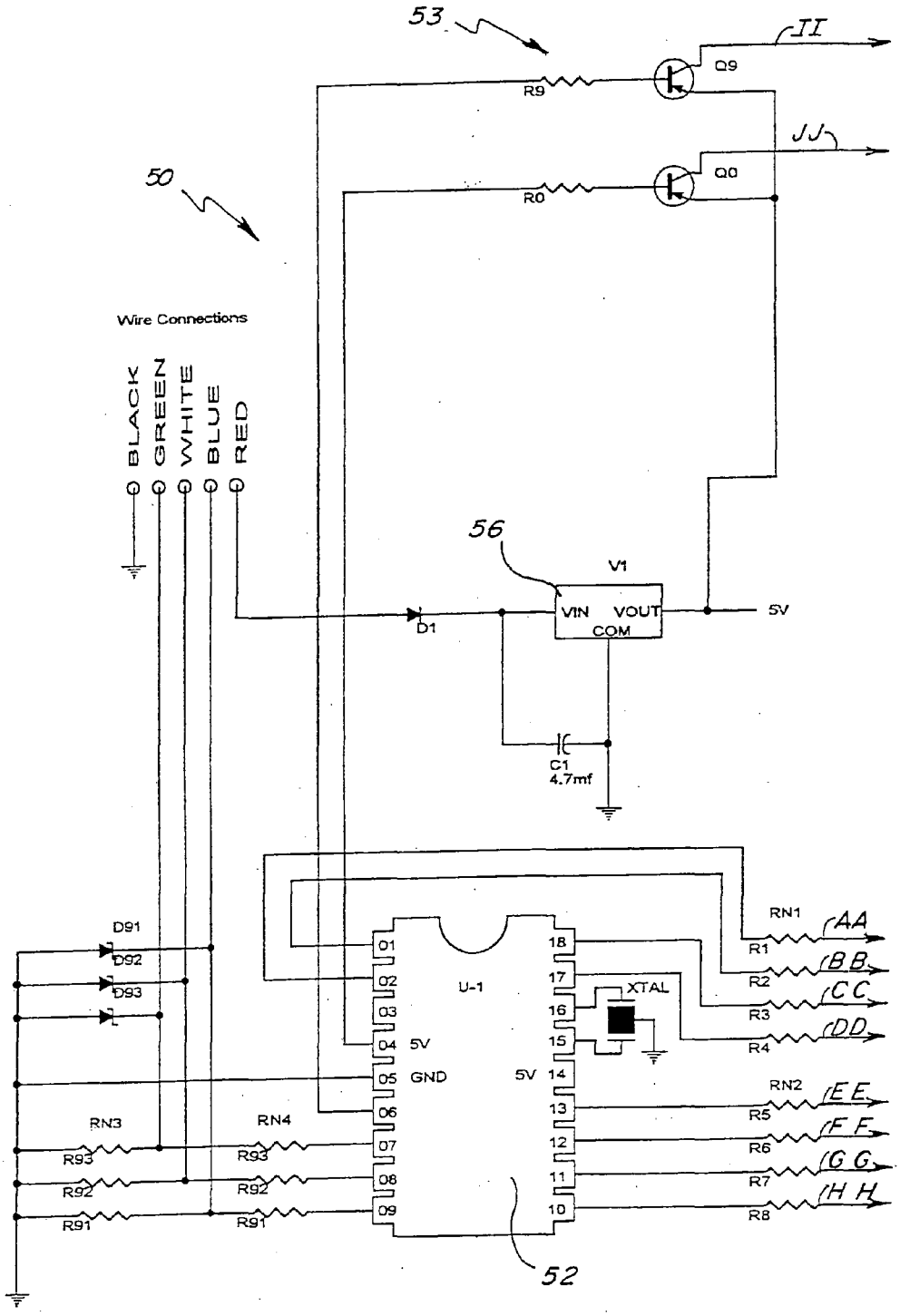
53
II
Q9
R9
JJ
Q0
R0
50
Wire Connections
BLACK
GREEN
WHITE
BLUE
RED
56
V1
VIN
VOUT
COM
5V
D1
C1
4.7mf
D91
D92
D93
U-1
XTAL
5V
GND
RN1
AA
R1
BB
R2
CC
R3
DD
R4
RN2
EE
R5
FF
R6
GG
R7
HH
R8
RN3
RN4
R93
R92
R91
52

Fig. 11A

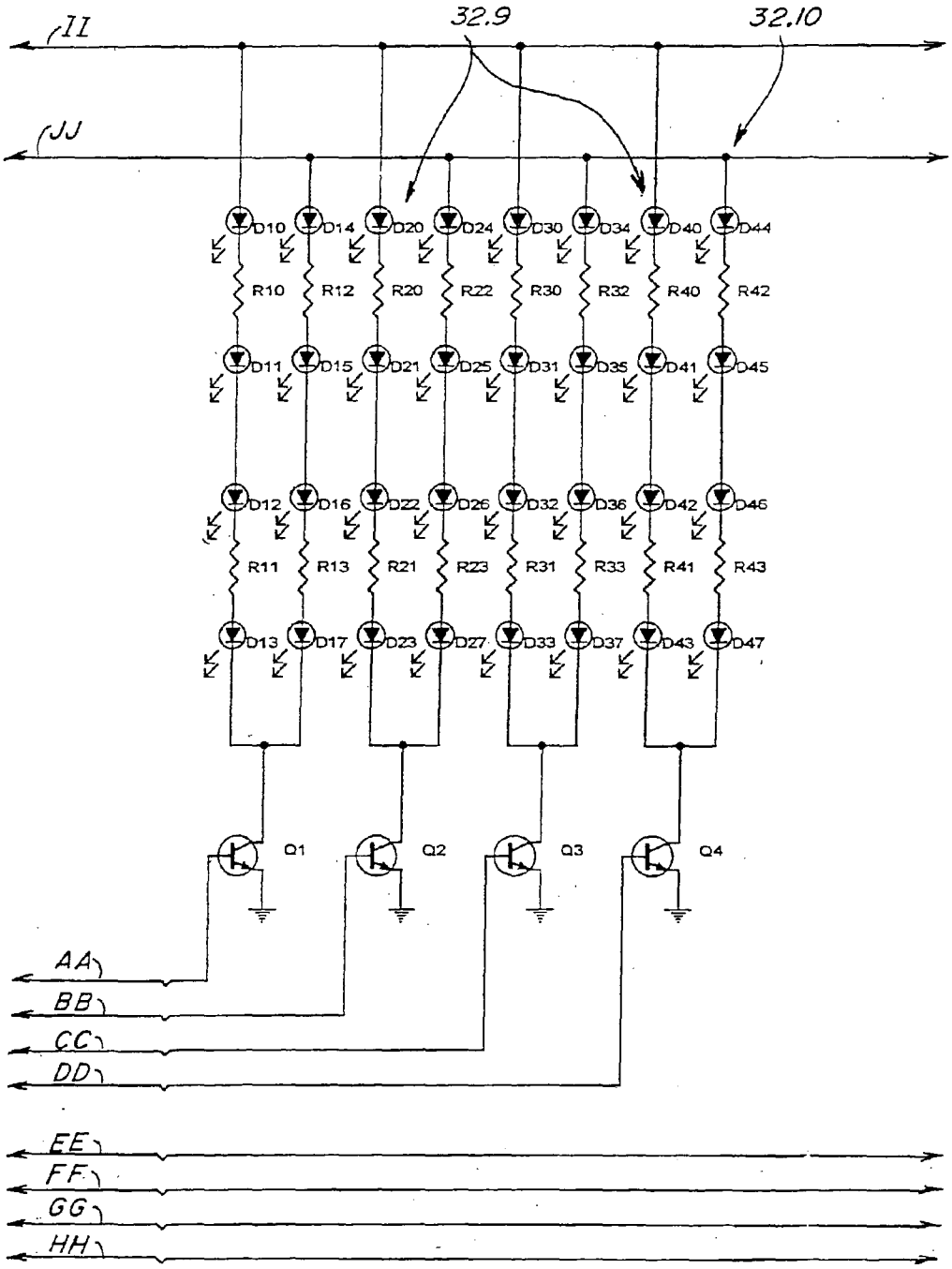
II
JJ
32.9
32.10
D10
D14
D20
D24
D30
D34
D40
D44
R10
R12
R20
R22
R30
R32
R40
R42
D11
D15
D21
D25
D31
D35
D41
D45
D12
D16
D22
D26
D32
D36
D42
D46
R11
R13
R21
R23
R31
R33
R41
R43
D13
D17
D23
D27
D33
D37
D43
D47
Q1
Q2
Q3
Q4
AA
BB
CC
DD
EE
FF
GG
HH

Fig. 11B.

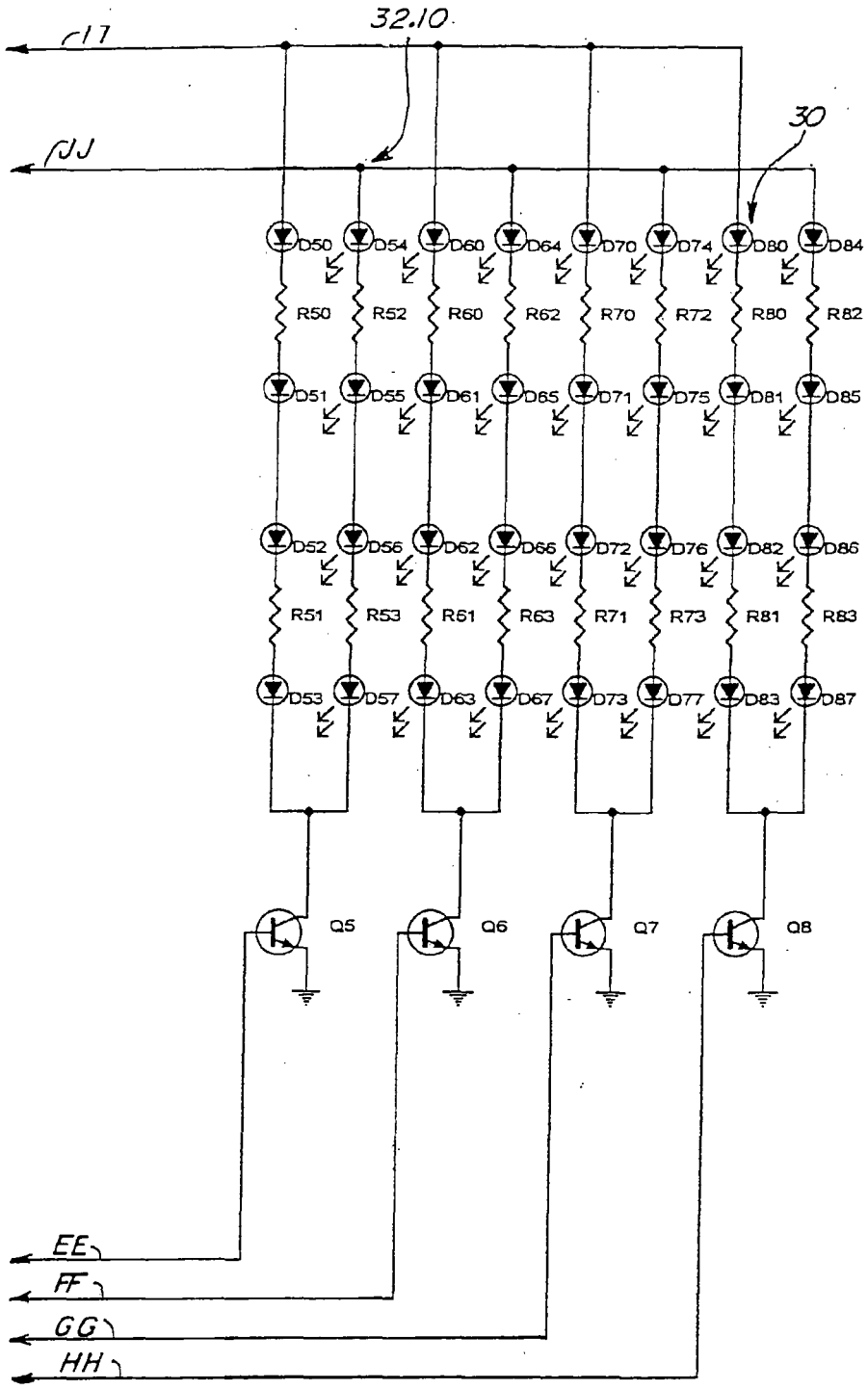
32.10
30
D50
D54
D60
D64
D70
D74
D80
D84
R50
R52
R60
R62
R70
R72
R80
R82
D51
D55
D61
D65
D71
D75
D81
D85
D52
D56
D62
D66
D72
D76
D82
D86
R51
R53
R61
R63
R71
R73
R81
R83
D53
D57
D63
D67
D73
D77
D83
D87
Q5
Q6
Q7
Q8
EE
FF
GG
HH

Fig. 11G.

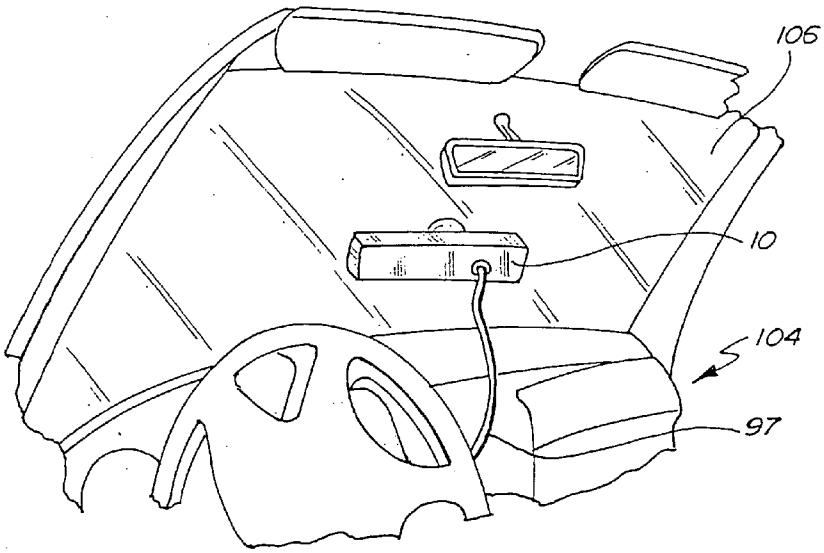

Fig. 13.

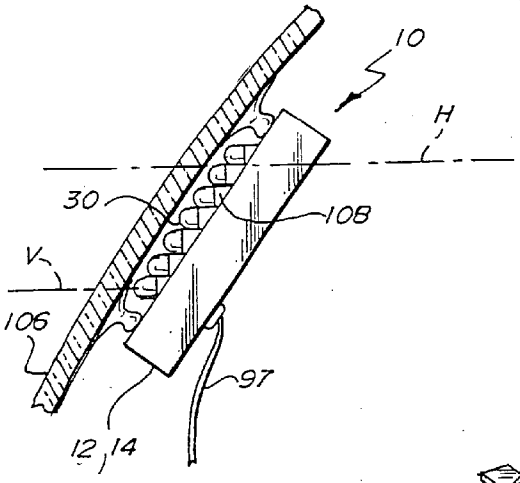

Fig. 14.

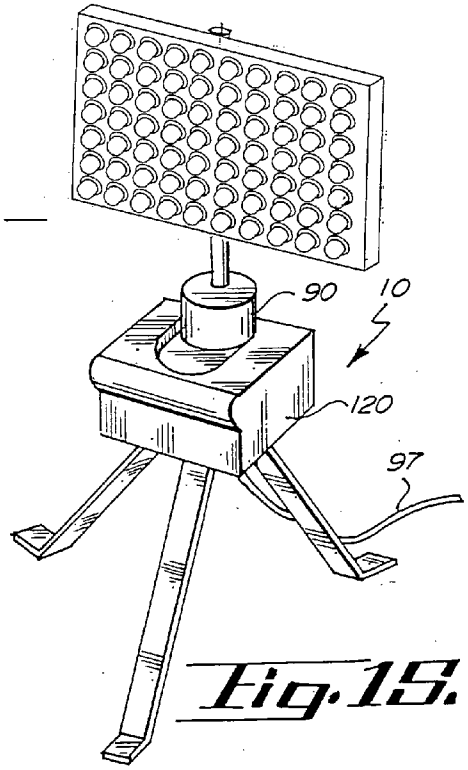

Fig. 15.

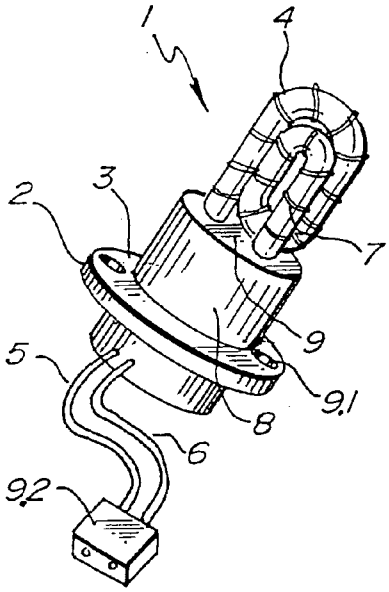

Fig. 16.
PRIOR ART

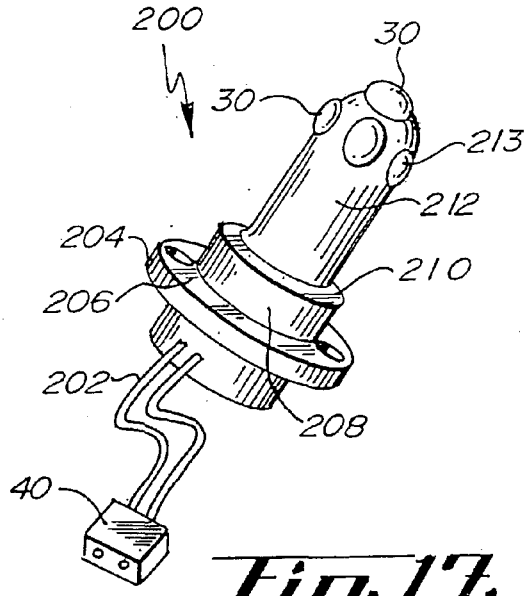

Fig. 17.

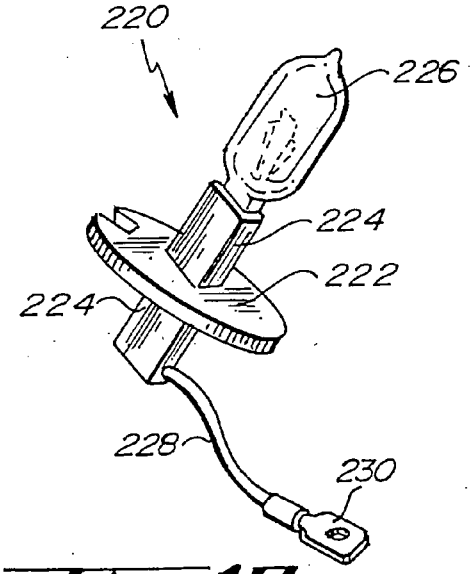

Fig. 18.
PRIOR ART

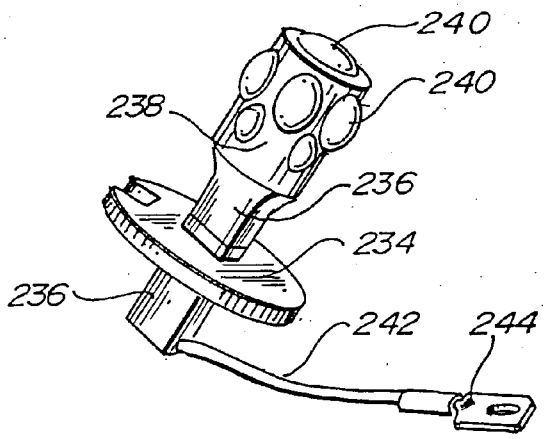

Fig. 19.

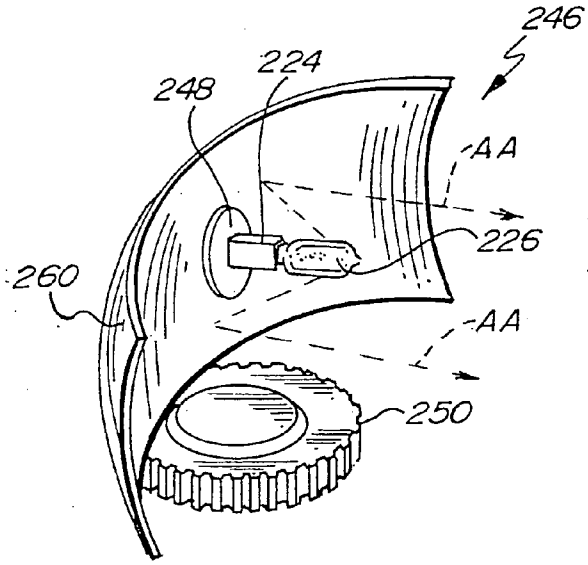

Fig. 20.
PRIOR ART

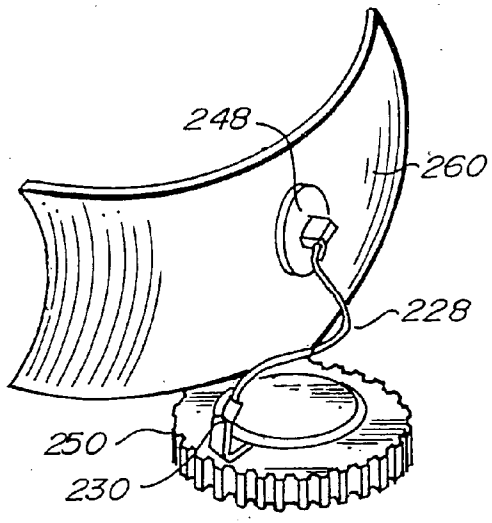

Fig. 21.

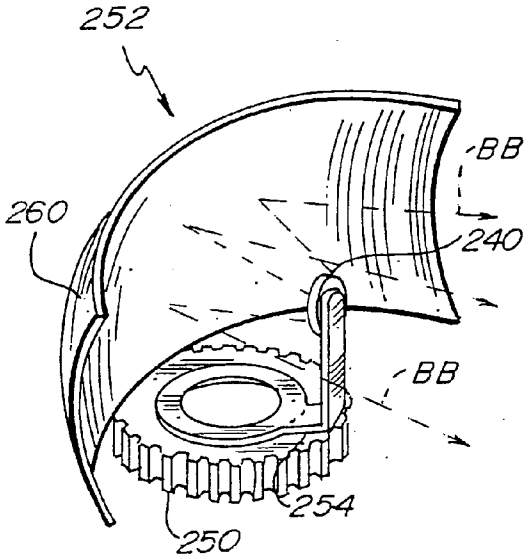

Fig. 22.

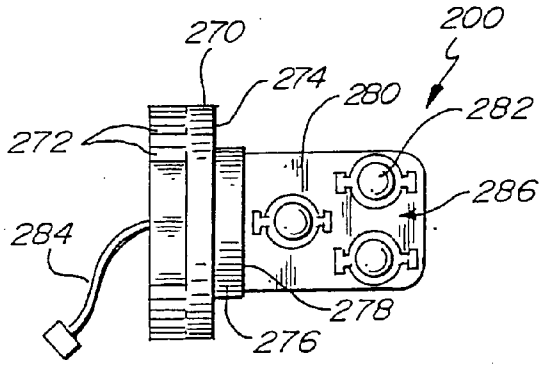

Fig. 23.

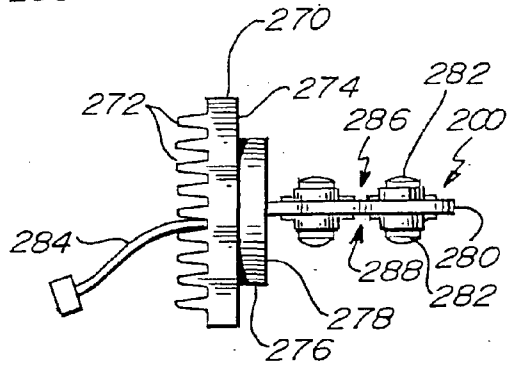

Fig. 24.

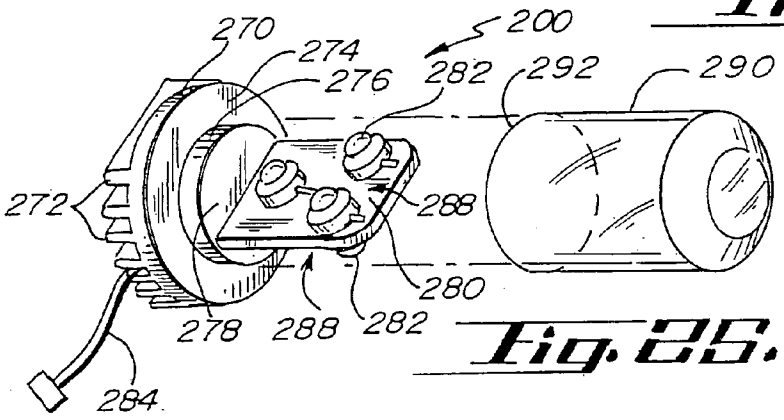

Fig. 25.

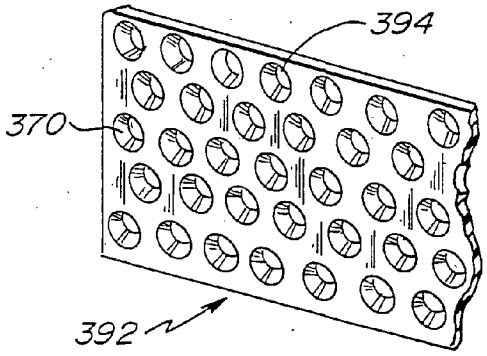

Fig. 26.

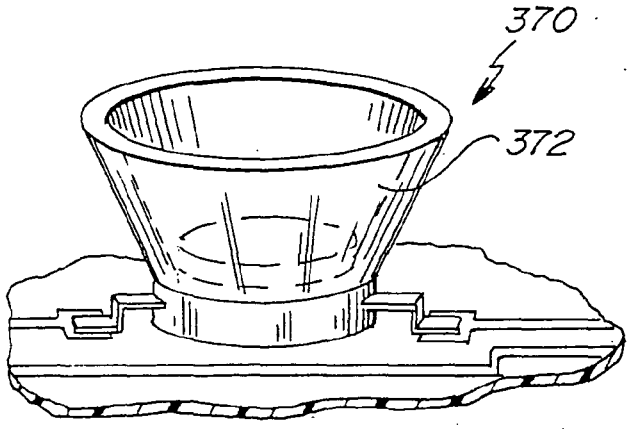

Fig. 27.

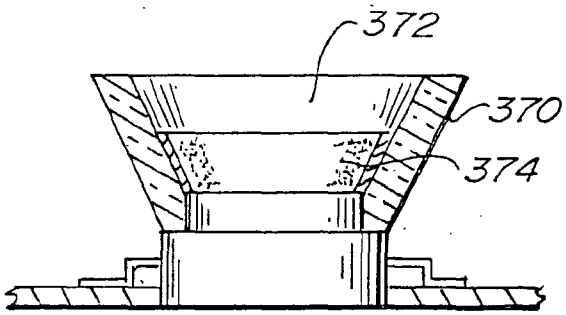

Fig. 28.

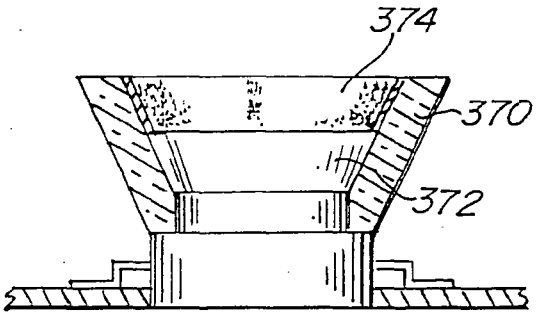

Fig. 29.

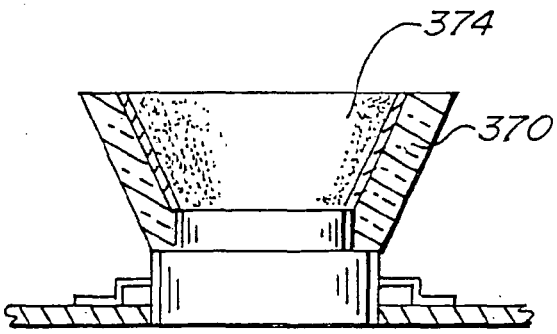

Fig. 30.

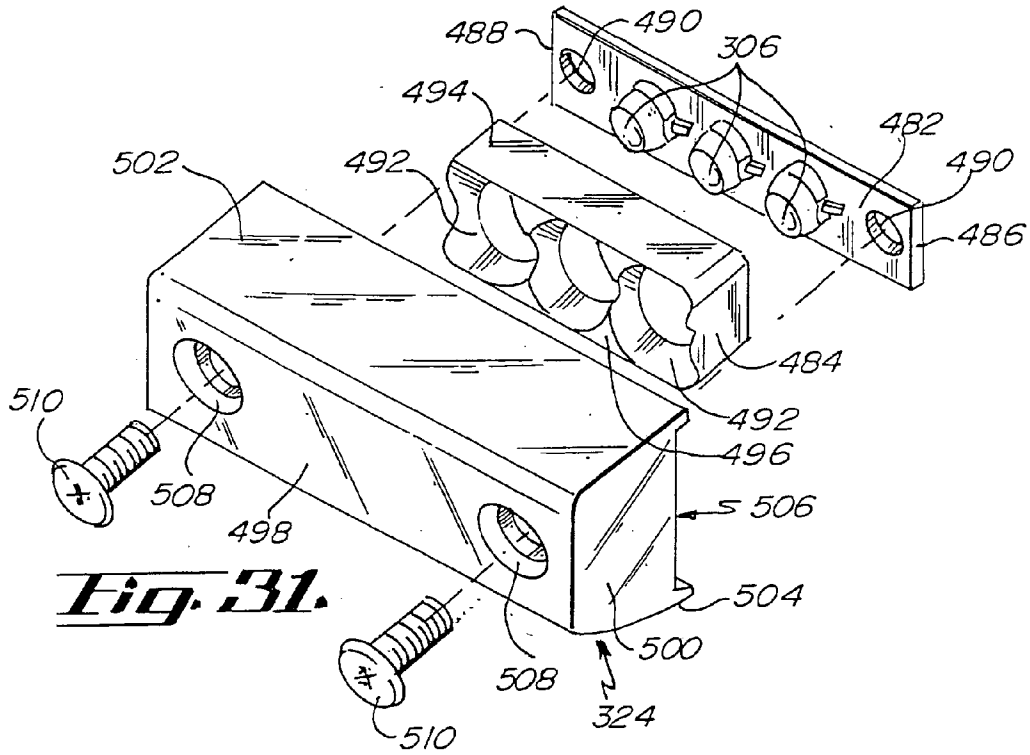
488
490
306
494
482
490
502
492
486
484
510
492
496
508
506
498
504
500
508
324
510

Fig. 31.

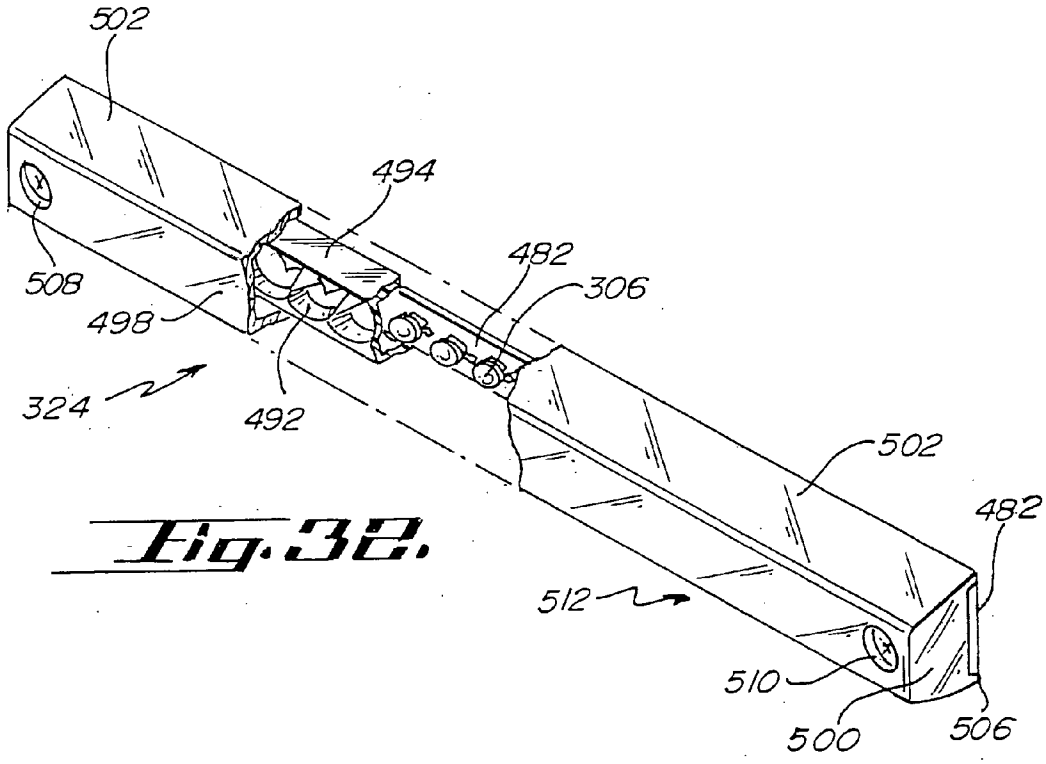
502
494
508
482
306
498
324
492
502
482
512
510
500
506

Fig. 32.

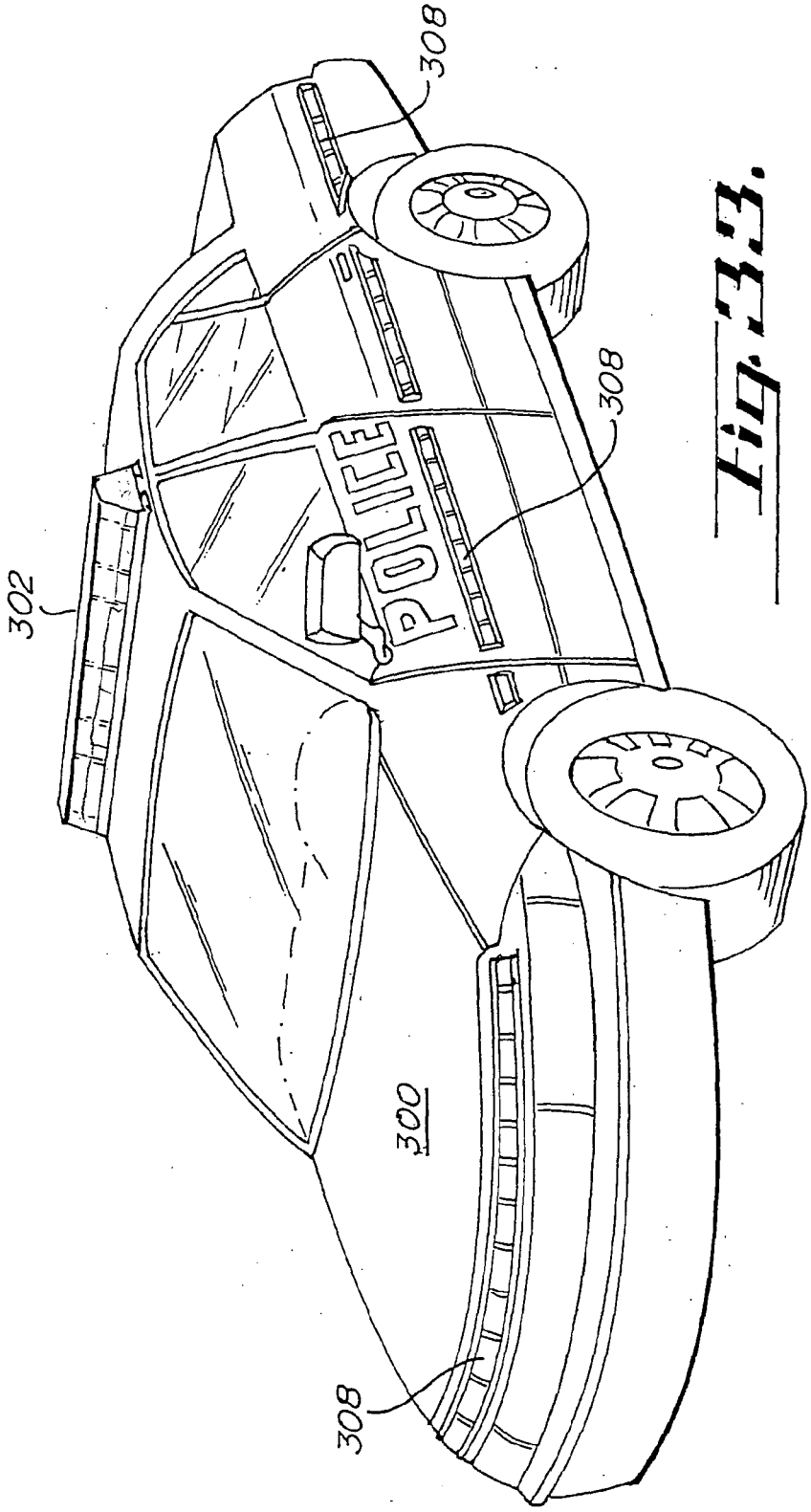

Fig. 33.

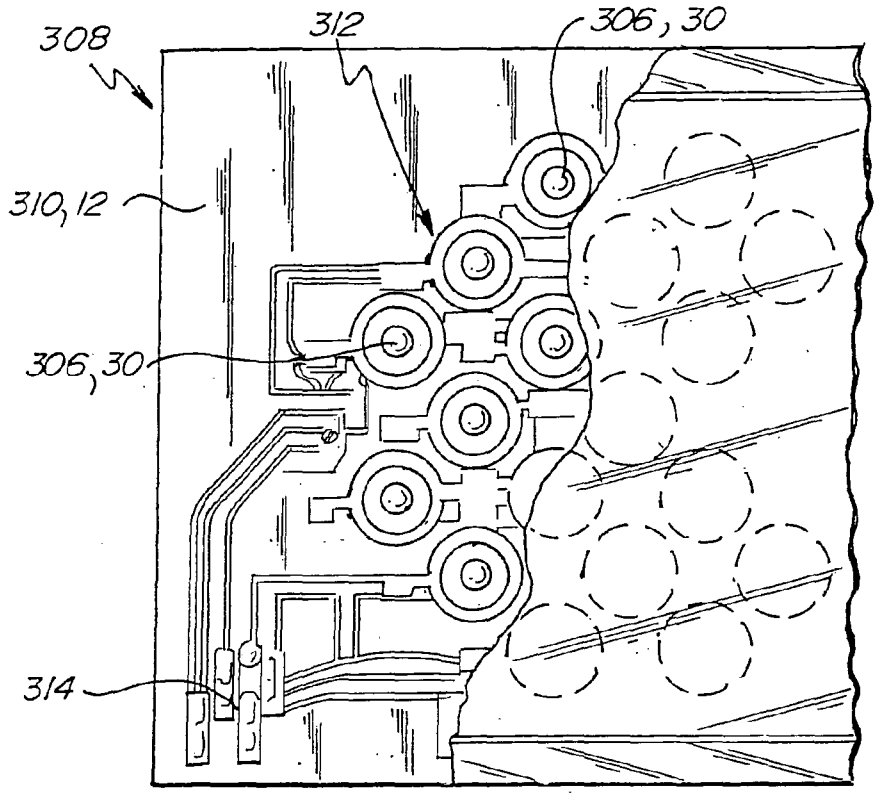
308
312
306, 30
310, 12
306, 30
314

Fig 34.

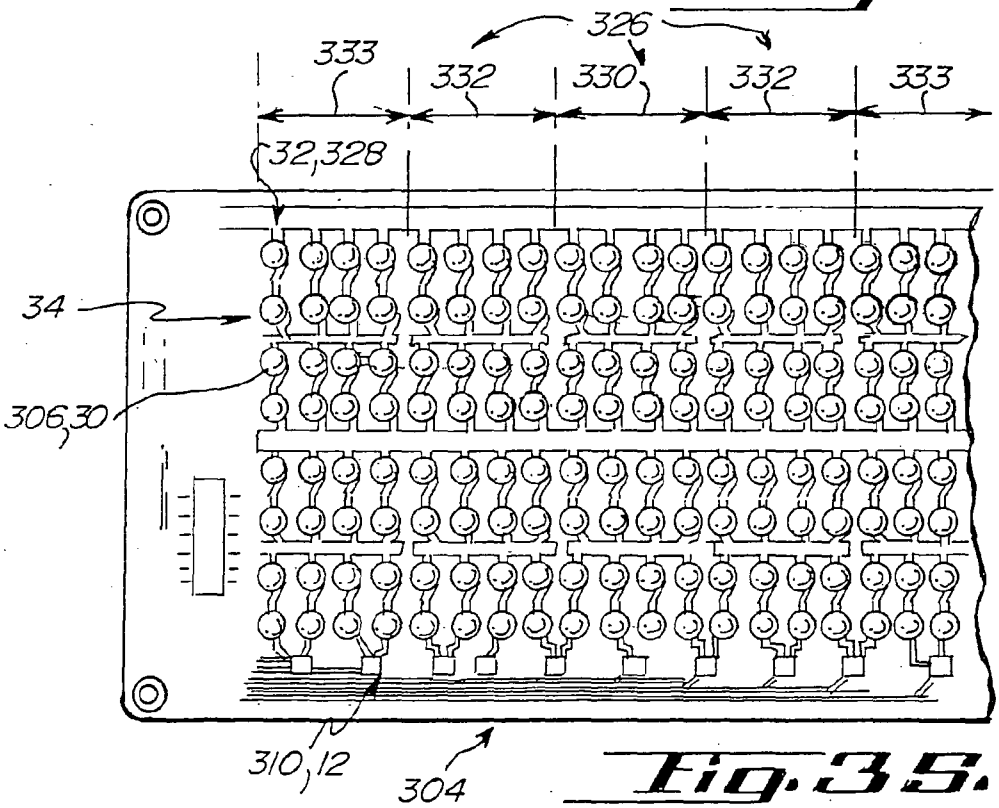
326
333
332
330
332
333
32,328
34
306,30
310,12
304

Fig. 35.

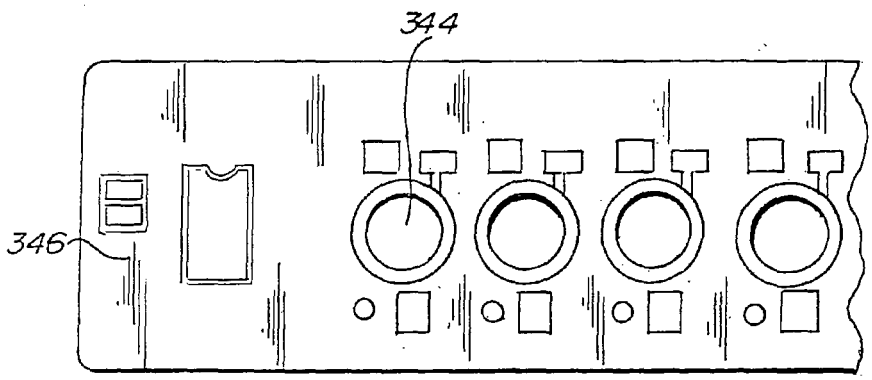

Fig. 36.

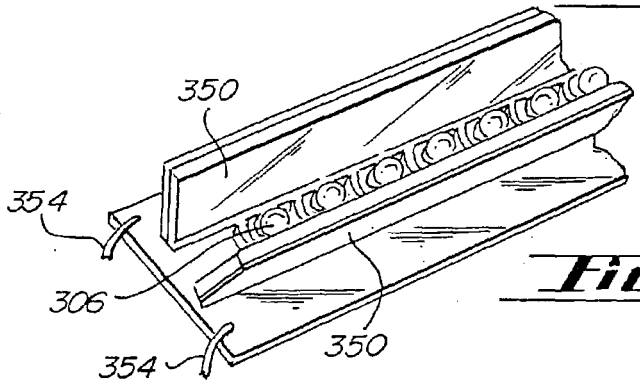

Fig. 37.

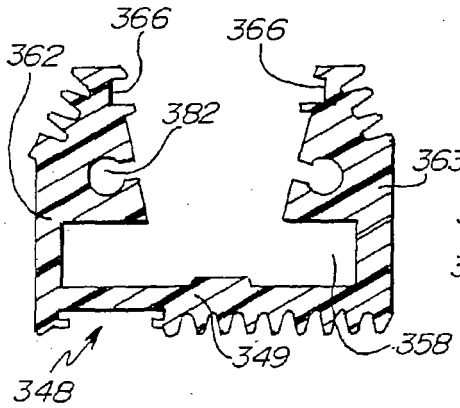

Fig. 38.

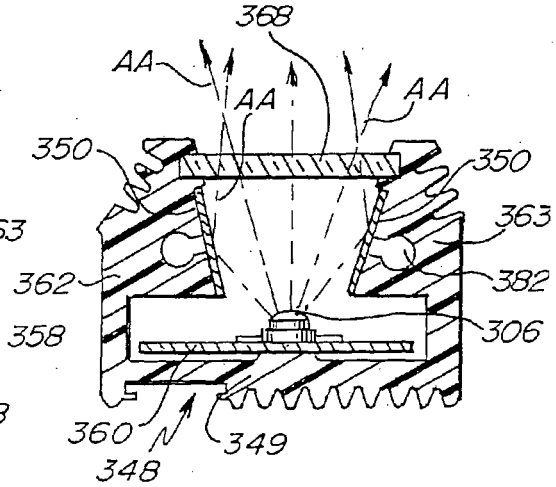

Fig. 39.

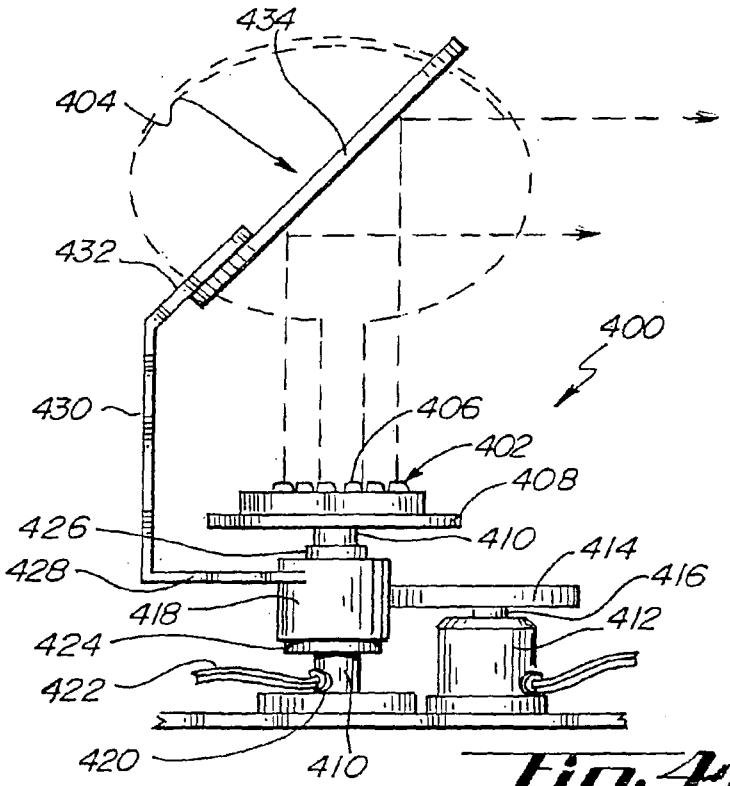
434
404
432
400
430
406
402
408
426
410
414
428
416
418
412
424
422
420
410

Fig. 40.

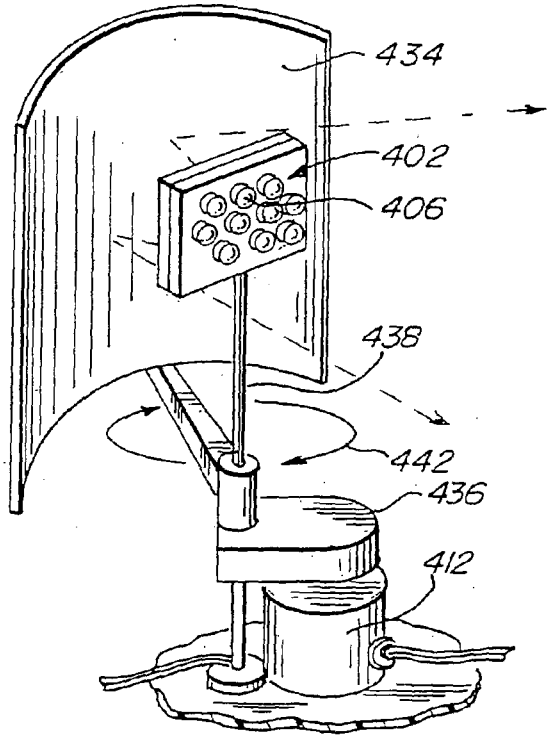
434
402
406
438
442
436
412

Fig. 41.

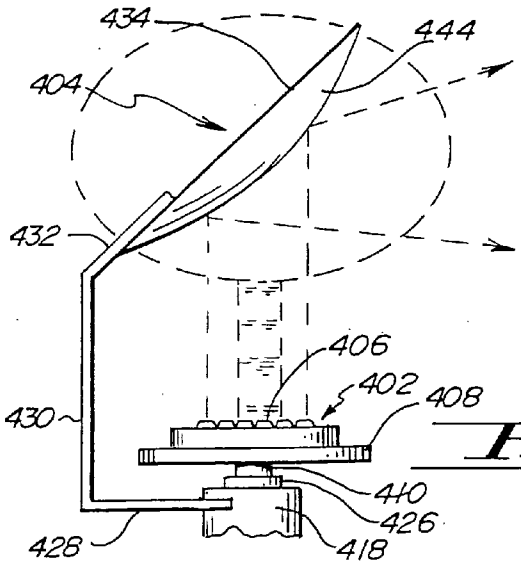

Fig. 42.

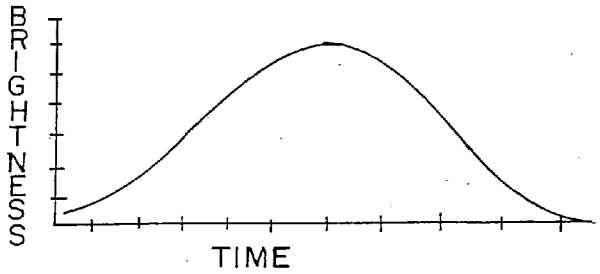

Fig. 43.

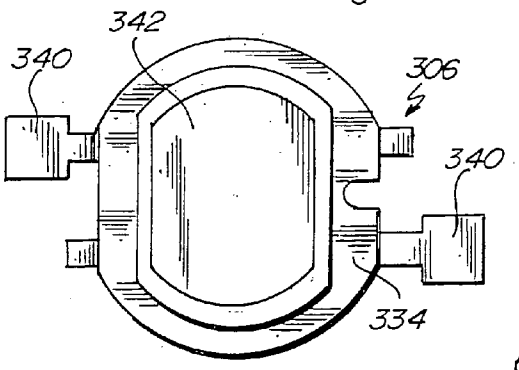

Fig. 48.

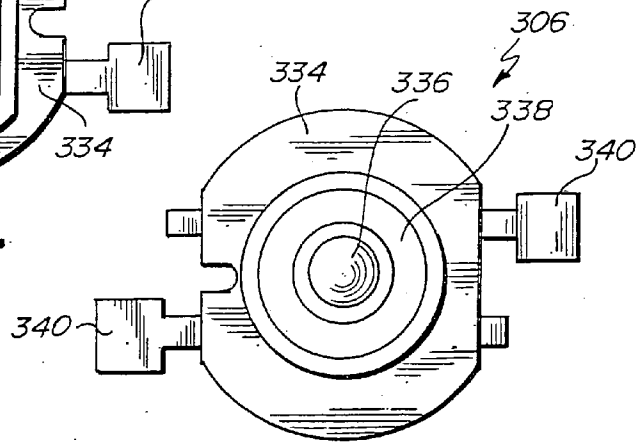

Fig. 49.

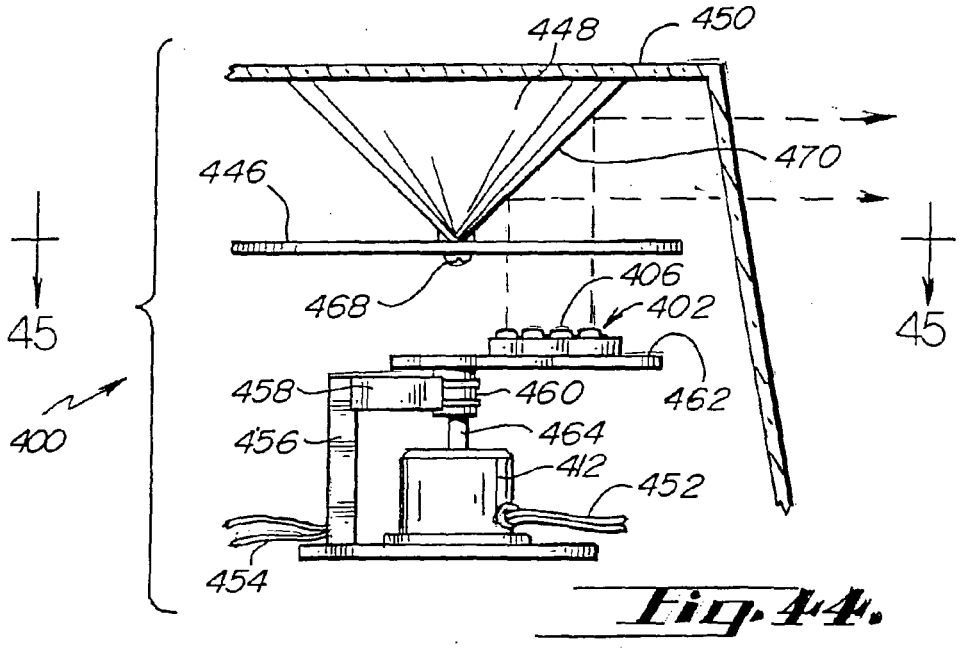

Fig. 44.

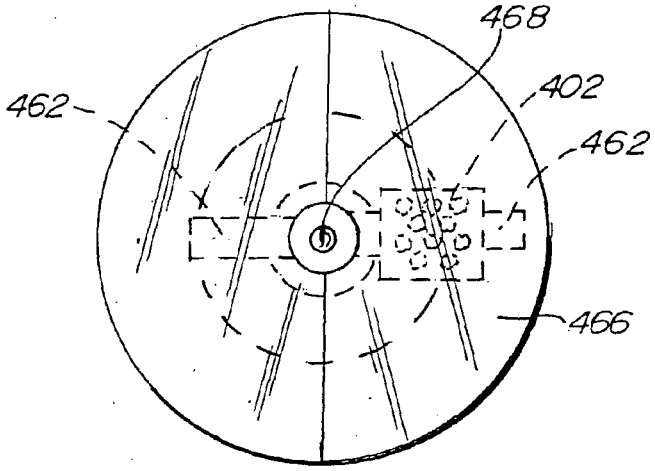

Fig. 45.

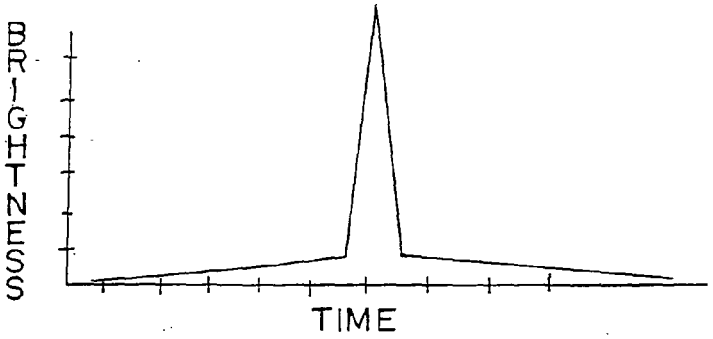

Fig. 46.

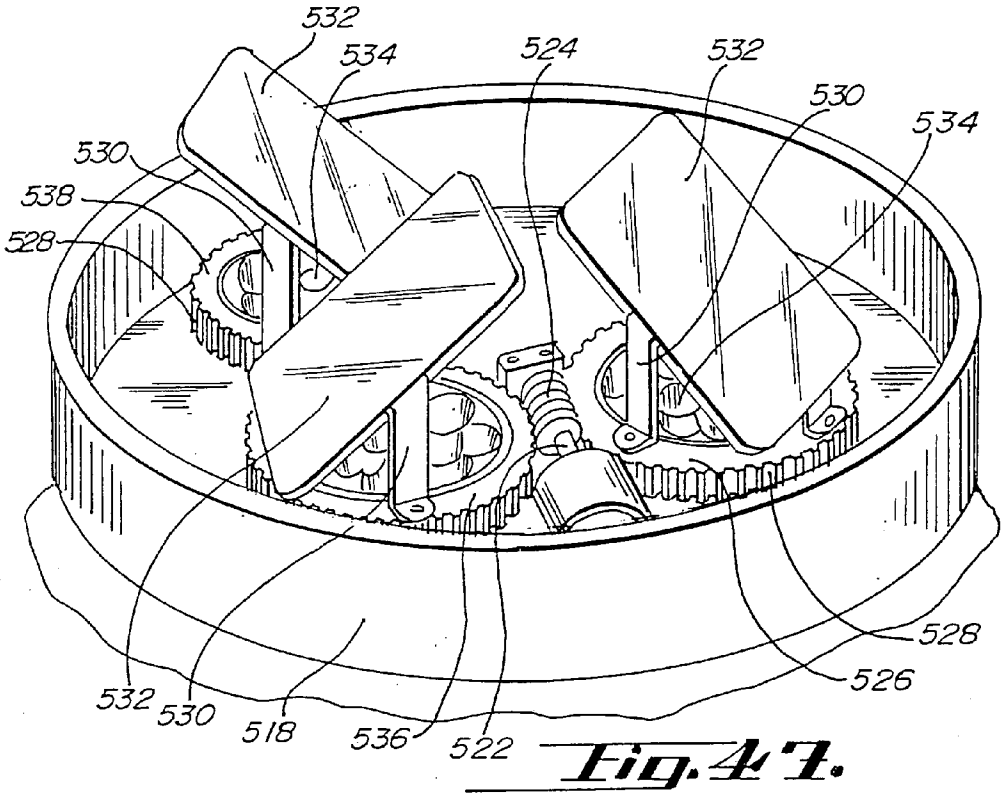
532
534
524
532
530
534
530
538
528
528
526
532
530
518
536
522

Fig. 47.

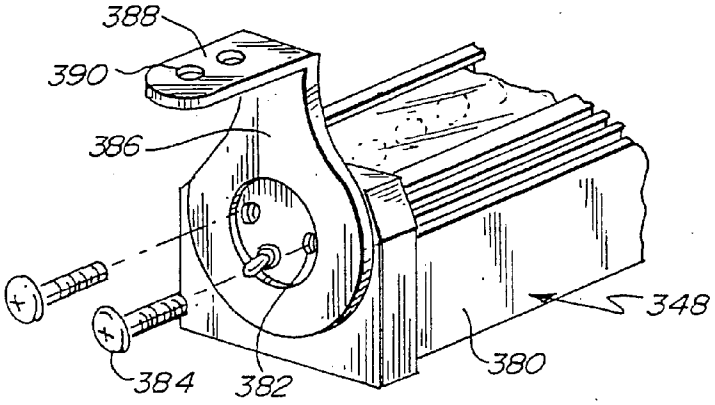
388
390
386
348
384
382
380

Fig. 50.

LED WARNING SIGNAL LIGHT AND MOVEABLE ROW OF LED'S

[0001] The present invention relates to a light emitting diode (LED) warning signal light having modulated power intensity for use by emergency vehicles and is based upon Provisional U.S. Patent Application No. 60/138,408, filed Jun. 8, 1999, which is incorporated herein by reference in its entirety.

BACKGROUND OF THE INVENTION

[0002] Light bars or emergency lights of the type used on emergency vehicles such as fire trucks, police cars, and ambulances, utilize warning signal lights to produce a variety of light signals. These light signals involve the use of various colors and patterns. Generally, these warning signal lights consist of incandescent and halogen light sources having reflective back support members and colored filters.

[0003] Many problems exist with the known methods for producing warning light signals. One particular problem with known light sources is their reliance on mechanical components to revolve or oscillate the lamps to produce the desired light signal. Additionally, these components increase the size of the light bar or emergency lights which may adversely affect the vehicles aerodynamic characteristics. Moreover, there is an increased likelihood that a breakdown of the light bar or light source will occur requiring the repair or replacement of the defective component. Finally, the known light bars and sources require a relatively large amount of electrical current during operation. The demands upon the electrical power system for a vehicle may therefore exceed available electrical resources reducing optimization of performance.

[0004] The most common light sources being used in light bars or emergency lights include halogen lamps or gaseous discharge xenon lamps. These lamps emanate large amounts of heat which is difficult to dissipate from a sealed light enclosure or emergency light and which may damage the electronic circuitry contained therein. In addition, these lamps consume large amounts of current requiring a large power supply or large battery or electrical source which may be especially problematic for use with a vehicle. These lamps also generate substantial electromagnetic emissions which may interfere with radio communications for a vehicle. Finally, these lamps, which are not rugged, have relatively short life cycles necessitating frequent replacement.

[0005] Another problem with the known warning signal lights is the use of filters to produce a desired color. Filtering techniques produce more heat that must be dissipated. Moreover, changing the color of a light source requires the physical removal of the filter from the light source or emergency light and the insertion of a new filter. Furthermore, filters fade or flake over time rendering the filters unable to consistently produce a desired color for observation in an emergency situation.

[0006] These problems associated with traditional signaling lamps are exacerbated by the fact that creating multiple light signals requires multiple signaling lamps. Further, there is little flexibility in modifying the light signal created by a lamp. For example, changing a stationary lamp into one that rotates or oscillates would require a substantial modification to the light bar which may not be physically or economically possible.

[0007] The present invention generally relates to electrical lamps and to high brightness light-emitting diode or "LED" technology which operates to replace gaseous discharge or incandescent lamps as used as automotive warning signal light sources.

[0008] Illumination lamps for automobile turn signals, brake lights, back-up lights, and/or marker lights/headlights frequently have accompanying utility parabolic lens/reflector enclosures which have been used for utility warning signals or emergency vehicle traffic signaling.

[0009] These signaling devices as known are commonly referred to as "unmarked corner tubes," or "dome tubes. These signaling devices as known frequently utilize xenon gaseous discharge tubes or incandescent lamps as the illumination sources.

[0010] A problem with the prior art is the cost and failure rate of the known "unmarked corner tubes," or "dome lights." The failure rate of these devices frequently results in a significant amount of "down time" for a vehicle to effectuate replacement. Further, an officer is frequently unaware that a vehicle light is inoperative requiring replacement. This condition reduces the safety to an officer during the performance of his or her duties. In addition, the reduced life cycle and failure rate of the known illumination devices significantly increases operational costs associated with material replacement and labor. A need, therefore, exists to enhance the durability, and to reduce the failure rate, of illumination devices while simultaneously reducing the cost of a replacement illumination source.

[0011] In the past, the xenon gaseous discharge lamps have utilized a sealed compartment, usually a gas tube, which may have been filled with a particular gas known to have good illuminating characteristics. One such gas used for this purpose was xenon gas, which provides illumination when it becomes ionized by the appropriate voltage application. Xenon gas discharge lamps are used in the automotive industry to provide high intensity lighting and are used on emergency vehicles to provide a visible emergency signal light.

[0012] A xenon gas discharge lamp usually comprises a gas-filled tube which has an anode element at one end and a cathode element at the other end, with both ends of the tube sealed. The anode and cathode elements each have an electrical conductor attached, which passes through the sealed gas end of the lamp exterior. An ionizing trigger wire is typically wound in a helical manner about the exterior of the glass tube, and this wire is connected to a high voltage power source typically on the order of 10-12 kilowatts (kw). The anode and cathode connections are connected to a lower level voltage source which is sufficient to maintain illumination of the lamp once the interior gas has been ionized by the high voltage source. The gas remains ignited until the anode/cathode voltage is removed; and once the gas ionization is stopped, the lamp may be ignited again by reapplying the anode/cathode voltage and reapplying the high voltage to the trigger wire via a voltage pulse.

[0013] Xenon gas lamps are frequently made from glass tubes which are formed into semicircular loops to increase the relative light intensity from the lamp while maintaining a relatively small form factor. These lamps generate extremely high heat intensity, and therefore, require posi-

tioning of the lamps so as to not cause heat buildup in nearby components. The glass tube of a xenon lamp is usually mounted on a light-based pedestal which is sized to fit into an opening in the light fixture and to hold the heat generating tube surface in a light fixture compartment which is separated from other interior compartment surfaces or components. In a vehicle application, the light and base pedestal are typically sized to fit through an opening in the light fixture which is about 1 inch in diameter. The light fixture component may have a glass or plastic cover made from colored material so as to produce a colored lighting effect when the lamp is ignited. Xenon gas discharge lamps naturally produce white light, which may be modified to produce a colored light, of lesser intensity, by placing the xenon lamp in a fixture having a colored lens. The glass tube of the xenon lamp may also be painted or otherwise colored to produce a similar result, although the light illumination from the tube tends to dominate the coloring; and the light may actually have a colored tint appearance rather than a solid colored light. The color blue is particularly hard to produce in this manner.

[0014] Because a preferred use of xenon lamps is in connection with emergency vehicles, it is particularly important that the lamp be capable of producing intense coloring associated with emergency vehicles, i.e., red, blue, amber, green, and clear.

[0015] When xenon lamps are mounted in vehicles, some care must be taken to reduce the corroding effects of water and various chemicals, including road salt, which might contaminate the light fixture. Corrosive effects may destroy the trigger wire and the wire contacts leading to the anode and cathode. Corrosion is enhanced because of the high heat generating characteristics of the lamp which may heat the air inside the lamp fixture when the lamp is in use, and this heated air may condense when the lamp is off resulting in moisture buildup inside the fixture. The buildup of moisture may result in the shorting out of the electrical wires and degrade the performance of the emission wire, sometimes preventing proper ionization of the gas within the xenon gas discharge lamp.

[0016] Warning lights, due to the type of light source utilized, may be relatively large in size which in turn may have an adverse affect upon adjacent operational components. In addition, there is an increased likelihood for a breakdown of the light source requiring repair or replacement of components.

[0017] Another problem with the known warning signal lights is the use of rotational and/or oscillating mechanisms which are utilized to impart a rotational or oscillating movement to a light source for observation during emergency situations. These mechanical devices are frequently cumbersome and difficult to incorporate and couple onto various locations about a vehicle due to the size of the device. These mechanical devices also frequently require a relatively large power supply to engage and operate the device to impart rotational and/or oscillating movement for a light source. Power consumption of electrical components for an emergency vehicle is of primary consideration for vehicle operators.

[0018] Another problem with the known warning signal lights is the absence of flexibility for the provision of variable intensity for the light sources to increase the number of available distinct and independent visual light effects. In certain situations it may be desirable to provide a variable intensity for a light signal or a modulated intensity for a light signal to provide a unique light effect to facilitate observation by an individual. In addition, the provision of a variable or modulated intensity for a light signal may further enhance the ability to provide a unique desired light effect for observation by an individual.

[0019] No warning lights are known which are flexible and which utilize a variable light intensity to modify a standard lighting effect. The warning lights as known are generally limited to a flashing light signal. Alternatively, other warning signal lights may provide a sequential illumination of light sources. No warning or utility light signals are known which simultaneously provide for modulated and/or variable power intensity for a known type of light signal to create a unique and desirable type of lighting effect.

[0020] No warning signal lights are known which provide an irregular or random light intensity to a warning signal light to provide a desired lighting effect. Also, no warning light signals are known which provide a regular pattern of variable or modulated light intensity for a warning signal light to provide a desired type of lighting effect. Further, no warning light signals are known which combine a desired type of light effect with either irregular variable light intensity or regular modulated light intensity to provide a unique and desired combination lighting effect.

[0021] It has also not been known to provide alternative colored LED light sources which may be electrically controlled for the provision of any desired pattern of light signal such as flashing, pulsating, oscillating, modulating, rotational, alternating, strobe, and/or combination light effects. In this regard, a need exists to provide a spatially and electrically efficient LED light source for use on an emergency or utility vehicle which provides the appearance of rotation or other types of light signals without the necessity of a mechanical devices. In addition, a need exists to provide a spatially and electrically efficient LED light source for use on an emergency vehicle which provides a flashing, modulated, oscillating, rotational, alternating, and/or strobe light effects without the necessity of mechanical devices.

[0022] In view of the above, there is a need for a warning signal light that:

[0023] (1) Is capable of producing multiple light signals;

[0024] (2) Produces the appearance of a revolving or oscillating light signal without relying upon mechanical components;

[0025] (3) Generates little heat;

[0026] (4) Uses substantially less electrical current;

[0027] (5) Produces significantly reduced amounts of electromagnetic emissions;

[0028] (6) Is rugged and has a long life cycle;

[0029] (7) Produces a truer light output color without the use of filters;

[0030] (8) Is positionable at a variety of locations about an emergency vehicle; and

[0031] (9) Provides variable power intensity to the light source without adversely affecting the vehicle operator's ability to observe objects while seated within the interior of the vehicle.

[0032] Other problems associated with the known warning signal lights relate to the restricted positioning on a vehicle due to the size and shape of the light source. In the past, light sources due to the relatively large size of light bars or light sources, were required to be placed on the roof of a vehicle or at a location which did not interfere with, or obstruct, an operator's ability to visualize objects while seated in the interior of the vehicle. Light bars or light sources generally extended perpendicular to the longitudinal axis of a vehicle and were therefore more difficult to observe from the sides by an individual.

[0033] The ease of visualization of an emergency vehicle is a primary concern to emergency personnel regardless of the location of the observer. In the past, optimal observation of emergency lights has occurred when an individual was either directly in front of, or behind, an emergency vehicle. Observation from the sides, or at an acute angle relative to the sides, frequently resulted in reduced observation of emergency lights during an emergency situation. A need therefore exists to improve the observation of emergency lights for a vehicle regardless of the location of the observer. A need also exists to improve the flexibility of placement of emergency lights upon a vehicle for observation by individuals during emergency situations.

[0034] In the past, flashing light signals emanating from light bars have been used to signal the presence of an emergency situation necessitating caution. A need exists to reduce the size of light sources on an emergency vehicle and to improve the efficiency of the light sources particularly with respect to current draw and reduced aerodynamic drag. A need also exists to enhance the flexibility of positioning of light sources about a vehicle for observation by individuals. In order to satisfy these and other needs, more spatially efficient light sources such as LED's are required. It is also necessary to provide alternative colored LED light sources which may be electrically controlled for the provision of any desired pattern of light signal such as flashing, alternating, pulsating, oscillating, modulating, rotational, and/or strobe light effects without the necessity of spatially inefficient and bulky mechanical devices. In that regard, a need exists to provide a spatially and electrically efficient LED light source for use on an emergency vehicle which provides any of the above-identified types of warning light signals without the necessity of mechanical devices. In addition, a need exists to provide a spatially and electrically efficient LED light source for use on an emergency vehicle which provides a flashing, alternating, pulsating, rotating, modulated, oscillating, and/or strobe light effect or combinations thereof without the necessity of mechanical devices.

GENERAL DESCRIPTION OF THE INVENTION

[0035] According to the invention, there is provided a light emitting diode (LED) warning signal light which may be depicted in several embodiments. In general, the warning signal light may be formed of a single row or an array of light emitting diode light sources configured on a light support and in electrical communication with a controller and a power supply, battery, or other electrical source. The warning signal light may provide various light signals, colored light signals, or combination light signals for use by a vehicle. These light signals may include a strobe light, a pulsating light, a revolving light, a flashing light, a modulated or variable intensity light, an oscillating light, an alternating light, and/or any combination thereof. Additionally, the warning signal light may be capable of displaying symbols, characters, or arrows. Rotating and oscillating light signals may be produced by sequentially illuminating columns of LED's on a stationary light support in combination with the provision of variable power intensity from the controller. However, the warning signal light may also be rotated or oscillated via mechanical means. The warning signal light may also be transportable for easy connection to a stand such as a tripod for electrical connection to a power supply, battery, or other electrical source as a remote standalone signaling device.

[0036] For the replacement LED lamp, extending from the standard mounting base may be a light source which one or a plurality of LED lamp modules which may be formed of the same or different colors as desired by an individual. Additionally, rotating and oscillating light signals may be produced by substitution of an LED light source in an oscillating or reflective light assembly. In addition, the warning signal light and/or replacement warning signal light may be electrically coupled to a controller used to modulate the power intensity for the light sources to provide for various patterns of illumination to create an illusion of rotation or other type of illusion for the warning signal light without the use of mechanical devices.

[0037] Alternative colored LED light sources may also be electrically controlled for the provision of any desired pattern of warning light signals such as flashing, pulsating, oscillating, modulating, rotational, alternating, and/or strobe light effects without the necessity of spatially inefficient and bulky mechanical devices.

[0038] Alternatively, a reflective light assembly may be provided. The reflective light assembly may rotate about a stationary light source or the light source may rotate about a stationary reflector. In another alternative embodiment, the reflective assembly may be positioned at an acute angle approximately 45° above a stationary LED panel or a solitary light source where the reflector may be rotated about a pivot point and axis to create the appearance of rotation for the light source. The light source may be utilized in conjunction with the reflective assembly and may also be electrically coupled to a controller for the provision of pulsating, oscillating, alternating, flashing, stroboscopic, revolving, variable, and/or modulated light intensity for observation by an individual.

[0039] The controller is preferably in electrical communication with the power supply and the LED's to modulate the power intensity for the LED light sources for provision of a desired type of warning light effect.

[0040] The warning signal light may be formed of an array of LED's, a single row of LED's or a solitary LED mounted upon and in electrical communication with a substantially flat light support which includes a circuit board or LED mounting surface coupled to a power source. The light support may have dimensions of three inches by three inches or smaller at the discretion of an individual. Each light support may include an adhesive, magnetic, and/or other

affixation mechanism to facilitate attachment at various locations on and/or around an emergency vehicle. Each individual light support may be positioned adjacent to and be in electrical communication with another light support through the use of suitable electrical connections. A plurality of light supports or solitary light sources may be electrically coupled in either a parallel or series manner to the controller at the discretion of an individual. A plurality of light sources each containing an array or singular LED may be in electrical communication with a power supply and a controller to selectively illuminate the LED's to provide for the appearance of a revolving, modulating, strobe, oscillating, alternating, pulsating, and/or flashing light source or any combinations thereof. The controller is preferably in electrical communication with the power supply and the LED's to modulate the power intensity for the LED light sources for variable illumination of the LED light sources. The warning signal lights may encircle an emergency vehicle at the discretion of an individual. In addition, the light support may be encased within a waterproof enclosure to prevent moisture contamination and shorting of the LED light sources.

[0041] A principal advantage of the present invention is to provide a warning signal light capable of simulating revolving or oscillating light signals without the use of mechanical components.

[0042] Another principal advantage of the present invention is that the warning signal light is capable of producing several different types of light signals or combinations of light signals.

[0043] Still another principal advantage of the present invention is to be rugged and have a relatively longer life cycle than traditional warning signal lights.

[0044] Still another principal advantage of the present invention is to produce a truer or pure light output color without the use of filters.

[0045] Still another principal advantage of the present invention is to allow the user to adjust the color of the light signal without having to make a physical adjustment from a multi-colored panel.

[0046] Still another principal advantage of the present invention is that it may be formed into various shapes. This allows the invention to be customized for the particular need.

[0047] Still another advantage of the present invention is that the light signal produced may be easily customized by the user via a controller or microprocessor.

[0048] Still another principal advantage of the present invention is the provision of an LED light source which is formed of a relatively simple and inexpensive design, construction, and operation and which fulfills the intended purpose without fear of failure or injury to persons and/or damage to property.

[0049] Still another principal advantage of the present invention is the provision of an LED light source which is flexible and which may easily replace existing illumination devices used as turn signals, brake lights, back-up lights, marker lights, and headlights in utility lens/reflector enclosures.

[0050] Still another principal of the present invention is the provision of an LED light source for creation of bright bursts of intense white or colored light to enhance the visibility and safety of a vehicle in an emergency signaling situation.

[0051] Still another principal advantage of the present invention is the provision of an LED light source which is flexible and may easily replace existing illumination devices at a much more economic expense and further having a reduced failure rate.

[0052] Still another principal advantage of the present invention is the provision of an LED light source which produces brilliant lighting in any of the colors associated with an emergency vehicle light signal such as red, blue, amber, green, and/or white.

[0053] Still another principal advantage of the present invention is the provision of an LED light source which is highly resistant to corrosive effects-and which is impervious to moisture build-up.

[0054] Still another principal advantage of the present invention is the provision of an LED light source which has an extended life cycle and continues to operate at maximum efficiency throughout its life cycle.

[0055] Still another principal advantage of the present invention is the provision of an LED light source which draws less current and/or has a reduced power requirement from a power source for a vehicle.

[0056] Still another principal advantage of the present invention is the provision of an LED light source having improved reliability as compared to xenon gaseous discharge lamps, halogen lamps, and/or incandescent lamps as currently used on emergency vehicles.

[0057] Still another principal advantage of the present invention is the provision of an LED light source which is simple and may facilitate the ease of installation and replacement of a xenon, halogen, and/or incandescent light source from a motor vehicle.

[0058] Still another principal advantage of the present invention is the provision f an LED light source which reduces RF emissions which may interfere with other radio and electronic equipment in an emergency vehicle.

[0059] Still another principal advantage of the present invention is the provision of an LED light source which functions under cooler operating temperatures and conditions thereby minimizing the exposure of heat to adjacent component parts which, in turn, reduces damage caused by excessive heat.

[0060] Still another principal advantage of the present invention is the provision of an LED light source having simplified electronic circuitry for operation as compared to xenon gaseous discharge lamps, halogen lamps, and/or incandescent lamps as used with an emergency vehicle.

[0061] Still another principal advantage of the present invention is the provision of a warning signal light which may be easily visualized during emergency situations thereby enhancing the safety of emergency personnel.

[0062] Still another principal advantage of the present invention is the provision of a warning signal light which includes LED technology and which is operated by a controller to provide any desired type or color of light signal

including but not limited to rotational, pulsating, oscillating, strobe, flashing, alternating, and/or modulated light signals without the necessity for mechanical devices.

[0063] Still another principal advantage of the present invention is the provision of a warning signal light which is capable of simultaneously producing several different types of light signals.

[0064] Still another principal advantage of the present invention is the provision of a warning signal light which includes light emitting diode technology which is flexible and which may be attached to any desired location about the exterior of an emergency vehicle.

[0065] Still another principal advantage of the present invention is the provision of an emergency warning signal light for emergency vehicles which has improved visualization, aerodynamic efficiency, and increased electrical efficiency.

[0066] Still another principal advantage of the present invention is the provision of an LED light source which is flexible and which may be connected to a modulated power source to provide variable power intensity for the light source which in turn is used to create the appearance of rotation and/or oscillation without the use of mechanical rotation or oscillating devices.

[0067] A feature of the invention is the provision of a plurality of light emitting diodes (LED's), integral to a circuit board or LED mounting surface, where the LED's may be aligned in a single row or in vertical columns and horizontal rows.

[0068] Another feature of the invention is the mounting of a panel of LED's to a mechanical device which rotates or oscillates the panel during use as a warning signal light on an emergency vehicle.

[0069] Yet another feature of the invention is the provision of a plurality of LED's mounted to a flexible circuit board which may be manipulated into any desired configuration and which may be used to produce rotating, oscillating, pulsating, flashing, alternating, and/or modulated warning signal light for an emergency vehicle.

[0070] Yet another feature of the invention is the provision of an LED support member supporting an array of colored LED's and a controller capable of selectively illuminating the LED's of the same color to produce a single or mixed colored light signal.

[0071] Still another feature of the invention is the provision of a light emitting diode support member having an array of LED's disposed about at least two sides and a controller capable of producing light signals on each side which are independent of each other.

[0072] Still another feature of the invention is the provision of an LED support member having an array of LED's angularly offset with respect to the LED support member for the provision of a horizontal light signal as viewed by an individual when the LED support member is mounted within the interior of the forward or rear windshield of a vehicle.

[0073] Still another feature of the invention is the provision of an LED support member which may be easily connectable and/or removed from a transportable support such as a tripod for placement of an LED warning signal light at any location as desired by an individual.

[0074] Still another feature of the invention is the provision of an LED support member which may be easily connectable to an emergency vehicle, including but not limited to automobiles, ambulances, trucks, motorcycles, snowmobiles, and/or any other type of vehicle in which warning signal or emergency lights are utilized.

[0075] Still another feature of the present invention is the provision a base having one or more LED's mounted thereon where said base is adapted for insertion into a standard one inch opening presently used for receiving xenon strobe tubes as a replacement LED warning light signaling light source.

[0076] Still another feature of the present invention is the provision a base having one or more LED's mounted thereon which is adapted for insertion into a mechanical device which rotates or oscillates a light source during use as a warning signal light on an emergency vehicle.

[0077] Still another feature of the present invention is the provision a microprocessor/controller which is in electrical communication with the LED light sources to selectively activate individual LED's to produce a flashing, strobe, alternating, rotating, oscillating, modulated and/or pulsating warning light signals.

[0078] Still another feature of the present invention is the provision an LED light signal which may be easily electrically coupled to a controller.

[0079] Still another feature of the present invention is the provision a warning signal light having a plurality of strip LED light sources affixed to the exterior of an emergency vehicle where the strip LED light sources are in electrical communication with a controller.

[0080] Still another feature of the present invention is the provision a warning signal light having a controller in electrical communication with a plurality of strip LED light sources for the provision of modulated power intensity utilized to create the appearance of a rotational, pulsating, oscillating flashing strobe alternating, or modulated warning light signal.

[0081] Still another feature of the present invention is the provision an LED light source where the power may be modulated by the controller to produce variable power intensity for the light sources to produce various desired patterns of illumination.

[0082] Still another feature of the present invention is the provision of a warning signal light having LED technology which includes an array, a single row or a solitary LED light source mounted to a light support.

[0083] Still another feature of the present invention is the provision of a strip warning signal light having LED technology which includes a light support having one or more LED light sources where the light support has a size dimension approximating three inches by three inches or smaller.

[0084] Still another feature of the present invention is the provision of a strip warning signal light having LED technology where a plurality of strip LED light supports may be affixed in surrounding engagement to the exterior of an emergency vehicle.

[0085] Still another feature of the present invention is the provision of a strip warning signal light having LED technology where a light support is enclosed within a transparent and water resilient enclosure to prevent water penetration and/or other contamination.

[0086] Still another feature of the present invention is the provision of a warning signal light having a plurality of light supports affixed to the exterior of an emergency vehicle where the controller is in electrical communication with each of the light supports.

[0087] Still another feature of the present invention is the provision of a warning signal light having a controller in electrical communication with a plurality of light supports or single light sources for the provision of a modulated power intensity to the light sources.

[0088] Still another feature of the present invention is the provision of an LED light source where the power may be modulated by the controller to produce variable power intensity for the light source to provide various desired patterns or combinations of patterns of illumination.

[0089] Still another feature of the present invention is the provision of an LED light source which includes a reflective device which rotates about the LED light source to provide a warning light signal.

[0090] Still another feature of the present invention is the provision of an LED light source which includes a reflective device which is flat, concave, convex and/or parabolic for reflection of the light emitted for the LED light source.

[0091] Still another feature of the present invention is the provision of an LED light source which includes a reflector mounted at an acute angel of approximately 45 degrees relative to the LED light source for reflection of light in a direction as desired by an individual.

[0092] Still another feature of the present invention is the provision of an LED light source which includes a reflector mounted at an acute angle of approximately 45 degrees relative to the LED light source where the reflector may be rotated about the LED light source for reflection of light in a direction as desired by an individual.

[0093] Still another feature of the present invention is the provision of an LED light source where a single LED light source or an array of LED light sources may be rotated and simultaneously a reflective device may be rotated to provide a warning signal light.

[0094] Still another feature of the present invention is the provision of an LED light source which may include a conical shaped reflector or cullminator positioned above a light source.

[0095] Still another feature of the present invention is the provision of a rotatable or stationary filter mounted between an LED light source and a reflector.

[0096] Still another feature of the present invention is the provision of a rotatable or stationary reflector which may include transparent and/or reflective sections.

[0097] Still another feature of the present invention is the provision of an LED light source where the individual LED light sources or arrays of LED light sources may be rotated for transmission of light through the transparent and/or opaque sections of a filter for the provision of a unique warning signal light effect.

[0098] Still another feature of the present invention is the provision of a conical reflector which may include concave and/or convex reflective surfaces to assist in the reflection of light emitted from an LED light source.

[0099] Still another feature of the present invention is the provision of an LED light support having a longitudinal dimension and a single row of LED's which provide a desired type of warning light signal.

[0100] Still another feature of the present invention is the provision of an LED light support having a frame adapted to hold a circuit board or LED mounting surface.

[0101] Still another feature of the present invention is the provision of an LED light support where the circuit board or LED mounting surface includes one or more heat sink wells where an individual LED is positioned within each of the heat sink wells.

[0102] Still another feature of the present invention is the provision of an LED light support having one or more reflectors or elongate mirrors disposed in the frame to reflect light emitted from the LED light sources is a desired direction.

[0103] Still another feature of the present invention is the provision of an LED light support having a cullminator reflector which may be formed of one or more conical reflector cups which are utilized to reflect light emitted from the light sources in a direction desired by an individual.

[0104] Still another feature of the present invention is the provision of an LED light support having a lens cover attached to the frame to minimize water penetration or contamination exposure into the interior of the frame.

[0105] Still another feature of the present invention is the provision of an LED light support having a positioning support functioning as a cullminator reflector which additionally positions individual LED's at a desired location relative to the interior of the frame.

[0106] Still another feature of the present invention is the provision of an LED light support having a switch which may be manipulated to terminate power from a power supply or terminate communication to a controller.

[0107] Still another feature of the present invention is the provision of an LED light support having an affixation mechanism which may be integral or attached to the frame where the affixation mechanism is adapted to enable the light support to be secured to a vehicle at a desired location.

BRIEF DESCRIPTION OF THE DRAWINGS

[0108] **FIG. 1** is a partial perspective view of an emergency vehicle equipped with a light bar containing warning signal lights according to an embodiment of the invention;

[0109] **FIG. 2** is a partial front elevation view of an emergency vehicle equipped with a light bar containing warning signal lights referring to an embodiment of the invention;

[0110] **FIG. 3** is a perspective view of a warning signal light attached to a gyrator according to an embodiment of the invention;

[0111] **FIG. 4** is a perspective view of a warning signal light according to an embodiment of the invention depicting the sequential activation of columns of light-emitting diodes (LED's).

[0112] **FIG. 5** is a perspective view of a warning signal light according to an embodiment of the invention depicting sequential activation of rows of LED's;

[0113] **FIG. 6** is a perspective view of a warning light signal according to an embodiment of the invention;

[0114] **FIG. 7** is a perspective view of a warning light signal according to an embodiment of the invention;

[0115] **FIG. 8** is a perspective view of a warning light signal according to an embodiment of the invention;

[0116] **FIG. 9** is a perspective view of a warning light signal according to an embodiment of the invention;

[0117] **FIG. 10** is a perspective view of a warning light signal according to an embodiment of the invention;

[0118] **FIGS. 11A, 11B**, and **11**C are schematic diagrams of the controller circuitry in accordance with an embodiment of the invention;

[0119] **FIG. 12** is a perspective view of a warning signal light according to an embodiment of the invention;

[0120] **FIG. 13** is a perspective detailed view of a warning signal light attached to the interior of a windshield of an emergency vehicle;

[0121] **FIG. 14** is a side plan view of a warning signal light mounted to an interior surface of an emergency vehicle window having auxiliary offset individual LED light sources;

[0122] **FIG. 15** is an environmental view of a warning signal light as engaged to a remote support device such as a tripod;

[0123] **FIG. 16** is a detailed isometric view of a xenon strobe tube and standard mounting base;

[0124] **FIG. 17** is a detailed isometric view of the replacement LED light source and standard mounting base;

[0125] **FIG. 18** is a detailed isometric view of an incandescent lamp light source and standard mounting base;

[0126] **FIG. 19** is a detailed isometric view of a replacement LED lamp and standard mounting base;

[0127] **FIG. 20** is a front view of a standard halogen light source mounted in a rotating reflector;

[0128] **FIG. 21** is a detailed rear view of a rotating reflector mechanism;

[0129] **FIG. 22** is a detailed front view of the LED light source mounted to a rotating reflector;

[0130] **FIG. 23** is a detailed front view of a replacement LED light source;

[0131] **FIG. 24** is a detailed side view of a replacement LED light source;

[0132] **FIG. 25** is a detailed isometric view of a replacement LED light source and cover;

[0133] **FIG. 26** is a detailed isometric view of a reflector or cullminator;

[0134] **FIG. 27** is a detailed isometric view of a cullminator cup;

[0135] **FIG. 28** is an alternative cross-sectional side view of a cullminator cup;

[0136] **FIG. 29** is an alternative cross-sectional side view of a cullminator cup;

[0137] **FIG. 30** is an alternative cross-sectional side view of a cullminator cup;

[0138] **FIG. 31** is an exploded isometric view of an alternative cullminator assembly and LED light source;

[0139] **FIG. 32** is an alternative partial cut away isometric view of an alternative cullminator assembly and LED light source;

[0140] **FIG. 33** is an environmental view of an emergency vehicle having strip LED light sources;

[0141] **FIG. 34** is an alternative detailed partial cut away view of a strip LED light source;

[0142] **FIG. 35** is an alternative detailed view of an LED light source having sectors;

[0143] **FIG. 36** is an alternative detailed view of a circuit board or LED mounting surface having heat sink wells;

[0144] **FIG. 37** is an alternative detailed isometric view of a reflector assembly;

[0145] **FIG. 38** is an alternative cross-sectional side view of the frame of a reflector assembly;

[0146] **FIG. 39** is an alternative cross-sectional side view of a frame of a reflector assembly;

[0147] **FIG. 40** is an alternative detailed side view of a reflector assembly;

[0148] **FIG. 41** is an alternative detailed isometric view of a reflector assembly;

[0149] **FIG. 42** is an alternative detailed side view of a reflector assembly;

[0150] **FIG. 43** is a graphical representation of a modulated or variable light intensity curve;

[0151] **FIG. 44** is an alternative detailed partial cross-sectional side view of a reflector assembly;

[0152] **FIG. 45** is a partial phantom line top view of the reflector assembly taken along the line of **45-45** of **FIG. 44**;

[0153] **FIG. 46** is an alternative graphical representation of a modulated or variable light intensity curve;

[0154] **FIG. 47** is an alternative isometric view of a reflector assembly;

[0155] **FIG. 48** is a detailed back view of an individual LED light source;

[0156] **FIG. 49** is a detailed front view of an individual LED light source;

[0157] **FIG. 50** is a detailed end view of one embodiment of a reflector assembly.

DETAILED DESCRIPTION OF THE PREFERRED EMBODIMENTS

[0158] A warning signal light according to the principles of the invention is indicated generally herein as numeral **10**. **FIGS. 1 and 2** depict light bar **70** mounted to an emergency vehicle **104**. Light bar **70** includes base **72**, mounting means **74**, cover **82**, and warning signal lights **10**. Also included in light bar **70** are gyrators **90** used to impart motion to warning signal lights **10**.

[0159] Referring to **FIGS. 3 and 9**, warning signal light **10** comprises light support **12**, light sources **30**, controller **50** (shown in **FIG. 11**), and connecting portion **40** for attaching the warning signal light **10** to light bar **70** or gyrator **90**. The warning signal light **10** operates to create a warning signal for use by an emergency vehicle **104** by selectively activating light sources **30** using controller **50**. Alternatively, warning signal light **10** may be formed of a solitary LED light source **30** at the discretion of an individual.

[0160] Light sources **30** are preferably light emitting diodes (LED's) and are generally arranged in aligned columns **32** and rows **34** as shown in **FIGS. 7 and 9**. Each of the light emitting diodes (LED's) may have shoulder portion **38** adjacent LED support **12** and dome **36**. LED's **30** are situated to be in electric communication with controller **50** and a power supply, a battery, or power source. The use of light emitting diodes (LED's) to replace traditional halogen, incandescent, or gaseous discharge xenon lamps reduces heat generation, current draw, and electromagnetic emissions, while increasing lamp life and producing a more true output light color.

[0161] The controller **50** is used to selectively activate columns **32**, rows **34**, or individual LED's **30**, to illuminate any number of a plurality of visually distinct types of warning light signals at any moment; to illuminate more than one of a plurality of visually distinct types of warning light signals simultaneously at any moment; to illuminate one of a plurality of combinations or patterns of visually distinct warning light signals at any moment, or over any desired period of time, or to illuminate more than one of a plurality of combinations or patterns of visually distinct warning light signals over any desired period of time. The plurality of visually distinct warning light signals may include, but are not necessarily limited to, a strobe light signal, a pulsating light signal, an alternating light, a modulated light signal, a flashing light signal, the illusion of a rotating or an oscillating light signal, a reverse character message, or images such as arrows. It should be noted that the controller **50** may also incorporate into any selected warning light signal variable or modulated power intensity to facilitate the provision of a desired unique lighting effect. For example, the controller **50** may illuminate one or more LED light sources **30** to establish a single warning light signal at a given moment. Alternatively, the controller **50** may illuminate one or more light emitting diode light sources **30** to provide two or more warning light signals at any given moment. Further, the controller **50** may simultaneously, consecutively, or alternatively, illuminate one or more LED light sources **30** to establish any desired combination or pattern of illuminated visually distinct warning light signals at any given moment or over a desired period of time. The combination and/or pattern of visually distinct warning light signals may be random or may be cycled as desired by an individual. The illumination of one or more patterns or combinations of warning light signals facilitates the continued observation by an individual. Occasionally, the concentration or attention of an individual is diminished when exposed to a repetitive or to a monotonous light signal. The desired purpose for illumination of a warning light signal is thereby reduced. The provision of a pattern, combination, and/or random illumination of visually distinct warning light signals maximizes the concentration or attention to be received from an individual observing a warning light signal. The purpose of the warning light signal is thereby promoted.

[0162] **FIGS. 11A, 11B**, and **11**C show an embodiment of controller **50** capable of selectively activating columns **32**, rows **34** or individual LED's **30**. Controller **50** generally comprises microprocessor **52** and circuitry **53** and is preferably contained within, attached to, or an element of, LED support **12**. It is envisioned that controller **50** may be programmed by an external controller **55** and powered through cable R.

[0163] In one embodiment, controller **50** generally comprises circuit board **54** or LED mounting surface having microprocessor **52** attached to a low voltage power supply, battery, or electrical source **56**. Microprocessor **52** is configured through circuitry **53** to selectively activate columns **32** of LED's **30**. Transistors Q**9** and Q**10** are in electronic communication with microprocessor **52**, power supply, battery, or electrical source **56**, and their respective columns **32**.**9** and **32**.**10** of LED's **30**. Columns **32** of LED's **30** are connected to transistors Q**1**-Q**8**, which are in turn connected to microprocessor **52** through resistors R**1**-R**8**. Microprocessor **52** is capable of selectively activating transistors Q**1**-Q**8** to allow current flowing through transistors Q**9** and Q-**10** to activate the selected column **32** of LED's **30**. This circuit is capable of producing a strobe light signal, an alternating light signal, a modulated signal, a revolving light signal, a pulsating light signal, an oscillating light signal, or flashing light signal, a reverse character message, or images such as arrows.

[0164] In one embodiment, a rotating or oscillating light signal may be established by the sequential illumination of entire columns **32** of LED's **30** by turning a desired number of columns on and then sequentially illuminating one additional column **32** while turning another column **32** off. Alternatively, the rotating or oscillating warning light signal may be created by selectively activating columns **32** of LED's **30**. The following algorithm may be used to provide a counterclockwise revolving light signal (**FIG. 9**):

[0165] 1) column A is activated at 0% duty cycle (column A 0%), column B 0%, column C 0%, column D 0%, column E 0%, column F 0%, column G 0%, column H 0%, column I 0%, and column J 0%;

[0166] 2) column A 25%, column B 0%, column C 0%, column D 0%, column E 0%, column F 0%, column G 0%, column H 0%, column I 0%, and column J 0%;

[0167] 3) column A 50%, column B 25%, column C 0%, column D 0%, column E 0%, column F 0%, column G 0%, column H 0%, column I 0%, and column J 0%;

[0168] 4) column A 75%, column B 50%, column C 25%, column D 0%, column E 0%, column F 0%, column G 0%, column H 0%, column I 0%, and column J 0%;

[0169] 5) column A 100%, column B 75%, column C 50%, column D 25%, column E 0%, column F 0%, column G 0%, column H 0%, column I 0%, and column J 0%;

[0170] 6) column A 100%, column B 100%, column C 75%, column D 50%, column E 25% column, column F 0%, column G 0%, column H 0%, column I 0%, and column J 0%;

[0171] 7) column A 75%, column B 100%, column C 100%, column D 75%, column E 50%, F 25%, column G 0%, column H 0%, column I 0%, and column J 0%;

[0172] 8) column A 50%, column B 75%, column C 100%, column D 100%, column E 75%, column F 50%, column G 25%, column H 0%, column I 0%, and column J 0%;

[0173] 9) column A 25%, column B 50%, column C 75%, column D 100%, column E 100%, column F 75%, column G 50%, column H 25%, column I 0%, and column J 0%;

[0174] 10) column A 0%, column B 25%, column C 50%, column D 75%, column E 100%, column F 100%, column G 75%, column H 50%, column I 25%, and column J 0%;

[0175] 11) column A 0%, column B 0%, column C 25%, column D 50%, column E 75%, column F 100%, column G 100%, column H 75%, column 150%, and column J 25%;

[0176] 12) column A 0%, column B **0**%, column C 0%, column D 25%, column E 50%, column F 75%, column G 100%, column H 100%, column I 75%, and column J 50%;

[0177] 13) column A 0%, column B 0%, column C 0%, column D 0%, column E 25%, column F 50%, column G 75%, column H 100%, column I 100%, and column J 75%;

[0178] 14) column A 0%, column B 0%, column C 0%, column D 0%, column E 0%, column F 25%, column G 50%, column H 75%, column 1100%, and column J 100%;

[0179] 15) column A 0%, column B 0%, column C 0%, column D 0%, column E 0%, column F 0%, column G 25%, column H 50%, column I 75%, and column J 100%;

[0180] 16) column A 0%, column B 0%, column C 0%, column D 0%, column E 0%, column F 0%, column G 0%, column H 25%, column I 50%, and column J 75%;

[0181] 17) column A 0%, column B 0%, column C 0%, column D 0%, column E 0%, column F 0%, column G 0%, column H 0%, column I 25%, and column J 50%;

[0182] 18) column A 0%, column B 0%, column C 0%, column D 0%, column E 0%, column F 0%, column G 0%, column H 0%, column I 0%, and column J 25%;

[0183] 19) column A 0%, column B 0%, column C 0%, column D 0%, column E 0%, column F 0%, column G 0%, column H 0%, column I 0%, and column J 0%;

[0184] 20) return to step 1).

[0185] A clockwise revolving light signal may be created by performing steps 1-19 in descending order then repeating the steps. An oscillating light signal may be created by performing: (a) steps 7 through 16 in ascending order; (b) steps 7 through 16 in descending order; and (c) repeating (a) and (b).

[0186] A second embodiment of controller **50** provides a means for activating LED's **30** individually to allow for greater flexibility in the type of warning light signal created. This embodiment of the invention is capable of displaying information in different colors or patterns. Depending on the size of the display, it may be necessary to scroll the symbols or characters across the display to accommodate for a larger visual appearance. It is envisioned that the mirror image of patterns, symbols, or characters could be displayed making the message easily readable by drivers viewing the signal in a rear view mirror. It is also envisioned that this embodiment of the invention could display arrows indicating a direction a vehicle is to travel or other images as shown in **FIG. 2**. In addition, combinations of warning signal lights, direction arrows, and other information carrying signals or images, could be displayed simultaneously by the invention.

[0187] LED support **12** is envisioned to have several embodiments. One embodiment, shown in **FIG. 9**, consists of a panel **14** having front **16**, back **18**, top **20**, bottom **22** and sides **24**. LED's **30** are arranged on front **16**, with domes **36** extending therefrom, in columns **32** and rows **34**. LED's **30** are in electric communication with controller **50** which may be contained or sealed within LED support **12** to provide protection from the elements.

[0188] Another embodiment of warning signal light **10** is depicted in **FIG. 10**. Here, the backs **18** of two panels **14** are attached together to allow for a light signal to be produced on two sides. The two panels **14** form LED support **12**. Alternatively, it is envisioned that a single panel **14** having LED's arranged about front **16** and back **18** could be used as well.

[0189] **FIGS. 6 and 8** show further embodiments of warning signal light **10**. In **FIG. 8**, panels **14** are used to form an LED support **12** having four sides and generally shaped as squared. **FIG. 6** shows panels **14** connected to form an LED support **12** having three sides and generally triangular in shape. In both embodiments, LED's **30** are arranged about the fronts **16** of the panels **14**. It is further envisioned that panels **14** may be integral to each other.

[0190] Yet another embodiment of warning signal light **10**, consists of a flexible panel **14** and controller **50** to allow LED support **12** to be formed into various shapes. **FIG. 5** shows LED support **12** formed into a cylinder. Further variations include the use of flexible panels **14** to form other shapes such as semicircles (**FIG. 12**) or to simply conform to a surface of an emergency vehicle (**FIGS. 13 and 14**). This embodiment is particularly useful for undercover vehicles which generally position the warning signal lights inside the vehicle. For example, panel **14** could be attached to the front, rear, or side window of an undercover police vehicle.

[0191] It should be noted that numerous other shapes could be formed from panels **14** including those formed from combinations of flat, curved, and flexible panels at the preference of an individual.

[0192] In each of the embodiments discussed above, the array of LED's **30** may be formed of the same or differently colored LED's. Generally, each column **32** or row **34** may consist of a series of differently colored LED's. Controller **50** may be configured to select the color of the LED's to be illuminated forming the light signal. Accordingly, the user may select a blue, red, white, yellow, green, or amber color or any combination thereof to be used as the color of light signal. Alternatively, the warning signal **10** may be formed of individual LED's **30** which may be selectively illuminated at the discretion of an individual.

[0193] It is also envisioned that the controller **50** may control warning signal lights **10** having multiple sides (**FIGS. 5, 6, 8**, and **10**) such that each side is capable of producing warning light signals or combination warning light signals that are independent and/or different from those produced upon the other sides. For example, the squared shape warning signal light shown in **FIG. 8** may produce or simulate a red revolving light on first side **15.1**, while second side **15.2** is simultaneously producing a blue oscillating light, while third side **15.3** is producing or simulating a stationary white light, and while fourth side **15.4** is producing a white strobe light.

[0194] Another embodiment of warning signal light **10** is depicted in **FIGS. 1 and 2** as light bar **70** which extends from driver side **100** to passenger side **102** of emergency vehicle **104**. Cover **82** protects light bar **70** from the elements. Each side of light bar **70** may have LED's **30** to produce or simulate warning light signals on each side of emergency vehicle **104**. Furthermore, controller **50** may be used to create multiple warning light signals on each side of light bar **70**. For example, controller **50** may create a simulated revolving blue light positioned at front passenger side **102** of light bar **70**, oscillating white lights positioned at front driver side **100**, and yellow arrows there between. Additional or alternative warning light signals may be produced out the back **18** and sides of light bar **70**. It is further envisioned that light bar **70** may consist of a single light source, a single row of light source or a large array of LED's **30** across each side (not shown). This embodiment provides the largest display and, therefore, is best suited to display desired combinations of warning lights and images. It should be noted that the identified types of warning light signals, combinations and/or patterns of warning light signals, may also be reproduced through the illumination of a single row of LED light sources **30**.

[0195] Mechanical rotation and oscillation of warning signal lights **10** about axis A is possible by way of attachment to gyrator **90** depicted in **FIG. 3**. Gyrator **90** mounted to light bar **70**, generally comprises electric motors **96** having cables **97**. Gyrator **90** is configured to receive connecting portion **40** of warning signal light **10**. Cable **97** is preferably connected to a power supply and either an external controller **55** or controller **50**.

[0196] Gyrator **90** may be capable of rotating or oscillating warning signal light **10** about a single or dual axis of rotation A. **FIG. 3** shows gyrator **90** configured to rotate or oscillate warning signal light **10** about a vertical axis A by way of motor **96.1** and oscillate warning signal light **10** about a horizontal axis A by way of motor **96.2**. Rotation or oscillation of warning signal light **10** about vertical axis A is accomplished through direct attachment of connecting portion to motor **96.1**. Oscillation of warning signal light **10** about horizontal axis A is accomplished by attaching swivel arm **99** to bracket **99.1** and post **99.2** which is mounted to motor **96.2**.

[0197] Alternative methods for imparting rotation or oscillation motion to warning signal light **10** may be accomplished through the use of electric motors, toothed gears, and worm gears. In addition, maintaining electrical communication between a power supply and an external controller **55** with a revolving or oscillating warning signal light **10** may be accomplished using brushes or other means without sacrificing the operation of the warning signal light **10**.

[0198] In another embodiment as depicted in **FIGS. 13 and 14**, emergency vehicle **104** may include a front or rear windshield **106**. The front or rear windshield **106** is generally angularly offset with respect to the vehicle at an approximate angle of 45 degrees. In this embodiment, the mounting of a panel **14** of light sources **30** in flush contact with the interior of a front or rear windshield **106** occurs through the use of angular offsets **108** for the light sources **30** such that light emitted from the light sources **30** occur at a horizontal visual line (V) which is substantially parallel to the plane of a vehicle and not at an approximate angle of 45 degrees upward, which corresponds to the angle for the front or rear windshield **106**.

[0199] In this embodiment, the ease of visualization of the light source **30** is significantly enhanced by the downward angular offsets **108** which position the light sources **30** along parallel visual lines of sight (V). LED supports **12** or panels **14** may then be positioned in any desired location within the interior of a vehicle in flush contact or proximate to the front or rear windshield **106**. A suitable cable **97** is required to provide electrical power for illumination of the light sources **30**. It should be noted that the angle of incidence for the angular offsets **108** may vary considerably dependent upon the make or model for the vehicle to include the warning signal lights **10**.

[0200] It should be further noted that the warning signal light **10** may be used with an automobile, motorcycle, snowmobile, personal water craft, boat, truck, fire vehicle, helicopter, and/or any other type of vehicle receptive to the use of warning signal lights **10**. It should be further noted that LED support **12** or panel **14** may be mounted to the interior top dashboard of a vehicle proximate to the front windshield **106** or to the interior top rear dashboard proximate to the rear windshield **106** of a vehicle.

[0201] Mounting of a light support **12** or panel **14** to either the front or rear dashboards may minimize the necessity for inclusion of angular offset **108** for the light sources **30**. It should be further noted that LED supports **12** or panels **14** may be releasably affixed to the interior of the front or rear windshields **106** via the use of suction cups, hook-and-loop fabric material such as Velcro®, and/or any other releasable affixation mechanism at the preference of an individual. An individual may then adjust and reposition the location of the light support **12** or panels **14** anywhere within the interior of a vehicle as desired for maximization of visualization of the warning signal lights **10**.

[0202] In another alternative embodiment as depicted in **FIG. 15**, warning signal light **10** may function as a remote, revolving, or stationary beacon. In this embodiment, LED

support **12** or panel **14** is preferably releasably connected to a transportable support **120** via the use of a bracket. The transportable support **120** may be a tripod having telescoping legs or may be any other type of support as preferred by an individual. In this embodiment, LED light support **12** or panel **14** is electrically connected to an elongate electrical extension cable **97** which may include any desired adapter for electrical connection to a power source which may be a vehicle. The remote light support **12** or panel **14** may also include plug-in adapters for electrical connection to any desired electrical power source other than a vehicle as is available.

[**0203**] The transportable support **120** may also include gyrator **90** as earlier described to provide a desired rotational or oscillatory motion for warning signal light **10**. A controller **50** having a microprocessor **52** may also be integral to, or in electrical communication with, LED's **30** for the provision of multi-colored lights, flashing, alternating, modulated, moving characters, arrows, stroboscopic, oscillating and/or revolving warning light signals as desired by an individual. In this embodiment, the warning signal light **10** may be physically separated from an emergency vehicle **104** any desired distance to facilitate or enhance the safety of a potentially dangerous situation necessitating the use of warning signal lights **10**. In addition, it should be noted that a series of remote warning signal lights **10** may be electrically coupled to each other for any desired distance to again facilitate the safety of a situation necessitating the use of warning signal lights **10**.

[**0204**] **FIG. 16** shows a perspective view of a xenon lamp **1**. Xenon lamp **1** has a base pedestal **2** which is typically formed of rubber, plastic, or other insulating material. Base pedestal **2** has a top surface **3** which may support a glass tube **4** which may have a looped curve such that an anode end and a cathode end are each supported on a top surface. The anode and cathode ends may be sealed and respective electrical conductors **5** and **6** may pass through the sealed ends and through the top surface **3**. A trigger wire **7** may be helically wound about the exterior surface of the glass tube **4** and the ends of the trigger wire **7** may be passed through the top surface **3** of the base pedestal **2** to form a third conductor on the underside of the base pedestal **2**.

[**0205**] Base pedestal **2** may have an upper cylinder portion **8** extending from a lower shoulder all of which may extend above the top surface **3**. The upper cylindrical portion **8** may include an upper shoulder **9**. A glass dome (not shown) may be sized to fit over the xenon lamp **1** and glass tube **4** for resting on the upper shoulder **9**. The glass dome may be preferably made from a transparent or silicate glass material capable of withstanding heat stress. The outer diameter of the glass dome is typically about one inch which is sized to fit through the conventional opening in a typical vehicle lamp fixture. The exterior glass dome surface typically has a much lower temperature during operation than the exterior surface of the glass tube **4** forming a part of the xenon lamp **1**. The temperature drop between the glass tube **4** and the glass dome facilitates the use of coloring of the dome to provide a colored lamp by virtue of the xenon light intensity passing through the colored dome.

[**0206**] The xenon lamp **1** is preferably aligned for insertion into a conventional opening **248** of a light reflector **260** (**FIGS. 20 and 21**). The light receptacle opening **248** in the light reflector **260** is typically about one inch in diameter; and the glass dome and base pedestal **2** are preferably sized to fit within the light receptacle opening **248**. The xenon lamp **1** in its final construction may include a cover plate (not shown) affixed over the bottom opening of the base pedestal **2** for affixation to a light reflector **260** via the use of screws which pass through the screw apertures **9.1**. The anode, cathode, and trigger wire **7** preferably traverse the base pedestal **2** and may include a plug **9.2** which is adapted for engagement to a controller/power supply for a motor vehicle.

[**0207**] The light reflector **260** may be a conventional light reflector of the type found in vehicles having a clear plastic or glass lens cover. The glass or lens cover may be fitted over the front edge of the reflector **260** in a manner which is conventional with vehicle lamps. It should be noted that the light reflector **260** may be parabolically or other shaped at the preference of an individual. The light reflector **260** may be mounted to a motor for rotation about a vertical axis. In this embodiment the light source/replacement lamp **200** may be integrally connected or affixed to the reflector **260** for simultaneous rotation about the vertical axis during use of the motor. Alternatively, the light source/replacement lamp **200** may be fixed proximate to the vertical axis where the light reflector **260** is rotated around the stationary replacement lamp **200** to provide for the visual appearance of a rotational light source.

[**0208**] The glass domes as used with the xenon lamps **1** may be colored with any color as preferred by an individual including but not limited to red, blue, amber, green, and/or white. It should be noted that the light fixture incorporating the light reflector **260** may be a headlight fixture or a turn signal light fixture where the xenon lamp **1** is mounted into the light reflector **260** on either side of a centrally-mounted halogen light bulb which may be used as a headlight lamp. In this case, the light fixture could perform its normal function as a headlight and could alternatively flash several additional colors, depending upon the needs of the user. This configuration provides an emergency flashing light construction which is wholly concealed within a normal head lamp of a vehicle and is, therefore, not readily visible from outside the vehicle unless the lights are flashing. This construction may find application in an unmarked emergency vehicles such as might be used by some law enforcement officers.

[**0209**] In operation, the LED replacement lamp **200** may be constructed as a replacement part for a conventional incandescent or xenon gaseous discharge lamp. The standard mounting base **204** and LED support assembly **212** may be sized to readily fit into the same light opening as an incandescent lamp would require, although it is apparent the electrical driving circuit for the LED replacement lamp **200** may require modifications to accommodate the LED operating principles.

[**0210**] LED warning signal lamp **200** may be used in a variety of locations about a vehicle. It should be noted that the use of the LED warning signal lamps **200** are not necessarily limited to positioning adjacent to the head lamp or headlight, tail light, or turn signal illumination devices for an emergency vehicle **104**. The LED warning signal lamp **200** may be used as a rotational, pulsating, or oscillating reflector light within the interior adjacent to a front, rear, and/or side window of a vehicle.

[0211] It is also envisioned that the controller **50** may control warning signal lights **200** independently of one another such that each warning signal lamp **200** is capable of producing warning light signals which are independent and/or different from those produced at another location about an emergency vehicle **104**. For example, a front left location may produce a red colored light while simultaneously a front right location may produce an amber colored light and a right rear location may produce a green colored light and a left rear location may produce a blue colored light. The controller **50** may then alternate the color of the light illuminated from the warning signal lamp **200** in each area as desired by an individual. Alternatively, the controller **50** may sequentially activate warning signal lamps **200** positioned about an emergency vehicle **104** to simultaneously produce a desired color or alternating sequence of colors. It should also be noted that the controller **50** may simultaneously illuminate all LED warning signal lamps **200** to produce a flashing or strobe light which may be particularly useful in certain emergency situations. It should be further noted that the controller **50** may selectively illuminate individual LED warning signal lamps **200** in any desired color, pattern, and/or combination as desired by an individual.

[0212] Referring to **FIG. 17** in detail, an LED replacement lamp **200** is depicted. In this embodiment the LED replacement lamp **200** includes a standard mounting base **204** which preferably includes a top surface **206**. Extending upwardly from the top surface **206** is preferably an upper cylindrical portion **208** which includes an upper shoulder **210**. Extending upwardly from the upper shoulder **210** is preferably an LED support assembly **212** which includes one or more LED lamp modules **213**. The LED lamp modules **213** may be of the same or different colors at the discretion of an individual. A wire **202** is preferably in electrical communication with the plurality of LED lamp modules **213** to provide for electrical communication with the controller **50** to individually activate or illuminate LED lamp modules **213** as preferred by an individual. A plug-in connector **40** is preferably coupled to the wire **202** for engagement to the controller **50** and/or power source of an emergency vehicle **104**.

[0213] The LED replacement lamp **200** is preferably adapted to be positioned in a one inch light receptacle opening **248** (approximate size) which has been previously placed through the backside of a reflector assembly **260**. The LED replacement lamp **200** is preferably used to replace a xenon gaseous discharge lamp or incandescent lamp as previously mounted to a base which is inserted into opening **248** in a reflector assembly **260**. Illumination of one or more individual LED lamp modules **213**, as mounted in the reflector assembly **260**, enables the reflector assembly/lens to take on the appearance of a warning signal or emergency signaling lamp. The LED replacement lamp **200** preferably replaces the xenon gaseous discharge or incandescent lamp assemblies with high brightness, long life LED technology.

[0214] Referring to **FIG. 18**, an incandescent lamp or quartz halogen H-2 lamp is depicted and in general is indicated by the numeral **220**. The incandescent lamp assembly **220** is preferably formed of a standard mounting base **222**. A vertical post **224** preferably extends upwardly from the standard mounting base **222**. The incandescent light bulb **226** is preferably mounted in the vertical post **224**. The vertical post **224** may extend below the standard mounting base **222** to provide for electrical coupling with a wire **228** which preferably includes a standard pin connector **230**. The standard pin connector **230** is preferably adapted for electrical communication to a power supply and/or controller **50** for activation of the incandescent lamp assembly **220**. The incandescent lamp assembly **220** may be stationary or mounted in a rotational light reflector **260** as desired by an individual. The light bulb **226** may be a halogen H-2, 55 watt, lamp at the discretion of an individual.

[0215] As depicted in **FIG. 19**, LED replacement lamp **200** is adapted to replace the incandescent lamp assembly **220** in a stationary or rotational light reflector **260**. The LED replacement lamp **200** as depicted in **FIG. 19** preferably includes a standard mounting base **234** and a vertical post **236**. It should be noted that the vertical post **236** may extend upwardly from the standard mounting base **234** and may alternatively extend below the standard mounting base **234** at the preference of an individual. An LED mounting area **238** may be preferably integral or affixed to the upper section of the vertical post **236**. The LED mounting area **238** preferably includes a plurality of individual LED module lamps **240** which may be individually, sequentially, or illuminated in combination with other light sources at the preference of an individual.

[0216] The individual LED module lamps **240** are preferably in electrical communication with a wire **242** which includes an integral standard wire connector **244**. The wire connector **244** is preferably adapted to be plugged into a controller **50** or power supply. Communication is thereby provided for selective illumination of the individual LED module lamps **240**. It should be noted that a group of individual LED module lamps **240** are mounted in the LED mounting area **238**. It should also be noted that the LED replacement lamp **200** is preferably adapted to replace the incandescent lamp assembly **220** or a xenon gaseous discharge lamp assembly base of **FIG. 16** or **18**. The purpose of the LED replacement lamp assembly **200** is to replace existing xenon gaseous discharge and incandescent lamps with new LED technology while simultaneously utilizing existing standard bases in a standard lamp enclosure. For example, an individual may choose to replace a halogen "H-2" 55 watt lamp with an "LED-2" lamp in an existing rotating light fixture with no other structural modifications, yet achieving the advantages of less power consumption, greater reliability, easier installation, less RF emissions (which reduces interference with radio or electronic equipment), cooler operating temperatures, simplified circuitry, longer life, greater durability and duty capability, and simultaneously providing pure and easier-to-see color light output.

[0217] As depicted in **FIG. 20, a** rotational light reflector **246** is disclosed. The rotational light fixture **246** includes a reflector assembly **260** having a standard opening **248**. The incandescent light assembly **220** is preferably positioned in the standard opening **248** for extension of the vertical post **224** outwardly from the reflector assembly **260** for positioning of the light bulb **226** in a desired location. Light emitted from the standard halogen light bulb **226** preferably reflects off the parabolic-shaped reflector assembly **260** for transmission of light in a direction as indicated by arrows AA for visualization by individuals. Reflector assembly **260** and

light source **226** may be rotated via the use of gears **250** which are preferably driven by electrical motors not shown. In this manner, the rotational light fixture **246** including the reflector assembly **260** may be rotated at any desired velocity as preferred by an individual.

[**0218**] As may be seen in **FIG. 21, a** rear or back view of the rotational light fixture **246** is provided. As may be seen in **FIG. 21**, the light source is preferably positioned in the standard opening **248**. The wire **228** as in electrical communication with the light source and is preferably connected via the standard pin connector **230** for electrical communication with a power source.

[**0219**] As depicted in **FIG. 22**, an alternative rotational light fixture **252** is depicted. Rotational light fixture **252** preferably includes a reflector assembly **260** which may be parabolic in shape for the transmission of light along a common axis as depicted by arrows BB for visualization by an individual. In this embodiment, the individual LED module lamps **240** may be positioned to the front of the reflector assembly **260** through the use of a frame **254**. The frame **254** may be integral or connected to a gear **250** as desired by an individual. The gear **250** may be driven by a motor for rotation of the light fixture **252**. It should be noted that the individual LED module lamps **240** are preferably in electrical communication with a power source not shown.

[**0220**] It should be further noted that the rotational light fixture **252** may also be adapted for the provision of an oscillating or pulsating warning light signal at the preference of an individual.

[**0221**] An alternative replacement LED lamp **200** is depicted in FIGS. **23-25**. In this embodiment the LED replacement lamp **200** includes a standard mounting base **270**. The standard mounting base **270** also preferably includes a plurality of teeth **272**. The teeth **272** are preferably adapted for mating coupling with gears integral to a motor and/or reflector **260**, or rotational light fixture **246** to facilitate rotation and/or oscillation of the replacement LED lamp **200**. The standard mounting base **270** also preferably includes a top surface **274** opposite to the teeth **272**.

[**0222**] An upper cylinder portion **276** is preferably adjacent to the top surface **274**. The upper cylinder portion **276** preferably includes an upper shoulder **278**. Extending upwardly from the upper shoulder **278** is preferably a circuit board, LED mounting surface, or support **280** which preferably includes one or more LED illumination sources **282**. The LED illumination sources **282** may be of the same or different colors at the preference of an individual. A wire **284** is preferably in electrical communication with the LED illumination sources **282** to provide for communication and contact with the controller **50** for combination and/or individual illumination of the LED illumination sources **282**. A standard plug-in connector may be integral to the wire **284** to facilitate coupling engagement to the controller **50** and/or power source for a vehicle **104**.

[**0223**] The circuit board or LED mounting surface **280** is preferably adapted to have a first side **286** and an opposite side **288**. Preferably a plurality of LED illumination sources **282** are disposed on both the first side **286** and the opposite side **288** of the replacement lamp **200**.

[**0224**] A glass dome or protector **290** is preferably adapted for positioning over the circuit board or LED mounting surface **280** for sealing engagement to the top surface **274** of the standard mounting base **270**. The glass dome **290** may be formed of transparent plastic material or a transparent or silicate glass material capable of withstanding heat stress at the preference of an individual. It should be further noted that the glass dome **290** preferably protects the circuit board or LED mounting surface **280** and the LED illumination sources **282** from contamination and from exposure to moisture during use of the replacement lamp **200**. In this regard, the sealing lip **292** of the glass dome **290** preferably is securely affixed to the top surface **274** to effectuate sealing engagement therebetween. The outer diameter of the glass dome **290** is preferably about one inch which is sized to fit within the conventional opening **248** in a typical lamp fixture or reflector assembly **260**.

[**0225**] The replacement lamp **200** depicted in **FIGS. 23, 24**, and **25** is also adapted to be positioned in a one inch light receptacle opening **248** which has been placed into a reflector assembly **260**. Illumination of one or more individual LED illumination sources **282** as disposed on the circuit board or LED mounting surface **280** enables the replacement lamp **200** to take on the appearance of a warning signal or emergency signaling lamp.

[**0226**] The replacement lamp as depicted in **FIGS. 23, 24**, and **25** may alternatively permit the circuit board **280** to extend below the upper shoulder **278** to facilitate affixation and positioning relative to the standard mounting base **270**.

[**0227**] The controller **50** may regulate the illumination of the LED light sources **282** individually, or in combination, to provide a desired warning lighting effect for the replacement lamp **200**. Also, the controller **50** may illuminate the LED light sources **282** individually, or in combination, independently with respect to the first side **286** and the opposite side **288** to provide different warning light effects to be observed by an individual dependant upon the location of the person relative to the replacement lamp **200**. The controller **50** may also simultaneously or independently regulate the power intensity to the LED illumination sources **282** to provide for a modulated or variable light intensity for observation by an individual. It should also be noted that the LED illumination sources **282** may be formed of the same or different colors at the preference of an individual to provide a desired type of warning light effect for the replacement lamp **200**.

[**0228**] In an alternative embodiment, the LED warning signal lamps **10** or LED replacement lamps **200** may be electrically coupled to a controller **50** which in turn is used to provide a modulated power intensity for the light source. A modulated power intensity enables the provision of various power output or patterns of illumination for creation of a plurality of visually distinct warning light signals without the use of mechanical devices. In these embodiments, the controller **50** illuminates selected light sources **282** and the controller **50** may also regulate and/or modulate the power supplied to the light source **282** thereby varying the intensity of the observed light. In addition, the controller **50** may modulate the power supplied to the LED warning signal lamps **10** or LED replacement lamps **200** in accordance with a sine wave pattern having a range of 0 to full intensity. At the instant of full intensity, the controller **50** may also signal or regulate a power burst for observation by an individual. The controller **50** operating to regulate and/or modulate the power intensity for the warning signal lamps **10** or LED

replacement lamps **200** in conjunction with illumination and non-illumination of selected light source **282** may establish the appearance of a rotational warning light source or pulsating light source without the necessity of mechanical rotational or oscillating devices. The current draw requirements upon the electrical system of an emergency vehicle **104** is thereby significantly reduced. Spatial considerations for an emergency vehicle are also preferably optimized by elimination of mechanical, rotational and/or oscillation devices.

[**0229**] The controller **50** may also regulate the modulated power intensity for the provision of a unique variable intensity warning light signal. The unique variable intensity light source is not required to cycle through a zero intensity phase. It is anticipated that in this embodiment that the range of intensity will cycle from any desired level between zero power to full power. A range of power intensity may be provided between thirty percent to full power and back to thirty percent as regulated by the controller **50**. It should also be further noted that an irregular pattern of variable power intensity may be utilized to create a desired type of warning light effect. In addition, the controller **50** may also sequentially illuminate adjacent columns **32** to provide a unique variable rotational, alternating, oscillating, pulsating, flashing, and/or combination variable rotational, alternating, pulsating, oscillating, or flashing visual warning light effects. A pulsating warning light signal may therefore be provided through the use of modulated power intensity to create a varying visual illumination or intensity effect without the use of rotational or oscillating devices. The controller **50** may also modulate the power intensity for any combination of light sources **30** or **282** to provide a distinctive or unique type of warning light signal.

[**0230**] The use of a controller **50** to provide a modulated power intensity for a light source may be implemented in conjunction with replacement lamps **200**, flexible circuit boards having LED light sources **30**, paneled circuit boards or LED mounting surfaces having LED light sources **30**, light bars **70** having LED light sources **30**, a cylindrical, square, rectangular, or triangular-shaped circuit boards having LED light sources **30** and/or any other type or shape of LED light sources including but not limited to the types depicted in FIGS. **1-50** herein.

[**0231**] Further, the controller **50** may be utilized to simultaneously provide modulated or variable light intensity to different and/or independent sections, areas, and/or sectors **326** of a light source (**FIG. 35**). Also, the controller **50** may be utilized to simultaneously provide modulated or variable light intensity to different and/or independent sectors, areas, and/or sections **326** of the forward facing side or rearward facing side of the light bar **70** for the provision of different warning light signals or a different warning light effects on each side. In this embodiment it is not required that the forward facing and rearward facing sides of the light bar **70** emit the identical visual patterns of illuminated light sources **30**. The controller **50** may regulate and modulate the variable light intensity of any desired sector **326** of the forward facing side independently from the rearward facing side of the light bar **70**. The controller **50** may thereby provide any desired pattern and/or combination of patterns of warning light signals through the utilization of variable and/or modulated light intensity for the forward facing side, and a different type or set of patterns and/or combination of patterns of warning light signals having variable or modulated light intensity for the rearward facing side of the light bar **70** as desired by an individual. It should be further noted that an infinite variety of patterns and/or combinations of patterns of warning light signals may be provided for the forward facing side and the rearward facing side of the light bar **70** a the preference of an individual.

[**0232**] The use of the controller **50** to modulate the power intensity for a light source **30** to provide a unique warning light signal may be utilized within any embodiment of an LED light source **10**, light bar **70** light support, replacement lamp **200** or reflector assembly as described in FIGS. **1-50** herein.

[**0233**] It should be further noted that the modulation of the power intensity for a light source **30** or replacement lamp **200** may be used in conjunction, or as a replacement to, the sequential illumination of rows, columns, and/or individual LED light sources **30** to provide a desired type of unique warning light effect.

[**0234**] The modulated power intensity may be regulated by the controller **50** to create a unique warning light signal within a single sector **326** or in conjunction with multiple separated or adjacent sectors **326** of light bar **70** or light support for the provision of any desired composite emergency warning light signal. All individual LED light sources **30** within a light bar **70** or light support may be simultaneously exposed to incrementally increased modulated power intensity to provide for an incremental increase in illumination. A power burst at full power may be provided at the discretion of an individual. The modulation of the power intensity in conjunction with the incremental increase in illumination of all LED light sources **30** within light bar **70** or light support may provide the appearance of rotation of a warning light signal when observed by an individual. The power exposed to the individual light sources **30** may then be incrementally decreased at the preference of an individual. It should be noted that the power is not required to be regularly incrementally increased or decreased or terminated. It is anticipated that any pulsating and/or modulated variable light intensity may be provided by the controller **50** to the LED light sources **30**.

[**0235**] It should also be noted that all individual LED light sources **30** within a light bar **70** are not required to be simultaneously and incrementally illuminated to provide for the appearance of rotation. For example, a light bar **70** or light support may be separated into one or more distinct segments **326** which are formed of one or more columns **32** of LED light sources **30**. a particular segment **326** may be selected as a central illumination band which may receive the greatest exposure to the modulated or variable power intensity and, therefore, provide the brightest observable light signal. An adjacent segment **332** may be disposed on each side of the central illumination band **330** which in turn may receive modulated or variable power intensity of reduced magnitude as compared to the central illumination band **330**. A pair of removed segments **333** may be adjacent and exterior to the segments **332**, and in turn, may receive exposure to a modulated power source of reduced intensity as compared to segments **332**. The number of desired segments may naturally vary at the discretion of an individual. The controller **50** may thereby regulate a power source to provide a modulated or variable power intensity to

each individual segment **330**, **332**, or **333** (**FIG. 35**) to provide for a unique warning light effect for the light bar **70** or light support.

[**0236**] It should be further noted that light supports **12** may be flat and rigid, pliable, moldable, triangular, cylindrical, partially cylindrical, and/or any other shape as desired by an individual provided that the essential functions, features, and attributes described herein are not sacrificed.

[**0237**] The provision of a modulated power intensity to the light bar **70** or light support may also be coupled with or in combination to the sequential illumination of columns **32** as earlier described. In this situation, the warning light signal may initially be dim or off as the individual columns **32** are sequentially illuminated and extinguished for illumination of an adjacent column or columns **32**. The power intensity for the illuminated column or columns **32** may simultaneously be incrementally increased for a combination unique rotational and pulsating modulated or variable warning light signal. In addition, the controller **50** may be programmed to provide the appearance of rotation pulsation and/or oscillation at the discretion of an individual.

[**0238**] Each individual LED light source **30** preferably provides an energy light output of between 20 and 200 or more lumens as desired by an individual.

[**0239**] Each light support **12** may contain a plurality of rows **34** and columns **32** of individual LED light sources **30**. The light supports **12** are preferably in electrical communication with the controller **50** and power supply. The supports **12** preferably are controlled individually to create a desired warning light signal for an emergency vehicle **104** such as rotation, alternating, oscillation, strobe, flashing, or pulsating as preferred by an individual. Each support **12** may be controlled as part of an overall warning light signal or pattern where individual supports **12** may be illuminated to provide a desired type or combination light signal in addition to the provision of a modulated or variable power intensity for the light source **30**.

[**0240**] Modulated power intensity may be regulated by the controller **50** to create the appearance of rotation within a single support **12** or in conjunction with multiple separated, independent or adjacent supports **12** for the provision of a composite emergency warning light signal.

[**0241**] It should be noted that each portion, section, sector, or area **326** of light bar **70** or light support may be controlled as part of an overall warning light signal or pattern where individual sections or sectors **326** may be illuminated to provide a desired type of warning light signal including but not limited to rotation and/or oscillation through the use of a modulated or variable power intensity. Alternatively, the controller **50** may provide for the random generation of light signals without the use of a preset pattern at the preference of an individual.

[**0242**] Controller **50** may be used to selectively activate individual LED's **30** to create a pulsating light signal, a strobe light signal, a flashing light signal, an alternating light signal, and/or an alternating colored flashing light signal for an emergency vehicle.

[**0243**] Controller **50** provides a means for activating LED's **30** individually to allow for greater flexibility in the type of warning light signal created. This embodiment of the invention is also capable of displaying information in a variety of different colors or sequential illumination of colors.

[**0244**] Referring to **FIG. 33**, the emergency vehicle **300** preferably includes a light bar or light support **302** which may include one or more panels of LED light sources **306**. A strip LED light source **308** may also be secured to the exterior of the emergency vehicle **300** at any location as desired by an individual. It is anticipated that the strip LED light source **308** may preferably encircle an entire emergency vehicle **300** to enhance the visualization of the emergency vehicle **300** as proximate to an emergency situation.

[**0245**] Referring to **FIG. 34**, the strip LED light source **308** is preferably comprised of a circuit board **310** having an array **312** of individual LED light sources **306**. The LED light sources **306** are preferably in electrical communication with each other via electrical contacts **314**. Each circuit board **310** is preferably in electrical communication with a power supply and/or controller **50** via the use of wires **316**. Each individual LED light source **306** as included within a strip LED light source **308** may be enclosed within a reflector **370** to facilitate and maximize light output along a desired visual line of sight. It should be noted that the LED light sources **306** preferably have maximum illumination at an angle of incidence approximately 40°-45° downwardly from vertical. The strip LED light sources **308** preferably include a back-side. The backside preferably includes an adhesive, magnetic, or other affixation device which may be used to secure the strip LED light sources **308** to the exterior of an emergency vehicle **300** in any desired pattern or location. The strip LED light sources **308** may also be enclosed within a transparent cover **324** which prevents moisture or other contamination from adversely affecting the performance of the LED light sources **306** during use of the strip LED light source **308**.

[**0246**] Wires of adjacent strip LED light sources **308** may preferably be intertwined to extend across a vehicle for coupling to a power supply at a central location. The wires are preferably connected to the controller **50** which may be used to regulate the illumination of individual LED light sources **306** and/or individual panels of the strip LED light sources **308** to provide for the appearance of sequential, pulsating, alternating, oscillating, strobe, flashing, modulated, and/or rotational lights for an emergency vehicle **300**. It should be noted that the individual LED light sources **306** within the strip LED light source **308** may be of a single or variety of colors as desired by an individual. Alternatively, adjacent strip LED light sources **308** may be electrically coupled to each other in a parallel or series electrical connection for communication to a centrally located controller and power source.

[**0247**] The individual LED light sources **306** as incorporated into the array **312** of the strip LED light sources **308** are preferably sturdy and do not fail or separate from a vehicle **300** when exposed to rough operating conditions. It should be further noted that any individual strip of LED light sources **308** may be easily replaced as required. The transparent cover **324** for the strip LED light sources **308** is preferably formed of sturdy and resilient plastic material

which prevents water penetration and/or contamination to the circuit board **310** and/or individual light sources **306**. Each individual LED light source **306** preferably provides an energy light output of between 20 and 200 or more lumens as desired by an individual.

[**0248**] The strip LED light sources **308** may individually be any size as preferred by an individual. It is anticipated that the strip LED light sources **308** may have the approximate dimensions of three inches in length, three inches in width, and one-half inch in thickness for use in affixation to the exterior of an emergency vehicle **300**.

[**0249**] It should be noted, however, that any desired size of strip LED light sources **308** may be selected by an individual for use in association with the exterior of the emergency vehicle **300** including the use of a series of solitary light sources **306**.

[**0250**] Referring to **FIG. 35, a** panel **304** of individual LED light sources **306** is depicted. The panel **304** may form the illumination element for the strip of LED light sources **308** and/or light bar **70** or light support **12, 302** as affixed to an emergency vehicle **300**. Each panel **304** preferably contains a plurality of rows **34** and columns **32, 328** of individual LED light sources **306**. The panels **304** are preferably in electrical communication with the controller **50** and power supply (now shown). The panels **304** preferably are controlled individually to create a desired warning light signal for an emergency vehicle **300** such as rotation, alternating, pulsating, sequencing, oscillation, modulated strobe, or flashing as preferred by an individual. Each panel **304** may be controlled as part of an overall warning light signal or pattern where individual panels **304** may be illuminated to provide the appearance of rotation and/or oscillation motion through the use of a modulated power intensity light source without the use of mechanical devices.

[**0251**] It should also be noted that the strip LED light sources **308** may be organized into distinct sections, segments, and/or sectors **326** for individual illumination by the controller **50**. Each distinct segment, section, and/or sector **326** may therefore be illuminated with a visually different and distinct type of light signal with, or without, modulated or variable power intensity for the creation of a desired type of unique warning lighting effect for a vehicle. An infinite variety of color and/or pattern combinations or sequences may be established for the emergency vehicle **300** through the use of the controller **50**.

[**0252**] Modulated power intensity may be regulated by the controller **50** to create the appearance of rotation or pulsation within a single panel **304**, strip **308**, or in conjunction with multiple separated or adjacent panels **304** or strips **308** for the provision of a composite warning light signal as desired by an individual. The warning light signal for each or a group of panels **304** or strips **308** may also be regulated by the controller **50** for the provision of a modulated power intensity for an observable warning light signal. All individual LED light sources **306** within a panel **304** or strip **308** may also be exposed to incrementally increased modulated power intensity to provide for an incremental increase in illumination for a warning light signal. The modulation of the power intensity of LED light sources **306** within panel **304** or strips **308** thereby may provide the appearance of rotation of a light signal when observed by an individual. The power modulation or light intensity curve is anticipated to resemble a sine wave pattern when the warning light signal provides the appearance of rotation (**FIG. 43**). The power to the individual light sources **306** may then be incrementally decreased at the preference of an individual. It should be noted that the power is not required to be terminated. It should also be noted that each individual LED light source **306** is not required to receive the same level of power output from the controller **50**. Therefore different individual LED light sources **306** may receive different power output levels within a single warning light signal. Individual LED light sources **306** within panel **304** are not required to be simultaneously and incrementally illuminated to provide for the appearance of rotation. It is anticipated that a pulsating and/or modulated variable light intensity may be provided by the controller **50** for regulation of the power output from thirty percent to maximum and back to thirty percent which affords a desirable type of pulsating modulated variable light effect.

[**0253**] The provision of a modulated power intensity to the panels **304** may also be coupled with or in combination to the sequential illumination of columns **328** as earlier described. In this situation, the warning light signal may initially be dim or off as the individual columns **328** are sequentially illuminated and extinguished for illumination of an adjacent column or columns **328**. The power intensity for the illuminated column or columns **328** may simultaneously be incrementally increased for a combination unique rotational and pulsating modulated light signal. In addition, the controller **50** may be programmed to provide the appearance of rotation pulsation and/or oscillation at the discretion of an individual.

[**0254**] It should be noted that the provision of a modulated light or power intensity may be implemented in association with a light bar or light support **302**, a cylindrical panel, a strip of lights **308**, flat panels **304**, or any other type of light source as desired by an individual for use with an emergency vehicle **300**.

[**0255**] Referring to **FIGS. 48 and 49**, an individual LED light source **306** is depicted in detail. The LED light source **306** preferably include a ceramic and/or heat resistant base **334**. Centrally within the ceramic and heat-resistant base **334** is positioned a light source **336**. The light source **336** is preferably enclosed within a protective cover **338**. Extending outwardly from the individual light source **306** are a pair of contact paddles **340** which preferably provide for the electrical contacts for illumination of the light sources **336** during use of the individual light sources **306**. The back of the LED light source **306** includes a slug **342**. The slug **342** is designed to be positioned within circular openings **344** of a circuit board or LED mounting surface **346** (**FIG. 36**). The circuit board or LED mounting surface **346** preferably establishes a heat sink within an aluminum base or frame **348** as depicted in **FIGS. 38 and 39**. The LED light sources **306** as depicted in **FIGS. 48 and 49** preferably provide for a light intensity varying between 20 and 200 lumens or higher at the discretion of an individual. The positioning of the slug **342** in the circular openings **344** of the circuit board or LED mounting surface **346** also preferably establishes a heat sink. A heat sink is desirable because the individual LED light sources **306** may have a sufficient level of power output during use to develop heat. As a result, the slugs **342** are positioned within the circular opening **344** and may be fully engaged to an adhesive for affixation to an aluminum

base **349** (**FIGS. 38 and 39**). This combination assists in the dissipation of heat during use of the individual LED light sources **306** enhancing the performance of the light support **302**.

[**0256**] As may be seen in **FIGS. 31, 32, 37** and **50**, in an alternative embodiment, the light bar or light support **302** or panel **304** may be formed of a single row of LED light sources **306**. Within this embodiment, the LED light sources **306** are positioned within circular openings **344** of circuit board or LED mounting surface **346** (**FIG. 37**). Circuit board **346** may be affixed to aluminum base **348** through the use of adhesive including glass beads where the circular openings **344** preferably establish a heat sink for the individual LED light sources **306**. The use of adhesive including glass beads to affix the LED light sources **306** and circuit board **346** to the aluminum base **348** preferably assists in the creation of electrical contact for the light bar or light support **302**.

[**0257**] As depicted in **FIG. 37** the top surface of the circuit board or LED mounting surface **346** may include two reflectors or mirrors **350**. The reflectors or mirrors **350** are preferably elongate and are positioned substantially parallel to each other and are adjacent or aligned to the rows of individual LED's **306**. The reflectors or mirrors **350** preferably diverge upwardly and outwardly from a position proximate to the LED light source **306** and aluminum base **348**. As such, the mirrors **350** have a separation distance which is narrow proximate to the LED light sources **306**, where the separation distance becomes larger as the distance vertically from the aluminum base **348** increases.

[**0258**] As earlier described, the brightest or most intense light of the individual LED light sources **306** is provided at an acute angle of approximately 40° to 42°. The reflector or mirror **350** as angled upwardly and outwardly relative to the row of LED light sources **306** reflects light exiting the LED light sources **306** along a desired line of sight which corresponds to perpendicular observation by an individual. The reflectors or mirrors **350** maximize the efficiency of the light sources **306** by reflecting light along the line of sight to be observed by an individual during an emergency situation. The reflectors or mirrors **350** may have a polished or non-polished surface at the preference of an individual depending on the brightness desired for the light support **302**. The reflectors or mirrors **350** may also include one or more reflective sections **374** and/or transparent or clear sections **372**. The transparent or clear sections **372** and the reflective sections **374** are described in detail with reference to FIGS. **27-30** herein. It should be noted that the surface of the reflectors or mirrors **350** may include any desired combination of sections, patterns, stripes, rows, and/or columns of clear or transparent sections **372** and/or reflective sections **374** as desired by an individual for a reflection of light illuminated from the individual LED light sources **306** during the provision of a warning light signal.

[**0259**] Wires **354** preferably connect the circuit board **346** to the power supply and controller **50**. A modulated power source as earlier described may thereby be provided to the light support **302** which includes the reflector or mirrors **350**. In this embodiment, the sequential illumination of individual LED's **306** may occur to provide a desired type of warning light signal. Also, the circuit board **346** as engaged to the base **348** may be separated into segments **326** of LED light sources **306** for use in combination with a modulated power intensity electrical source.

[**0260**] As depicted in **FIGS. 38 and 39**, the frame **348** includes a base **349**. The base **349** may include a holding cavity **358**. In the holding cavity **358** is preferably positioned a circuit board or LED mounting surface **360** which includes a plurality of circular openings **344**. In each circular opening **344**, is preferably positioned an individual LED light source **306**. Above the holding cavity **358** is preferably a first support **362** and a second support **363**. The first support **362** and second support **363** preferably have an angled interior edge **364**. Each angled interior edge **364** is preferably adapted to receive a reflector or mirror **350**. Each mirror **350** is preferably utilized to reflect light illuminated from an individual light source **306** along a visual line of sight as depicted by arrow AA of **FIG. 39**. The first and second supports **362, 363** also preferably include a positioning ledge or notch **366** which is adapted to receive a glass or transparent plastic cover lens **368** which serves as a protector for the frame **348** and individual LED light sources **306**.

[**0261**] Referring to **FIG. 50**, the frame **348** may be elongate having a first end **380** and a second end (not shown). The first end **380** and the second end preferably each include and affixation area **382** which may be threaded for receiving engagement to a fastener **384** as preferred by an individual. A bracket **386** may be rotatably engaged to the first end **380** and second end at the preference of an individual by tightening of the fasteners **384** relative to the affixation areas **382**. The bracket **386** preferably includes and angled portion **388** which may include a second fastener **390** which may include suction cups. Alternatively, the second fastener **390** may be screws, bolts, and/or rivets for attachment of the frame **348** at a desired location relative to the interior or exterior of a vehicle **300**.

[**0262**] Referring to FIGS. **26-30**, a reflector or cullminator for the individual LED light sources **306** is disclosed. The reflector or cullminator is indicated in general by the numeral **370**. The reflector or cullminator **370** may be conical in shape and may be configured to encircle an individual LED light source **306**. The reflector or cullminator **370** may be partially transparent. The reflectors **370** may have a clear section **372** and a reflective section **374**. In **FIG. 29**, the clear section **372** is preferably positioned proximate to the LED light source **306** and the reflective section **374** is preferably positioned to the top of the reflector **370**.

[**0263**] In **FIG. 28**, the reflective section **374** is preferably positioned proximate to the LED light source **306** and the clear section **372** is preferably positioned to the top of reflector or cullminator **370**. As may be seen in **FIG. 30**, the entire interior surface of the reflector or cullminator **370** may be formed of a reflective section **374**. It should be noted that any combination of clear sections **372** and reflective sections **374** may be utilized at the discretion of an individual. It should be noted that a plurality of clear sections **374** may be utilized within each reflector or cullminator **370** at the discretion of an individual.

[**0264**] The use of a combination of clear sections **372** and reflective sections **374** enable an individual to select a configuration for the provision of partial illumination along an angle which is not parallel to a desired line of sight. An individual may thereby be able to observe an illuminated

light signal from the side or top of a light bar or light support **302** as opposed to being aligned with a desired line of sight.

[**0265**] Each of the cullminator or reflector cup **370** preferably includes an angled interior surface which extends upwardly and diverges outwardly from a central opening **394**. Each central opening **394** is preferably constructed and adapted for positioning approximate to and over an LED light source **306**. Each of the cullminator or reflector cups **370** also preferably includes an angled exterior surface which extends upwardly and diverges outwardly from a bottom or base which is preferably positioned approximate to an LED mounting surface or circuit board **346**.

[**0266**] Referring to **FIG. 26** an array of cullminator cups or reflectors **270** may be formed into a cullminator assembly or array **392**. The cullminator assembly or array **392** is preferably adapted for positioning over an array of LED light sources **306**. Examples of arrays of LED light sources **306** which may be utilized with a cullminator assembly **392** are depicted in FIGS. **3-10, 12, 14, 15, 23-25, 31, 32, 34, 35, 37, 39, 40, 44**, and **47**.

[**0267**] Each cullminator array **392** is preferably formed of a reflective material which has plurality of reflective cups **370** disposed there through. Each opening **394** is adapted for positioning over an LED light source **306**. The cullminator array **392** preferably has a sufficient thickness to establish an interior reflective surface having a sufficient dimension to reflect light as emitted from the LED light sources **306**. Alternatively, the interior surface of each reflector cup **370** may be entirely or partially coated with reflective material at the discretion of an individual. It should be noted that the entire cullminator assembly **392** is not required to be formed of reflective material if the interior surface of the reflector cups **370** are coated with reflective material.

[**0268**] The cullminator array **392** may be formed in any shape as desired by an individual including but not necessarily limited to square, rectangular, triangular, linear, circular, oval, and special or other irregular shapes for use in reflecting light emitted from an LED light source **306**. The interior surface of any desired number of cullminator cups **370** may also be coated with reflective **374** and non-reflective **372** sections as earlier described.

[**0269**] It should be noted that the strip LED light source **308** and LED light sources **306** in frame **348** are preferably designed to operate on a 12 volt power supply which is available in a standard emergency vehicle battery. It should also be noted that the frame **348** and strip LED light source **308** are preferably enclosed in a waterproof protector to minimize the risk of contamination or failure from any exposure to moisture or dust or dirt. The use of the strip LED light sources **308** and frame **348** preferably minimize the necessity to modify the exterior of an emergency vehicle **300** through the placement of holes or other apertures. In these embodiments, the wires **354** and **316** may be adhesively secured to the exterior of a vehicle for entry into the power source and controller **50** at a common location.

[**0270**] It should be noted that the strip LED light source **308** may be used on other devices and are not necessarily limited to use on an emergency vehicle **300**. It is anticipated that the strip LED light sources **308** may be used on a variety of apparatus including but not limited to snowmobiles, water craft, helmets, airplanes, or any other device which may accept use of an LED light source.

[**0271**] In FIGS. **40-43** a warning signal light **400** is depicted which in general includes a light source **402** and a rotatable reflector **404**. The light source **402** may include one or more individual LED illumination devices **406**. The light source **402** may include a base **408** which may be mounted on a post **410**. The light source **402** may either be stationary or rotate at the preference of an individual.

[**0272**] A motor **412** is preferably electrically connected to a power supply for rotation of a wheel or gear **414**. The wheel or gear **414** is connected to the motor **412** by a shaft **416**. The wheel or gear **414** is in contact with, or is engaged to, a rotatable collar **418** which may be adapted to rotate freely about the post **410** during operation of the motor **412**. The wheel or gear **414** may be formed of rubber material or any other desired material as preferred by an individual. Alternatively, the wheel **414** may include teeth and function as a gear for engagement to corresponding grooves and teeth as integral to the exterior surface of the collar **418**.

[**0273**] An aperture **420** may pass through post **410** to receive wires **422** for the provision of power to LED light source **402**. A washer or support device **424** vertically supports rotatable collar **418** on post **410** from a position below collar **418**. A positioner **426** functions to restrict the vertical movement of the collar **418** upwardly during engagement of the motor **412** and rotation of the wheel **414** and collar **418**.

[**0274**] A horizontal support arm **428** extends outwardly from collar **418**. A vertical support arm **430** extends upwardly form horizontal support arm **428**. Angular support arm **432** extends inwardly and upwardly from vertical support arm **430** for positioning of a reflector or mirror **434** above light source **402**. The reflector or mirror **434** is preferably positioned at an approximate angle of forty-five degrees relative to the light source **402**. Light as emitted vertically from the light source **402** may then reflect from the reflector **434** along a substantially perpendicular line of visual sight. The reflector **434** rotated ninety degrees is depicted in phantom line as an oval due to the angular offset of approximately forty-five degrees.

[**0275**] The use of motor **412** rotates wheel **414** which in turn rotates collar **418** and reflector **434** in a circular direction about light source **402** for the provision of an observed rotational warning light source. In addition, the light source **402** may be electrically coupled to a controller **50** to provide a modulated, alternating, variable, pulsating, or oscillating light source at the preference of an individual simultaneously to the rotation of the reflector **434** about light source **402**.

[**0276**] Referring to **FIG. 41** the warning signal light **400** includes a light source **402** which is rotatable in conjunction with the reflector **434**. In this embodiment the motor **412** is connected to a first gear which is enclosed within casing **436**. A second gear is also enclosed within casing **436** and is coupled to the first gear for rotation of the reflector **434**. A vertical rod **438** is preferably affixed or integral to the second gear. The vertical rod **438** supports the LED light source **402** as positioned adjacent to reflector **434**. An angled brace **440** is also preferably engaged to rod **438**. Angled brace **440** supports reflector **434** during rotation of reflector **434** which represents a circular motion as depicted by arrow **442**. In this embodiment reflector **434** is arcuate in shape and may be parabolic at the discretion of an individual. Light

emitted from light source **402** may then be reflected by the arcuate reflector **434** along a desired line of sight. The engagement of the motor **412** rotates the light source **402** and reflector **434** to provide a rotational light source as observed by an individual. It should also be noted that the light source **402** may be coupled to a controller **50** to provide for a modulated, alternating variable, and/or pulsating light signal in conjunction with the rotation of the reflector **434**.

[**0277**] Referring to **FIG. 42**, the reflector **434** is not required to be flat and may include a convex or concave face **444**. The provision of a convex or concave face **444**, is utilized to assist in the creation of a unique variable light effect as observed by an individual. Light as emitted from the light source **402** may then be reflected at any desired angle other than perpendicular for observation by an individual. The pulsating intensity of the light as observed by an individual may then be unique, especially when used in conjunction with the rotated reflector **434** and variable or modulated power intensity from the controller **50**. In addition, the use of a convex or concave reflector **444** may expand or enhance the observation of the warning signal light **400** by individuals beyond a perpendicular line of sight. The warning signal light **400** may then be observed above or below a light source **402**. The reflector **434** as rotated ninety degrees is depicted in phantom line and is generally oblong or oval in shape.

[**0278**] **FIG. 43** represents graphically the variable or pulsating illumination of the observed light as reflected from the reflector **434** of **FIG. 42**. Time is represented along the x-axis and increasing brightness is depicted along the y-axis. The graph of **FIG. 43** shows the gradual increase in brightness of the observed light as the reflector **434** is rotated to a maximum illumination corresponding to direct in line observation of the warning light signal and then the gradual decrease in observed light intensity as the reflector **434** is rotated away from direct in line sight. It should be noted that the observed warning light signal is not required to be extinguished and may be reduced to a minimum observable intensity of approximately thirty percent.

[**0279**] Referring to **FIG. 44**, the warning signal light **400** in general includes a light source **402** which may be rotated through the use of a motor **412** for transmission of light through a filter **446** for reflection from a conical reflector **448** as mounted to the interior of a light bar or light support **450**.

[**0280**] Power for motor **412** is supplied through wires **452** from a power source not shown. Power for the light sources **402** is provided through wires **454** in support **456**. Brushes **458** may be in electrical communication with the power from the wires **454** to transmit electrical current to a second set of brushes **460** utilized to communicate power to the light sources **402**. The base **462** of the light source **402** may preferably be formed of an electrically conductive material to facilitate the provision of power to the light sources **402**.

[**0281**] A shaft **464** preferably extends between the motor **412** and the base **462** where operation of the motor **412** rotates the shaft **464** and the base **462** having the light sources **402**. Light is transmitted vertically upward from the light sources **402** through the filter **446**. (**FIGS. 44 and 45**.) The filter **446** may include one or more sections of tinted material **466**. The filter **446** may be stationary or may be rotatable at the discretion of an individual. The tinted material **466** may be any color as desired by an individual or opaque to establish a desired illumination effect for an emergency warning signal light. Any number of tinted sections **466** or transparent areas may be placed on the filter **446**. The filter **446** may be formed of glass or plastic or other sturdy material at the preference of an individual. The tinted sections **466** may be integral to or placed upon the filter **446** as desired. The filter **446** may be attached to the conical reflector **448** by a fastener **468**.

[**0282**] The conical reflector **448** preferably includes a straight reflective edge **470**. Alternatively, the reflective edge **470** may be concave or convex as desired by an individual to establish a unique lighting effect. The conical reflector **448** is preferably affixed to and descends from the top of a light bar or light support **450** as may be attached to an emergency vehicle **300**.

[**0283**] Light transmitted upwardly from the light sources **402** passes through either a substantially transparent section or through the tinted or opaque material **466** which may block light transmission or alter the color of the light as desired. Light is then reflected from the conical reflector **448** at a desired angle for transmission through the vertical sections of the light bar or light support **450** for observation by an individual.

[**0284**] **FIG. 46** represents graphically the intensity of the observed light as reflected from the conical reflector **448** of **FIG. 44**. Time is represented along the x-axis and observed brightness is represented along the y-axis. The observed light signal transmitted from the warning signal light of **FIG. 44** is much steeper which corresponds to a shorter period of observation more similar to a flashing light signal. It should be noted that the light sources may also be coupled to a controller **50** for the provision of a variable, modulated and/or pulsating light effect.

[**0285**] Referring to **FIGS. 31 and 32** a modular light support **480** in general includes an LED mounting surface **482** having one or more LED light sources **306**, a cullminator assembly **484** and a cover **324**.

[**0286**] The LED mounting surface **482** is preferably elongate and includes a plurality of LED light sources **306**. In general, one to five LED light sources **306** are disposed in a linear orientation along the LED mounting surface **482** which may be a circuit board as earlier described. The LED mounting surface **482** also preferably includes a first end **486** and a second end **488**. An opening **490** is preferably positioned through the LED mounting surface **482** proximate to each of the first end **486** and second end **488**.

[**0287**] The cullminator assembly **484** preferably includes a plurality of reflector cup areas **492**. The cullminator assembly **484** preferably includes a plurality of support walls **494** and a top surface **496**. The cullminator assembly **484** preferably includes a plurality of openings **490**. Each of the openings **490** is preferably sized to receivingly position and hold the individual LED light source **306** during assembly of the modular light support **480**. The reflector cup areas **492** are preferably equally spaced along the cullminator **484** to correspond to the spacing between the individual light sources **306** as disposed on the LED mounting surface **482**.

[**0288**] The cover **324** is preferably transparent permitting transmission of light emitted from the LED light supports **306** therethrough. The cover **324** preferably includes a forward face **498**, a pair of end faces **500**, a top face **502** and

a bottom face **504**. Each of the pair of end faces **500** preferably includes a receiving notch **506** which is adapted to receivingly engage the LED light mounting surface **482** during assembly of the modular light support **480**. An affixation opening **508** preferably traverses the forward face **498** proximate to each of the pair of end faces **500**. A fastener **510** preferably passes through the affixation opening **508** for engagement to the opening **490** to secure the LED mounting surface **482** into the receiving notch **506**. It should be noted that the cullminator assembly **484** is then positioned within the interior of the cover **324** where the top surface **496** is proximate to the forward face **498**. The illumination of the LED light sources **306** then transmits light through the forward face **498** for observation of an emergency warning light signal.

[**0289**] Specifically referring to **FIG. 32** one or more modular light support **480** may be positioned adjacent to each other for the creation of a light bar or light stick **512**. The modular light supports **480** and/or light bar or light stick **512** may be coupled to a controller **50** which may independently and/or in combination provide a plurality of independent and visually distinct warning light signals as earlier described. In addition, the controller **50** may provide modulated and/or variable power intensity to the individual LED light sources **306** to establish unique warning light signal effects. It should also be noted that the controller **50** may individually illuminate LED light sources **306** to provide for one or a combination of colored light signals as desired by an individual.

[**0290**] Any number of modular light supports **480** may be positioned adjacent to each other to comprise a light bar or light stick **512** at the preference of an individual. It should be further noted that a plurality of modular light supports **480** may be positioned at any location about the exterior or within the interior of a vehicle at the discretion of an individual. In one embodiment each of the individual modular light supports **480** will be electrically coupled to a power supply and controller for the provision of unique individual and visually distinctive warning light signals and combination warning light signals as earlier described

[**0291**] Referring to **FIG. 47** and alterative embodiment of a reflector assembly is disclosed. In general, the reflector assembly of **FIG. 47** includes an enclosure **518**. Positioned within the interior of enclosed **518** is preferably a motor **520** having a shaft **522** and a gear **524**. A first support **526** preferably has a periphery having a plurality of teeth **528** adapted to releasably engage the gear **524**. The first support **526** preferably includes a mirror bridge **530** which is preferably used to position a mirror **532** and a proximate angle of 45° relative to a LED light source **306**. Preferably within the interior of the first support **526** is located a cullminator assembly **534** which may include one or more reflective cups as earlier described. Individual LED light sources **306** are preferably positioned within each of the cullminator cups of the cullminator assembly **534** to maximize the direction of emitted light for reflection from the mirror **542**.

[**0292**] On the opposite side of gear **524** is located second support **536**. Second support **536** also includes a periphery having a plurality of teeth **528**, a mirror bridge **530**, a mirror **532**, and a cullminator assembly **534** disposed adjacent to a plurality of individual LED light sources **306**.

[**0293**] A third support **538** is preferably adjacent to the second support **536**. The third support **538** also preferably includes a periphery having a plurality of teeth **528**, a mirror bridge **530**, and a mirror **532** disposed at a 45° angle above a cullminator assembly **534**. A plurality of individual LED light sources **306** are preferably disposed within the reflector cups of the cullminator assembly **534**. It should be noted that the teeth **528** of the third support **538** and second support **536** are preferably coupled so that rotational motion provided to the second support **536** by the gear **524** is transferred into rotational motion of the third support **538**.

[**0294**] In operation, the individual LED light sources **306** are preferably connected to a power source and/or a controller **50** as earlier described. The controller **50** may provide for any type of unique lighting effect including modulated or variable power intensity as earlier described. An infinite number of independent visually distinctive warning light signals may be provided for the rotational reflector as depicted in **487**. It should also be noted that an infinite number of warning light signal combinations may also be provided by the controller **50** for use with the rotational reflector of **FIG. 47**.

[**0295**] Each of the mirrors **542** may be positioned for reflection and transmission of light to a desired field of vision relative to the rotational reflector. A flashing and/or rotational light source may be provided for observation by an individual.

[**0296**] It should be noted that the first support **526**, second support **546**, and third support **538** may be synchronized to provide for a unique warning signal light for observation by an individual. It should be further noted that the engagement of the motor **520** for rotation of the gear **524** simultaneously rotates the first support **526**, second support **536** and third support **538** for the provision of a warning light signal.

[**0297**] LED technology enables the selection of a desired wave length for transmission of light energy from the individual LED light sources **306**. Any wave length of visible or non-visible light is available for transmission from the LED light sources **306**. As such, generally no filters are required for use with individual LED light sources **306**. The individual LED light sources **306** may be selected to provide for any desired color normally associated with the use in emergency vehicles such as amber, red, yellow, blue, green and/or white.

[**0298**] It should be further noted that the controller **50** may simultaneously display any number of combinations of warning light signals. For example, the controller **50** may provide for a solitary light signal for transmission from a light source. Alternatively, the controller **50** may effect the transmission of two signals simultaneously from the identical light source where a first warning light signal is emitted from one portion of the light source and a second warning light signal is emitted from a second portion of the light source. Alternatively, the controller **50** may alternate the two warning light signals where the first area of the light source first transmits a first warning light signal and secondly transmits a second warning light signal. The second area of the light source initially transmits the second warning light signal and then transmits the first warning light signal. Further, the controller may transmit two independent and visually distinct warning light signals simultaneously within different areas of light source. The controller **50** may also reverse the warning light signals for simultaneous transmission between different areas of the light source. Further, the

controller **50** may regulate the transmission of more than two visually distinct types of warning light signals from a light source at any given moment. The controller **50** may alternate warning light signals within different areas or enable transmission of warning light signals in reverse alternating order for the creation of an infinite variety of patterns of visually distinct warning light signals for use within an emergency situation. The controller **50** may also permit the transmission of a repetitive pattern of warning light signals or a random pattern of visually distinct warning light signals at the preference of an individual.

[**0299**] The present invention may be embodied in other specific forms without departing from the spirit or essential attributes thereof, and it is, therefore, desired that the present embodiment be considered in all respects as illustrative and not restrictive, reference being made to the appended claims rather than to the foregoing description to indicate the scope of the invention.

What is claimed is:

1. A light emitting diode reflector assembly comprising:

a) a base having a plurality of light emitting diodes, said light emitting diodes receiving power from a power source;

b) a reflector positioned proximate to said light emitting diodes, said reflector constructed for reflecting light emitted from said light emitting diodes for the provision of a warning light signal; and

c) A motor connected to said reflector, said motor moving said reflector relative to said light emitting diodes.

2. The light emitting diode reflector assembly according to claim 1, said base further comprising a collar, said collar having a reflector support positioning said reflector above said light emitting diodes,

3. The light emitting diode reflector assembly according to claim 2, further comprising a first gear engaged to said motor, said first gear being further engaged to said collar imparting motion to said reflector relative to said light emitting diodes.

4. The light emitting diode reflector assembly according to claim 2, wherein said light emitting diode assembly is integral to a vehicle.

5. The light emitting diode reflector assembly according to claim 2, wherein said motion of said reflector is rotational.

6. The light emitting diode reflector assembly according to claim 2, wherein said motion of said reflector is oscillatory.

7. The light emitting diode reflector assembly according to claim 2, further comprising a filter positioned between said reflector and said light emitting diodes.

8. The light emitting diode reflector assembly according to claim 2, further comprising a culminator positioned adjacent to at least one of said light emitting diodes.

9. The light emitting diode reflector assembly according to claim 2, further comprising a controller in communication with said light emitting diodes, said controller selectively illuminating said light emitting diodes for the provision of a plurality of visually distinct warning light signals.

10. The light emitting diode reflector assembly according to claim 2, said plurality of light emitting diodes comprising light emitting diodes of at least two different colors.

11. The light emitting diode reflector assembly according to claim 10, further comprising a controller selectively activating the light emitting diodes to create at least one of a single colored warning light signal and at least one of a multi-colored warning light signal.

12. The light emitting diode reflector assembly according to claim 2, wherein the warning light signal is selected from the group consisting of: a revolving light, an oscillating light, a flashing light, a stroboscopic light, a pulsating light, a modulating light, an alternating light, and any combinations thereof.

13. The light emitting diode reflector assembly according to claim 10, where the plurality of light emitting diodes are selectively illuminated to create the appearance of multi-colored rotation.

14. The light emitting diode reflection assembly according to claim 2, further comprising a controller selectively activating and simultaneously displaying light emitting diodes to create a plurality of visually distinctive warning light signals.

15. The light emitting diode reflector assembly according to claim 2, wherein said reflector assembly is engaged to a utility vehicle.

16. The light emitting diode reflector assembly according to claim 2, wherein said reflector assembly is engaged to an emergency vehicle.

17. The light emitting diode reflector assembly according to claim 2, wherein more than two different types of visually distinct warning light signals are produced simultaneously.

18. The light emitting diode reflector assembly according to claim 2, wherein more than two different types of visually distinct warning light signals are produced independently of one another.

19. The light emitting diode reflector assembly according to claim 2, wherein more than two different types of visually distinct warning light signals are produced in at least one combination.

20. The light emitting diode reflector assembly according to claim 2, further comprising a controller for the provision of modulated light intensity to said light emitting diodes.

21. The light emitting diode reflector assembly according to claim 2, wherein said reflector has a flat surface.

22. The light emitting diode reflector assembly according to claim 2, wherein said reflector has a concave surface.

23. The light emitting diode reflector assembly according to claim 2, wherein said reflector has a convex surface.

24. The light emitting diode reflector assembly according to claim 2, wherein said reflector has a parabolic surface.

25. The light emitting diode reflector assembly according to claim 2, wherein said reflector is positioned at an angle of approximately 45° relative to said light emitting diodes.

26. The light emitting diode reflector assembly according to claim 3, said motor comprising a post, said base comprising an arm engaged to said post, where said base is movable about said post.

27. The light emitting diode reflector assembly according to claim 3, further comprising a plurality of light emitting diode reflector assemblies positioned adjacent to each other.

28. The light emitting diode reflector assembly according to claim 26, further comprising a cover positioned over said reflector, said base, and said light emitting diodes, said cover protecting said reflector and said light emitting diodes from damage.

29. The light emitting diode reflector assembly according to claim 27, wherein said plurality of reflectors are engaged to each other whereby motion of one reflector transfers motion to another reflector.

30. The light emitting diode reflector assembly according to claim 27, wherein said plurality of reflectors are synchronized for motion relative to each other and to said light emitting diodes.

31. The light emitting diode reflection assembly according to claim 8, wherein said culminator is conical.

32. A light emitting diode reflector assembly comprising:

a) a base having a plurality of light emitting diodes, said light emitting diodes receiving power from a power source;

b) a reflector attached and positioned proximate to said base; and

c) a motor connected to said reflector and to said base, said motor moving said reflector and said base for the provision of a warning light signal.

* * * * *