UNITED STATES PATENT AND TRADEMARK OFFICE

_____

BEFORE THE PATENT TRIAL AND APPEAL BOARD

_____

PORSCHE CARS NORTH AMERICA, INC.,
Petitioner,

v.

YECHEZKAL EVAN SPERO
Patent Owner.

_____

U.S. Patent No. 9,955,551 to Spero

Case No.: IPR2023-01225

_____

PATENT OWNER'S PRELIMINARY RESPONSE TO PETITION FOR *INTER PARTES* REVIEW UNDER 37 C.F.R. § 42.107

TABLE OF CONTENTS

Table of Authorities iv

List of Exhibits vi

I. Introduction 2

II. Overview of the '551 Patent - The Claimed Invention is Directed to an Adaptive Multi-LED Headlight System with Finely Controlled Light Delivery 5

III. Level of Ordinary Skill 11

IV. Claim Construction 11

V. The Applied References 11

- A. Beam 11
- B. Satonaka 18
- C. Karlsson 23
- D. Nakamura 28

VI. The Board Should Deny Institution on Procedural Grounds 28

- A. The Petition Lacks Particularity under 35 U.S.C. § 312(a)(3) 29
  - 1. The Petition Does Not Specify Where Each Claim Element is Found in the Prior Art 31
  - 2. The Petition Does Not Identify Grounds with Particularity 32
    - a. Lumping Anticipation and Obviousness Grounds 32
    - b. Lumping Alternative Teachings 34
- B. Petitioner's Parallel Petitions Raise Fairness, Timing, and Efficiency concerns under § 316(b) 37

VII. Institution Should Be Denied Because No Ground Has a Reasonable Likelihood of Success 40

- A. Person of Ordinary Skill in the Art Would Not Have Been Motivated to Combine Beam and Satonaka or Karlsson and Nakamura 41
  - 1. Petitioner's Rationale for Combining References is Undermined by the References Themselves, at Least One Reference Teaches Away From the Combination 41

a. Ground 1: Petitioner's Rationale for Combining Beam with Satonaka's Remote Camera Teaching Undermines, and Teaches Away from, Petitioner's Very Reason for the Combination: Ensuring Tracking Accuracy41
b. Ground 3: Petitioner's Rationale for Combining Karlsson with Nakamura's Remote Camera Teaching Undermines, and Teaches Away from, Petitioner's Very Reason for the Combination: Accurately Identifying Traffic 45
2. Petitioner's Rationale for Combining References Renders the Primary Reference Inoperable and Unsatisfactory for Its Intended Purpose.....49
a. Ground 1: Petitioner's Combination Renders Beam Inoperable and Unsatisfactory for Its Intended Purpose of Ensuring Tracking Accuracy 49
b. Ground 3: Petitioner's Combination Renders Karlsson Inoperable and Unsatisfactory for Its Intended Purpose of Minimizing Alignment Operations and Additional Cost 50
3. Petitioner Does Not Explain How a POSITA Would Have Combined the Prior Art 51
a. Ground 1: Petitioner Does Not Explain How a POSITA Would Have Combined Beam's Co-located Sensor with Satonaka's Remote Sensor Based Image Processing 51
b. Ground 3: Petitioner Does Not Explain How a POSITA Would Have Combined Karlsson's Internal Sensors with Nakamura's Remote Sensor Based Image Processing 54
4. Petitioner Fails to Explain Why the References Would Have Been Combined; the Rationale to Combine Suffers from Hindsight Bias 58
a. Ground 1: Petitioner's Combination of Beam and Satonaka is Based on Impermissible Hindsight By "Adding" Features Already Present in Beam 59
b. Ground 3: Petitioner's Combination of Karlsson and Nakamura is Based on Impermissible

Hindsight By "Adding" Features Already Present in Karlsson 60

B. Petitioner's Combination of References Does Not Teach all Claim Elements 63

1. Ground 3: The Combination Of Karlsson and Nakamura Does Not Teach Claims [24.5]/[32.5]/[40.5]/[48.5] "*one or more sensors, including one or more cameras, placed on the structure for detecting coordinate-specific information about the illuminated area*." 63

VIII. Conclusion 65

Certificate of Service 66

Certificate of Compliance Pursuant to 37 C.F.R. § 42.24 67

Table of Authorities

Cases

Adaptics LTD. v. Perfect Co.,
IPR2018-01596, Paper 20 (PTAB March 6, 2019) (Informative) 30, 37

Adidas AG v. Nike, Inc.,
IPR2016-00922 (October 19, 2017) 51

Arctic Cat Inc. v. Bombardier Recreational Prods. Inc.,
876 F.3d 1350 (Fed. Cir. 2017) 41

Best Med. Int'l, Inc. v. Elekta Inc.,
46 F.4th 1346 (Fed. Cir. 2022) 1

Cuozzo Speed Techs., LLC v. Lee,
136 S.Ct. 2131 (2016).....28

DePuy Spine, Inc. v. Medtronic Sofamor Danek, Inc.,
567 F.3d 1314 (Fed. Cir. 2009) 41, 45, 48

Ex parte Tessier,
Appeal 2012-006616 (PTAB October 2, 2014) 58, 60, 62

Harmonic Inc. v Avid Tech., Inc.,
815 F.3d 1356 (Fed. Cir. 2016) 30

In re Gordon,
733 F.2d 900, 221 USPQ 1125 (Fed. Cir. 1984)..... 49, 50, 51

In re Kahn,
441 F.3d 977, 988 (Fed. Cir. 2006) 41

In re Royka,
490 F.2d 981, 180 USPQ 580 (CCPA 1974) 63, 65

Kinetic Concepts, Inc. v. Smith & Nephew, Inc.,
688 F.3d 1342 (Fed. Cir. 2012) 63

KSR Int'l Co. v. Teleflex Inc.,
550 U.S. 398 (2007) 41, 51

Personal Web Techs., LLC v. Apple, Inc.,
848 F.3d 987 (Fed. Cir. 2017) 51, 54

Sensonics Inc. v. Aerosonic Corp.,
81 F.3d 1566 (Fed. Cir. 1996) 59, 60, 62

Wellman, Inc. v. Eastman Chem. Co.,
642 F.3d 1355 (Fed. Cir. 2011) 11

Statutes

35 U.S.C. § 316 ..... passim

Authorities

Consolidated Trial Practice Guide……....passim

Rules

37 C.F.R. § 42.104 ..... 30, 31

List of Exhibits

Exhibit No.	Description	Identifier
2001	Declaration of Matthew A. Turk, PhD	Turk Decl.
2002	Curriculum Vitae of Matthew A. Turk, PhD	Turk CV
2003	Best Practices and FAQs for Filing Requests for Reexamination Compliant with 37 CFR 1.510 and 1.915, PTAB, May 2010	Best Practices
2004	Petition challenging U.S. Patent No. 9,955,551, Volkswagen Group of America, Inc. v. Yechezkal Evan Spero, IPR2023-00318, Paper 1, December 22, 2022	Petition 2
2005	Petition challenging U.S. Patent No. 9,955,551, Volkswagen Group of America, Inc. v. Yechezkal Evan Spero, IPR2023-00336, Paper 1, December 22, 2022	Petition 3

This Petition is a copycat petition seeking joinder to a case in which institution has already been granted. Patent Owner notes for the panel's convenience that the non-institution arguments in this Preliminary Response essentially repeat the non-institution arguments that were raised in the already-instituted target case. The present Response is nonetheless being filed to protect Patent Owner's rights.

Pursuant to 37 C.F.R. § 42.107, Patent Owner, Yechezkal Evan Spero ("Patent Owner"), submits the following Preliminary Response ("Preliminary Response") to the Petition for *Inter Partes* Review of U.S. Patent No. 9,955,551 ("the '551 Patent"). Patent Owner respectfully requests that the Patent Trial and Appeal Board ("the Board") deny the Petition.

The Petition filed in this joinder matter is accompanied by a motion for joinder (Paper 3) to IPR2023-00315 regarding the same '551 Patent, and is of the sort that has been called a "copycat" petition, for it is nearly identical to the Petition filed in IPR2022-01586. *See, e.g., Best Med. Int'l, Inc. v. Elekta Inc.*, 46 F.4th 1346, 1350 (Fed. Cir. 2022) (discussing "copycat" IPR petition accompanied by motion for joinder). Petitioner explains in its motion for joinder that its Copycat Petition "includes the same grounds based on the same prior art, and challenges the same claims as the VW Petition" (Paper 3 at 1.) Copycat Petitioner's expert, Mr. Scott Andrews, states that he has "read and agree[s] with the opinions offered by

Dr. Jianzhong Jiao in his expert declaration in IPR2023-00315, and herein adopt[s] those opinions as [his] own." (Ex. 1003, ¶21.)

Patent Owner understands that the petition in IPR2023-00315 has already been granted over its POPR arguments. Patent Owner respectfully disagrees with the decision to institute, and respectfully continues to believe institution of this copycat petition should be denied. Because the grounds in this petition are the same as they are in Volkswagen's petition in IPR2023-00315 from which Copycat Petitioner copied, this Petition's grounds fail to support institution for the same reasons that the same grounds in IPR2023-00315 fail to do so. For the panel's convenience in considering this response, Patent Owner notes that, much as the Petition in this case repeats the same grounds as those set forth in its joinder target, the present preliminary response repeats the same reasons and same supporting evidence set forth in Patent Owner's preliminary response in that case, and presents expert testimony and other evidence supporting its response that is the same as the evidence it presented in support of its preliminary response in that case.

I. Introduction

The Petition is a tangled maze of circuitous arguments, disconnected from the claim language. The Petition challenges 32 claims of the '551 Patent with at least four Grounds. But to fit all of these challenges into a single Petition,

Petitioner cut corners and obfuscated seminal issues. Petitioner's arguments are largely detached from the actual language of both the Challenged Claims and the applied references—resulting in arguments that ignore claim limitations, and incomplete proofs. In short, from both a procedural and substantive basis, Petitioner failed to meet its burden.

Procedurally, the Petition should further be denied under 35 U.S.C. §314 because the Petition both: 1) lacks particularity; and 2) fails to justify filing <u>three</u> parallel petitions challenging the '551 Patent. The Petition adopts an extreme word-count preservation strategy of burying the claim limitations in a claim appendix, and listing only claim identifiers in the argument, requiring the reader to embark on a scavenger hunt to find the corresponding claim limitations.

Petitioner lumps alternative grounds and teachings in the argument, resulting in vague, and often factually incorrect, application of the applied references. When unpacked, it becomes clear that Ground 1 is actually a Lumped Ground including three distinct grounds: 1) Ground 1A—an incomplete argument that Beam anticipates the Challenged Claims (Petition at 29.); 2) Ground 1B—"[a]ternatively" the combination of Beam and Satonaka's "software" (Petition at 29.) and 3) Ground 1C - the combination of Beam and Satonaka's hardware (Petition at 20, 28.)

The Petition also similarly advances separate Lumped obviousness Grounds

involving the Karlsson and Nakamura references for each challenged claim: 1) Ground 3A—an incomplete argument that Karlsson anticipates the Challenged Claims (Petition at 63.); 2) Ground 3B—"[a]ternatively" the combination of Karlsson and Nakamura's "software" (Petition at 63.) and 3) Ground 3C - the combination of Karlsson and Nakamura's hardware (Petition at 58.) This leaves the Board and Patent Owner in a position where they must guess at how the Petition is particularly interpreting and applying the references.

On the substantive merits, Petitioner's rationale for combining references: 1) is disparaged or discouraged when the references are considered in their entirety; 2) renders the primary reference unsatisfactory or inoperable; 3) is impermissibly vague regarding how or why the references would be combined; and 4) suffers from significant hindsight bias.

The proffered secondary references are not explained to add anything useful or desirable to the primary references, and are essentially representative of, at best, a different way to achieve the exact same result, except by doing so using teachings that mirror language used in the claims. Petitioner identifies no rational reason to combine the references in the specific way that it alleges, nor any useful result of such a combination, nor any problem such a combination solves. The only apparent "motivation" to combine the references is an attempt to meet the language of the claims.

As a result, all of Petitioner's asserted grounds lack sufficient evidence of obviousness. The gaps in the prior art, filled at best with conclusory positions advocated in the Petition, leave Petitioner without a reasonable likelihood of prevailing as to any Challenged Claim.

For these reasons, and others explained below, the Board should deny Petitioner's Petition for *inter partes* review.

II. Overview of the '551 Patent - The Claimed Invention is Directed to an Adaptive Multi-LED Headlight System with Finely Controlled Light Delivery

The '551 Patent discloses "a novel multi-light source approach to the design and construction of solid-state lighting fixtures (vs. solid state lamps), which is termed a 'Digital Lighting Fixture', due to the control of individual lighting element 'digits' to provide the 'correct' lighting solution for the situation at hand." (Ex. 1001, 11:8-13.) The '551 Patent further explains that "[t]he terminology 'digital' as used herein refers to the discrete nature of the multiple LED lamps provided in the luminaire, whereby, 'digital' control results from the individual control of the discrete, *i.e.*, 'digital' lighting elements, the LEDs, in the luminaire." (*Id*. at 2:65-3:3.)

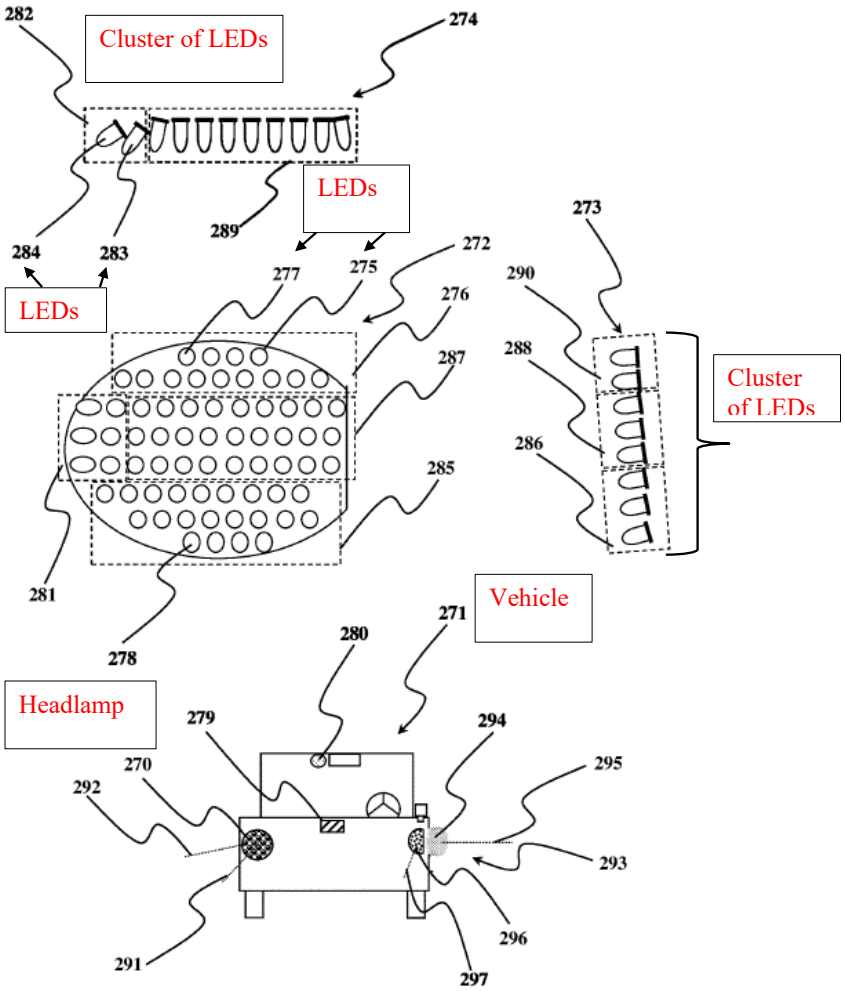

(Ex. 1001, Fig. 15, Annotated)

The ’551 Patent describes “a different approach which is to provide the end user with the most correct lighting solution not a new technology lamp to replace the old one.” (*Id*., 11:5-8.) “In contrast to a prior art, single large, lamp replacement like light source, the present invention provides multiple, small sized sources of differing characteristics such that the effect of the whole is greater than the sum of the individual parts.” (*Id*., 11:45-49.) “The added controllability offered by breaking the total light output up into **<u>discrete (‘digital’) specifically aimable</u>**

<u>and dimmable elements</u> which can be addressed by control electronics to effect intensity, spectrum and spatial distribution of intensity and spectrum, yields a lighting fixture (vs. lamp) of unparalleled performance." (*Id*., 11:56-62, emphasis added.) The '551 patent explains how to use its "digital lighting" in the context of headlamps to "provide the optimal lighting solution in real-time" – whether that be for predictive curve illumination (*Id*., 57:31-37.), to preserve forward illumination while preventing glare (*Id*., 52:54-65.), or both (*Id.*, 53:33-44.)

The Challenged Claims include independent claims 24, 32, 40 and 48. Independent claim 24 is representative and reproduced below with emphasis added:

> 24. An illuminating device having automatic control of light provided to an illuminated area comprising:
>
> a structure for incorporating illuminating device elements, wherein the structure comprises a motor vehicle;
>
> a plurality of individually controllable LEDs incorporated in the structure via at least one headlamp mounted to the structure, each headlamp including at least one of the LEDs, the LEDs in communication with a power source;
>
> electronic circuitry apparatus for the controlled powering of the LEDs and other of the illuminating device elements;
>
> one or more processors;

one or more sensors, including **one or more cameras**, placed on the structure for detecting **coordinate-specific information** about the illuminated area, at least one of said cameras in communication with power, and in communication with at least one of the one or more processors;

a controller, including at least one of the one or more processors, integrated with the structure via mounting, in communication with the LED controlling power electronic circuitry apparatus, said controller arranged to process the information communicated from the cameras and to automatically control the light provided to the illuminated area; and

memory storing instructions that, when executed by one or more processors of the controller, enable the controller to:

determine first coordinates corresponding to an other vehicle, based on the coordinate-specific information;

select a cluster of the LEDs that emit light toward at least a portion of the other vehicle based on the LEDs having emission aimings associated with the first coordinates; and

change emission of the selected cluster of LEDs relative to emission of other LEDs not included in the cluster to create headlamp illumination that preserves a first level of illumination illuminating past the other vehicle while preventing glare to a driver of the other vehicle.

(Ex. 1001, claim 24, emphasis added.)

The ’551 Patent describes a multitude of sensor-based techniques for observing a scene, analyzing a scene, determining varied illumination for a scene, etc. This can include determining what objects are within the scene and what illumination should correlate to those objects (Ex. 1001, 44:36-45:44.) The ’551 Patent notes the general applicability of the varied concepts across embodiments and specifically notes that techniques described elsewhere at least correspond to headlights (*Id*., 52:66-53:4.) The ’551 Patent explains that, by using “digital” headlamps with known light directionality of discrete source elements, such as LEDs, it is possible to “continue to illuminate far ahead (in high beam) without blinding oncoming traffic.” (*Id*., 52:60-61.) This allows for determination of “what exact aiming is the maximum allowable for any given traffic situation and the road layout.” (*Id.*, 52:64-65.)

The ’551 Patent also recognizes that different “objects” may be in the field of view in a variety of lighting situations, and that different light output may be appropriate to accommodate these different objects. (*Id.*, 44:36-45:44.) In the context of headlamps, it can, for example, determine types of objects, e.g., without limitation, whether something is a vehicle or a sign, and respond differently to each object. With regards to a preceding vehicle it may reduce illumination of the vehicle and with regards to a preceding sign it may increase illumination of the sign. It can also make these accommodations at the same time, because of the

discrete nature of the directional light sources – "use the controller and properly aimed SLS to follow and illuminate distant overhead and roadside signs for a longer time, yet not blind oncoming traffic due to the narrow beam." (*Id.*, 53:1-4.) This is a headlamp embodiment employing, among other things, the described notion of "task lighting" – contemplation of varied illumination needs within an illuminated scene.

Thus, the '551 Patent provides a comprehensive solution for the control and use of light, and extends the application to headlamps that can accommodate other traffic without blinding it, predictively illuminate road curvatures, and differentially illuminate objects in a scene based on object recognition. All of this lends itself to the complete headlamp solution contemplated and described – a solution where "[a]t any instant in time the intensity, spectrum and beam pattern of the headlamp may be varied as a function of the drivers intent, lay of the road and environmental factors." (Ex. 1001, 51:49-52.) The marrying of the '551 techniques with the headlamp embodiments results in a headlamp with highly controllable emission elements that, "[w]hen combined with devices capable of detection changes in the surrounding environment the flexible DLF is capable of changing the illumination so as to provide the optimal lighting solution in real-time." (*Id.*, 57:33-37.)

III. Level of Ordinary Skill

A POSITA for the invention claimed in the ’551 Patent, would have had a Master of Science Degree (or a similar technical Master Degree, or higher degree) in an academic area emphasizing electrical engineering, computer engineering, or computer science with experience or education in optics and imaging systems or, alternatively, a Bachelor’s Degree (or higher degree) in an academic area emphasizing electrical, computer engineering or computer science and having two or more years of experience in the field of optical and imaging systems.

IV. Claim Construction

No claim construction is necessary to deny institution because Patent Owner’s arguments for denial do not hinge on the outcome of an actual controversy about claim interpretation. *See Wellman, Inc. v. Eastman Chem. Co.,* 642 F.3d 1355, 1361 (Fed. Cir. 2011) (“[C]laim terms need only be construed to the extent necessary to resolve the controversy”). The deficiencies of the Petition are readily identifiable without defining the bounds of any specific claim term or phrase. (*Id*.)

V. The Applied References

A. Beam

Beam discloses a complete, but generalized, Adaptive Anti-Blinding Headlight (“AABH”) system. The AABH system has a multiplicity of LED-

produced microbeams that "operate at maximum intensity at all times" allowing "the driver to have the equivalent of high beam headlights or brighter on at all times, greatly enhancing the ability to see at night." (Ex. 1005, 6:11-12, 6:40-44, 6:54-55, 3:8-15.) Beam provides significantly reduced illumination only in those portions of the headlight beam that would otherwise dazzle or annoy other drivers. (Ex. 1005, 6:40-44.) This is accomplished by "darken[ing] those microbeams that would otherwise illuminate areas near to the source of the impinging beam, thus eliminating the blinding of a driver in an oncoming vehicle, while continuing to provide intense forward illumination." (Ex. 1005, 1:15-19, Claims 4, 5, emphasis added.)

Beam expresses the importance of placing the camera inside the lamp and boresighted with the lamp, both in terms of the problems when the camera is not within the lamp and the benefits of including the camera within the lamp. Specifically, Beam notes "headlights on automobiles frequently are misaligned because of a slight jar or bump, or simply because vibrations of the vehicle shift their adjustments." (Ex. 1005, 1:49-53). This misalignment is relative to a camera not positioned within the lamp, which can, at a minimum, result in a compensation by the lamp in an unexpected manner relative to a scene viewed by the camera – e.g., the lamps are no longer aligned and therefore the adjustment will be incorrect. Beam solves this problem by expressly placing the sensor (camera) within the

lamp – "The sensor will be co-located with the light source so that errors in alignment are automatically compensated." (Ex. 1005, 2:63-65; Ex. 2001, ¶24).

While Beam discloses blanking or darkening LED microbeams that would otherwise dazzle other drivers, it does not disclose or teach changing direction of any LED microbeams. Nor would it benefit from such control, as its normal mode is to "operate at maximum intensity," obviating a need to "add" or "increase" light anywhere. (Ex. 1005, 1:15-19.) Thus, Beam begins with a premise that an LED array, "operat[ing] at maximum intensity at all times," is already maximally placing light everywhere it can, leaving nothing left to place, move or add. Against such a fully and maximally illuminated field, Beam then concerns itself with determining where to remove light.

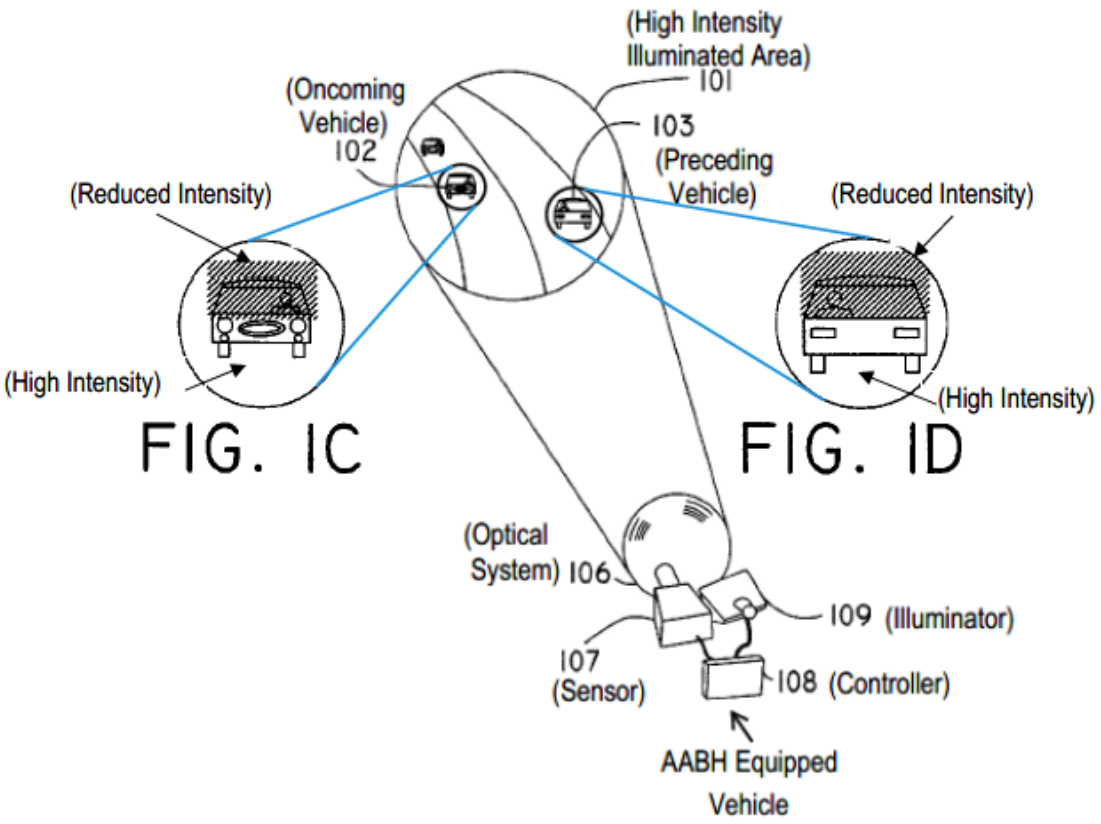

(Ex. 1005, FIGs. 1, 1C, 1D, Annotated)

In Beam's AABH system, illuminator 109 projects individually controlled narrow-angle microbeams to provide high-intensity illumination of illuminated area 101. Incoming light—which could be associated with headlights of an oncoming vehicle 102 and/or taillights of a preceding vehicle 103, streetlights, motorcycles or other light sources—is transmitted through optical system 106 and detected by a sensor (camera) 107. Data from sensor 107 is used by controller 108 to determine a corresponding position/size of microbeams that must be significantly reduced in intensity corresponding to the shaded areas in Fig. 1C, and in Fig. 1D. (Ex. 1005, 4:9-24, 53-59, 62-64.)

Beam describes two distinct embodiments using alternative components that significantly reduce illumination intensity of individual microbeams in response to detecting incoming light. (Ex. 1005, Figs. 3, 4.) However, neither embodiment discloses increasing intensity beyond the maximum intensity for any microbeams, nor changing the direction of any of the microbeams.

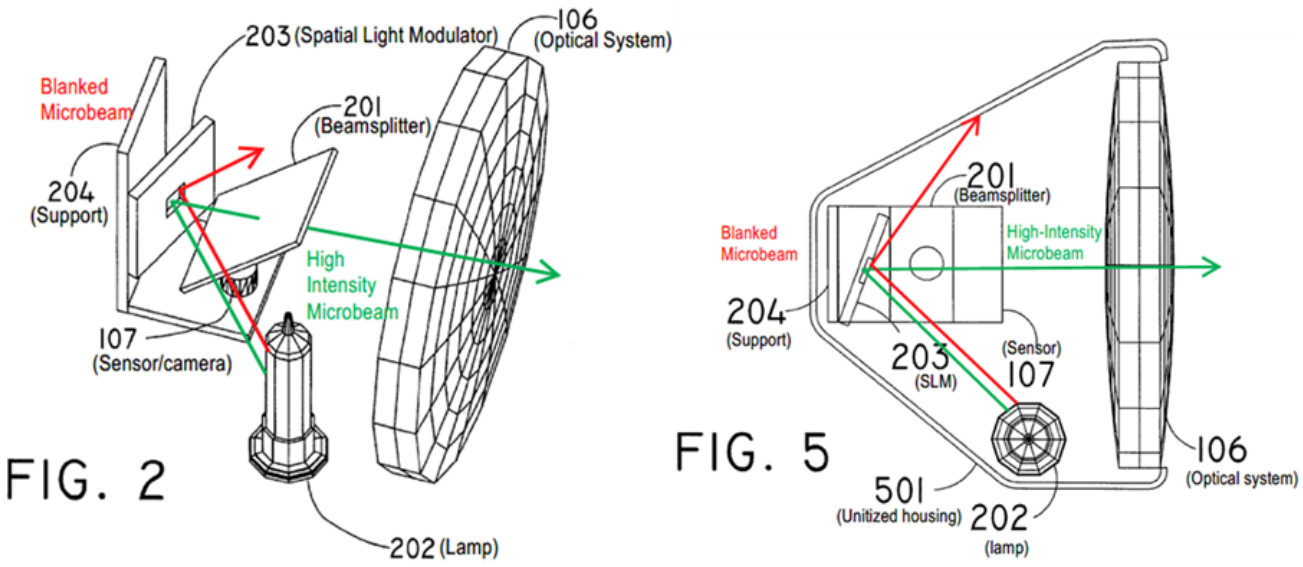

(Ex. 1005, FIGs. 2, 5, Annotated)

In the first embodiment illustrated in Fig. 2 (perspective view) and Fig. 5 (top view), light from lamp 202 falls on spatial light modulator (SLM) 203, which is controlled so that the associated individual microbeams are either 1) reflected by SLM 203 at full intensity through beam splitter 201 and out through headlamp optical system 106, or 2) "blanked (attenuated by being either absorbed or deflected [by SLM 203] to an absorbing surface" so that they <u>do not exit the headlamp optical system</u> 106. (Ex. 1005, 4:36-40, 5:65-66.)

SLM 203 blanks one or more microbeams to reduce the intensity of illumination of the overall headlight beam by deflecting the blanked microbeams to an internal absorbing surface of the headlamp 501. It does not, however, change the direction or angular position of the headlamp beam exiting optical system 106 because the blanked microbeams are "diverted or attenuated at the source" and never exit the headlamp optical system 106. (Ex. 1005 at 5:66.) Furthermore, changing the direction of the microbeams exiting the headlamp optical system may result in misalignment of the field-of-view ("FOV") of the microbeams exiting the optical system 106 relative to the FOV of sensor 107 detecting incoming light.

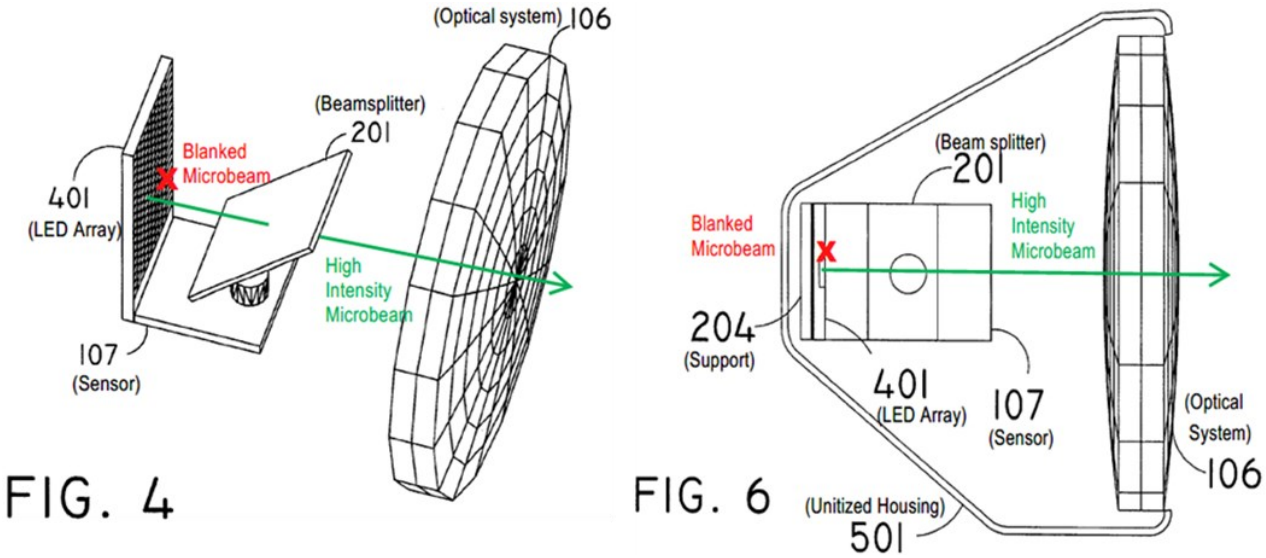

(Ex. 1005, FIGs. 4, 6, Annotated)

The second Beam embodiment is illustrated and described with respect to Fig. 4 (perspective view) and Fig. 6 (top view). In this embodiment, a light source array 401 <u>replaces both</u> SLM 203 and lamp 202. This can include an LED array

that generates the narrow-angle microbeams. (Ex. 1005, 5:3-16, 5:28-31.) Microbeam blanking is accomplished by dimming one or more of the LEDs, making the modulator of the first embodiment superfluous; it is thus expressly removed from the second embodiment. (*Id*.)

In operation, incoming light enters through optical system 106 and is reflected by beamsplitter 201 to sensor 107. (Ex. 1005, 5:3-16.) The sensor signals corresponding to the angular position (azimuth/elevation) or the spatial location of the detected light are mapped by controller 108 to associated microbeams to determine the size (number) and location of the LEDs within LED array 401 to be blanked or dimmed. (Ex. 1005, 5:10-16.) Beam does not disclose processing by controller 108 to differentiate among various types of light sources. The output of the remaining fully active and unchanged LEDs creates the high-intensity microbeams projected out through optical system 106. (Ex. 1005, 3:62-64, 4:53-5:16.)

Beam's AABH system generates a high-intensity beam formed by non-moveable microbeams reliably and consistently aligned with the FOV of the camera/sensor. Individual microbeams are blanked, attenuated, or otherwise dimmed in response to detected incoming light to darken portions of the high-intensity illumination. (Ex. 1005, 2:26-52.) If a source of that light happens to be a headlamp, this blanking or dimming has the effect of preventing blinding a driver

of the vehicle that includes the headlamp. (Ex. 1005, 2:26-52.)

Beam is a complete and functional system capable of selectively blocking or preventing emission in response to detected light, that simply operates differently from the ’551 Patent. For example, A POSITA would clearly understand that Beam does not disclose the ability to discern what is producing the detected light or use of coordinates and coordinate related information in the manner claimed.

B. Satonaka

Satonaka uses a different method of changing illumination than Beam, electing to limit bright headlamp illumination to the distance between an emitting vehicle and a preceding vehicle. Satonaka achieves this by using a captured image to determine the approximate size of the gap between the vehicles. The size of that gap is then used to control the headlamp beam.

Satonaka relies on a camera 22 that is mounted “[a]t the top of this windshield glass 14 and inside of vehicle 10 (at the driver’s visual field position, or in other words, near the driver’s eyepoint).” (Ex. 1014, [0017].)

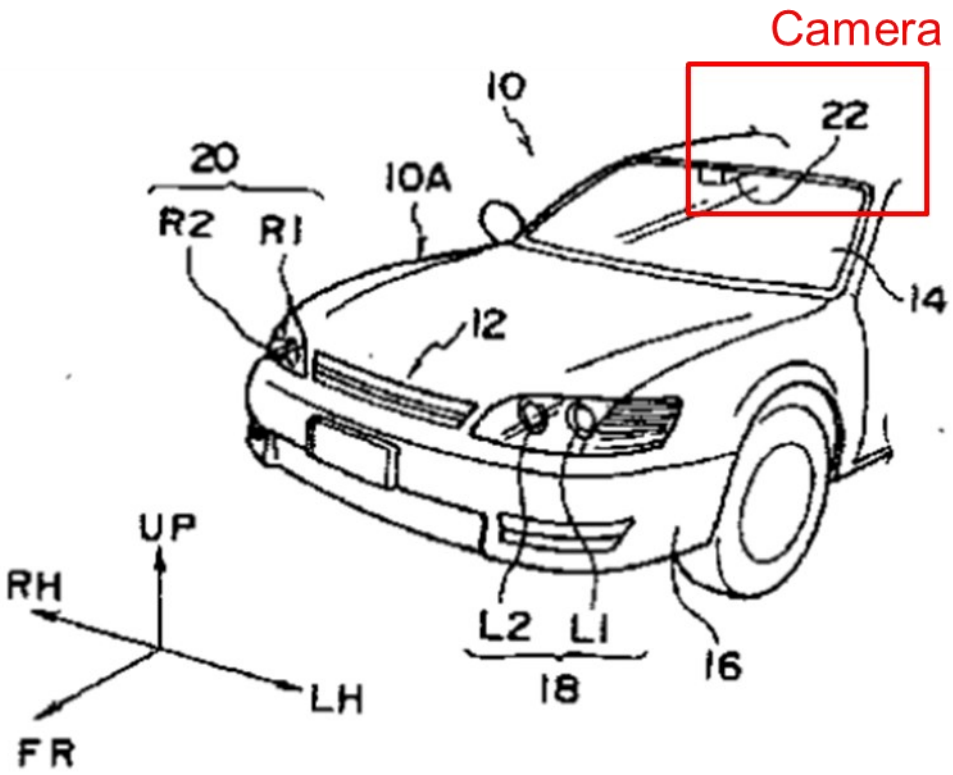

(Ex. 1014, Fig. 1, Annotated)

With reference to Figure 4, Satonaka discloses a strategy for processing the image captured at the driver's eyeline. (Ex. 1014, [0026].)

(FIGURE 4)

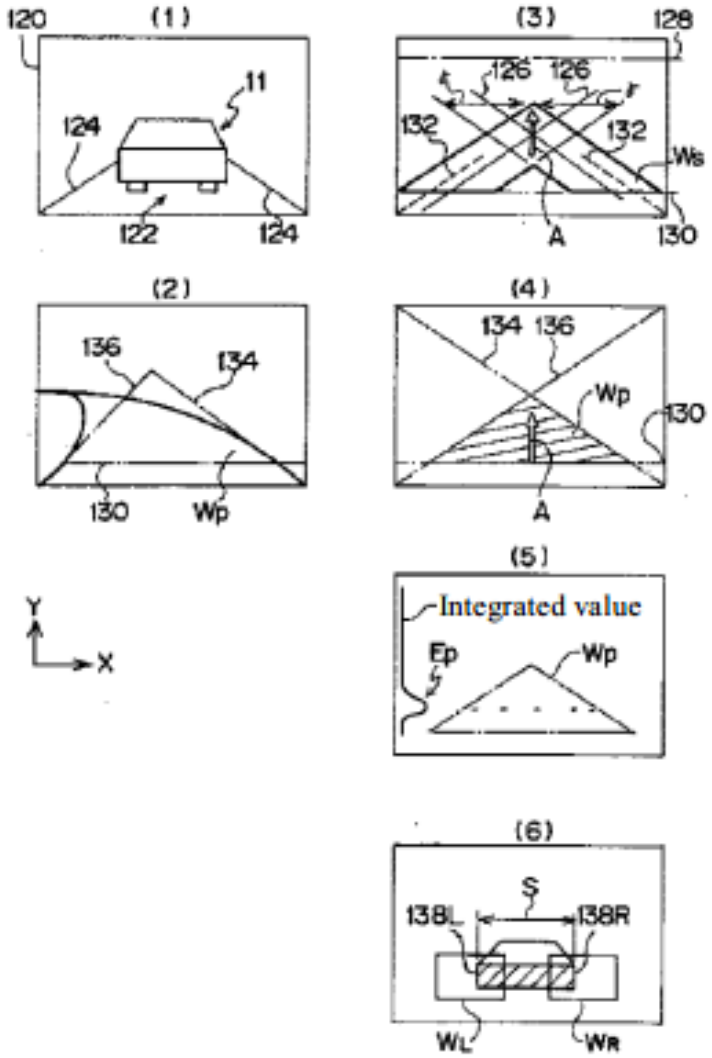

(Ex. 1014, Fig. 4)

Satonaka discloses an image 120 "that was obtained by camera 22, [in which a] preceding vehicle 11 is positioned within white lines 124 on both sides of the lane of road 122 on which vehicle 10 is traveling." (Ex. 1014, [0026].) As will be appreciated from Fig. 4(1), this image appears comparable to a driver's

perspective, a result of Satonaka's intentional camera placement "near the driver's eyepoint."

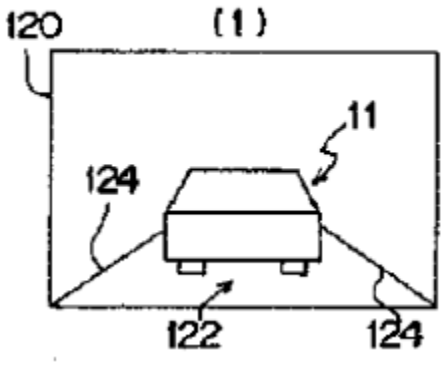

(Ex. 1014, Fig. 4(1))

Next, Satonaka's system "perform[s] white line candidate point extraction and colinear approximation processing" to winnow the image down to an area-of-consideration called the "vehicle recognition region W_P," which coincides with the lane of travel (Ex. 1014, [0027]).

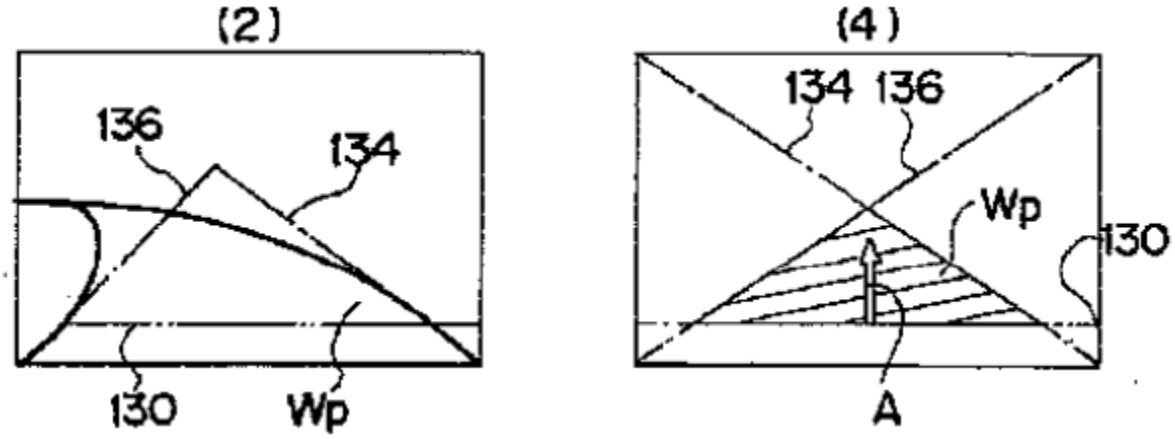

(Ex. 1014, Figs. 4(2), 4(4))

That is, from the camera perspective at the eyeline of the driver, where the preceding vehicle is visible between the also-visible lane lines, Satonaka derives a vehicle recognition region bounded by the lane lines on either side, extended to intersection at an apex (Ex. 1014, Fig. 4(3).)

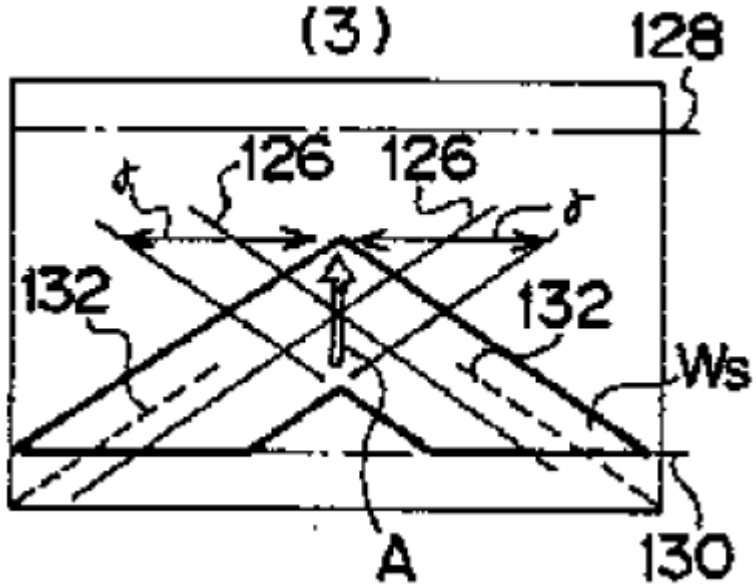

(Ex. 1014, Fig. 4(3))

Satonaka then performs "detection processing" on illumination within WP, which can include, at least, detection of light in some instances. (Ex. 1014, [0030], [0069].) Then Satonaka treats the light in the bounded region as though it came from a vehicle – "If a continuous point … is stably detected within the window regions, it will be adjudged that preceding vehicle 11 is present." (Ex. 1014, [0031].) Satonaka teaches both predicates, detected light and that the light be within the recognition region, in order to adjudge the presence of the vehicle.

Satonaka discusses further refinement of a second, oncoming vehicle recognition region W_{P0}, in order to refine the region to "region W_{OO} that includes the region between the upper limit line and lower limit line [in Fig. 5] as determined in advance and <u>in which there is high probability of the presence of oncoming vehicle</u> 11A." (Ex. 1014, [0035].)

It is clear from a reading of Satonaka that: 1) It benefits from the camera placement at the driver's eyeline in the center of the windshield; 2) it has no correlation of coordinates to its headlamps; 3) it uses the coordinates for the sole purpose of creating a referential distance-measurement in the image; and 4) it responds to the presence of a vehicle by changing illumination of an entire beam, not selective portions.

C. Karlsson

Karlsson discloses a headlight system using fixed LED arrays. Individually controllable LEDs create "spotlight beams" to provide a field of intense forward illumination (brighter than conventional dipped headlights). (Ex 1010, Abstract.) The system responds to sensed light, detected with light sensors, to turn off LEDs corresponding to detected light. Karlsson also expressly disfavors prior art systems that use a sensor outside of the lamp, such as one mounted to the windscreen (windshield). (Ex. 1010, 2:10-18.) Karlsson solves the issues with windscreen-mounted sensors by providing light sensors inside the lamp, e.g., interspersed with

the LEDs. "The sensor means and the lighting means according to the present invention can be advantageously combined into a single integrated lighting device, whereby the field of view of the light-sensitive sensors and the illumination field of the light beam to be emitted, will coincide." (Ex. 1010, 3:27-31.)

Karlsson discloses "a lighting device 1 . . . [with] lighting means in the form of a light source 2 and light modulator means 3." (Ex. 1010, 8:10-18.) "The light source 2, the light modulator means 3 and the lens 6 are arranged on an optical axis 8" to form light 5 "into a desired emitted light beam 7." (*Id*.) The system includes "sensor means consisting of a light-sensitive sensor 9 and a further lens 10 disposed on the side of sensor 9 that is exposed to the incident light, such that incident light 11 on the lens 10 is formed into an incident light beam 12 on light-sensitive sensor 9." (Ex. 1010, 8:19-23.)

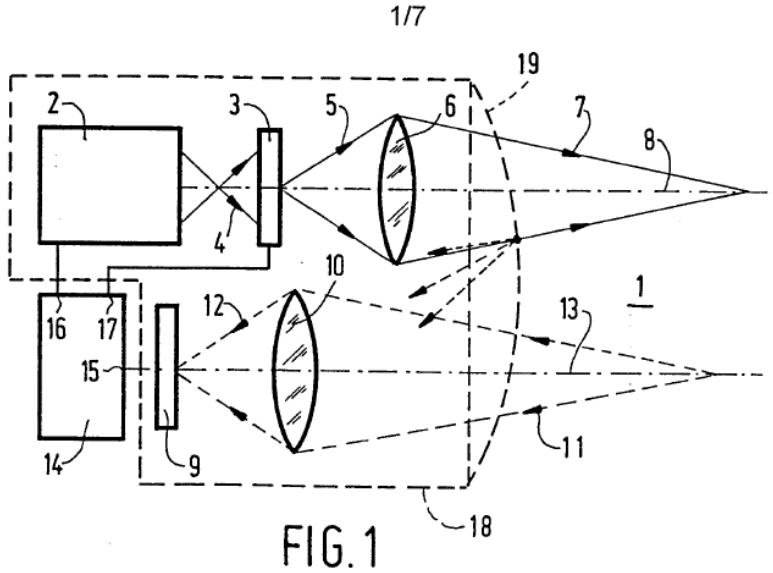

(Ex. 1010, Fig. 1)

Karlsson discloses that "a preferred embodiment of the invention comprises spotlight sensors in the form of, for example, photosensitive diodes, photo transistors or other light sensitive semiconductor components, which are spatially distributed in a predetermined manner or at random so as to be capable of detecting light from desired directions or from all directions." (Ex. 1010, 5:18-23.) While these sensors can include photosensitive plates "as used in modern video cameras," Karlsson makes no teaching that the sensor is operative as a camera or that an image is ever captured or contemplated. (Ex. 1010, 12:23-24.)

Karlsson primarily discloses control in terms of goals, such as "[t]he light modulator means 3 are controlled by the control means 14 <u>in such a manner that</u> the light 4 emitted by the light source 2 is processed into a light beam 7 <u>having a desired pattern and intensity</u>" that is "<u>determined on the basis of</u> the light 11 that is

detected by the light-sensitive sensor 9 via the further lens 10." (*Id.*, 9:3-8.) Controlling "the pattern and the intensity of the light beam 7" of a headlight "in such a manner that no light at all or light having a low intensity is emitted in those directions from which light is detected by the light-sensitive sensor 9" prevents "glaring or blinding of oncoming traffic." (Ex. 1010, 9:18-23.)

With reference to Figure 6, Karlsson discloses "a light beam 33 which is composed of separate, spatially distributed . . . spotlight beams 34." (Ex. 1010, 13:31-32.) The "spotlight beams 34 can be obtained, for example, by using a light source 2 which is composed of a grid of separate light sources, such as LEDs, which can preferably be controlled either individually or in groups." (Ex. 1010, 14:1-4, emphasis added.)

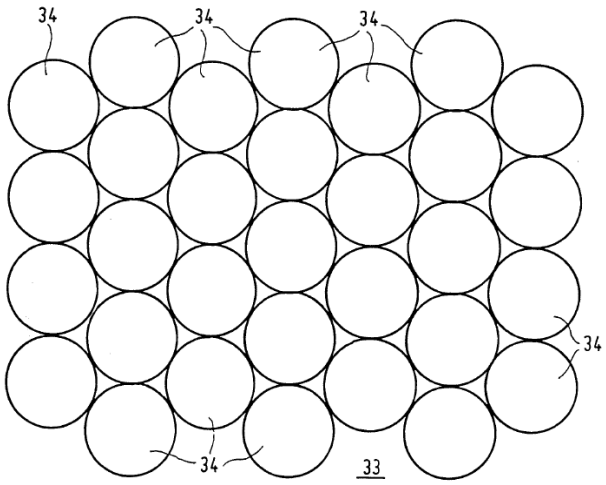

FIG. 6

(Ex. 1010, Fig. 6)

Referring to Figure 14, "a number of the spotlight sources are grouped in

specified levels" where "non-shaded spotlight sources indicated at D provide the dipped light function in accordance with existing vehicle headlights, whilst the single-shaded spotlight sources indicated at I provide the main-beam light function of existing vehicle headlights." (Ex. 1010, 19:23-28.) Further "[t]he double-shaded spotlight sources indicated at D/I are both operative as dipped and main-beam [lights]." (*Id.*)

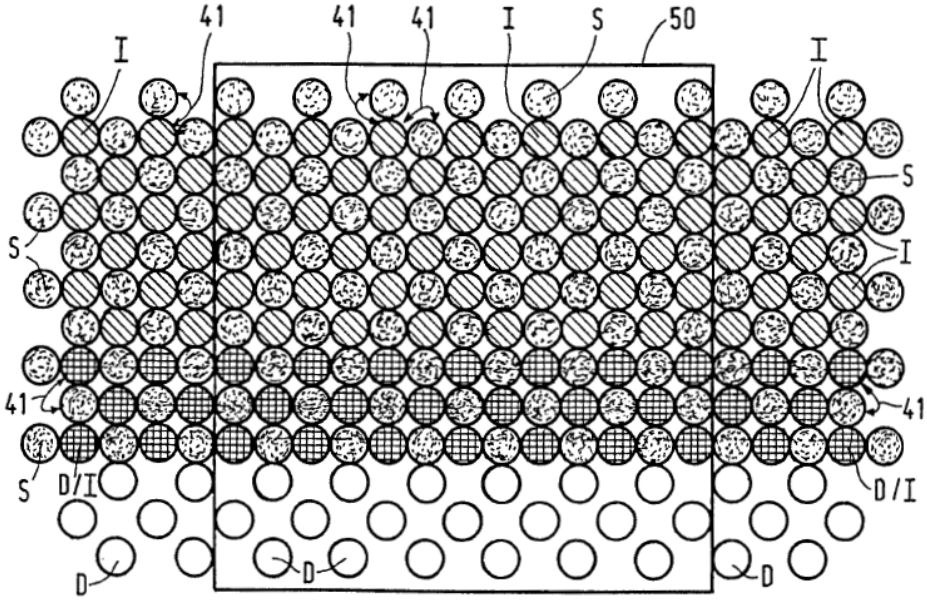

FIG. 14

(Ex. 1010, Fig. 14)

The "emitted light beam 50 is represented as a window which can <u>shift in the plane of the drawings from the left to the right and from the top to the bottom</u>, if desired, and vice versa, and which may <u>vary as regards its shape and dimension</u> in dependence on the desired pattern and direction of the beam" (Ex. 1010, 19:29-

33.)

On review of Karlsson in its entirety, a POSITA would understand that Karlsson expressly desires to place a sensor inside a lamp to solve Karlsson's noted prior art issues with placement near the windscreen of a vehicle. Further, a POSITA would understand that Karlsson does not disclose: 1) use of coordinates for controlling LEDs; or 2) much, if any, specificity on what to actually do when light is detected, other than generalities such as goals to diminish emission directed in a direction of the detected light.

D. Nakamura

The disclosure cited from Nakamura is substantially the same as Satonaka, and the references share a common assignee. In particular, similar to Satonaka, Nakamura discloses a camera 22 that is mounted "[a]t the top of this windshield glass 14 and inside of vehicle 10 (at the driver's visual field position, or in other words, near the driver's eyepoint)." (Ex. 1013, [0012].) Nakamura also discloses the same image processing strategy as Satonaka – namely, using the image to determine the distance between vehicles and limiting intense illumination to that distance based on the size of that distance, as determined from the image. (Ex. 1013, Fig. 10.)

VI. The Board Should Deny Institution on Procedural Grounds

The Board has discretion to deny institution. 35 U.S.C. § 314(a); *see Cuozzo*

Speed Techs., LLC v. Lee, 136 S.Ct. 2131, 2140 (2016). The Board's discretion is informed by 35 U.S.C. § 316(b), which requires the Board to consider "the efficient administration of the Office, and the ability of the Office to timely complete proceedings." *See also* Consolidated Trial Practice Guide ("CTPG") at 5.

In this case, the Board should exercise its discretion, and deny institution because as explained below: A) the Petition lacks particularity; and B) Petitioner does not justify filing three petitions challenging the '551 Patent, which requires an inefficient use of the Board's resources. Therefore, the Board should exercise its discretion and deny institution. 35 U.S.C. §§ 314, 316(b); 2018 CTPG at 56.

A. The Petition Lacks Particularity under 35 U.S.C. § 312(a)(3)

Under 35 U.S.C. § 312(a)(3), it is Petitioner's burden to adequately explain its challenge and the references it uses. The Petition adopts an extreme word count optimization strategy of hiding the claim limitations in a claim appendix, resulting in a lack of particularity regarding the challenged claims. The Petition also mischaracterizes teachings in the applied references and combines them in a vague manner to create a LED headlight system that does not and cannot function to provide controlled light delivery as claimed.

Petitioner's vague, and often factually incorrect application of the applied references, leave Patent Owner and the Board in a position where they must venture a guess at how the Petition is interpreting and applying the references.

Adequate explanation is Petitioner's statutory burden from the onset. As such, the Petition should be denied institution for failing to comply with the statutory requirement.

An IPR petition must identify "with particularity, each ***claim*** challenged, the ***grounds*** on which the challenge to each claim is based, and the ***evidence*** that supports the grounds for the challenge to each claim." 35 U.S.C. § 312(a)(3). "In an IPR, the petitioner has the burden from the onset to show with particularity why the patent it challenges is unpatentable." *Harmonic Inc. v Avid Tech., Inc*., 815 F.3d 1356, 1363 (Fed. Cir. 2016) citing 35 U.S.C. § 312(a)(3). The PTAB Trial Practice Guide advises that "parties should avoid submitting a repository of all the information that a judge could possibly consider, and instead focus on concise, well-organized, easy-to-follow arguments supported by readily identifiable evidence of record." (CTPG at 39.) Further, "[t]he petition must specify where each element of the claim is found in the prior art patents or printed publications relied upon." 37 C.F.R. § 42.104(b)(4).

"The statutory requirement of particularity in a petition for IPR takes on heightened importance when considered in conjunction with SAS's 'all-or-nothing' approach," and "the Board may consider whether a lack of particularity as to one or more of the asserted grounds justifies denial of an entire petition." *Adaptics LTD. v. Perfect Co*., IPR2018-01596, Paper 20 (PTAB March 6, 2019)

(Informative). Further, "where a petition contains voluminous or excessive grounds, Office guidance indicates '[t]he panel will evaluate the challenges and determine whether, in the interests of efficient administration of the Office and integrity of the patent system (*see* 35 USC § 316(b)), the entire petition should be denied under 35 USC § 314(a).'" *Id*. at 18, citing SAS Q&As (June 5, 2018) ("SAS Q&As"), 11 at Part D, Effect of SAS on future challenges that could be denied for statutory reasons, Question D2.

1. The Petition Does Not Specify Where Each Claim Element is Found in the Prior Art

Under 37 C.F.R. § 42.104(b)(4), "The petition must specify where each element of the claim is found in the prior art patents or printed publications relied upon." Petitioner challenges 32 claims (claims 24-55) under at least four grounds, yet the language of the Challenged Claims is largely absent from Petitioner's arguments. (Petition at 21-83.) Instead Petitioner's arguments include a claim identifier, e.g., "[24.5]/[32.5]/[40.5]/[48.5], and often a simple paraphrase of complex claim limitations, without any justification or explanation, inviting the reader to embark on a scavenger hunt to find the <u>actual</u> claim limitation in the Claim Appendix. *See, e.g.,* Petition at 62 compared to Appendix A (Petition at 102.)

Appendix A includes claim comparison tables, but the tables do not include

all claim limitations, nor a decoder ring to explain how Petitioner arranged the claim limitations. For example, Petitioner separates independent claim 20 into claim limitations [24.p]-[24.10], and compares claim limitations [24.p]-[24.7] to claim limitations of independent claims 32, 40, and 48 at pages 101-103. However claim limitations [24.8]-[24.10] are located on pages 108 and 109. Claim limitations [32.p]-[32.7] are located on pages 101-103, and claim limitations [32.8a] and [32.8b] are located on page 110, however claim limitation [32.9] does not appear in Appendix A. Unsurprisingly, this scattershot approach is confusing for the reader.

2. The Petition Does Not Identify Grounds with Particularity

1. Lumping Anticipation and Obviousness Grounds

Although Grounds 1 and 3 are each presented as obviousness grounds, Petitioner argues that the primary reference of each ground discloses all limitations of each independent claim. For example, claim limitations [24.5]/[32.5]/[40.5]/[48.5] require "*one or more sensors, including one or more cameras, placed on the structure for detecting coordinate-specific information about the illuminated area, at least one of said cameras in communication with power, and in communication with at least one of the one or more processors*."

For Ground 1, Petitioner relies on Beam's "implicit" disclosure or

alternatively, Beam modified by Satonaka for satisfying this limitation: "Alternatively, it would have been obvious to a POSA to modify Beam's system to map each pixel with coordinates, as taught by Satonaka, to provide the algorithmic detail implicit in Beam." (Petition at 29.) Petitioner states that "[i]f Patent Owner argues that Beam does not explicitly disclose determining and storing coordinates, it would have been obvious to modify Beam to do so in view of Satonaka." (Petition at 18.)

Similarly, regarding Ground 3, Petitioner relies on Karlsson or alternatively, Karlsson modified by Nakamura, for satisfying claim limitations [24.5]/[32.5]/[40.5]/[48.5]. "Alternatively, it would have been obvious to a POSA to modify Karlsson's system to map the image with coordinates, as taught by Nakamura, to provide the algorithmic detail implicit in Karlsson." (Petition at 63.) Petitioner states that "[i]f Patent Owner argues that Karlsson does not disclose producing and storing coordinates with its images, it would have been obvious to a POSA to modify Karlsson's system to include the coordinates of the pixels, and the corresponding vehicle recognition process, as taught by Nakamura." (Petition at 56.)

The USPTO discourages such "if patent owner argues" disclaimer-type language: "**Do NOT '*suggest*'** other proposed rejections in footnotes or 'disclaimer-type' language." (Ex. 2003 at 3, Best Practices and FAQs for Filing

Requests for Reexamination Compliant with 37 CFR 1.510 and 1.915, PTAB, May 2010 (emphasis in original).) The USPTO also discourages such lumping of anticipation and obviousness challenges: "***Do NOT lump*** together multiple proposed rejections based on different grounds. [] Separate rejections based on anticipation and rejections based on obviousness." (*Id,* emphasis in original.) The Petition does not identify with particularity "the ***grounds*** on which the challenge to each claim is based," and therefore should be denied institution under 35 U.S.C. § 312(a)(3). Petitioner's lack of particularity leaves the Board and Patent Owner in a position where they must guess at how the Petition is interpreting and applying the references.

2. Lumping Alternative Teachings

Petitioner also uses disjunctive terminology to combine each primary reference with one or more teachings of a secondary reference. For example, regarding Ground 1, Petitioner proposes combining Beam with Satonaka's hardware and/or software for satisfying the camera limitations of claims [24.5]/[32.5]/[40.5]/[48.5]. Regarding the software implementation, Petitioner states that "[a]lternatively, it would have been obvious to a POSA to modify Beam's system to map each pixel with coordinates, as taught by Satonaka, to provide the algorithmic detail implicit in Beam." (Petition at 29.)

Petitioner states that "[t]his modification only involves basic programming

changes to the algorithm stored on Beam's memory, not changes to Beam's physical components." (Petition at 19.) However, Petitioner also relies on Satonaka's hardware, *i.e.*, its remote camera 22 connected to a battery BT for satisfying the camera limitations. (Petition at 20, 28.) For example, Petitioner states that "a POSA would have understood that the camera is 'in communication with power' as claimed" and "[t]o the extent that this standard, powered connection is not expressly disclosed by Beam, Satonaka discloses that its vehicle headlamps are "connected to battery BT." (Petition at 28.) Therefore Petitioner appears to rely on Satonaka's hardware and software as alternative teachings. That would render the argument about no changes to "physical components" of Beam consequently inapplicable under certain of Petitioner's arguments.

Similarly, regarding Ground 3, Petitioner proposes combining Karlsson with Nakamura's software and/or hardware for satisfying the camera limitations of claims [24.5]/[32.5]/[40.5]/[48.5]: Regarding the software implementation, Petitioner states that "[a]lternatively, it would have been obvious to a POSA to modify Karlsson's system to map the image with coordinates, as taught by Nakamura, to provide the algorithmic detail implicit in Karlsson." (Petition at 63.) Petitioner states that "[t]his modification only involves basic programming changes, not changes to Karlsson's physical components." (Petition at 56.) Petitioner, however, also relies on Nakamura's hardware for satisfying the

limitation. For example, Petitioner states that "both Karlsson and Nakamura use the same overall sensor system architecture—a camera connected with processing circuitry and memory—and Nakamura explains how to implement the coordinate mapping of the pixels received by a camera," and "[t]his would have provided a POSA with an easily applicable example (from Nakamura) to be implemented on a structurally similar system (Karlsson)." (Petition at 58.) Therefore, Petitioner appears to rely on Nakamura's hardware and software as alternative teachings.

As shown in the following table, Grounds 1 and 3 expand into at least 3 grounds each:

Grounds			Challenged Claims	References
Lumped Ground #1	1A	102	24, 25, 30–33, 38–41, 46–49, 54–55	Beam
	1B	103	24, 25, 30–33, 38–41, 46–49, 54–55	Beam + Satonaka's Software
	1C	103	24, 25, 30–33, 38–41, 46–49, 54–55	Beam + Satonaka's Hardware
Lumped Ground #3	3A	102	24, 25, 30–33, 38–41, 46–49, 54–55	Karlsson
	3B	103	24, 25, 30–33, 38–41, 46–49, 54–55	Karlsson + Nakamura's Software
	3C	103	24, 25, 30–33, 38–41, 46–49, 54–55	Karlsson + Nakamura's Hardware

The Petition does not clearly state which of the "Lumped Ground #1" combinations, or which of the four "Lumped Ground #3" combinations, Petitioner

is relying on. And Petitioner's analysis for certain claim limitations does not address all Lumped Ground combinations, such as the "physical components" argument noted above, and comparable other arguments.

It is unclear to which grounds the Patent Owner is expected to respond, and which grounds the Board must undertake in its review of the petition. In *Adaptics*, the Board determined "that the lack of particularity [in the Petition] results in voluminous and excessive grounds," and that "in the interests of efficient administration of the Office and integrity of the patent system and as a matter of procedural fairness to Patent Owner, the entire petition should be denied under 35 USC § 314(a)." *See* 35 U.S.C. § 316(b); *see also* SAS Q&As, question D2." *Adaptics* at 24. The Petition does not identify with particularity, "the ***grounds*** on which the challenge to each claim is based," and therefore should be denied institution under 35 U.S.C. § 312(a)(3).

B. Petitioner's Parallel Petitions Raise Fairness, Timing, and Efficiency concerns under § 316(b)

The Board will consider whether multiple petitions challenging the same patent is fair and efficient, because "[b]ased on the Board's experience, one petition should be sufficient to challenge the claims of a patent in most situations." CTPG at 59. "Two or more petitions filed against the same patent . . . may place a substantial and unnecessary burden on the Board and the patent owner and could

raise fairness, timing, and efficiency concerns. *See* 35 U.S.C. § 316(b)." CTPG at 59.

While recognizing that "there may be circumstances in which more than one petition may be necessary, including, for example, when the patent owner has asserted a large number of claims in litigation," the Board clearly relates this statement to Petitioner "need." (*Id.*). In the same breath, the Board notes "this should be rare." Further, "the Board finds it unlikely that circumstances will arise where three or more petitions by a petitioner with respect to a particular patent will be appropriate." (*Id.*)

Nonetheless, Petitioner filed <u>three</u> IPR petitions challenging the '551 Patent within two weeks: 1) The Petition ("Petition 1"), 2) IPR2023-00318, Paper 2 (Ex. 2004, "Petition 2"), and 3) IPR2023-00336, Paper 2 (Ex. 2005, "Petition 3".) Petition 1 challenges 32 claims (claims 24-55) as obvious over: 1) Beam and Satonaka, with or without Kobayashi; and 2) Karlsson and Nakamura, with or without Gotou. Petition 2 challenges 32 claims (claims 56-87) as obvious over: 1) Beam and Satonaka, with or without Kobayashi; and 2) Karlsson and Nakamura, with or without Gotou. (Ex. 2004 at 3.)

In Petitions 1 and 2, Petitioner challenges all claims with the Beam/Satonaka group of grounds and with the Karlsson/Nakamura group of grounds. These grounds are cumulative and clearly redundant. Satonaka and Nakaumra are literally

used for the exact same teachings, verbatim, but for some figure renumbering. The overlapping art among the petitions indicates that Petitioner could have dropped one of the redundant groups of grounds and consolidated Petitions 1 and 2 into one petition, while still challenging the same claims and all the claims. It is doubtful that the "unlikely circumstances" supporting three petitions, as contemplated by the Board, included a desire to advance duplicative, overlapping arguments on multiple grounds for every single claim of the patent.

The PTAB also requires Petitioners to justify filing multiple parallel petitions. CTPG at 60, FN 4 ("[I]t will be **expected** that petitioners will justify multiple petitions in the first instance in their petitions or in a separate paper [of no more than 5 pages] with the petitions, and patent owners will respond in their preliminary responses or in a separate paper with their preliminary responses.") However, Petitioner makes no attempt to justify filing three parallel petitions challenging the '551 Patent, e.g., "The '551 patent is also the subject of IPR2022-00315 and IPR2022-00336." Petition 2, Ex. 2004 at 87; *see also* Petition 3, Ex. 2005 at 89. Petitioner's redundant parallel petitions place a substantial and unnecessary burden on the Board and the Patent Owner and raise fairness, timing, and efficiency concerns, and therefore should be denied under 35 U.S.C. §§ 316(b), 314.

VII. Institution Should Be Denied Because No Ground Has a Reasonable Likelihood of Success

Independent Claims 24, 32, 40, and 48 each require "*one or more sensors, including one or more cameras, placed on the structure for detecting coordinate-specific information about the illuminated area, at least one of said cameras in communication with power, and in communication with at least one of the one or more processors*."

For Ground 1, Petitioner combines Beam with Satonaka's hardware and/or software disclosure related to its camera 22 and image processing to satisfy this limitation. (Petition at 18-19, 28-29.) Similarly, for Ground 3, Petitioner combines Karlsson with Nakamura's hardware and/or software disclosure related to its camera 22 and image processing to satisfy this limitation. (Petition at 55-56, 63-64.)

Petitioner failed to meet the requisite burden of showing a reasonable likelihood that it would prevail on either of the Grounds for at least the following reasons: Petitioner's rationale for combining references for its hardware implementations: 1) is disparaged or discouraged when the references are considered in their entirety; and 2) renders the primary reference unsatisfactory or inoperable. Petitioner's rationale for combining references for its software implementations: 3) is impermissibly vague regarding how the references would be

combined. And Petitioner's rationale for combining references for all implementations: 4) suffers from hindsight bias.

A. Person of Ordinary Skill in the Art Would Not Have Been Motivated to Combine Beam and Satonaka or Karlsson and Nakamura

"[T]here must be some articulated reasoning with some rational underpinning to support the legal conclusion of obviousness." *KSR Int'l v. Teleflex Inc*., 550 U.S. at 418, 82 USPQ2d at 1396 (2007), *quoting In re Kahn*, 441 F.3d 977, 988 (Fed. Cir. 2006.)

1. Petitioner's Rationale for Combining References is Undermined by the References Themselves, at Least One Reference Teaches Away From the Combination

"An inference of nonobviousness is especially strong where the prior art's teachings undermine the very reason being proffered as to why a person of ordinary skill would have combined the known elements." *DePuy Spine, Inc. v. Medtronic Sofamor Danek, Inc*., 567 F.3d 1314, 1326 (Fed. Cir. 2009). Petitioner had, and failed to meet, the burden of at least addressing these teaching away statements. *Arctic Cat Inc. v. Bombardier Recreational Prods. Inc*., 876 F.3d 1350, 1363 (Fed. Cir. 2017) ("Evidence suggesting reasons to combine cannot be viewed in a vacuum apart from evidence suggesting reasons not to combine").

a. Ground 1: Petitioner's Rationale for Combining Beam with Satonaka's Remote Camera Teaching Undermines, and Teaches

Away from, Petitioner's Very Reason for the Combination: Ensuring Tracking Accuracy

Petitioner relies on Satonaka's hardware, *i.e.*, its remote camera 22 and electrical connections for satisfying the "*camera*" limitations of claims [24.5]/[32.5]/[40.5]/[48.5], for at least Ground 1C. For example, Petitioner states that "a POSA would have understood that the camera is 'in communication with power' as claimed" and "[t]o the extent that this standard, powered connection is not expressly disclosed by Beam, Satonaka discloses that its vehicle headlamps are "connected to battery BT." (Petition at 28.) Petitioner states that "both Beam and Satonaka use the same basic architecture—a camera connected with processing circuitry and memory—and Satonaka provides details of how to implement the coordinate mapping of its pixels." (Petition at 20.) Further, "[t]his would have provided a POSA with an easily applicable example (from Satonaka) to be implemented on a structurally similar system (Beam)." (Petition at 20.)

Satonaka discloses headlamps 18 and 20 that are provided on the top part of the front bumper 16, and a camera 22 that is mounted "[a]t the top of this windshield glass 14 and inside of vehicle 10 (at the driver's visual field position, or in other words, near the driver's eyepoint)." (Ex. 1014, [0017]; Ex. 2001, ¶25.)

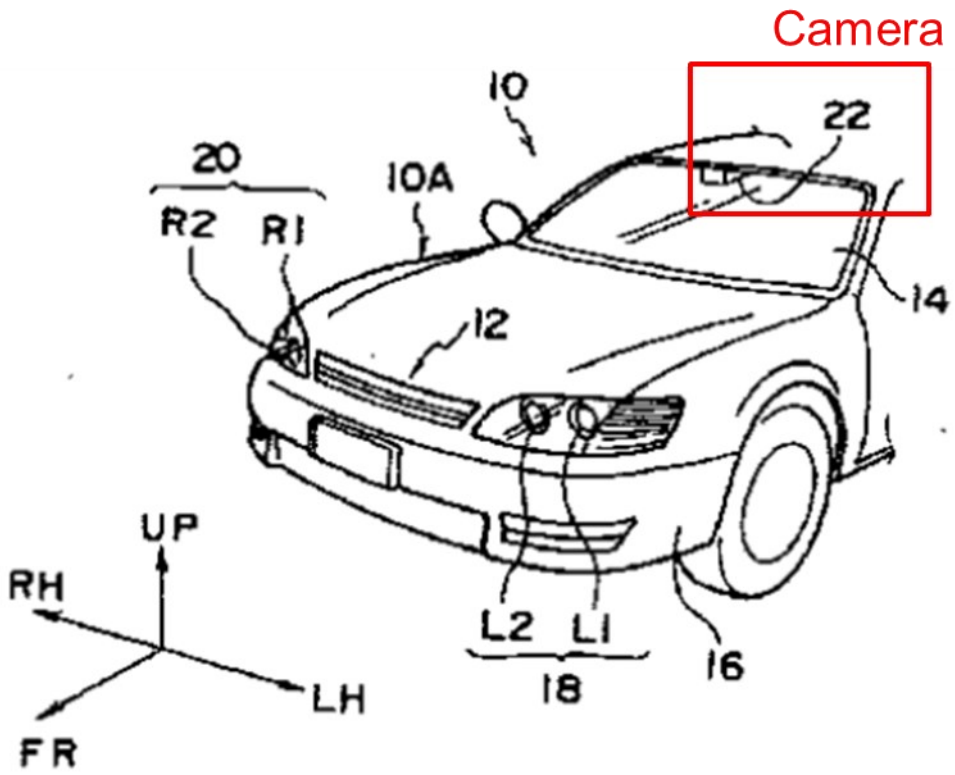

(Ex. 1014, Fig. 1, Annotated)

With reference to Figure 4, Satonaka discloses processing an image 120, from the driver's viewpoint, "that was obtained by camera 22, [in which a] preceding vehicle 11 is positioned within white lines 124 on both sides of the lane of road 122 on which vehicle 10 is traveling." (Ex. 1014, [0026]; Ex. 2001, ¶26.)

Beam discloses, with reference to Figures 5 and 6 below, mounting the imaging sensor 107 within the headlight assembly:

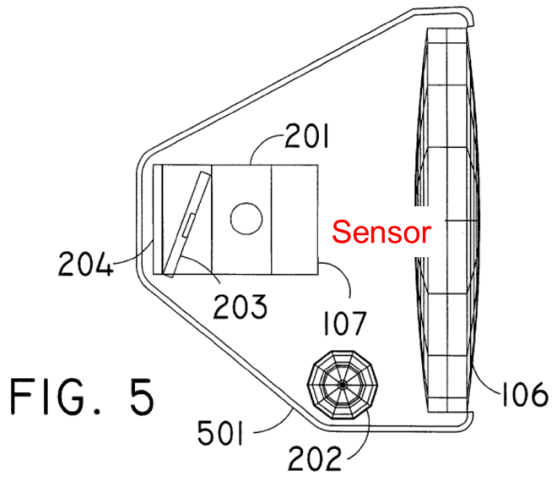

FIG. 5

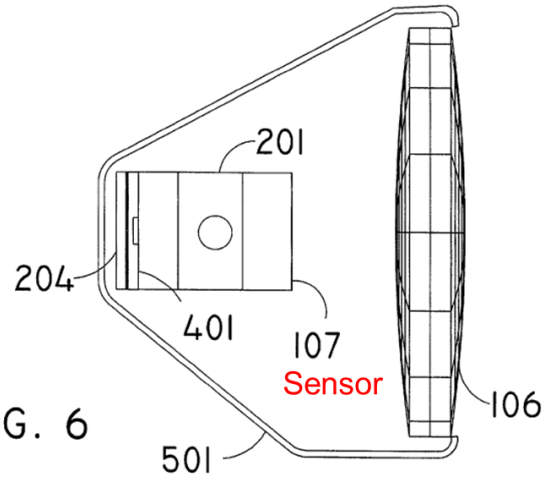

FIG. 6

(Ex. 1005, FIGs. 5, 6, Annotated)

Beam explains that mounting the sensor within the headlamp assembly is critical to ensure accuracy "[t]he sensor will be co-located with the light source so that errors in alignment are automatically compensated." (Ex. 1005, 2:63-65; Ex. 2001, ¶24.) Beam recognizes that placement of the sensor in a remote location outside the lamp, such as where Satonaka would place its camera 22, results in a possibility of misalignment between the lamp and camera and discourages such placement (Ex. 1005, 1:50-53). Beam's placement of the sensor inside the lamp maintains relative alignment – if one gets misaligned, so does the other. (Ex. 1005, 2:64-65.)

Petitioner's stated motivation for combining Beam and Satonaka is to ensure tracking accuracy, i.e., "to <u>further ensure</u> that Beam accurately 'tracks the location of the upcoming vehicle, dynamically varying in position and in size,' improving

illumination quality and safety for drivers." (Petition at 20, quoting Ex. 1005 at 6:25-27.) However, Beam's teachings of mounting the sensor within the headlamp assembly to automatically compensate for error, expressly discourages and teaches away from Petitioner's combination of modifying Beam to include Satonaka's camera 22 that is mounted to the top of the windshield. A POSITA would not have combined Beam and Satonaka, as proposed by Petitioner, because Beam's teachings undermine the very reason being proffered as to why a person of ordinary skill would have combined the known elements. *See DePuy Spine, Inc.*, 567 F.3d 1314, 1326 (Fed. Cir. 2009).

1. Ground 3: Petitioner's Rationale for Combining Karlsson with Nakamura's Remote Camera Teaching Undermines, and Teaches Away from, Petitioner's Very Reason for the Combination: Accurately Identifying Traffic

Petitioner relies on Nakamura's hardware, *i.e.*, its remote camera 22 and electrical connections for satisfying the "*camera*" limitations of claims [24.5]/[32.5]/[40.5]/[48.5] for at least Ground 3C. Petitioner states that "both Karlsson and Nakamura use the same overall sensor system architecture—a camera connected with processing circuitry and memory—and Nakamura explains how to implement the coordinate mapping of the pixels received by a camera." (Petition at 58.) Further, "[t]his would have provided a POSA with an easily applicable example (from Nakamura) to be implemented on a structurally similar

system (Karlsson)." (Petition at 58.)

Nakamura discloses headlamps 18 and 20 that are provided on the top part of the front bumper 16, and a camera 22 that is mounted "[a]t the top of this windshield glass 14 and inside of vehicle 10 (at the driver's visual field position, or in other words, near the driver's eyepoint)." (Ex. 1013, [0012][1].)

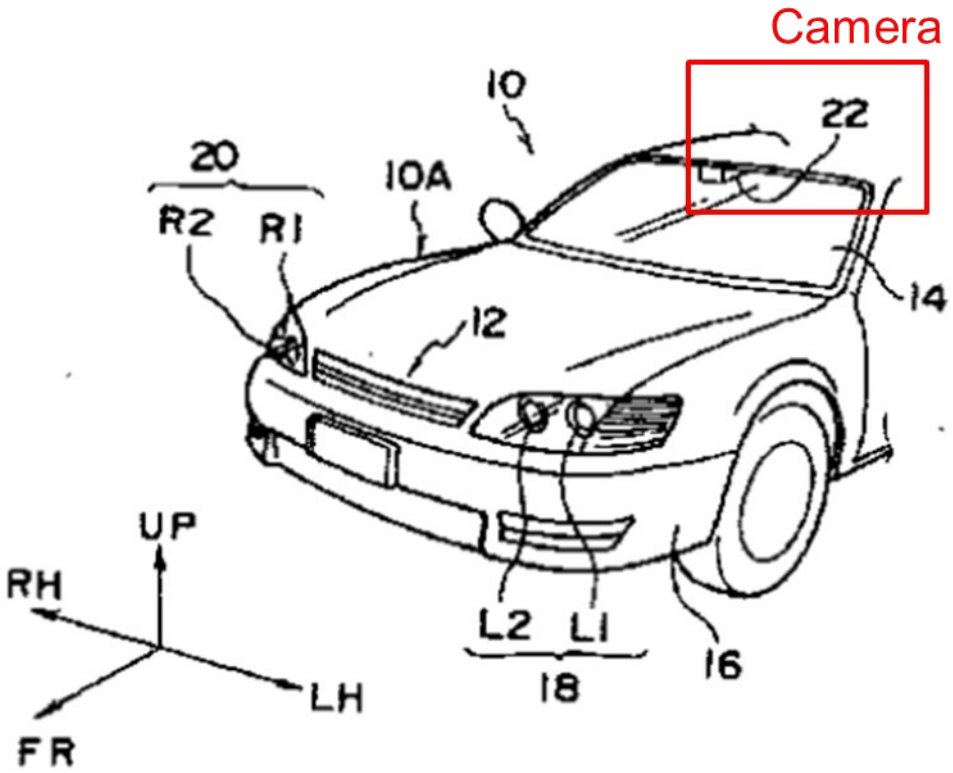

(Ex. 1013, Fig. 1, Annotated)

Karlsson discloses sensors disposed in a headlight. The system includes "a light-sensitive sensor 9 and a further lens 10 disposed on the side of sensor 9 that is exposed to the incident light, such that incident light 11 on the lens 10 is formed

[1] Nakamura and Satonaka have substantially similar disclosures.

into an incident light beam 12 on light-sensitive sensor 9." (*Id*., 8:19-23.)

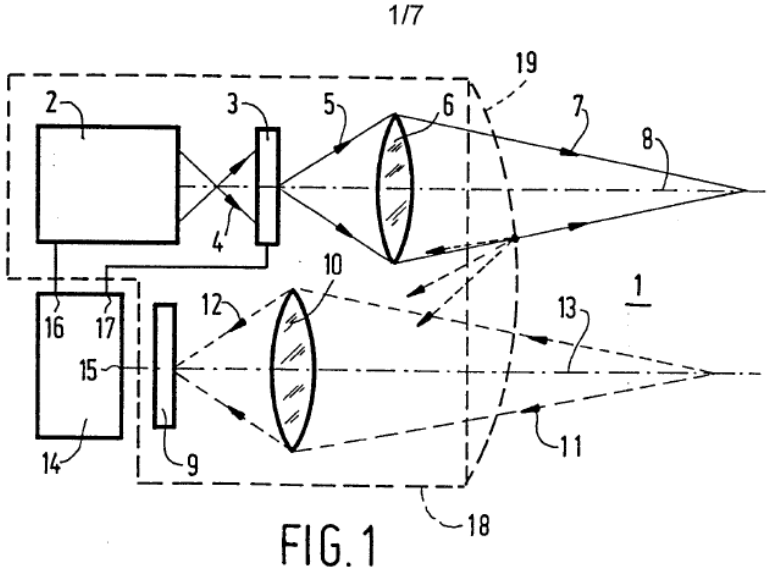

(Ex. 1010, Fig. 1)

Karlsson further discloses that the "sensor means and the lighting means according to the present invention can be advantageously combined into a single integrated lighting device, whereby the field of view of the light-sensitive sensors and the illumination field of the light beam to be emitted, will coincide." (Ex. 1010, 3:27-31, emphasis added.) Karlsson, like Beam, discourages mounting sensers remote from the headlights, e.g., on a "windscreen [*sic* windshield]," – "the separate mounting of the headlights and the sensors is **not to be preferred**, because this requires additional assembly time, additional wiring, additional alignment operations and the like, which significantly adds to the cost of production, in particular in the case of mass production, for example in the automotive industry." (Ex. 1010, 2:10-18.)

Karlsson recognizes that placement of the sensor in a location outside the lamp, such as where Nakamura would place its camera 22, results in a possibility of misalignment, additional wiring, and additional cost, especially for an automotive application. (*Id.*). Whereas Karlsson's placement of the sensor inside the lamp as a single integrated lighting device maintains relative alignment, which "gives designers a high degree of freedom, which is in particular desirable when the lighting device is used as a headlight in motor vehicles of different types and dimensions." (Ex. 1010, 3:31-33.)

Petitioner's stated motivation for combining Karlsson and Nakamura is to "further ensure Karlsson's system accurately identifies traffic ahead and dims its headlights appropriately, improving illumination quality and safety for drivers." (Petition at 57.) However, Karlsson's teachings of mounting the sensor within the headlamp assembly to minimize alignment operations discourages and teaches away from Petitioner's combination of modifying Karlsson to include Nakamura's camera 22 that is mounted to the top of the windshield. A POSITA would not have combined Karlsson and Nakamura because Karlsson's teachings undermine the very reason being proffered as to why a person of ordinary skill would have combined the known elements. *See DePuy Spine, Inc.*, 567 F.3d 1314, 1326 (Fed. Cir. 2009).

2. Petitioner's Rationale for Combining References Renders the Primary Reference Inoperable and Unsatisfactory for Its Intended Purpose

If a proposed modification would render the prior art invention being modified unsatisfactory for its intended purpose, then there is no suggestion or motivation to make the proposed modification. *In re Gordon*, 733 F.2d 900, 221 USPQ 1125 (Fed. Cir. 1984). And, as before, Petitioner completely fails to appreciate, let alone address, this issue.

a. Ground 1: Petitioner's Combination Renders Beam Inoperable and Unsatisfactory for Its Intended Purpose of Ensuring Tracking Accuracy

Again, Petitioner relies on Satonaka's hardware, *i.e.*, its remote camera 22 and electrical connections for satisfying the "*camera*" limitations of claims [24.5]/[32.5]/[40.5]/[48.5], for at least Ground 1C. (Petition at 20, 28.) Beam discloses mounting the sensor within the headlamp assembly to ensure accuracy "[t]he sensor will be co-located with the light source so that errors in alignment are automatically compensated." (Ex. 1005, 2:63-65.) Petitioner proposes modifying Beam to include Satonaka's camera 22, which is located remote from the headlight at the top of the windshield. (Petition at 20; Ex. 1014, Fig. 1.) Petitioner's proposed modification of Beam to replace its co-located sensor with Satonaka's remote camera 22 would render Beam inoperable, or unsatisfactory, for its intended

purpose of reducing alignment errors. Therefore, there is no suggestion or motivation to make the proposed modification. *See In re Gordon*, 733 F.2d 900, 221 USPQ 1125 (Fed. Cir. 1984).

1. Ground 3: Petitioner's Combination Renders Karlsson Inoperable and Unsatisfactory for Its Intended Purpose of Minimizing Alignment Operations and Additional Cost

Petitioner relies on Nakamura's hardware, *i.e.*, its remote camera 22 and electrical connections for satisfying the "*sensor*" limitations of claims [24.5]/[32.5]/[40.5]/[48.5] for at least Ground 3C. (Petition at 58.) Karlsson discloses mounting the sensor within the headlamp assembly to minimize alignment operations and additional cost and provide "designers a high degree of freedom, which is in particular desirable when the lighting device is used as a headlight in motor vehicles of different types and dimensions." (Ex. 1010, 2:10-18, 3:31-33.) Petitioner proposes modifying Karlsson to include Nakamura's camera 22, which is located remote from the headlight at the top of the windshield. (Petition at 55-56; Ex. 1013, Fig. 1.)

Petitioner's proposed modification of Karlsson to replace its internal light sensitive sensor 9 with Nakamura's remote camera 22 would render Karlsson inoperable, or unsatisfactory, for its intended purpose of reducing alignment errors and providing designers with a high degree of freedom. Therefore, there is no

suggestion or motivation to make the proposed modification. *See In re Gordon*, 733 F.2d 900, 221 USPQ 1125 (Fed. Cir. 1984).

3. Petitioner Does Not Explain How a POSITA Would Have Combined the Prior Art

Petitioner must explain how and why a POSITA would have modified or combined the prior art. *KSR Int'l Co. v. Teleflex Inc*., 550 U.S. 398, 418 (2007) (requiring articulated reasoning with rationale underpinning as to how or why a person of ordinary skill in the art would have combined or modified the teachings of the prior art); *Personal Web Techs., LLC v. Apple, Inc*., 848 F.3d 987, 994 (Fed. Cir. 2017) (holding obviousness determination to be improper where the record lacked a "clear, evidence-supported account" of "how the combination" would work). *Adidas AG v. Nike, Inc.,* IPR2016-00922, Paper 21, 36 (October 19, 2017) (holding that challenged claims are patentable when the "Petitioner fails to explain why and how a person of ordinary skill in the art would combine" two references.)

a. Ground 1: Petitioner Does Not Explain How a POSITA Would Have Combined Beam's Co-located Sensor with Satonaka's Remote Sensor Based Image Processing

Petitioner relies on Satonaka's image processing software for satisfying the "*camera*" limitations of claims [24.5]/[32.5]/[40.5]/[48.5], for at least Ground 1B. (Petition at 29.) Even if one were to combine Satonaka's image processing software with Beam's lamp co-located sensor, Petitioner fails to explain how an

image from Beam's co-located and boresighted camera would be used by Satonaka's vehicle recognition zone image processing strategy that is based on a remote camera located at the top center of the windshield and that expressly defines subsequent processing from the visual perspective that provides. (Ex. 2001, ¶¶24-27.)

Satonaka mounts a camera at the center of the windshield near the driver's eyeline. (Ex. 1014, [0016], Fig. 1.) From this perspective, the camera generally sees the road as the driver does, with preceding traffic centered between lane markers, and lane markers largely visible on either side of a vehicle. (*Id.* at Fig. 4, 120.) If the viewpoint were shifted, for example, to a front left headlamp, a number of issues would occur. The perspective of lane markers would shift, the left side marker would appear straighter, the right-side maker would skew left, assuming it was even visible at all, as the preceding vehicle 11 would obscure significantly more of the right side marker. (Ex. 2001, ¶28.) Petitioner never recognizes, let alone provides a solution for, these issues.

Further, Satonaka does not include a mapping of coordinates to LEDs or lights in general. Nor does it even use its own coordinates directly to control lights. (Ex. 2001, ¶29.) Importation of a new reference system of coordinates would require remapping the LEDs to the new coordinate system. (*Id.*) Although Petitioner never actually alleges that the coordinates are even actually used for

control of anything, merely that they are stored, were a POSITA to use them for control they would have to be correlated to lights in some manner. (*Id.*) This represents another fact Petitioner does not address, other than stating that one could "simply modify software instructions stored in the memory of Beam's controller/processor (in view of Satonaka)." (Petition at 20; Ex. 2001, ¶29.)

Instead of recognizing and addressing these engineering issues with the combination, Petitioner makes statements such as "this modification requires no physical changes," and "Beam and Satonaka use the same basic architecture." (Petition at 20; Ex. 2001, ¶30.)

Petitioner does state that "Satonaka provides details of how to implement the coordinate mapping of its pixels" (*Id.*), but this is <u>not</u> a teaching of how to map coordinates to light sources (a minimal engineering step required to use coordinates in Beam). Rather, this is simply a statement that the image of Satonaka *can be contemplated as coordinates*. (Petition at 20; Ex. 2001, ¶31.)

Petitioner does not explain how the combination of Beam and Satonaka's Software Implementation would work, *i.e.*, how an image from Beam's co-located and boresighted camera would be used by Satonaka's vehicle recognition zone image processing strategy—a processing strategy that is based on a remote camera being located at the top center of the windshield and viewing and processing the scene from that perspective. (Ex. 2001, ¶32.) Therefore the obviousness ground is

improper. *See Personal Web Techs., LLC v. Apple, Inc.*, 848 F.3d 987, 994 (Fed. Cir. 2017).

1. Ground 3: Petitioner Does Not Explain How a POSITA Would Have Combined Karlsson's Internal Sensors with Nakamura's Remote Sensor Based Image Processing

Petitioner relies on Karlsson's collection of sensors combined with Nakamura's image processing software for satisfying the "*camera*" limitations of claims [24.5]/[32.5]/[40.5]/[48.5], for at least Ground 3B. (Petition at 63.) As explained in Section VII.B., Karlsson discloses a collection of sensors, *e.g.*, "a matrix of photo diodes or in the case of a light-sensitive sensor 23, a photo-sensitive plate as used in modern video cameras." (Ex. 1010, 12:22-24, 5:18-23.) However, Karlsson does not disclose that its sensors have the full capability of cameras, specifically with regards to capturing images. (Ex. 2001, ¶33.) Petitioner fails to explain how Karlsson's system would determine vehicle coordinates using Nakamura's image processing strategy on the basis of incoming light, and without an image. (Id.)

Even if one were to combine Nakamura's image processing software with Karlsson's internal sensor, Petitioner fails to explain how light sensed by Karlsson's <u>lamp-located</u> sensor would be used by Nakamura's vehicle recognition zone image processing strategy that is based on a remote camera located at the top

center of the windshield. (Ex. 2001, ¶34, emphasis added.)

Nakamura, like Satonaka, mounts a camera at the center of the windshield near the driver's eyeline. (Ex. 1014, [0016].) From this perspective, the camera generally sees the road as the driver does, with preceding traffic centered between lane markers, and lane markers largely visible on either side of a vehicle. (*Id*., Fig. 4, 1;Ex. 2001, ¶35.) If the viewpoint were shifted, for example, to a front left headlamp, a number of issues would occur. (Ex. 2001, ¶35.) The perspective of lane markers would shift, the left side marker would appear straighter, the right side maker would skew left, assuming it was even visible at all, as the vehicle 11 would obscure significantly more of the right side marker. (Ex. 2001, ¶35.) Petitioner never recognizes, let alone provides a solution for, these issues.

Petitioner also fails to explain how the coordinates of Nakamura would be mapped to the LEDs of Karlsson. Karlsson, unlike Beam, does not even disclose an alternative system for processing an image and choosing which lights to control. Instead, Karlson discloses a system largely focused on improvements to a prior art system for adaptive control, without much detail, if any, on how such control is implemented, choosing instead to primarily discuss alternative light and sensor sources and assembly strategies. (Ex. 1010, 1:8-9, 2:2-9; Ex. 2001, ¶36.) In fact, Karlsson's lack of an actual description of control was cited by Petitioner as a reason to modify Karlsson – "Karlsson does not expressly disclose how the

direction of the target light sources is stored and processed to determine which LEDs to be dimmed to avoid glare." (Petition at 55; Ex. 2001, ¶36.)

Thus, according to Petitioner, a POSITA is searching for a storage solution and a strategy for processing the image "to determine which LEDs to be dimmed to avoid glare." (Petition at 55.) In other words, an acceptable solution should include both from a source other than Karlsson, which is allegedly missing both. While Petitioner provides a litany of discussion related to storage of coordinates, the Petition is utterly silent with regards to a way "to determine which LEDs to be dimmed to avoid glare." (*Id.*) Further, it would be a literal impossibility to obtain this teaching from Nakamura, both because Nakamura does not contemplate LEDs and because this is not how Nakamura controls light.

Despite Petitioner's complained-of absence of control disclosure in Karlsson, and express statement that "this would have led a POSA to search for known techniques detailing how sensor information, like the images recorded in Karlsson are stored and processed to determine which portions of the headlight beam need to be dimmed for glare reduction." (Petition at 55.) Petitioner ultimately turns back to Karlsson for such processing. Petitioner ultimately concludes that Nakamura's ability to identify pixels by coordinates and store such coordinates "would further ensure Karlsson's system accurately identifies traffic ahead and dims its headlights appropriately." (Petition at 57.)

Thus, Petitioner only finds "coordinate storage" in Nakamura, but coordinates storage does not solve the issue, as defined by Petitioner, of how to "determine which portions of the headlight beam need to be dimmed." (Petition at 55.) Put another way, knowing the coordinates is not enough, there must be some explanation of how those coordinates would be used to select which LEDs should be dimmed.

Nakamura, which has no concept of LEDs, cannot not teach this, and Karlsson was allegedly modified specifically because it did not teach this. At the close of Petitioner's analysis, other than the vagary of dimming headlights "appropriately," the combination still lacks the solution to the problem that allegedly necessitated the combination in the first place.

Also worth noting is the fact that Petitioner's analysis simply appears to be assuming that Karlsson collects images in the first place. Petitioner's motivation to combine recites "like the images recorded in Karlsson," without ever demonstrating that Karlsson can actually capture an image. (Petition at 55.) Petitioner merely leaps from "sensors 9 and 23 are preferably designed to be capable of precisely determining the direction and the intensity of detected light" to "thus Karlsson discloses receiving an image…" (Petition at 55.) Karlsson certainly never mentions an image of any type, and Petitioner's summary of Karlsson even notes that "Karlsson automatically varies the LED pattern in

response to control signals from light-sensitive sensors." (Petition at 13.)

Thus, the explanation lacks even a credible premise in assuming that there is an image in Karlsson to modify in the first place, or any explanation of how a determination of direction and intensity of light amounts to "receiving an image." More importantly, even if one believes the premise for motivation, no explanation is given as to the missing link, required in Petitioner's premise, to get from Nakamura's "image coordinates from the windshield-mounted camera" to the LED determination and selection required for the result of "appropriately dimmed headlights" in Karlsson. At best, Petitioner seems to be simultaneously taking the contradictory positions that this missing teaching both isn't in Karlsson and also that it is.

4. Petitioner Fails to Explain Why the References Would Have Been Combined; the Rationale to Combine Suffers from Hindsight Bias

Where a secondary reference adds features already present in a primary reference—without a countervailing reason-- there is no motivation to combine. *See Ex parte Tessier*, Appeal 2012-006616 (PTAB October 2, 2014)." "We find that the Examiner's stated reasoning, 'so as to have an alternative suitable communication and remote HVAC control as additional function from remote location beside for the utility,' is based on the use of impermissible hindsight reconstruction in view of the Appellants' disclosure." *Id* at 11, quoting *Sensonics*

Inc. v. Aerosonic Corp., 81 F.3d 1566, 1570 (Fed. Cir. 1996).

a. Ground 1: Petitioner's Combination of Beam and Satonaka is Based on Impermissible Hindsight By "Adding" Features Already Present in Beam

Petitioner's stated motivation for combining Beam and Satonaka is "to further ensure that Beam accurately 'tracks the location of the upcoming vehicle, dynamically varying in position and in size,' improving illumination quality and safety for drivers." (Petition at 20, *quoting* Ex. 1005 at 6:25-27, emphasis added.) Petitioner fails to provide any evidence that Beam does not already accurately 'track the location of the upcoming vehicle, dynamically varying in position and size." In fact, the very quote used by Petitioner as "evidence" about what the combination could achieve comes directly from Beam itself.

Beam discloses an Adaptive Anti-Blinding Headlight ("AABH") system having a multiplicity of LED-produced microbeams that "operate at maximum intensity at all times." (Ex. 1005, 6:11-12.) Beam further discloses that the AABH system includes "[a]n imaging sensor (such as a video camera) [that] faces forward, [and is] boresighted with the headlight." (Ex. 1005, 6:11-13.) A "controller module uses the sensor spatial data (video) to determine whether there are illumination sources (headlights or tail lights) present in the headlight's field-of-view." (Ex. 1005, 6:14-16.) Beam further discloses dimming "an area slightly

wider than the headlight spacing and approximately six feet high, and whose bottom edge is centered on the oncoming headlights" of the beam-bundle. (Ex. 1005, 6:20-24.) And "[a]s the positions of both vehicles move, the blanked area tracks the location of the oncoming vehicle, dynamically varying in position and in size." (Ex. 1005, 6:24-27.)

Petitioner does not explain any deficiency in Beam's teaching of tracking the location of the oncoming vehicle, or improvements by combining Beam with Satonaka. Instead, Petitioner merely states that the combination would "further ensure that Beam accurately 'tracks the location of the upcoming vehicle, dynamically varying in position and in size, improving illumination quality and safety for drivers." (Petition at 20, *quoting* Ex. 1005, 6:25-27.)

Petitioner does not explain any new or different functionality provided by this combination, instead Petitioner quotes Beam's disclosure describing features that are already disclosed by Beam. Petitioner's rationale to combine fails because it is based on the use of impermissible hindsight reconstruction in view of Patent Owner's disclosure. *See Ex parte Tessier*, Appeal 2012-006616 (PTAB October 2, 2014), *citing Sensonics Inc. v. Aerosonic Corp*., 81 F.3d 1566, 1570 (Fed. Cir. 1996).

1. Ground 3: Petitioner's Combination of Karlsson and Nakamura is Based on Impermissible Hindsight By "Adding" Features

Already Present in Karlsson

Petitioner notes that Karlsson discloses that its sensors are "preferably designed to be capable of precisely determining the direction and the intensity of the detected light." (Petition at 55 *quoting* Ex. 1010 at 12:19-22.) Thus, Karlsson already contends that it has no issues in this regard and Petitioner admits as much. Further, Nakamura provides no teaching or statement that would suggest that Karlsson's light detection would benefit from the inclusion of Nakamura's coordinates, as those coordinates simply provide the direction (not even the intensity) of detected light – something Karlsson can already determine. (*Id.*; Ex. 2001, ¶38.)

Petitioner does not explain any deficiency in Karlsson's teaching of determining the direction and the intensity of the detected light, or improvements by combining Karlsson with Nakamura. Instead, Petitioner merely states that the combination would further ensure Karlsson's system accurately identifies traffic ahead and dims its headlights appropriately, improving illumination quality and safety for drivers." (Petition at 57.)

Petitioner does not explain any new or different functionality provided by this combination, instead Petitioner quotes Karlsson's disclosure for the desired result of the combination, and does so by express reference to features that are already disclosed by and present in Karlsson. Petitioner's rationale to combine fails

because it is based on the use of impermissible hindsight reconstruction in view of Patent Owner's disclosure. *See Ex parte Tessier*, Appeal 2012-006616 (PTAB October 2, 2014), *citing Sensonics Inc. v. Aerosonic Corp*., 81 F.3d 1566, 1570 (Fed. Cir. 1996).

Karlsson teaches a simple control strategy in which a photosensor acts like a switch to control an adjacent light source. (Ex. 2001, ¶41.) With reference to Figure 14, Karlsson discloses:

> The spotlight sources and the spotlight sensors, … may also be formed by LEDs and photosensitive transistors, respectively. Arrow 41 schematically indicates an electric connection between the spotlight sensors and spotlight sources D, I and D/I, which, for example, may consist of transistors or the like… Integration of LEDs and phototransistors on one carrier, for example, is also possible.

(Ex. 1010, 19:34-20:5.)

If the phototransistor is functioning as a switch for the LED(s) to which it is electrically connected, then light detected by the photodetector would cause a change to the electrical current to the LED and cause it to change state. (Ex. 2001, ¶ 41.)

If a POSITA considered the above to be a control strategy, they would recognize that Karlsson, having both recitation of LED selection (via direct electrical connection to phototransistors) and determination of directionality of

detected incoming light, via the same phototransistors, represents a complete solution that not only does not require the addition of Nakamura's coordinates, but which has no use for them. (Ex. 2001, ¶42.) In a system where the direct connection to a sensor is what controls the function of an LED, there is no reason to "store" coordinates in any manner, the mere incidence of light on the sensor achieves both selection (through electrical correlation of the LED and sensor) and control. (Ex. 2001, ¶42.) That renders the addition of Nakamura, and its coordinate system, pure hindsight.

B. Petitioner's Combination of References Does Not Teach all Claim Elements

Petitioner must show where each claim limitation is found in the prior art. *See e.g.*, *Kinetic Concepts, Inc. v. Smith & Nephew, Inc.*, 688 F.3d 1342, 1361 (Fed. Cir. 2012). Failure to do so defeats a claim of obviousness. (*Id.*) To establish a prima facie obviousness rejection, all of the claimed features must be taught or suggested by the prior art. *See In re Royka,* 490 F.2d 981, 180 USPQ 580 (CCPA 1974).

1. Ground 3: The Combination Of Karlsson and Nakamura Does Not Teach Claims [24.5]/[32.5]/[40.5]/[48.5] "*one or more sensors, including <u>one or more cameras</u>, placed on the structure for detecting coordinate-specific information about the illuminated area*."

Independent claims 24, 32, 40, and 48 require "*one or more cameras*."

Petitioner relies on Karlsson's sensor 9 for satisfying this limitation for Grounds 3A and 3B. (Petition at 56, 63.) Karlsson discloses a lighting device 1 with "sensor means consisting of a light-sensitive sensor 9 and a further lens 10 disposed on the side of sensor 9 that is exposed to the incident light, such that incident light 11 on the lens 10 is formed into an incident light beam 12 on light-sensitive sensor 9." (Ex. 1010, 8:19-23.)

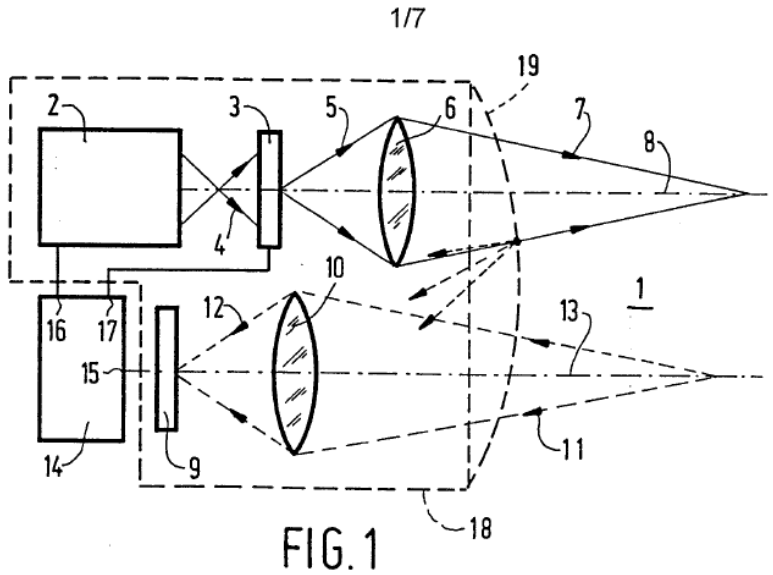

(Ex. 1010, Fig. 1)

Karlsson discloses that the sensors "may for example be comprised of a matrix of photo diodes or in the case of a light-sensitive sensor 23, a photo-sensitive plate *as used in* modern video cameras." (Ex. 1010, 12:22-24.) However, Karlsson does not disclose that its sensors have the full capability of cameras, specifically with regards to capturing images. (Ex. 2001, ¶33.) Karlsson also discloses that "a preferred embodiment of the invention comprises spotlight

sensors in the form of, for example, photosensitive diodes, photo transistors or other light sensitive semiconductor components, which are spatially distributed in a predetermined manner or at random so as to be capable of detecting light from desired directions or from all directions." (Ex. 1010, 5:18-23.) Karlsson does not teach "*one or more cameras*" as claimed, and claims 24, 32, 40, and 48 are not obvious over Karlsson. *See In re Royka,* 490 F.2d 981, 180 USPQ 580 (CCPA 1974).

VIII. Conclusion

In light of the remarks herein, Patent Owner respectfully requests that the Board deny the Porsche Petition for *inter partes* review of the '551 Patent.

Respectfully submitted,

Dated: October 26, 2023 / Sangeeta G. Shah /

Sangeeta G. Shah (Reg. No. 38,614)
Andrew B. Turner (Reg. No 63,121)
Bernard P. Tomsa (Reg. No. 60,121)
Brooks Kushman P.C.
1000 Town Center, 22nd Floor
Southfield, MI 48075
(248) 358-4400

Attorneys for Patent Owner

Certificate of Service

The undersigned hereby certifies that on October 26, 2023, a complete and entire copy of **PATENT OWNER'S PRELIMINARY RESPONSE AND ALL EXHIBITS**, was served via electronic mail by serving the correspondence email address of record as follows:

LEAD COUNSEL	BACK-UP COUNSEL
Edgar H. Haug (Reg. No. 29,309) HAUG PARTNERS LLP 745 Fifth Avenue New York, NY 10151 Telephone: (212) 588-0800 Facsimile: (212) 588-0500 ehaug@haugpartners.com	Robert E. Colletti (Reg. No. 76,417) HAUG PARTNERS LLP 745 Fifth Avenue New York, NY 10151 Telephone: (212) 588-0800 Facsimile: (212) 588-0500 rcolletti@haugpartners.com PTAB-Porsche@haugpartners.com

Respectfully submitted,

/ Sangeeta G. Shah /

Sangeeta G. Shah (Reg. No. 38,614)
Andrew B. Turner (Reg. No 63,121)
Bernard P. Tomsa (Reg. No. 60,121)
Brooks Kushman P.C.
1000 Town Center, 22nd Floor
Southfield, MI 48075
(248) 358-4400
Attorneys for Patent Owner

Certificate of Compliance Pursuant to 37 C.F.R. § 42.24

This paper complies with the type-volume limitation of 37 C.F.R. § 42.24. The paper contains 12,204 words, excluding the parts of the paper exempted by § 42.24(a).

This paper also complies with the typeface requirements of 37 C.F.R. § 42.6(a)(ii) and the type style requirements of § 42.6(a)(iii)&(iv).

Respectfully submitted,

Dated: October 26, 2023 / Sangeeta G. Shah /

Sangeeta G. Shah (Reg. No. 38,614)
Andrew B. Turner (Reg. No 63,121)
Bernard P. Tomsa (Reg. No. 60,121)
Brooks Kushman P.C.
1000 Town Center, 22nd Floor
Southfield, MI 48075
(248) 358-4400

Attorneys for Patent Owner