(19) Japan Patent Office (JP)

(12) **Japanese Unexamined Patent Application Publication** (A)

(11) Japanese Unexamined Patent Application Publication Number

Japanese Unexamined Patent Application Publication H11-18186

(43) Publication date: January 22, 1999

(51) Int. Cl.[6]	Identification codes	FI	
H04R 1/40	320	H04R 1/40	320B
H03H 21/00		H03H 21/00	
H04R 3/00	320	H04R 3/00	320

Request for examination: Not yet requested Number of claims: 6 OL (Total of 10 pages)

(21) Application number: Japanese Patent Application No. H9-167812

(22) Application date: June 25, 1997

(71) Applicant: 000136848
Primo Company Ltd.
6-25-1 Mure, Mitaka-shi, Tokyo

(72) Inventor: Kimihiro IKEDA
% Primo Company Ltd.
6-25-1 Mure, Mitaka-shi, Tokyo

(72) Inventor: Yasuo MAEKAWA
% Primo Company Ltd.
6-25-1 Mure, Mitaka-shi, Tokyo

(74) Agent: Patent Attorney Shizuyo TAMAMURA

(54) (TITLE OF THE INVENTION) PRIMARY PRESSURE GRADIENT MICROPHONE

(57) (ABSTRACT)
(PROBLEM) To provide a primary pressure gradient microphone with which sound from a target sound source in a specific direction can be acquired with good S/N in an environment in which noise is generated from every direction.
(SOLUTION) First and second omnidirectional microphone units (M1, M2) are disposed apart from one another, wherein a difference between a delay signal of the output of the second omnidirectional microphone unit and the output of the first omnidirectional microphone unit is determined by a first adding means (3), and a difference between the output of the second omnidirectional microphone unit and a delay signal of the output of the first omnidirectional microphone unit is determined by a second adding means (4). The outputs of the first and second adding means have directional characteristics in opposite directions so that the directional characteristics of the one facing a target sound source are used to pick up a target sound and noise while the directional characteristics of the other are used to pick up noise, and the difference between the two is taken so as to cancel the noise component.

FIG. 1

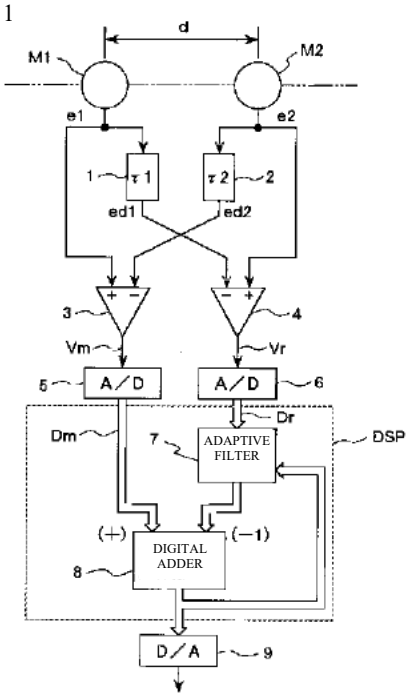

Sony v. Jawbone
U.S. Patent No. 8,503,691
Sony Ex. 1009

(SCOPE OF THE PATENT CLAIMS)

(CLAIM 1) A primary pressure gradient microphone comprising: first and second omnidirectional microphone units disposed a prescribed distance apart from one another; a first delaying means for delaying an output of the first omnidirectional microphone unit; a second delaying means for delaying an output of the second omnidirectional microphone unit; a first adding means for outputting a difference between an output of the first omnidirectional microphone unit and an output of the second delaying means; and a second adding means for outputting a difference between an output of the second omnidirectional microphone unit and an output of the first delaying means.

(CLAIM 2) A primary pressure gradient microphone comprising: first and second omnidirectional microphone units disposed a prescribed distance apart from one another; a third microphone unit disposed near the second microphone unit; a first delaying means for delaying an output of the first omnidirectional microphone unit; a second delaying means for delaying an output of the second omnidirectional microphone unit; a first adding means for outputting a difference between an output of the first omnidirectional microphone unit and an output of the second delaying means; and a second adding means for outputting a difference between an output of the third omnidirectional microphone unit and an output of the first delaying means.

(CLAIM 3) A primary pressure gradient microphone comprising: first and second omnidirectional microphone units disposed a prescribed distance apart from one another; third and fourth omnidirectional microphone unit disposed a prescribed distance apart from one another in a cross direction with respect to disposing direction of the first and second omnidirectional microphone units; a delaying means for delaying an output of the second omnidirectional microphone unit; a first adding means for adding a difference between an output of the first omnidirectional microphone unit and an output of the delaying means; and a second adding means for outputting a difference between an output of the third omnidirectional microphone unit and an output of the fourth omnidirectional microphone unit.

(CLAIM 4) A primary pressure gradient microphone comprising: first and second omnidirectional microphone units disposed a prescribed distance apart from one another; third and fourth omnidirectional microphone units disposed adjacent to and in identical sequence with the first and second omnidirectional microphone units; a second delaying means for delaying an output of the second omnidirectional microphone unit; a first delaying means for delaying an output of the third omnidirectional microphone unit; a first adding means for outputting a difference between an output of the first omnidirectional microphone unit and an output of the second delaying means; and a second adding means for outputting a difference between an output of the fourth omnidirectional microphone unit and an output of the first delaying means.

(CLAIM 5) The primary pressure gradient microphone according to any one of Claims 1 to 4, further comprising: a first A/D conversion means for converting an output of the first adding means to a digital signal; a second A/D conversion means for converting an output of the second adding means to a digital signal; and a digital signal processing means for cancelling noise components contained in both an output of the first A/D conversion means and an output of the second A/D conversion means.

(CLAIM 6) The primary pressure gradient microphone according to Claim 5, wherein the digital signal processing means comprises: an adaptive filter means for receiving an output of the second A/D conversion means; and a digital adding means for calculating a difference between an output of the adaptive filter means and an output of the first A/D conversion means.

(DETAILED DESCRIPTION OF THE INVENTION)

(0001)

(TECHNICAL FIELD OF THE INVENTION) The present invention relates to a primary pressure gradient microphone exhibiting two types of unidirectional characteristics using a plurality of omnidirectional microphone units, which exhibits excellent noise component reducing capacity and contributes to the miniaturization of the microphone, and may be effectively applied to a primary pressure gradient microphone for automobile use, for example.

(0002)

(CONVENTIONAL TECHNOLOGY) Previous applications filed by the present applicant (Japanese Unexamined Utility Model Application Publication No. S62-147476 and Japanese Unexamined Utility Model Application Publication No. S64-52393) disclose a primary pressure gradient microphone that achieves unidirectionality using two omnidirectional microphone units of essentially the same performance. In principle, this primary pressure gradient microphone is essentially the same as the configuration illustrated in FIG. 2. Two omnidirectional microphone units M1 and M2 are disposed at a distance d apart from one another, wherein the output of the microphone unit M2 is delayed by $\tau 2$ ($\tau 2$: amount of delay expressed in terms of distance) by a delay circuit 2, and the difference between the delayed output ed2 and the output e1 of the microphone unit M1 is extracted.

(0003) In a microphone configured in this way, when a sound comes from a direction at an angle θ with respect to the axial direction of the two microphone units M1 and M2, the output Vm of the microphone is given by the following formula:

$$Vm(k, \theta) = e1 - ed2$$
$$= 2 \cdot e1 \cdot \sin\{k(\tau 2 + d \cdot \cos\theta)/2\}$$

Here, $k=2\pi/\lambda$ (λ: wavelength of sound), and the sound arriving at the microphone units is a sinusoidal sound wave (sound wave with a sinusoidal wave shape). From the above formula, appropriately setting $\tau 2$ to be smaller than d yields directional characteristics such as those illustrated in FIG. 3.

(0004) To facilitate understanding here, the principle of the aforementioned primary pressure gradient microphone will be described qualitatively with reference to FIG. 6. A case in which $\tau 2$=d and θ=0 will be used as an example. An observation point corresponding to the output e1(a) of the microphone unit M1 with respect to a sound arriving from the Sa direction is Pe1(a), and an observation point corresponding to the delayed output ed2(a) on the microphone unit M2 side is apparently Ped2(a). An

observation point corresponding to the output e1(b) of the microphone unit M1 with respect to a sound arriving from the opposite direction Sb is Pe1(b), and an observation point corresponding to the delayed output ed2(b) on the microphone unit M2 side is apparently Ped2(b). As is clear from the drawing, because the observation points Pe1(b) and Ped2(b) are the same positions, e1(b)=ed2(b). Therefore, the output Vm of the microphone becomes:

$$Vm(k, \theta) = e1(a) + e1(b) - ed2(a) - ed2(b)$$

$$= e1(a) - ed2(a)$$

It can be easily understood that unidirectionality is achieved as a result.

(0005)

(PROBLEM TO BE SOLVED BY THE INVENTION) However, the primary pressure gradient microphone described above only has unidirectional characteristics with respect to the front surface side. Accordingly, in an environment in which sound (noise) is generated from all directions (four directions) (an environment in which the noise source cannot be fixed to a specific direction), the input of noise cannot be arrested by attempting to input only sound from a target sound source in a specific direction.

(0006) Therefore, although not publicly known, the present inventors investigated a microphone configured to have two types of directionality by making two of the aforementioned primary pressure gradient microphones 10-1 and 10-2 face opposite directions as one another, as illustrated in FIG. 13. The first microphone 10-1 is made to face a specific target sound source so as to pick up the sound of the target sound source and ambient noise using the unidirectional characteristics thereof. The second microphone 10-2, which is made to face the opposite direction as the first microphone 10-1, picks up only noise using the unidirectional characteristics thereof. By determining the difference between the output of the first microphone 10-1 and the output of the second microphone 10-2, it is possible to reduce noise arriving from all directions and to obtain the target sound.

(0007) As a result of further investigating the technology described above, the present inventors ascertained the following. First, the present inventors ascertained that it is physically impossible to dispose the two primary pressure gradient microphones described above at the same position, and that directional characteristics such as those illustrated in FIG. 14 introduce logical error into the removal of noise components, making it difficult to expect high-precision noise cancellation. Second, the present inventors ascertained that in order to meet the demand for miniaturization, it is necessary to realize a primary pressure gradient microphone which has two types of directional characteristics using fewer than four omnidirectional microphone units.

(0008) The present invention was conceived in light of the circumstances described above, and an object thereof is to provide a primary pressure gradient microphone that exhibits an excellent noise cancelling effect and with which two types of directionality can be achieved using four or fewer omnidirectional microphone units.

(0009) Another object of the present invention is to provide a primary pressure gradient microphone with which a sound from a target sound source in a specific direction can be acquired with good S/N in an environment in which noise is generated from every direction.

(0010) The aforementioned and other objects and novel features of the present invention will be clear from the descriptions of this specification and the attached drawings.

(0011)

(MEANS FOR SOLVING THE PROBLEM) As illustrated in FIG. 1, the best primary pressure gradient microphone according to the present invention achieves two types of directional characteristics using two omnidirectional microphone units, and comprises: first and second omnidirectional microphone units (M1, M2) disposed a prescribed distance apart from one another; a first delaying means (1) for delaying an output of the first omnidirectional microphone unit; a second delaying means (2) for delaying an output of the second omnidirectional microphone unit; a first adding means (3) for outputting a difference between an output of the first omnidirectional microphone unit and an output of the second delaying means; and a second adding means (4) for outputting a difference between an output of the second omnidirectional microphone unit and an output of the first delaying means.

(0012) When the first omnidirectional microphone unit (M1) is defined as the front surface of the microphone, a signal system for obtaining the output of the first adding means (3) is made by the two microphone units (M1, M2) to function as a main microphone (see FIGS. 2 and 3) having directional characteristics on the front surface side, and a signal system for obtaining the output of the second adding means (4) is made by the two microphone units (M1, M2) to function as a reference microphone having directional characteristics on the back surface side. In an environment in which noise is generated from every direction so that a noise source cannot be specified, the main microphone facing the target sound source picks up the target sound and noise, and the reference microphone picks up only noise. By determining the difference between the output signal component of the main microphone and the output signal component of the reference microphone, the noise components can be cancelled. At this time, the main microphone and the reference microphone are configured using the same microphone units (M1, M2), so both of the microphones can be considered to be disposed at physically the same position. In other words, the noise components picked up by both of the microphones can be considered to be essentially the same. It is therefore possible to acquire only the target sound component with high S/N.

(0013) Essentially the same functions as those described above can be realized using three omnidirectional microphone units. That is, as illustrated in FIG. 8, a third omnidirectional microphone unit (M3) is disposed near the second omnidirectional microphone unit, the main microphone is as described above, and the reference microphone is configured to obtain the difference between the output of the first delaying means (1) and the output of the third microphone unit with the second adding means. As a result, a primary pressure gradient microphone having two types of directional characteristics can be realized with three microphone units. Although the positions of the main

microphone and the reference microphone cannot be considered to be exactly the same, the second microphone unit and the third microphone unit can be disposed near one another without any distance therebetween, so a good noise cancelling effect can be achieved.

(0014) Essentially the same functions as those described above can be realized using four omnidirectional microphone units. That is, as illustrated in FIG. 9, third and fourth omnidirectional microphone units (M3, M4) are disposed a prescribed distance apart from one another in a cross direction with respect to the disposing direction of the first and second omnidirectional microphone units; the difference between the output of the delaying means for delaying the output of the second omnidirectional microphone unit and the output of the first omnidirectional microphone unit is determined by the first adding means; and the difference between the output of the third omnidirectional microphone unit and the output of the fourth omnidirectional microphone unit is determined by the second adding means. Although the number of microphone units is four, the main microphone and the reference microphone can be logically considered to be positioned in the center of the four microphone units disposed radially, which makes it possible to achieve an excellent noise cancelling effect.

(0015) Further, when four omnidirectional microphone units are used, as illustrated in FIG. 12, the main microphone and the reference microphone configured from two omnidirectional microphone units are configured from different omnidirectional microphone units (M1 to M4). That is, the main microphone is configured using the first and second omnidirectional microphone units (M1, M2), and the reference microphone is configured using the third and fourth omnidirectional microphone units (M3, M4). The main microphone has directional characteristics on the front surface side, and the reference microphone has directional characteristics on the back surface side. At this time, the sequence of the third and fourth omnidirectional microphone units is identical to the sequence of the first and second omnidirectional microphone units, and the first and second omnidirectional microphone units are disposed adjacent to the third and fourth omnidirectional microphone units. Therefore, the difference in sound fields between noise picked up by the main microphone and noise picked up by the reference microphone is minimized, which makes it possible to acquire the target sound with relatively good S/N.

(0016) Although the processing for cancelling noise using the outputs of the first and second adding means can also be performed with an analog technique, the configuration further comprises the following when a digital technique is used: a first A/D conversion means (5) for converting the output of the first adding means to a digital signal; a second A/D conversion means (6) for converting the output of the second adding means to a digital signal; and a digital signal processing means for cancelling the noise components contained in both the output of the first A/D conversion means and the output of the second A/D conversion means.

(0017) The digital signal processing means comprises: an adaptive filter means (7) for receiving the output of the second A/D conversion means (6); and a digital adding means (8) for calculating the difference between the output of the adaptive filter means and the output of the first A/D conversion means.

(0018) An example of the primary pressure gradient microphone according to the present invention is illustrated in FIG. 1. In the microphone illustrated in the drawing, two omnidirectional microphone units M1 and M2 having essentially the same performance are disposed at a distance d apart from one another, wherein the output e1 of the microphone unit M1 is delayed by $\tau 1$ ($\tau 1$: amount of delay expressed in terms of distance) by a delay circuit 1, and the output e2 of the microphone unit M2 is delayed by $\tau 2$ ($\tau 2$: amount of delay expressed in terms of distance) by a delay circuit 2. Also provided are an inversion adding circuit 3 for calculating the difference between the output e1 of the microphone unit M1 and the output ed2 of the delay circuit 2, and an inversion adding circuit 4 for calculating the difference between the output e2 of the microphone unit M2 and the output ed1 of the delay circuit 1. The inversion adding circuits 3 and 4 may be formed, for example, from operational amplifiers, feedback resistors, and input resistors, where the non-inverted inputs (+) are defined as e1 and e2, and the inverted inputs (-) are defined as ed2 and ed1.

(0019) The microphone is housed in a casing, not illustrated, so that the microphone unit M1 is disposed on the front surface. Ceramic or electrolyte-type microphone units or the like may be used for the microphone units M1 and M2.

(0020) At this time, the microphone can be understood as two types of primary pressure gradient microphones including the main microphone of FIG. 2 having a signal path for obtaining a main signal Vm from the inversion adding circuit 3 and the reference microphone of FIG. 4 having a signal path for obtaining a reference signal Vr from the inversion adding circuit 4.

(0021) The main microphone has directional characteristics on the front surface side, and therefore has directional characteristics for picking up a target sound and noise from the front surface side. The main signal Vm is given is follows:

$$Vm(k, \theta) = e1 - ed2$$
$$= 2 \cdot e1 \cdot \sin\{k(\tau 2 + d \cdot \cos\theta)/2\}$$

(0022) The main microphone, which can be understood as illustrated in FIG. 2, has directional characteristics with respect to the front surface side and has the directional characteristics illustrated in FIG. 3. The fact that such directional characteristics are achieved can be understood from the content described qualitatively above with reference to FIG. 6.

(0023) The reference microphone has directional characteristics on the back surface side, and therefore has directional characteristics for picking up noise from the back surface side without picking up the target sound and noise from the front surface side. The reference signal Vr is given as follows:

$$Vr(k, \theta) = e2 - ed1$$
$$= -2 \cdot e1 \cdot \sin\{k(\tau 1 + d \cdot \cos\theta)/2\}$$

Here, in the two formulas above, $k=2\pi/\lambda$ (λ: wavelength of sound), and the characteristics of the two omnidirectional microphone units M1 and M2 are essentially the same. The

arriving sound wave is assumed to be a sinusoidal sound wave.

(0024) The reference microphone illustrated in FIG. 4 has directional characteristics with respect to the back surface side, as illustrated in FIG. 5. The fact that such directional characteristics are achieved will be described qualitatively with reference to FIG. 7. That is, in order to facilitate understanding in FIG. 7, a case in which $\tau 1$=d and θ=0 will be used as an example. An observation point corresponding to the delayed output ed1(a) on the microphone unit M1 side with respect to a sound arriving from the Sa direction is apparently Ped1(a), and an observation point corresponding to the output e2(a) of the microphone unit M2 is Pe2(a). An observation point corresponding to the delayed output ed1(b) of the microphone unit M1 with respect to a sound arriving from the opposite direction Sb is apparently Ped1(b), and an observation point corresponding to the output e2(b) of the microphone unit M2 is Pe2(b). As is clear from the drawing, because the observation points Ped1(a) and Pe2(a) are the same positions, ed1(a)=e2(a). Therefore, the output Vr of the reference microphone becomes:

$$E(k, \theta) = e2(b) + e2(a) - ed1(a) - ed1(b)$$
$$= e2(b) - ed1(b)$$

This makes it possible to achieve unidirectionality on the back surface side.

(0025) As described above, a main microphone and a reference microphone with respectively different directional characteristics are realized by commonly using two omnidirectional microphone units M1 and M2, so this is equivalent to a case in which the main microphone and the reference microphone having different directional characteristics are disposed at physically the same position. Accordingly, the microphone illustrated in FIG. 1 picks up sounds of different components of the same sound field. On the other hand, as illustrated in FIG. 13, when the main microphone and the reference microphone are each configured using two different omnidirectional microphone units, both microphones are disposed at physically different positions, as illustrated in FIG. 14. Therefore, both microphones pick up sounds different components of different sound fields separated by a prescribed distance. In the configuration illustrated in FIG. 13, there are differences that cannot be ignored between the components of sounds picked up by the microphones 10-1 and 10-2 disposed apart from one another in an environment in which noise is generated from every direction. In the case of FIG. 1, the main microphone and the reference microphone are in exactly the same sound field, so the noise components picked up by both of the microphones can be considered to be essentially the same, even in an environment in which noise is generated from every direction.

(0026) FIG. 10 illustrates an example of a polar pattern expressing the directional characteristics achieved by combining the respective directional characteristics of the main microphone and the reference microphone. In this example, $\tau 2$=d/3 and $\tau 1$=d. As is clear from this polar pattern, the primary pressure gradient microphone consisting of the main microphone and the reference microphone achieves two types of directional characteristics on the front surface side and the back surface side with the two microphone units M1 and M2.

(0027) The output Vm of the inversion adding circuit 3 is converted to a digital signal Dm by an A/D converter 5, and the output Vr of the inversion adding circuit 4 is converted to a digital signal Dr by an A/D converter 6. Main signal data Dr outputted from the A/D converter 6 is supplied to an adaptive filter 7 such as a transversal filter, and the difference between the filter output of the adaptive filter 7 and the main signal data Dm outputted from the A/D converter 5 is calculated by a digital adder 8.

(0028) The adaptive filter 7 is a filter that adaptively varies its characteristics with respect to changes in the input signal over time. That is, the filter characteristics are varied in real time by performing an output operation for obtaining filter output by multiplying the input signal Dr by a tap coefficient and adding the value in multiple tap units, and a tap coefficient updating operation for updating the tap coefficient based on an error signal obtained as the difference between the filter output and a signal from the target system to return the filter output, and successively rewriting the tap coefficient using the updating operation. The error signal is defined as the output of the digital adder 8 at a training sequence timing for determining the filter response characteristics. The training sequence timing is defined as a timing at which the microphone units M1 and M2 do not pick up the target sound. Therefore, the filter response characteristics of the adaptive filter 7 are determined so as to cancel the respective noise components contained in the main signal data Dm and the reference signal data Dr at the training sequence timing. The training sequence is successively performed at an appropriately timing so as to follow the state in which the noise generation state of the sound field is varied from moment to moment.

(0029) As a result of the response characteristics of the adaptive filter 7 being determined successively in this way, the noise component contained in the main signal Vm is cancelled by the noise component contained in the reference signal Vr due to subtraction by digital adder 8. The output of the digital adder 8 is converted to an analog signal by a D/A converter 9. A signal primarily consisting of the target sound component can be acquired from the D/A converter 9. As a result of creating and testing a prototype of the circuit illustrated in FIG. 1 having the directional characteristics illustrated in FIG. 10, the S/N was improved by approximately 10 dB in comparison to a conventional primary pressure gradient microphone configured to obtain single directionality with two omnidirectional microphone units.

(0030) Note that the adaptive filter 7, the digital adder 8, and the like can be configured a digital signal processor DSP. In addition, a low pass filter for removing high-frequency components may be disposed at the stage preceding the A/D converters 5 and 6.

(0031) FIG. 8 illustrates an example of a case in which a primary pressure gradient microphone equivalent to that described above is configured using three omnidirectional microphone units. That is, a third omnidirectional microphone unit M3 is disposed near the omnidirectional

microphone unit M2. In FIG. 8, the reference signal Vr is generated by obtaining the difference between the output of the third microphone unit M3 and the output of the delay circuit 1 with the inversion adding circuit 4. The main signal Vm is generated in the same manner as in FIG. 1. In the case of this example, one additional omnidirectional microphone unit M3 is required in comparison to FIG. 1. In addition, the main microphone and the reference microphone are no longer physical disposed at exactly the same position. However, because the microphone units M2 and M3 can be disposed near one another, there is a better noise cancelling effect than a configuration in which two sets of primary pressure gradient microphones are disposed apart from one another with reversed directional characteristics, as illustrated in FIG. 13, and this is achieved with one fewer microphone units.

(0032) FIG. 9 illustrates an example of a case in which a microphone equivalent to that described above is configured using four omnidirectional microphone units. That is, four omnidirectional microphone units M1 to M4 are disposed radially at 90° intervals on the same periphery. The main signal Vm is the same as in the configuration of the main microphone illustrated in FIG. 1. The reference microphone for forming the reference signal Vr is configured to acquire the difference between the microphone units M3 and M4 with the inversion adder 4. The axial line of the microphone units M3 and M4 constituting the reference microphone is orthogonal to the axial line of the microphone units M1 and M2 constituting the main microphone. Accordingly, the directional characteristics thereof are as illustrated in FIG. 11, and the reference microphone does not have directional characteristics with respect to a target sound wave from the front surface. Therefore, a microphone having roughly the same two types of directional characteristics as in FIG. 1 is realized. In the case of this example, two additional omnidirectional microphone units M3 and M4 are required in comparison to FIG. 1. However, since the microphone units M1 and M4 are disposed radially at 90° intervals on the same periphery, the main microphone and the reference microphone can be considered to be physically disposed at the same position. In terms of the noise cancelling effect, this is superior to the configuration of FIG. 13 in which two sets of primary pressure gradient microphones are disposed apart from one another.

(0033) Further, when four omnidirectional microphone units are used, as illustrated in FIG. 12, the main microphone and the reference microphone configured from two omnidirectional microphone units can be configured from different omnidirectional microphone units M1 to M4. The main microphone consists of the omnidirectional microphone units M1 and M2, the delay circuit 2, and the inversion adding circuit 3. The reference microphone consists of the omnidirectional microphone units M3 and M4, the delay circuit 1, and the inversion adding circuit 4. The main microphone has directional characteristics on the front surface side, as illustrated in FIG. 3, and the reference microphone has directional characteristics on the back surface side, as illustrated in FIG. 5. The primary pressure gradient microphone illustrated in FIG. 12 is housed in a single casing.

(0034) The sequence of the omnidirectional microphone units M3 and M4 constituting the reference microphone is identical to the sequence of the omnidirectional microphone units M1 and M2 constituting the main microphone, and the microphone units M1 and M2 are disposed adjacent to the microphone units M3 and M4. That is, the distance Ls between the axial line of the microphone units M1 and M2 and the axial line of the microphone units M3 and M4 in FIG. 13 is much smaller than in the configuration illustrated in FIG. 13. In this regard, the microphone illustrated in FIG. 12 clearly differs from a configuration in which two separate primary pressure gradient microphones 10-1 and 10-2 are disposed in opposite orientations from one another, as illustrated in FIG. 13. Therefore, the difference in sound fields between noise picked up by the main microphone and noise picked up by the reference microphone is minimized, which makes it possible to acquire the target sound with relatively good S/N, as compared to the microphone in FIG. 13.

(0035) The invention made by the present inventors was described specifically above based on an embodiment, but it goes without saying that the present invention is not limited to this embodiment and can be variously modified within a scope that does not depart from the gist thereof. For example, the primary pressure gradient microphone according to the present invention can also be understood as a configuration up to an adding means such as an inversion adding circuit. In addition, the relationship between $\tau 1$, $\tau 2$, and d is not limited to FIG. 10 and can be modified as necessary.

(0036) The present invention can be effectively applied to a wide range of devices for the noise cancellation of input sound waves in an environment in which noise arrives from every direction, such as a voice input microphone of a hands-free telephone unit or a car navigation system.

(0037)

(EFFECT OF THE INVENTION) The effects achieved by representative inventions disclosed in this application may be described simply as follows.

(0038) Specifically, a primary pressure gradient microphone having two types of directional characteristics can be realized with two or three omnidirectional microphone units. Therefore, the cost of the primary pressure gradient microphone can be reduced, and the microphone can be reduced in size.

(0039) By using two omnidirectional microphone units or disposing four omnidirectional microphone units radially to form a primary pressure gradient microphone, the configuration can be considered to be one in which two microphones of different directional characteristics (main microphone and reference microphone) are disposed at physically the same position – in other words, two microphones of different directional characteristics (main microphone and reference microphone) can be disposed in the same sound field – so an excellent noise cancelling effect can be achieved.

(0040) When three omnidirectional microphone units are used, the configuration cannot strictly be considered to be one in which two microphones of different directional characteristics (main microphone and reference microphone) are disposed at physically the same position, but because the second microphone unit and the third

microphone unit can be disposed near one another without any space therebetween, a noise cancelling effect superior to that of a conventional configuration can be achieved, and the number of omnidirectional microphone units can be reduced by one.

(0041) In addition, when two microphones of different directional characteristics (main microphone and reference microphone) are configured with separate omnidirectional microphone units, a relatively good noise cancelling effect can be achieved by disposing the omnidirectional microphone units constituting the main microphone adjacent to the omnidirectional microphone units constituting the reference microphone.

(0042) As described above, it is possible to realize a primary pressure gradient microphone with which a sound from a target sound source in a specific direction can be acquired with good S/N in an environment in which noise is generated from every direction.

(BRIEF DESCRIPTION OF THE DRAWINGS)

FIG. 1 is a circuit diagram of a primary pressure gradient microphone according to the present invention in which two types of directional characteristics are realized using two omnidirectional microphone units.

FIG. 2 is an explanatory diagram of the configuration of the main microphone.

FIG. 3 is an explanatory diagram illustrating the directional characteristics of the main microphone.

FIG. 4 is an explanatory diagram of the configuration of the reference microphone.

FIG. 5 is an explanatory diagram illustrating the directional characteristics of the reference microphone.

FIG. 6 is an explanatory diagram for qualitatively understanding the directionality of the main microphone.

FIG. 7 is an explanatory diagram for qualitatively understanding the directionality of the reference microphone.

FIG. 8 is a circuit diagram of a primary pressure gradient microphone using three omnidirectional microphone units.

FIG. 9 is a circuit diagram of a primary pressure gradient microphone using four omnidirectional microphone units.

FIG. 10 is an explanatory diagram illustrating the overall directional characteristics of the primary pressure gradient microphone illustrated in FIG. 1.

FIG. 11 is an explanatory diagram illustrating the directional characteristics of the primary pressure gradient microphone illustrated in FIG. 9.

FIG. 12 is a circuit diagram of another primary pressure gradient microphone using four omnidirectional microphone units.

FIG. 13 is a schematic explanatory diagram of a microphone in which two types of directional characteristics are realized by disposing two sets of primary pressure gradient microphones, each built into a casing, at a distance from one another.

FIG. 14 is an explanatory diagram illustrating the directional characteristics of the primary pressure gradient microphone illustrated in FIG. 13.

(EXPLANATION OF SYMBOLS)

M1, M2, M3, M4: Omnidirectional microphone units
1, 2: Delay circuits
3, 4: Inversion adding circuits
5, 6: A/D converters
7: Adaptive filter
8: Digital adder
9: D/A converter

FIG. 1

FIG. 1

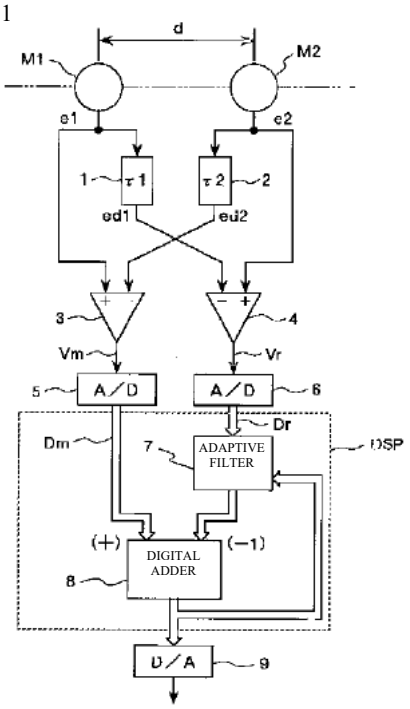

FIG. 2

FIG. 2

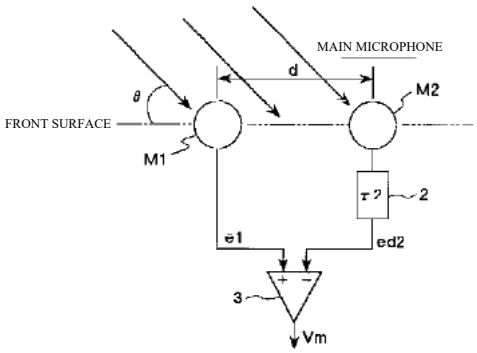

FIG. 3 FIG. 4 FIG. 13

FIG. 3

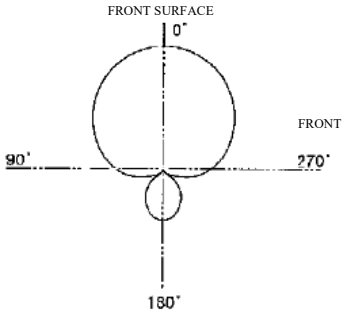

FIG. 4

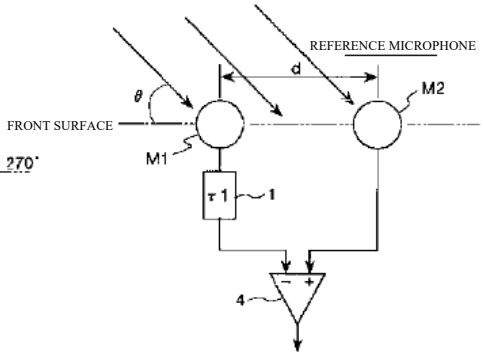

FIG. 13

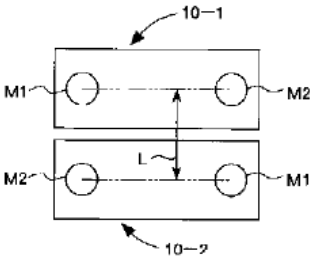

FIG. 5 FIG. 6

FIG. 5

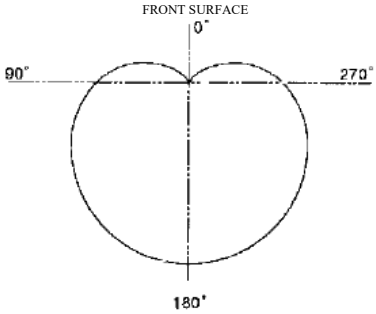

FIG. 6

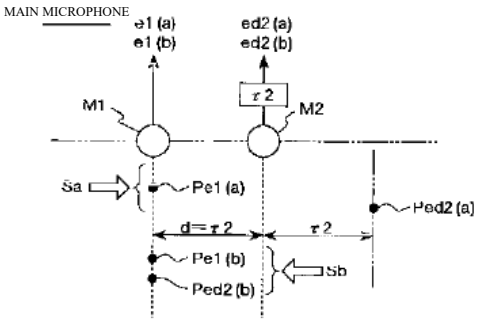

FIG. 7 FIG. 8

FIG. 7

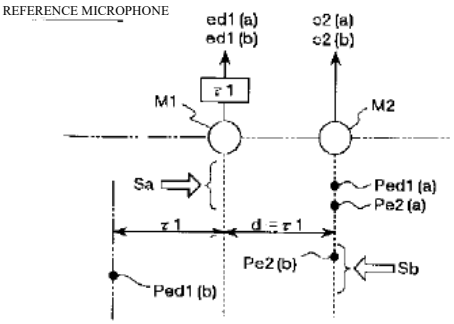

FIG. 8

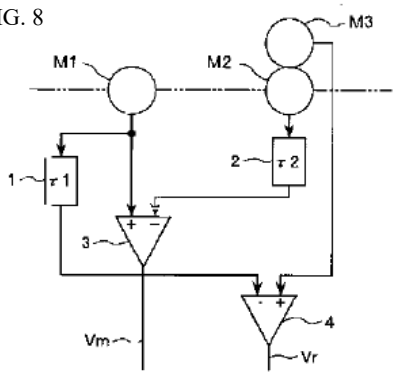

FIG. 9

FIG. 9

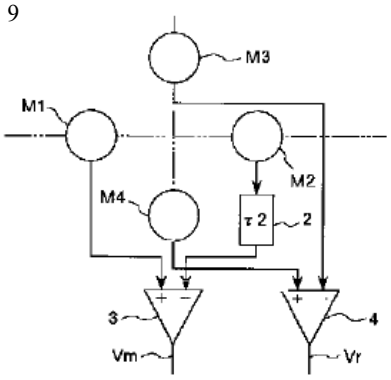

FIG. 10

FIG. 10

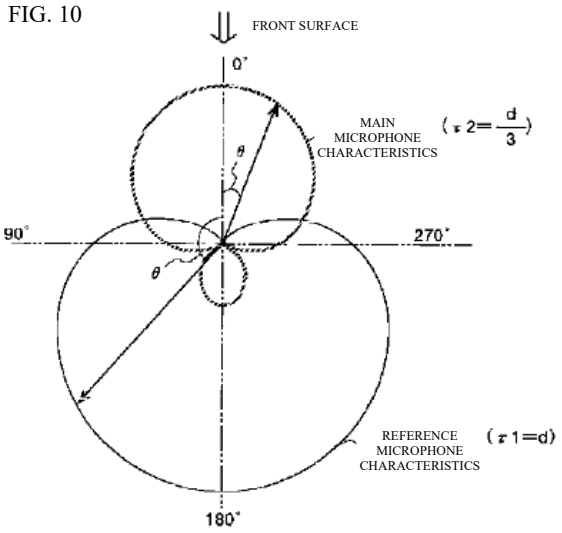

FIG. 11

FIG. 11

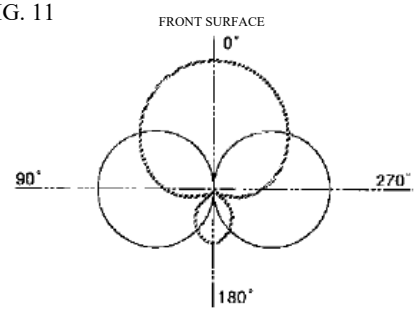

FIG. 12

FIG. 12

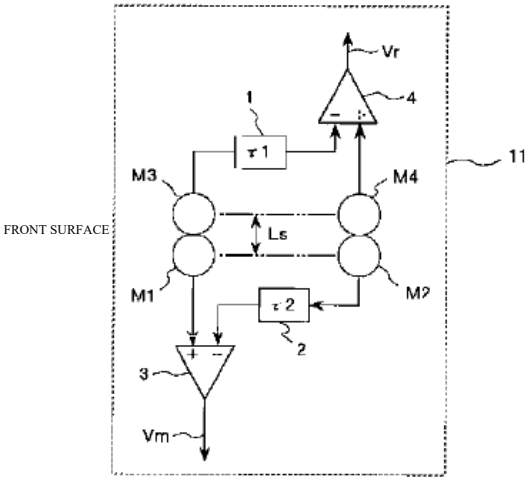

FIG. 14

FIG. 14

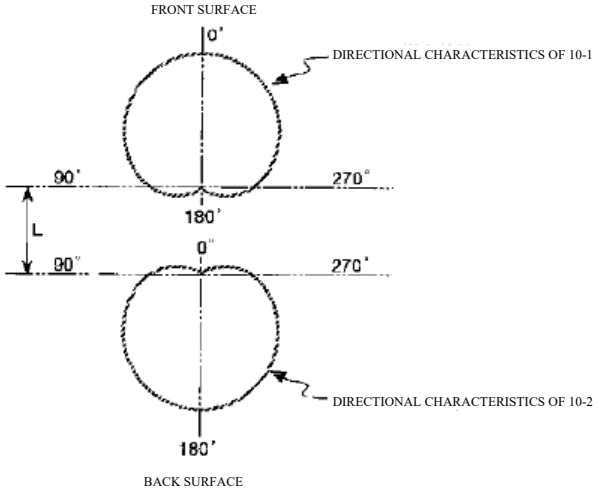
FRONT SURFACE
0°
DIRECTIONAL CHARACTERISTICS OF 10-1
90°
270°
180°
L
0°
90°
270°
DIRECTIONAL CHARACTERISTICS OF 10-2
180°
BACK SURFACE

DECLARATION OF TRANSLATOR

I, Brian Toth, declare as follows:

1. I am over 21 years of age and am competent to make this declaration.

2. I am a professional translator with TransPerfect. I am a native speaker of English. I am fluent in Japanese. I have 22, years of experience translating Japanese into English.

3. I translated the document "JPH1118186A" from Japanese into English.

4. I certify that the attached translation of the document "JPH1118186A" is, to the best of my knowledge, a true and accurate translation from Japanese into English.

5. In signing this declaration, I understand that the translation and this declaration may be filed as evidence in a contested case. I acknowledge that I may be subject to cross-examination within the United States of America.

6. I declare that all statements made herein of my knowledge are true and that all statements made on information and belief are believed to be true; and further, that these statements were made with knowledge that willful false statements and the like so made are punishable by fine or imprisonment, or both, under 18 U.S.C. § 1001.

7. I declare under penalty of perjury under the laws of the United States of America that the foregoing is true and correct.

Executed on February 18, 2022.

By: _____

Brian Toth