FUNDAMENTALS OF ACOUSTICS

Fourth Edition

LAWRENCE E. KINSLER
Late Professor Emeritus
Naval Postgraduate School

AUSTIN R. FREY
Late Professor Emeritus
Naval Postgraduate School

ALAN B. COPPENS
Black Mountain
North Carolina

JAMES V. SANDERS
Associate Professor of Physics
Naval Postgraduate School

John Wiley & Sons, Inc.
New York Chichester Weinheim Brisbane Singapore Toronto

Sony v. Jawbone
U.S. Patent No. 8,503,691
Sony Ex. 1015

Fundamentals of Acoustics

FOURTH EDITION

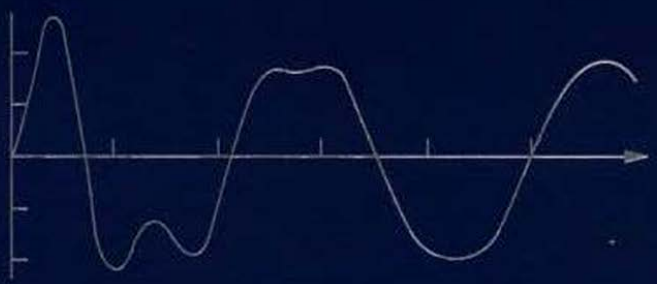

Lawrence E. Kinsler

Austin R. Frey

Alan B. Coppens

James V. Sanders

GLOSSARY OF SYMBOLS

This list identifies some symbols that are not necessarily defined every time they appear in the text.

a	acceleration; absorption coefficient (dB per distance); Sabine absorptivity
a_E	random-incidence energy absorption coefficient
A	sound absorption
AG	array gain
b	loss per bounce; decay parameter
$b(\theta, \phi)$	beam pattern
B	magnetic field; susceptance
BL	bottom loss
$\mathcal{B}$	adiabatic bulk modulus
$\mathcal{B}_T$	isothermal bulk modulus
c	speed of sound
c_g	group speed
c_p	phase speed
C	electrical capacitance; acoustic compliance; heat capacity
$C_{\mathcal{P}}$	heat capacity at constant pressure
$c_{\mathcal{P}}$	specific heat at constant pressure
C_V	heat capacity at constant volume
c_V	specific heat at constant volume
$CNEL$	community noise equivalent level (dBA)
d	detection index
d'	detectability index
D	directivity; dipole strength
DI	directivity index
DNL	detected noise level
DT	detection threshold
$\mathcal{D}$	diffraction factor
e	specific energy
E	total energy
E_k	kinetic energy
E_p	potential energy
EL	echo level
$\mathcal{E}$	time-averaged energy density
$\mathcal{E}_i$	instantaneous energy density
f	instantaneous force; frequency (Hz)
f_r	resonance frequency
f_u, f_l	upper, lower half-power frequencies
F	peak force amplitude; frequency (kHz)
F_e	effective force amplitude
g	spectral density of a transient function; sound-speed gradient; acceleration of gravity; aperture function
G	conductance
$\mathcal{G}$	adiabatic shear modulus
h	specific enthalpy
$H(\theta, \phi)$	directional factor

With grateful thanks to our wives,
Linda Miles Coppens and Marilyn Sanders,
for their unflagging support and gentle patience.

ACQUISITIONS EDITOR Stuart Johnson

MARKETING MANAGER Sue Lyons

PRODUCTION EDITOR Barbara Russiello

SENIOR DESIGNER Kevin Murphy

ELECTRONIC ILLUSTRATIONS Publication Services, Inc.

This book was set in 10/12 Palatino by Publication Services, Inc. and printed and bound by Hamilton Press. The cover was printed by Hamilton Press.

This book is printed on acid-free paper. ∞

Copyright 2000© John Wiley & Sons, Inc. All rights reserved.

No part of this publication may be reproduced, stored in a retrieval system or transmitted in any form or by any means, electronic, mechanical, photocopying, recording, scanning or otherwise, except as permitted under Sections 107 or 108 of the 1976 United States Copyright Act, without either the prior written permission of the Publisher, or authorization through payment of the appropriate per-copy fee to the Copyright Clearance Center, 222 Rosewood Drive, Danvers, MA 01923, (508) 750-8400, fax (508) 750-4470. Requests to the Publisher for permission should be addressed to the Permissions Department, John Wiley & Sons, Inc., 605 Third Avenue, New York, NY 10158-0012, (212) 850-6011, fax (212) 850-6008, E-mail: PERMREQ@WILEY.COM. To order books or for customer service please call 1(800)-225-5945.

Library of Congress Cataloging-in-Publication Data:
Fundamentals of acoustics / Lawrence E. Kinsler. . .[et al.].–4th ed.
p.cm.
Includes index.
1. Sound-waves. 2. Sound–Equipment and supplies. 3. Architectural acoustics. I. Kinsler, Lawrence E.

QC243 .F86 2000 534–dc21 99-049667
ISBN 0-471-84789-5
Printed in the United States of America
10 9 8 7 6 5 4 3 2

PREFACE

Credit for the longevity of this work belongs to the original two authors, Lawrence Kinsler and Austin Frey, both of whom have now passed away. When Austin entrusted us with the preparation of the third edition, our goal was to update the text while maintaining the spirit of the first two editions. The continued acceptance of this book in advanced undergraduate and introductory graduate courses suggests that this goal was met. For this fourth edition, we have continued this updating and have added new material.

Considerable effort has been made to provide more homework problems. The total number has been increased from about 300 in the previous editions to over 700 in this edition. The availability of desktop computers now makes it possible for students to investigate many acoustic problems that were previously too tedious and time consuming for classroom use. Included in this category are investigations of the limits of validity of approximate solutions and numerically based studies of the effects of varying the various parameters in a problem. To take advantage of this new tool, we have added a great number of problems (usually marked with a suffix "C") where the student may be expected to use or write computer programs. Any convenient programming language should work, but one with good graphing software will make things easier. Doing these problems should develop a greater appreciation of acoustics and its applications while also enhancing computer skills.

The following additional changes have been made in the fourth edition: (1) As an organizational aid to the student, and to save instructors some time, equations, figures, tables, and homework problems are all now numbered by chapter and section. Although appearing somewhat more cumbersome, we believe the organizational advantages far outweigh the disadvantages. (2) The discussion of transmitter and receiver sensitivity has been moved to Chapter 5 to facilitate early incorporation of microphones in any accompanying laboratory. (3) The chapters on absorption and sources have been interchanged so that the discussion of beam patterns precedes the more sophisticated discussion of absorption effects. (4) Derivations from the diffusion equation of the effects of thermal conductivity on the attenuation of waves in the free field and in pipes have been added to the chapter on absorption. (5) The discussions of normal modes and waveguides

have been collected into a single chapter and have been expanded to include normal modes in cylindrical and spherical cavities and propagation in layers. (6) Considerations of transient excitations and orthonormality have been enhanced. (7) Two new chapters have been added to illustrate how the principles of acoustics can be applied to topics that are not normally covered in an undergraduate course. These chapters, on finite-amplitude acoustics and shock waves, are not meant to survey developments in these fields. They are intended to introduce the relevant underlying acoustic principles and to demonstrate how the fundamentals of acoustics can be extended to certain more complicated problems. We have selected these examples from our own areas of teaching and research. (8) The appendixes have been enhanced to provide more information on physical constants, elementary transcendental functions (equations, tables, and figures), elements of thermodynamics, and elasticity and viscosity.

New materials are frequently at a somewhat more advanced level. As in the third edition, we have indicated with asterisks in the Contents those sections in each chapter that can be eliminated in a lower-level introductory course. Such a course can be based on the first five or six chapters with selected topics from the seventh and eighth. Beyond these, the remaining chapters are independent of each other (with only a couple of exceptions that can be dealt with quite easily), so that topics of interest can be chosen at will.

With the advent of the handheld calculator, it was no longer necessary for textbooks to include tables for trigonometric, exponential, and logarithmic functions. While the availability of desktop calculators and current mathematical software makes it unnecessary to include tables of more complicated functions (Bessel functions, etc.), until handheld calculators have these functions programmed into them, tables are still useful. However, students are encouraged to use their desktop calculators to make fine-grained tables for the functions found in the appendixes. In addition, they will find it useful to create tables for such things as the shock parameters in Chapter 17.

From time to time we will be posting updated information on our web site: www.wiley.com/college/kinsler. At this site you will also be able to send us messages. We welcome you to do so.

We would like to express our appreciation to those who have educated us, corrected many of our misconceptions, and aided us: our coauthors Austin R. Frey and Lawrence E. Kinsler; our mentors James Mcgrath, Edwin Ressler, Robert T. Beyer, and A. O. Williams; our colleagues O. B. Wilson, Anthony Atchley, Steve Baker, and Wayne M. Wright; and our many students, including Lt. Thomas Green (who programmed many of the computer problems in Chapters 1–15) and L. Miles.

Finally, we offer out heartfelt thanks for their help, cooperation, advice, and guidance to those at John Wiley & Sons who were instrumental in preparing this edition of the book: physics editor Stuart Johnson, production editor Barbara Russiello, designer Kevin Murphy, editorial program assistants Cathy Donovan and Tom Hempstead, as well as to Christina della Bartolomea who copy edited the manuscript and Gloria Hamilton who proofread the galleys.

Alan B. Coppens
Black Mountain, NC

James V. Sanders
Monterey, CA

CONTENTS

CHAPTER 1
FUNDAMENTALS OF VIBRATION

1.1 Introduction 1
1.2 The Simple Oscillator 2
1.3 Initial Conditions 3
1.4 Energy of Vibration 5
1.5 Complex Exponential Method of Solution 5
1.6 Damped Oscillations 8
1.7 Forced Oscillations 11
1.8 Transient Response of an Oscillator 13
1.9 Power Relations 14
1.10 Mechanical Resonance 15
1.11 Mechanical Resonance and Frequency 17
*1.12 Equivalent Electrical Circuits for Oscillators 19
1.13 Linear Combinations of Simple Harmonic Vibrations 22
1.14 Analysis of Complex Vibrations by Fourier's Theorem 24
*1.15 The Fourier Transform 26

CHAPTER 2
TRANSVERSE MOTION: THE VIBRATING STRING

2.1 Vibrations of Extended Systems 37
2.2 Transverse Waves on a String 37
2.3 The One-Dimensional Wave Equation 38
2.4 General Solution of the Wave Equation 39
2.5 Wave Nature of the General Solution 40
2.6 Initial Values and Boundary Conditions 41
2.7 Reflection at a Boundary 41
2.8 Forced Vibration of an Infinite String 42
2.9 Forced Vibration of a String of Finite Length 46
(a) The Forced, Fixed String 46
*(b) The Forced, Mass-Loaded String 49
*(c) The Forced, Resistance-Loaded String 51

2.10 Normal Modes of the Fixed, Fixed String 52
(a) A Plucked String 54
(b) A Struck String 54
*2.11 Effects of More Realistic Boundary Conditions on the Freely Vibrating String 54
(a) The Fixed, Mass-Loaded String 55
(b) The Fixed, Resistance-Loaded String 56
(c) The Fixed, Fixed Damped String 57
2.12 Energy of Vibration of a String 58
*2.13 Normal Modes, Fourier's Theorem, and Orthogonality 60
2.14 Overtones and Harmonics 62

CHAPTER 3
VIBRATIONS OF BARS

3.1 Longitudinal Vibrations of a Bar 68
3.2 Longitudinal Strain 68
3.3 Longitudinal Wave Equation 69
3.4 Simple Boundary Conditions 71
3.5 The Free, Mass-Loaded Bar 73
*3.6 The Freely Vibrating Bar: General Boundary Conditions 75
*3.7 Forced Vibrations of a Bar: Resonance and Antiresonance Revisited 76
*3.8 Transverse Vibrations of a Bar 78
*3.9 Transverse Wave Equation 80
*3.10 Boundary Conditions 82
(a) Clamped End 82
(b) Free End 82
(c) Simply Supported End 82
*3.11 Bar Clamped at One End 83
*3.12 Bar Free at Both Ends 84
*3.13 Torsional Waves on a Bar 86

CHAPTER 4
THE TWO-DIMENSIONAL WAVE EQUATION: VIBRATIONS OF MEMBRANES AND PLATES

4.1 Vibrations of a Plane Surface 91
4.2 The Wave Equation for a Stretched Membrane 91
4.3 Free Vibrations of a Rectangular Membrane with Fixed Rim 93
4.4 Free Vibrations of a Circular Membrane with Fixed Rim 95
4.5 Symmetric Vibrations of a Circular Membrane with Fixed Rim 98
*4.6 The Damped, Freely Vibrating Membrane 99
*4.7 The Kettledrum 100
*4.8 Forced Vibration of a Membrane 102
*4.9 The Diaphragm of a Condenser Microphone 103
*4.10 Normal Modes of Membranes 104
(a) The Rectangular Membrane with Fixed Rim 105
(b) The Circular Membrane with Fixed Rim 106
*4.11 Vibration of Thin Plates 107

CHAPTER 5
THE ACOUSTIC WAVE EQUATION AND SIMPLE SOLUTIONS

5.1 Introduction 113
5.2 The Equation of State 114
5.3 The Equation of Continuity 116
5.4 The Simple Force Equation: Euler's Equation 117
5.5 The Linear Wave Equation 119
5.6 Speed of Sound in Fluids 120
5.7 Harmonic Plane Waves 121
5.8 Energy Density 124
5.9 Acoustic Intensity 125
5.10 Specific Acoustic Impedance 126
5.11 Spherical Waves 127
5.12 Decibel Scales 130
*5.13 Cylindrical Waves 133
*5.14 Rays and Waves 135
(a) The Eikonal and Transport Equations 135
(b) The Equations for the Ray Path 137
(c) The One-Dimensional Gradient 138
(d) Phase and Intensity Considerations 139
*5.15 The Inhomogeneous Wave Equation 140
*5.16 The Point Source 142

CHAPTER 6
REFLECTION AND TRANSMISSION

6.1 Changes in Media 149
6.2 Transmission from One Fluid to Another: Normal Incidence 150
6.3 Transmission Through a Fluid Layer: Normal Incidence 152
6.4 Transmission from One Fluid to Another: Oblique Incidence 155
*6.5 Normal Specific Acoustic Impedance 160
*6.6 Reflection from the Surface of a Solid 160
(a) Normal Incidence 161
(b) Oblique Incidence 161
*6.7 Transmission Through a Thin Partition: The Mass Law 162
6.8 Method of Images 163
(a) Rigid Boundary 163
(b) Pressure Release Boundary 165
(c) Extensions 165

CHAPTER 7
RADIATION AND RECEPTION OF ACOUSTIC WAVES

7.1 Radiation from a Pulsating Sphere 171
7.2 Acoustic Reciprocity and the Simple Source 172
7.3 The Continuous Line Source 176
7.4 Radiation from a Plane Circular Piston 179
(a) Axial Response 179
(b) Far Field 181
7.5 Radiation Impedance 184
(a) The Circular Piston 185
(b) The Pulsating Sphere 187
7.6 Fundamental Properties of Transducers 188
(a) Directional Factor and Beam Pattern 188
(b) Beam Width 188
(c) Source Level 188

(d) Directivity 189
(e) Directivity Index 190
(f) Estimates of Radiation Patterns 191
*7.7 Directional Factors of Reversible Transducers 193
*7.8 The Line Array 195
*7.9 The Product Theorem 199
*7.10 The Far Field Multipole Expansion 199
*7.11 Beam Patterns and the Spatial Fourier Transform 203

CHAPTER 8
ABSORPTION AND ATTENUATION OF SOUND

8.1 Introduction 210
8.2 Absorption from Viscosity 211
8.3 Complex Sound Speed and Absorption 213
8.4 Absorption from Thermal Conduction 215
8.5 The Classical Absorption Coefficient 217
8.6 Molecular Thermal Relaxation 218
8.7 Absorption in Liquids 224
*8.8 Viscous Losses at a Rigid Wall 228
*8.9 Losses in Wide Pipes 230
(a) Viscosity 230
(b) Thermal Conduction 232
(c) The Combined Absorption Coefficient 233
*8.10 Attenuation in Suspensions 234
(a) Fogs 235
(b) Resonant Bubbles in Water 238

CHAPTER 9
CAVITIES AND WAVEGUIDES

9.1 Introduction 246
9.2 Rectangular Cavity 246
*9.3 The Cylindrical Cavity 249
*9.4 The Spherical Cavity 250
9.5 The Waveguide of Constant Cross Section 252
*9.6 Sources and Transients in Cavities and Waveguides 256
*9.7 The Layer as a Waveguide 259
*9.8 An Isospeed Channel 261
*9.9 A Two-Fluid Channel 261

CHAPTER 10
PIPES, RESONATORS, AND FILTERS

10.1 Introduction 272
10.2 Resonance in Pipes 272
10.3 Power Radiation from Open-Ended Pipes 275
10.4 Standing Wave Patterns 276
10.5 Absorption of Sound in Pipes 277
10.6 Behavior of the Combined Driver–Pipe System 280
10.7 The Long Wavelength Limit 283
10.8 The Helmholtz Resonator 284
10.9 Acoustic Impedance 286
(a) Lumped Acoustic Impedance 287
(b) Distributed Acoustic Impedance 287
10.10 Reflection and Transmission of Waves in a Pipe 288
10.11 Acoustic Filters 291
(a) Low-Pass Filters 291
(b) High-Pass Filters 293
(c) Band-Stop Filters 295

CHAPTER 11
NOISE, SIGNAL DETECTION, HEARING, AND SPEECH

11.1 Introduction 302

11.2 Noise, Spectrum Level, and Band Level 302

11.3 Combining Band Levels and Tones 306

*11.4 Detecting Signals in Noise 307

*11.5 Detection Threshold 310

(a) Correlation Detection 311

(b) Energy Detection 311

*11.6 The Ear 312

11.7 Some Fundamental Properties of Hearing 315

(a) Thresholds 316

(b) Equal Loudness Level Contours 318

(c) Critical Bandwidth 318

(d) Masking 320

(e) Beats, Combination Tones, and Aural Harmonics 321

(f) Consonance and the Restored Fundamental 322

11.8 Loudness Level and Loudness 324

11.9 Pitch and Frequency 326

*11.10 The Voice 327

CHAPTER 12
ARCHITECTURAL ACOUSTICS

12.1 Sound in Enclosures 333

12.2 A Simple Model for the Growth of Sound in a Room 334

12.3 Reverberation Time—Sabine 336

12.4 Reverberation Time—Eyring and Norris 338

12.5 Sound Absorption Materials 340

12.6 Measurement of the Acoustic Output of Sound Sources in Live Rooms 342

12.7 Direct and Reverberant Sound 342

12.8 Acoustic Factors in Architectural Design 343

(a) The Direct Arrival 343

(b) Reverberation at 500 Hz 343

(c) Warmth 345

(d) Intimacy 347

(e) Diffusion, Blend, and Ensemble 348

*12.9 Standing Waves and Normal Modes in Enclosures 348

(a) The Rectangular Enclosure 349

(b) Damped Normal Modes 349

(c) The Growth and Decay of Sound from a Source 351

(d) Frequency Distribution of Enclosure Resonances 353

CHAPTER 13
ENVIRONMENTAL ACOUSTICS

13.1 Introduction 359

13.2 Weighted Sound Levels 360

13.3 Speech Interference 362

13.4 Privacy 363

13.5 Noise Rating Curves 364

13.6 The Statistical Description of Community Noise 365

13.7 Criteria for Community Noise 369

*13.8 Highway Noise 371

*13.9 Aircraft Noise Rating 373

*13.10 Community Response to Noise 374

13.11 Noise-Induced Hearing Loss 375

13.12 Noise and Architectural Design 378
13.13 Specification and Measurement of Sound Isolation 379
13.14 Recommended Isolation 382
13.15 Design of Partitions 382
(a) Single-Leaf Partitions 383
(b) Double-Leaf Partitions 385
(c) Doors and Windows 387
(d) Barriers 387

CHAPTER 14 TRANSDUCTION

14.1 Introduction 390
14.2 The Transducer as an Electrical Network 390
(a) Reciprocal Transducers 392
(b) Antireciprocal Transducers 393
14.3 Canonical Equations for Two Simple Transducers 394
(a) The Electrostatic Transducer (Reciprocal) 394
(b) The Moving-Coil Transducer (Antireciprocal) 396
14.4 Transmitters 398
(a) Reciprocal Source 399
(b) Antireciprocal Source 403
14.5 Moving-Coil Loudspeaker 406
*14.6 Loudspeaker Cabinets 411
(a) The Enclosed Cabinet 411
(b) The Open Cabinet 412
(c) Bass-Reflex Cabinet 412
*14.7 Horn Loudspeakers 414
14.8 Receivers 416
(a) Microphone Directivity 416
(b) Microphone Sensitivities 417
(c) Reciprocal Receiver 418
(d) Antireciprocal Receiver 418
14.9 Condenser Microphone 418
14.10 Moving-Coil Electrodynamic Microphone 420
14.11 Pressure-Gradient Microphones 423
*14.12 Other Microphones 425
(a) The Carbon Microphone 425
(b) The Piezoelectric Microphone 426
(c) Fiber Optic Receivers 427
*14.13 Calibration of Receivers 428

CHAPTER 15 UNDERWATER ACOUSTICS

15.1 Introduction 435
15.2 Speed of Sound in Seawater 435
15.3 Transmission Loss 436
15.4 Refraction 438
15.5 The Mixed Layer 440
15.6 The Deep Sound Channel and the Reliable Acoustic Path 444
15.7 Surface Interference 446
15.8 The Sonar Equations 448
(a) Passive Sonar 448
(b) Active Sonar 449
15.9 Noise and Bandwidth Considerations 450
(a) Ambient Noise 450
(b) Self-Noise 451
(c) Doppler Shift 453
(d) Bandwidth Considerations 454
15.10 Passive Sonar 455
(a) An Example 456
15.11 Active Sonar 456
(a) Target Strength 457
(b) Reverberation 459

(c) Detection Threshold for Reverberation-Limited Performance 463
(d) An Example 464
*15.12 Isospeed Shallow-Water Channel 465
(a) Rigid Bottom 467
(b) Slow Bottom 467
(c) Fast Bottom 467
*15.13 Transmission Loss Models for Normal-Mode Propagation 468
(a) Rigid Bottom 470
(b) Fast Bottom 470

CHAPTER 16
SELECTED NONLINEAR ACOUSTIC EFFECTS

16.1 Introduction 478
16.2 A Nonlinear Acoustic Wave Equation 478
16.3 Two Descriptive Parameters 480
(a) The Discontinuity Distance 481
(b) The Goldberg Number 483
16.4 Solution by Perturbation Expansion 483
16.5 Nonlinear Plane Waves 484
(a) Traveling Waves in an Infinite Half-Space 484
(b) Traveling Waves in a Pipe 485
(c) Standing Waves in a Pipe 487
16.6 A Parametric Array 488

CHAPTER 17
SHOCK WAVES AND EXPLOSIONS

17.1 Shock Waves 494
(a) The Rankine–Hugoniot Equations 495
(b) Stagnation and Critical Flow 496
(c) Normal Shock Relations 497
(d) The Shock Adiabat 498
17.2 The Blast Wave 500
17.3 The Reference Explosion 501
(a) The Reference Chemical Explosion 501
(b) The Reference Nuclear Explosion 502
17.4 The Scaling Laws 503
17.5 Yield and the Surface Effect 504

APPENDIXES

A1 Conversion Factors and Physical Constants 508
A2 Complex Numbers 509
A3 Circular and Hyperbolic Functions 510
A4 Some Mathematical Functions 510
(a) Gamma Function 510
(b) Bessel Functions, Modified Bessel Functions, and Struve Functions 511
(c) Spherical Bessel Functions 513
(d) Legendre Functions 513
A5 Bessel Functions: Tables, Graphs, Zeros, and Extrema 514
(a) Table: Bessel and Modified Bessel Functions of the First Kind of Orders 0, 1,and 2 514

(b) Graphs: Bessel Functions of the First Kind of Orders 0, 1, 2, and 3 516
(c) Zeros: Bessel Functions of the First Kind, $J_m(j_{mn}) = 0$ 516
(d) Extrema: Bessel Functions of the First Kind, $J'_m(j_{mn}) = 0$ 516
(e) Table: Spherical Bessel Functions of the First Kind of Orders 0, 1, and 2 517
(f) Graphs: Spherical Bessel Functions of the First Kind of Orders 0, 1, and 2 518
(g) Zeros: Spherical Bessel Functions of the First Kind, $j_m(\zeta_{mn}) = 0$ 518
(h) Extrema: Spherical Bessel Functions of the First Kind, $j'_m(\zeta_{mn}) = 0$ 518

A6 Table of Directivities and Impedance Functions for a Piston 519

A7 Vector Operators 520
(a) Cartesian Coordinates 520
(b) Cylindrical Coordinates 520
(c) Spherical Coordinates 521

A8 Gauss's Theorem and Green's Theorem 521
(a) Gauss's Theorem in Two- and Three-Dimensional Coordinate Systems 521
(b) Green's Theorem 521

A9 A Little Thermodynamics and the Perfect Gas 522
(a) Energy, Work, and the First Law 522
(b) Enthalpy, Entropy, and the Second Law 523
(c) The Perfect Gas 524

A10 Tables of Physical Properties of Matter 526
(a) Solids 526
(b) Liquids 527
(c) Gases 528

A11 Elasticity and Viscosity 529
(a) Solids 529
(b) Fluids 531

A12 The Greek Alphabet 533

ANSWERS TO ODD-NUMBERED PROBLEMS 534

INDEX 543

Chapter 7

RADIATION AND RECEPTION OF ACOUSTIC WAVES

7.1 RADIATION FROM A PULSATING SPHERE

The acoustic source simplest to analyze is a pulsating sphere—a sphere whose radius varies sinusoidally with time. While pulsating spheres are of little practical importance, their analysis is useful for they serve as the prototype for an important class of sources referred to as *simple sources*.

In a medium that is infinite, homogeneous, and isotropic, a pulsating sphere will produce an outgoing spherical wave

$$\mathbf{p}(r,t) = (\mathbf{A}/r)e^{j(\omega t - kr)} \tag{7.1.1}$$

where $\mathbf{A}$ is determined by an appropriate boundary condition.

Consider a sphere of average radius a, vibrating radially with complex speed $U_0 \exp(j\omega t)$, where the displacement of the surface is much less than the radius, $U_0/\omega \ll a$. The acoustic pressure of the fluid in contact with the sphere is given by (7.1.1) evaluated at $r = a$. (This is consistent with the small-amplitude approximation of linear acoustics.) The radial component of the velocity of the fluid in contact with the sphere is found using the specific acoustic impedance for the spherical wave (5.11.10) also evaluated at $r = a$,

$$\mathbf{z}(a) = \rho_0 c \cos\theta_a \, e^{j\theta_a} \tag{7.1.2}$$

where $\cot\theta_a = ka$. The pressure at the surface of the source is then

$$\mathbf{p}(a,t) = \rho_0 c U_0 \cos\theta_a \, e^{j(\omega t - ka + \theta_a)} \tag{7.1.3}$$

Comparing (7.1.3) with (7.1.1) gives

$$\mathbf{A} = \rho_0 c U_0 a \cos\theta_a \, e^{j(ka+\theta_a)} \tag{7.1.4}$$

so the pressure at any distance $r > a$ is

$$\mathbf{p}(r,t) = \rho_0 c U_0 (a/r) \cos\theta_a \, e^{j[\omega t - k(r-a) + \theta_a]} \tag{7.1.5}$$

The acoustic intensity, found from (5.11.20), is

$$I = \tfrac{1}{2}\rho_0 c U_0^2 (a/r)^2 \cos^2\theta_a \tag{7.1.6}$$

If the radius of the source is small compared to a wavelength, $\theta_a \to \pi/2$ and the specific acoustic impedance near the surface of the sphere is strongly reactive. (This reactance is a symptom of the strong radial divergence of the acoustic wave near a small source and represents the storage and release of energy because successive layers of the fluid must stretch and shrink circumferentially, altering the outward displacement. This inertial effect manifests itself in the mass-like reactance of the specific acoustic impedance.) In this long wavelength limit the pressure

$$\mathbf{p}(r,t) = j\rho_0 c U_0 (a/r) ka\, e^{j(\omega t - kr)} \qquad ka \ll 1 \tag{7.1.7}$$

is nearly $\pi/2$ out of phase with the particle speed (pressure and particle speed are not *exactly* $\pi/2$ out of phase, since that would lead to a vanishing intensity), and the acoustic intensity is

$$I = \tfrac{1}{2}\rho_0 c U_0^2 (a/r)^2 (ka)^2 \qquad ka \ll 1 \tag{7.1.8}$$

For constant U_0 this intensity is proportional to the square of the frequency and depends on the fourth power of the radius of the source. Thus, we see that sources small with respect to a wavelength are inherently poor radiators of acoustic energy.

In the next section, it will be shown that all *simple sources*, no matter what their shapes, will produce the same acoustic field as a pulsating sphere provided the wavelength is greater than the dimensions of the source and the sources have the same *volume velocity*.

7.2 ACOUSTIC RECIPROCITY AND THE SIMPLE SOURCE

Acoustic reciprocity is a powerful concept that can be used to obtain some very general results. Let us begin by deriving one of the more commonly encountered statements of acoustic reciprocity.

Consider a space occupied by two sources, as suggested by Fig. 7.2.1. By changing which source is active and which passive, it is possible to set up different sound fields. Choose two situations having the same frequency and denote them as 1 and 2. Establish a volume V of space that does not itself contain any sources but bounds them. Let the surface of this volume be S. The volume V and the surface S remain the same for both situations. Let the velocity potential be $\mathbf{\Phi}_1$ for situation 1 and $\mathbf{\Phi}_2$ for situation 2. Green's theorem (see Appendix A8) gives the general relation

$$\int_S (\mathbf{\Phi}_1 \nabla \mathbf{\Phi}_2 - \mathbf{\Phi}_2 \nabla \mathbf{\Phi}_1) \cdot \hat{n}\, dS = \int_V (\mathbf{\Phi}_1 \nabla^2 \mathbf{\Phi}_2 - \mathbf{\Phi}_2 \nabla^2 \mathbf{\Phi}_1)\, dV \tag{7.2.1}$$

where $\hat{n}$ is the unit outward normal to S. Since the volume does not include any sources, and since both velocity potentials are for excitations of the same

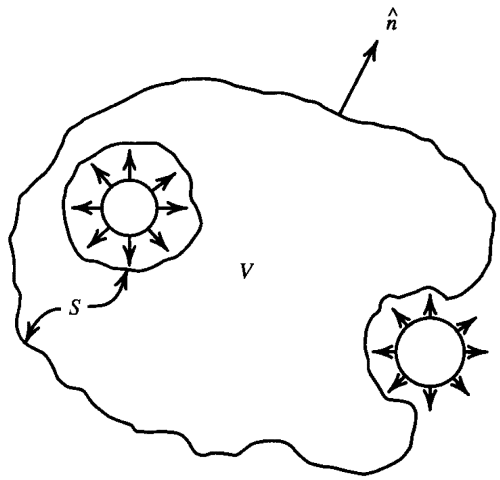

Figure 7.2.1 Geometry used in deriving the theorem of acoustical reciprocity.

frequency, the wave equation yields

$$\begin{aligned} \nabla^2\Phi_1 &= -k^2\Phi_1 \\ \nabla^2\Phi_2 &= -k^2\Phi_2 \end{aligned} \tag{7.2.2}$$

so that the right side of (7.2.1) vanishes identically throughout V. Furthermore, recall that the pressure is $\mathbf{p} = -j\omega\rho_0\Phi$ and the particle velocity for irrotational motion is $\vec{\mathbf{u}} = \nabla\Phi$. Substitution of these expressions into the left side of (7.2.1) gives

$$\int_S (\mathbf{p}_1\vec{\mathbf{u}}_2 \cdot \hat{n} - \mathbf{p}_2\vec{\mathbf{u}}_1 \cdot \hat{n})\, dS = 0 \tag{7.2.3}$$

This is one form of the *principle of acoustic reciprocity*. This principle states that, for example, if the locations of a small source and a small receiver are interchanged in an unchanging environment, the received signal will remain the same.

To obtain information about simple sources, let us develop a more restrictive but simpler form of (7.2.3). Assume that some portion of S is removed a great distance from the enclosed source. In any real case there is always some absorption of sound by the medium so the intensity at this surface will decrease faster than $1/r^2$. Since the area of the surface increases as r^2, the product of intensity and area vanishes in the limit $r \to \infty$. In addition, if each of the remaining portions of S is either (1) perfectly rigid so that $\vec{\mathbf{u}} \cdot \hat{n} = 0$, (2) pressure release so that $\mathbf{p} = 0$, or (3) normally reacting so that $\mathbf{p}/(\vec{\mathbf{u}} \cdot \hat{n}) = \mathbf{z}_n$, then the surface integrals over these surfaces must vanish. Under these conditions, (7.2.3) reduces to an integral over only those portions of S that correspond to sources active in situations 1 or 2:

$$\int_{sources} (\mathbf{p}_1\vec{\mathbf{u}}_2 \cdot \hat{n} - \mathbf{p}_2\vec{\mathbf{u}}_1 \cdot \hat{n})\, dS = 0 \tag{7.2.4}$$

This simple result will now be applied to develop some important general properties of sources that are small compared to a wavelength.

Consider a region of space in which there are two irregularly shaped sources, as shown in Fig. 7.2.2. Let source A be active and source B be perfectly rigid in

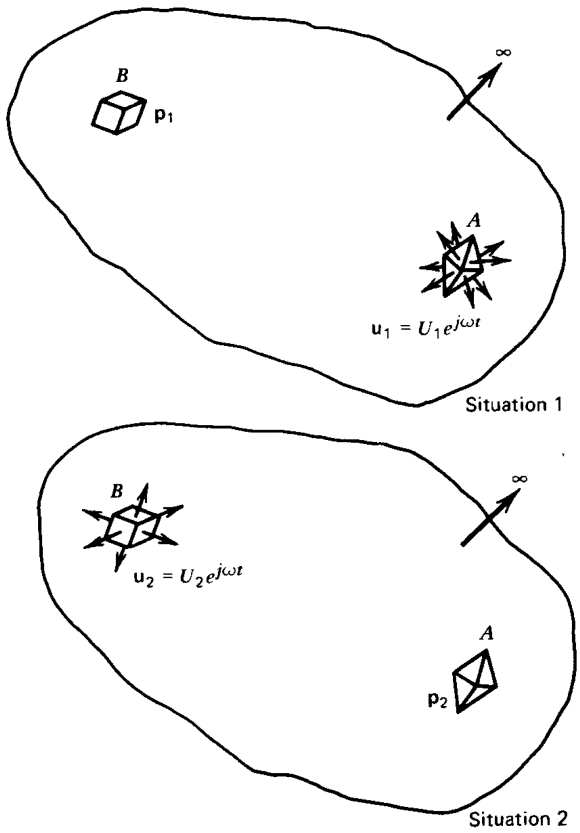

Figure 7.2.2 Reciprocity theorem applied to simple sources.

situation 1, and vice versa in situation 2. If we define $\mathbf{p}_1$ as the pressure at B when source A is active with $\vec{\mathbf{u}}_1$ the velocity of its radiating element, and $\mathbf{p}_2$ as the pressure at A when source B is active with $\vec{\mathbf{u}}_2$ the velocity of its radiating element, application of (7.2.4) yields

$$\int_{S_A} \mathbf{p}_2 \vec{\mathbf{u}}_1 \cdot \hat{n}\, dS = \int_{S_B} \mathbf{p}_1 \vec{\mathbf{u}}_2 \cdot \hat{n}\, dS \tag{7.2.5}$$

If the sources are small with respect to a wavelength and several wavelengths apart, then the pressure is uniform over each source so that

$$\frac{1}{\mathbf{p}_1} \int_{S_A} \vec{\mathbf{u}}_1 \cdot \hat{n}\, dS = \frac{1}{\mathbf{p}_2} \int_{S_B} \vec{\mathbf{u}}_2 \cdot \hat{n}\, dS \tag{7.2.6}$$

Assume that the moving elements of a source have complex vector displacements

$$\vec{\boldsymbol{\xi}} = \vec{\boldsymbol{\Xi}} e^{j(\omega t + \phi)} \tag{7.2.7}$$

where $\vec{\boldsymbol{\Xi}}$ gives the magnitude and direction of the displacement and ϕ the temporal phase of each element. If $\hat{n}$ is the unit outward normal to each element dS of the surface, the source will displace a volume of the surrounding medium

$$\mathbf{V} = \int_S \vec{\boldsymbol{\Xi}} e^{j(\omega t + \phi)} \cdot \hat{n}\, dS = V e^{j(\omega t + \theta)} \tag{7.2.8}$$

where $\mathbf{V}$ is the *complex volume displacement*, V the generalization of the volume displacement amplitude discussed in Section 4.5, and θ the accumulated phase over the surface of the element. The time derivative $\partial\mathbf{V}/\partial t$, the *complex volume velocity*, defines the *complex source strength* $\mathbf{Q}$

$$\mathbf{Q}e^{j\omega t} = \frac{\partial \mathbf{V}}{\partial t} = \int_S \vec{\mathbf{u}} \cdot \hat{n}\, dS \tag{7.2.9}$$

where $\vec{\mathbf{u}} = \partial\vec{\boldsymbol{\xi}}/\partial t$ is the complex velocity distribution of the source surface. The complex source strength of the pulsating sphere has only a real part,

$$\mathbf{Q} = Q = 4\pi a^2 U_0 \tag{7.2.10}$$

Substitution of (7.2.9) and $\mathbf{p} = \mathbf{P}(r)\exp[j(\omega t - kr)]$ into (7.2.6) gives

$$\mathbf{Q}_1/\mathbf{P}_1(r) = \mathbf{Q}_2/\mathbf{P}_2(r) \tag{7.2.11}$$

which shows that the ratio of the source strength to the pressure amplitude at distance r from the source is the same for all simple sources (at the same frequency) in the same surroundings. This allows us to calculate the pressure field of any irregular simple source since it must be identical with the pressure field produced by a small pulsating sphere of the same source strength. If the simple sources are in free space, (7.1.7) and (7.2.10) show that the ratio of (7.2.11) is

$$\mathbf{Q}/\mathbf{P}(r) = -j\,2\lambda r/\rho_0 c \tag{7.2.12}$$

This is the *free field reciprocity factor.*

Rewriting (7.1.7) with the help of (7.2.10) results in

$$\mathbf{p}(r,t) = \tfrac{1}{2} j\rho_0 c(Q/\lambda r)e^{j(\omega t - kr)} \tag{7.2.13}$$

which, from the above, must be true for all simple sources. The pressure amplitude is

$$P = \tfrac{1}{2}\rho_0 c Q/\lambda r \qquad \text{(simple source)} \tag{7.2.14}$$

and the intensity is

$$I = \tfrac{1}{8}\rho_0 c(Q/\lambda r)^2 \tag{7.2.15}$$

Integration of the intensity over a sphere centered at the source gives the power radiated,

$$\Pi = \tfrac{1}{2}\pi\rho_0 c(Q/\lambda)^2 \tag{7.2.16}$$

Another case of practical interest is that of a simple source mounted on or very close to a rigid plane boundary. If the dimensions of the boundary are much greater than a wavelength of sound, the boundary can be considered a plane of infinite extent. This kind of boundary is termed a *baffle.* As shown in Section

6.8, the pressure field in the half-space occupied by the source will be twice that generated by the source (with the same source strength) in free space,

$$P = \rho_0 c Q/\lambda r \qquad \text{(baffled simple source)} \tag{7.2.17}$$

The intensity is increased by a factor of four,

$$I = \tfrac{1}{2}\rho_0 c(Q/\lambda r)^2 \tag{7.2.18}$$

and integration of the intensity over a hemisphere (there is no acoustic penetration of the space behind the baffle) gives twice the radiated power,

$$\Pi = \pi\rho_0 c(Q/\lambda)^2 \tag{7.2.19}$$

A doubling of the power output of the source may seem surprising but results from the fact that the source has the same source strength in both cases: the source face is moving with the same velocity in both cases, but in the baffled case it is working into twice the force and therefore must expend twice the power to maintain its own motion in the presence of the doubled pressure.

7.3 THE CONTINUOUS LINE SOURCE

As an example of a distribution of point sources used to describe an extended source, consider a long, thin cylindrical source of length L and radius a. This configuration, suggested in Fig. 7.3.1, is termed a *continuous line source.* Let the surface vibrate radially with speed $U_0 \exp(j\omega t)$. Consider the source to be made up of a large number of cylinders of length dx. Each of these elements can be considered an unbaffled simple source of strength $dQ = U_0\, 2\pi a\, dx$. Each generates the increment of pressure given by (7.2.13) with r replaced by the distance r' from

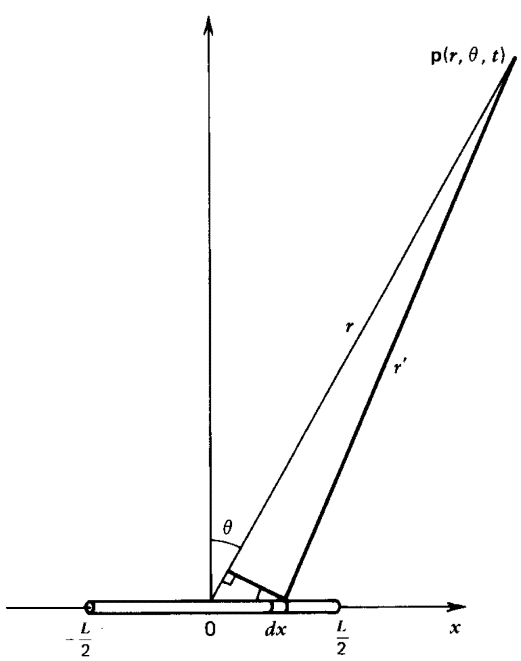

Figure 7.3.1 The far field acoustic field at (r, θ) of a continuous line source of length L and radius a is found by summing the contributions of simple sources of length dx and radius a.

the element to the field point at (r, θ). The total pressure is found by integrating $d\mathbf{p}$ over the length of the source,

$$\mathbf{p}(r,\theta,t) = \frac{j}{2}\rho_0 c U_0 ka \int_{-L/2}^{L/2} \frac{1}{r'} e^{j(\omega t - kr')} dx \tag{7.3.1}$$

The acoustic field close to the source is complicated, but a simple expression can be obtained in the *far field approximation*. Under the assumption $r \gg L$, the denominator of the integrand can be replaced by its approximate value r, which amounts to making very small errors in the amplitudes of the acoustic fields at (r, θ) generated by each of the simple sources. In the exponent, however, this simplification cannot always be made because the relative phases of the elements will be very strong functions of angle when kL approaches or exceeds unity. Then the more accurate approximation $r' \approx r - x \sin\theta$ must be used, and the integral takes the form

$$\mathbf{p}(r,\theta,t) = \frac{j}{2}\rho_0 c U_0 \frac{ka}{r} e^{j(\omega t - kr)} \int_{-L/2}^{L/2} e^{jkx\sin\theta} dx \tag{7.3.2}$$

Evaluation is immediate,

$$\mathbf{p}(r,\theta,t) = \frac{j}{2}\rho_0 c U_0 \frac{a}{r} kL \left(\frac{\sin\left(\frac{1}{2}kL\sin\theta\right)}{\frac{1}{2}kL\sin\theta} \right) e^{j(\omega t - kr)} \tag{7.3.3}$$

The acoustic pressure amplitude in the far field can be written

$$\boxed{P(r,\theta) = P_{ax}(r) H(\theta)} \tag{7.3.4}$$

where

$$H(\theta) = \left| \frac{\sin v}{v} \right| \qquad v = \tfrac{1}{2}kL\sin\theta \tag{7.3.5}$$

is the *directional factor* and

$$P_{ax}(r) = \tfrac{1}{2}\rho_0 c U_0 (a/r) kL \tag{7.3.6}$$

is the amplitude of the *far field axial pressure.*

Separating the far field pressure amplitude into one factor that depends only on angle and has maximum value of unity on the *acoustic axis* and another that depends only on the distance from the source is common practice in describing the sound fields of complicated sources. Note that in the far field the axial pressure is proportional to $1/r$, as for a simple source. This is a feature common to all acoustic sources.

The behavior of $(\sin v)/v$ is shown in Fig. 7.3.2. This function is known as the *sinc function* or the *zeroth order spherical Bessel function of the first kind.* The corresponding *beam pattern* $b(\theta) = 20 \log H(\theta)$ is plotted in Fig. 7.3.3 for the case $kL = 24$. There are *nodal surfaces* (cones in the present case) at angles where $H(\theta) = 0$, for which $\frac{1}{2}kL\sin\theta_n = \pm n\pi$, with $n = 1, 2, 3, \ldots$. These nodal surfaces are separated by *lobes*

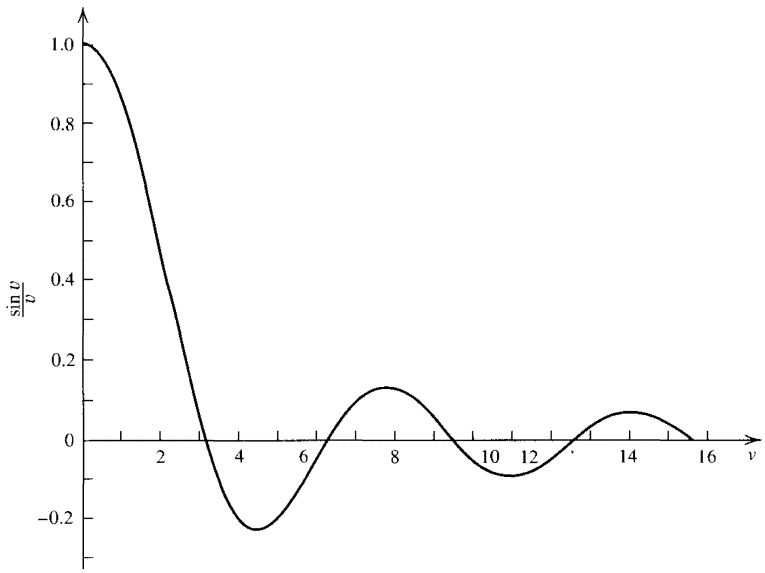

Figure 7.3.2 Functional behavior of $(\sin v)/v$.

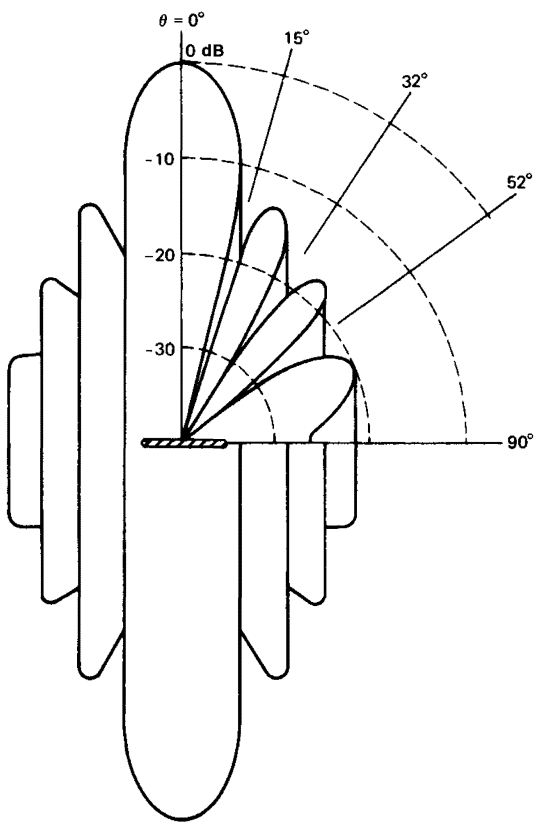

Figure 7.3.3 Beam pattern $b(\theta)$ for a continuous line source of length L radiating sound of wave number k with $kL = 24$.

where the acoustic energy is nonzero. Most of the acoustic energy is projected in the *major lobe,* contained within the angles given by $n = 1$ and centered on a plane perpendicular to the line source. The amplitudes of the *minor lobes* are less than unity and tend to decrease away from this plane. Clearly, the larger the value of kL the more narrowly directed will be the major lobe and the greater the number of minor lobes.

Note that the pressure, when expressed in terms of the source strength $Q = U_0\, 2\pi a L$, becomes

$$\mathbf{p}(r,\theta,t) = \frac{j}{2}\rho_0 c \frac{Q}{\lambda r}\frac{\sin v}{v} e^{j(\omega t - kr)} \tag{7.3.7}$$

Comparison with (7.2.13) shows that the pressure field is the product of that generated by a simple source of source strength Q and a directional factor $\sin v/v$.

7.4 RADIATION FROM A PLANE CIRCULAR PISTON

An acoustic source of practical interest is the plane circular piston, which is the model for a number of sources, including loudspeakers, open-ended organ pipes, and ventilation ducts. Consider a piston of radius a mounted on a flat rigid baffle of infinite extent. Let the radiating surface of the piston move uniformly with speed $U_0 \exp(j\omega t)$ normal to the baffle. The geometry and coordinates are sketched in Fig. 7.4.1.

The pressure at any field point can be obtained by dividing the surface of the piston into infinitesimal elements, each of which acts as a baffled simple source of strength $dQ = U_0\, dS$. Since the pressure generated by one of these sources is given by (7.2.17), the total pressure is

$$\mathbf{p}(r,\theta,t) = j\rho_0 c \frac{U_0}{\lambda}\int_S \frac{1}{r'} e^{j(\omega t - kr')}\, dS \tag{7.4.1}$$

where the surface integral is taken over the region $\sigma \le a$. While this integral is difficult to solve for a general field point, closed-form solutions are possible for two regions: (a) along a line perpendicular to the face of the piston and passing through its center (the acoustic axis), and (b) at sufficiently large distances, in the *far field.*

(a) Axial Response

The field along the acoustic axis (the z axis) is relatively simple to calculate. With reference to Fig. 7.4.1, we have

$$\mathbf{p}(r,0,t) = j\rho_0 c\, \frac{U_0}{\lambda} e^{j\omega t}\int_0^a \frac{\exp\left(-jk\sqrt{r^2+\sigma^2}\right)}{\sqrt{r^2+\sigma^2}} 2\pi\sigma\, d\sigma \tag{7.4.2}$$

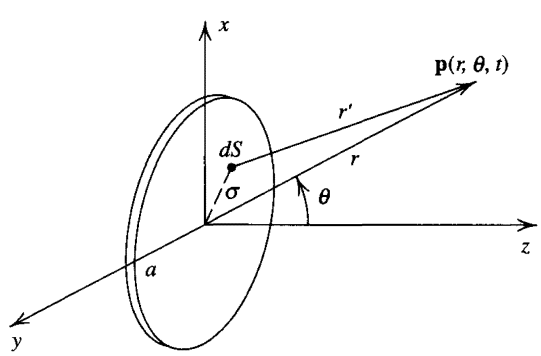

Figure 7.4.1 Geometry used in deriving the acoustic field of a baffled circular plane piston of radius a radiating sound of wave number k.

The integrand is a perfect differential,

$$\frac{\sigma \exp\left(-jk\sqrt{r^2+\sigma^2}\right)}{\sqrt{r^2+\sigma^2}} = -\frac{d}{d\sigma}\left(\frac{\exp\left(-jk\sqrt{r^2+\sigma^2}\right)}{jk}\right) \tag{7.4.3}$$

so the complex acoustic pressure is

$$\mathbf{p}(r,0,t) = \rho_0 c\, U_0 \left\{1 - \exp\left[-jk\left(\sqrt{r^2+a^2} - r\right)\right]\right\} e^{j(\omega t - kr)} \tag{7.4.4}$$

The pressure amplitude on the axis of the piston is the magnitude of the above expression,

$$P(r,0) = 2\rho_0 c U_0 \left|\sin\left\{\tfrac{1}{2}kr\left[\sqrt{1+(a/r)^2} - 1\right]\right\}\right| \tag{7.4.5}$$

For $r/a \gg 1$, the square root can be simplified to

$$\sqrt{1+(a/r)^2} \approx 1 + \tfrac{1}{2}(a/r)^2 \tag{7.4.6}$$

If also $r/a > ka/2$, the pressure amplitude on the axis has asymptotic form

$$P_{ax}(r) = \tfrac{1}{2}\rho_0 c U_0 (a/r) ka \tag{7.4.7}$$

which reveals the expected spherical divergence at sufficiently large distances. (The inequality $r/a > ka/2$ can be rewritten as $r > \pi a^2/\lambda$. In general, the quantity S/λ, where S is the moving area of the source, is called the *Rayleigh length*.)

Study of (7.4.5) reveals that the axial pressure exhibits strong interference effects, fluctuating between 0 and $2\rho_0 c U_0$ as r ranges between 0 and ∞. These extremes of pressure occur for values of r satisfying

$$\tfrac{1}{2}kr\left[\sqrt{1+(a/r)^2} - 1\right] = m\pi/2 \qquad m = 0, 1, 2, \ldots \tag{7.4.8}$$

Solution of the above for the values of r at the extrema yields

$$r_m/a = a/m\lambda - m\lambda/4a \tag{7.4.9}$$

Moving in toward the source from large r, one encounters the first local maximum in axial pressure at a distance r_1 given by

$$r_1/a = a/\lambda - \lambda/4a \tag{7.4.10}$$

For still smaller r, the pressure amplitude falls to a local minimum at r_2 given by

$$r_2/a = a/2\lambda - \lambda/2a \tag{7.4.11}$$

and then continues to fluctuate until the face of the piston is reached. A sketch of this behavior is shown in Fig. 7.4.2.

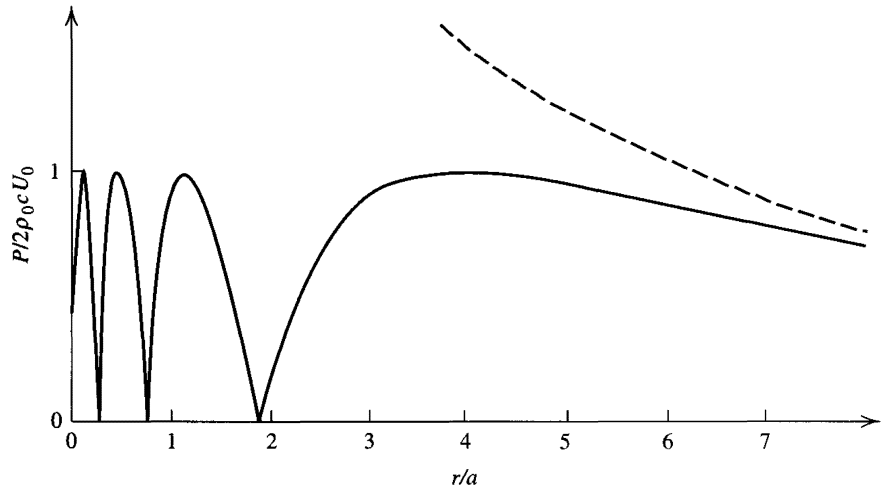

Figure 7.4.2 Axial pressure amplitude for a baffled circular plane piston of radius a radiating sound of wave number k with $ka = 8\pi$. Solid line is calculated from the exact theory. Dashed line is the far field approximation extrapolated into the near field. For this case, the far field approximation is accurate only for distances beyond about seven piston radii.

For $r > r_1$ the axial pressure decreases monotonically, approaching an asymptotic $1/r$ dependence. For $r < r_1$ the axial pressure displays strong interference effects, suggesting that the acoustic field close to the piston is complicated. The distance r_1 serves as a convenient demarcation between the complicated *near field* found close to the source and the simpler *far field* found at large distances from the source. The quantity r_1 has physical meaning only if the ratio a/λ is large enough that $r_1 > 0$. Indeed, if $a = \lambda/2$, then $r_1 = 0$ and there is no near field. At still lower frequencies the radiation from the piston approaches that of a simple source.

(b) Far Field

To aid in the evaluation of the far field, additional coordinates are introduced as indicated in Fig. 7.4.3. Let the x and y axes be oriented so the field point (r, θ) lies in the x-z plane. This allows the piston surface to be divided into an array of continuous line sources of differing lengths, each parallel to the y axis, so the field point is on the acoustic axis of each line source. The far field radiation pattern is found by imposing the restriction $r \gg a$ so the contribution to the field point from each of the line sources is simply its far field axial pressure. Since each line

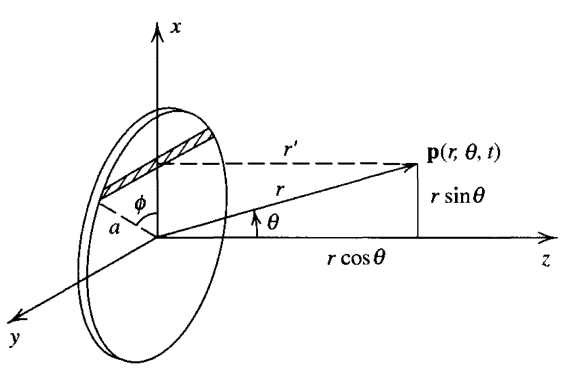

Figure 7.4.3 Geometry used in deriving the far field at (r, θ) of a baffled circular plane piston of radius a.

is of length $2a\sin\phi$ and width dx, the source strength from one such source is $dQ = 2U_0 a\sin\phi\, dx$ and the incremental pressure $d\mathbf{p}$ for this *baffled* source is, from (7.3.7),

$$d\mathbf{p} = j\rho_0 c\frac{U_0}{\pi r'}ka\sin\phi\, e^{j(\omega t-kr')}\, dx \tag{7.4.12}$$

For $r \gg a$, the value of r' is well approximated by

$$r' \approx r + \Delta r = r - a\sin\theta\cos\phi \tag{7.4.13}$$

and the acoustic pressure is

$$\mathbf{p}(r,\theta,t) = j\rho_0 c\frac{U_0}{\pi r'}ka\, e^{j(\omega t-kr')}\int_{-a}^{a} e^{jka\sin\theta\cos\phi}\sin\phi\, dx \tag{7.4.14}$$

where $r' \to r$ in the denominator, but $r' = r + \Delta r$ in the phase in accordance with the far field approximation. Using $x = a\cos\phi$, we can convert the integration from dx to $d\phi$:

$$\mathbf{p}(r,\theta,t) = j\rho_0 c\frac{U_0}{\pi}\frac{a}{r}ka\, e^{j(\omega t-kr)}\int_0^{\pi} e^{jka\sin\theta\cos\phi}\sin^2\phi\, d\phi \tag{7.4.15}$$

By symmetry, the imaginary part of the integral vanishes. The real part is tabulated in terms of a Bessel function,

$$\int_0^{\pi}\cos(z\cos\phi)\sin^2\phi\, d\phi = \pi\frac{J_1(z)}{z} \tag{7.4.16}$$

so that

$$\mathbf{p}(r,\theta,t) = \frac{j}{2}\rho_0 c U_0\frac{a}{r}ka\left[\frac{2J_1(ka\sin\theta)}{ka\sin\theta}\right]e^{j(\omega t-kr)} \tag{7.4.17}$$

All the angular dependence is in the bracketed term. Since this term goes to unity as θ goes to 0, we can make the identifications

$$\begin{aligned} |\mathbf{p}(r,\theta)| &= P_{ax}(r)H(\theta) \\ H(\theta) &= \left|\frac{2J_1(v)}{v}\right| \qquad\qquad v = ka\sin\theta \end{aligned} \tag{7.4.18}$$

Note that the axial pressure amplitude is identical with the asymptotic expression (7.4.7). A plot of $2J_1(v)/v$ is given in Fig. 7.4.4, and numerical values are in Appendix A6. It is well worth comparing and contrasting Figs. 7.3.2 and 7.4.4.

The angular dependence of $H(\theta)$ reveals that there are pressure nodes at angles θ_m given by

$$ka\sin\theta_m = j_{1m} \qquad m = 1,2,3,\ldots \tag{7.4.19}$$

where j_{1m} designates the values of the argument of J_1 that reduce this Bessel function to zero, $J_1(j_{1m}) = 0$. (See Appendix A5.) Note that the form of $H(\theta)$ yields

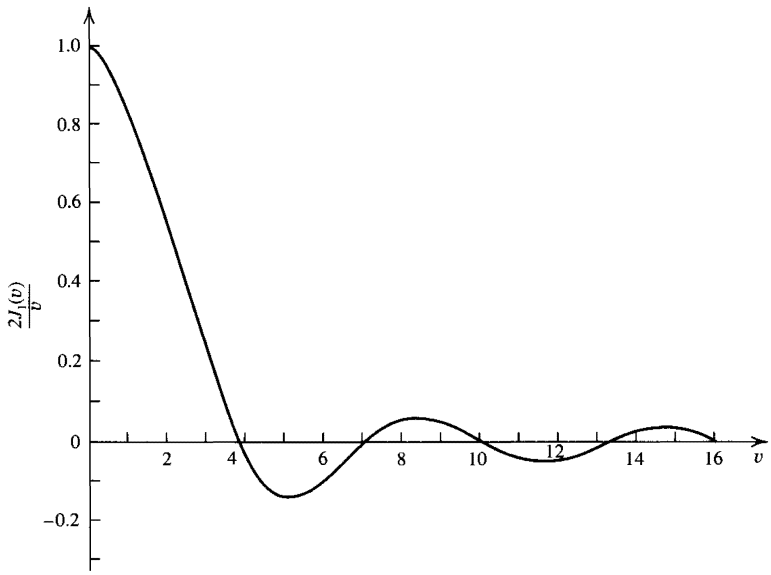

Figure 7.4.4 Functional behavior of $2J_1(v)/v$.

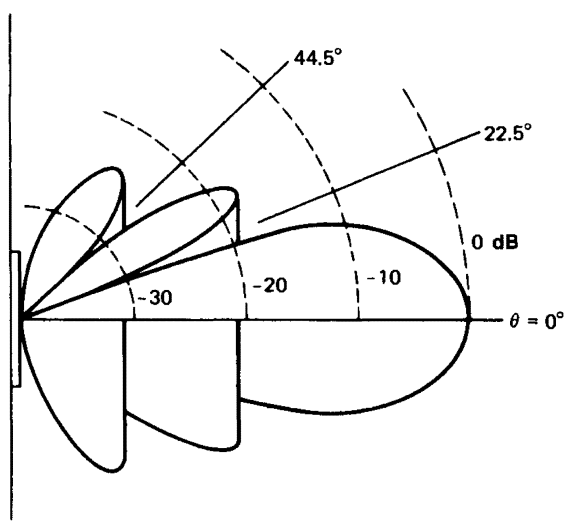

Figure 7.4.5 Beam pattern $b(\theta)$ for a circular plane piston of radius a radiating sound with $ka = 10$.

a maximum along $\theta = 0$. The angles θ_m define conical nodal surfaces with vertices at $r = 0$. Between these surfaces lie pressure lobes, as suggested in Fig. 7.4.5. The relative strengths and angular locations of the acoustic pressure maxima in the lobes are given by the relative maxima of $H(\theta)$. Thus, for constant r, if the intensity level on the axis is set at 0 dB, then the level of the maximum of the first side lobe is about -17.5 dB.

For wavelengths much smaller than the radius of the piston ($ka \gg 1$) the radiation pattern has many side lobes and the angular width of the major lobe is small. If the wavelength is sufficiently large ($ka < 3.83$) only the major lobe will be present. For $ka \ll 1$, the directional factor is nearly unity for all angles, so that the piston becomes a baffled simple source with source strength $Q = \pi a^2 U_0$.

The radiation patterns produced by a piston-type loudspeaker differ to some extent from these idealized patterns for reasons including the following: (1) The

area of the baffle in which the speaker is mounted is finite. At low frequencies the wavelength of the sound may be the same as, or greater than, the linear dimensions of the baffle and the assumption that each element of the piston radiates with hemispherical divergence will be in error. (2) If the loudspeaker cabinet is not closed, the radiation from the back of the speaker may propagate into the region in front of the speaker, resulting in a radiation pattern approximating an acoustic doublet rather than a piston in an infinite baffle. (3) The material of a loudspeaker cone is not perfectly rigid. Driving the speaker at its center establishes velocity amplitudes higher near the center of the cone than near its rim at low frequencies, and at high frequencies the cone may vibrate in standing waves. Under these circumstances, U_0 may become a complex function $\mathbf{U}_0$ of the radial distance σ and angle ϕ. By a suitable choice of the relation between U_0 and σ, a wide variety of radiation patterns can be obtained. Altering radiation patterns with the help of a flexible radiating surface is an important consideration in loudspeaker design. Even in small rooms, loudspeakers that project higher frequencies into narrow major lobes often sound "sharp" or "edgy" to listeners on the acoustic axis and "dull" to listeners off the axis. Broadening the major lobes for higher frequencies helps to counteract this beaming of sound. In small rooms, avoiding high-frequency absorption at the walls is another aid in scattering high-frequency energy. When public address systems are used outdoors or in large auditoriums, scattering is negligible and uniform distribution of higher frequencies must be obtained by employing multidirectional clusters of speakers or groups of speakers aimed in different directions.

7.5 RADIATION IMPEDANCE

In Chapter 2 it was found useful to define the input mechanical impedance of a string as the force applied to the string divided by the resulting speed of the string at the point where the force is applied. If the force is not applied *directly* to the string, but to some device attached to the string, then it was shown in Problem 2.9.2 that the force applied to the device divided by the speed of the device was equal to the mechanical impedance of the device plus the input mechanical impedance of the string as seen by the device. Similarly, in the discussion of acoustic sources it will be useful to express the input mechanical impedance of the source in terms of the *mechanical impedance* of the source radiating into a vacuum and the *radiation impedance* of the acoustic wave propagated into the fluid.

Consider a transmitter whose active face (*diaphragm*) of area S moves with a normal velocity component $\mathbf{u}$ whose magnitude and phase may be a function of position. If $d\mathbf{f}_S$ is the normal component of force on an element dS of the active face, the radiation impedance is

$$\mathbf{Z}_r = \int \frac{d\mathbf{f}_S}{\mathbf{u}} \tag{7.5.1}$$

If the diaphragm has mass m, mechanical resistance R_m, and stiffness s and moves *uniformly* with a normal component of velocity $\mathbf{u}_0 = U_0 \exp(j\omega t) = j\omega\boldsymbol{\xi}_0$ under the externally applied force $\mathbf{f} = F\exp(j\omega t)$, Newton's law of motion yields

$$\mathbf{f} - \mathbf{f}_S - R_m \frac{d\boldsymbol{\xi}_0}{dt} - s\boldsymbol{\xi}_0 = m\frac{d^2\boldsymbol{\xi}_0}{dt^2} \tag{7.5.2}$$

where the force of the diaphragm on the fluid is $\mathbf{f}_S = \mathbf{Z}_r\mathbf{u}_0$. Recalling that $\mathbf{Z}_m = \mathbf{R}_m + j(\omega m - s/\omega)$ and solving for $\mathbf{u}_0$ gives

$$\mathbf{u}_0 = \mathbf{f}/(\mathbf{Z}_m + \mathbf{Z}_r) \tag{7.5.3}$$

Thus, in the presence of fluid loading, the applied force encounters the sum of the mechanical impedance of the source and the radiation impedance. The radiation impedance can be expressed as

$$\mathbf{Z}_r = Z_r e^{j\theta} = R_r + jX_r \tag{7.5.4}$$

where R_r is the *radiation resistance* and X_r is the *radiation reactance*.

A positive R_r will increase the total resistance, increasing the power dissipated by the source by an amount equal to the power radiated into the fluid,

$$\Pi = \frac{1}{T}\int_0^T \mathrm{Re}\{\mathbf{f}_S\}\mathrm{Re}\{\mathbf{u}_0\}\,dt \tag{7.5.5}$$

or

$$\Pi = \tfrac{1}{2}U_0^2 Z_r \cos\theta = \tfrac{1}{2}U_0^2 R_r \tag{7.5.6}$$

The radiation resistance can be found directly from the power radiated into the fluid. For example, use of (7.2.16) and (7.2.19) shows that for a simple source

$$R_r = \rho_0 c(kS)^2/4\pi \qquad \text{(simple source)} \tag{7.5.7}$$

$$R_r = \rho_0 c(kS)^2/2\pi \qquad \text{(baffled simple source)} \tag{7.5.8}$$

where in each case S is the surface area of the relevant source.

A positive X_r will manifest itself as a mass loading that decreases the resonance frequency ω_0 of the oscillator from $\sqrt{s/m}$ to $\sqrt{s/(m + m_r)}$, where $m_r = X_r/\omega$ is the *radiation mass*. The effect of the *radiation mass* can be slight for sources operating in light media such as air, but for a dense fluid like water the decrease in resonance frequency resulting from the presence of the medium may be quite marked.

(a) The Circular Piston

To calculate the radiation impedance of a baffled circular piston of radius a and normal complex velocity $\mathbf{u}_0 = U_0 \exp(j\omega t)$, consider an infinitesimal area dS of the surface of the piston (Fig. 7.5.1) and let $d\mathbf{p}$ be the incremental pressure that the motion of dS produces at some other element of area dS' of the piston. The total pressure $\mathbf{p}$ at dS' can be obtained by integrating (7.4.1) over the surface of the piston,

$$\mathbf{p} = j\rho_0 c\frac{U_0}{\lambda}\int_S \frac{1}{r}e^{j(\omega t - kr)}\,dS \tag{7.5.9}$$

where r is the distance between dS and dS'. The total force $\mathbf{f}_S$ on the piston from the pressure is the integral of $\mathbf{p}$ over dS', so that $\mathbf{f}_S = \int \mathbf{p}\,dS'$. The integrations over dS to get $\mathbf{p}$ and then over dS' to get $\mathbf{f}_S$ include both the force on dS' resulting from the motion of dS and vice versa. But from acoustic reciprocity, these two forces must be the same. Consequently, the result of the double integration is twice what

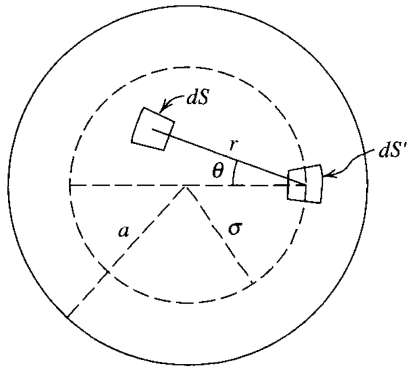

Figure 7.5.1 Surface elements dS and dS' used in obtaining the reaction force on a radiating plane circular piston.

would be obtained if the limits of integration were chosen to include the force between each pair of elements only once. This latter choice of limits leads to a considerable simplification of the problem. Refer to Fig. 7.5.1. With σ the radial distance from the center of the piston to dS', each pair of elements is used only once by integrating over the area of the piston within this circle of radius σ. The maximum distance from dS' to any point within the circle is $2\sigma\cos\theta$, so the entire area within the circle will be covered if we integrate r from 0 to $2\sigma\cos\theta$ and then integrate θ from $-\pi/2$ to $\pi/2$. The integration of dS' is now extended over the entire surface of the piston by setting $dS' = \sigma\, d\sigma\, d\psi$ and integrating ψ from 0 to 2π and then σ from 0 to a. After multiplying this by two, we have our desired expression,

$$\mathbf{f}_S = 2j\rho_0 c\frac{U_0}{\lambda}e^{j\omega t}\int_0^a\int_0^{2\pi}\int_{-\pi/2}^{\pi/2}\int_0^{2\sigma\cos\theta}\sigma e^{-jkr}dr\, d\theta\, d\psi\, d\sigma \tag{7.5.10}$$

The details of the integration are left to Problem 7.5.2. The result for the radiation impedance $\mathbf{Z}_r = \mathbf{f}_S/\mathbf{u}_0$ is

$$\mathbf{Z}_r = \rho_0 cS[R_1(2ka) + jX_1(2ka)] \tag{7.5.11}$$

where $S = \pi a^2$ is the area of the piston face. The *piston resistance function* R_1 and *piston reactance function* X_1 are given by

$$\begin{aligned} R_1(x) &= 1 - \frac{2J_1(x)}{x} = \frac{x^2}{2\cdot 4} - \frac{x^4}{2\cdot 4^2\cdot 6} + \frac{x^6}{2\cdot 4^2\cdot 6^2\cdot 8} - \cdots \\ X_1(x) &= \frac{2\mathbf{H}_1(x)}{x} = \frac{4}{\pi}\left(\frac{x}{3} - \frac{x^3}{3^2\cdot 5} + \frac{x^5}{3^2\cdot 5^2\cdot 7} - \cdots\right) \end{aligned} \tag{7.5.12}$$

with $\mathbf{H}_1(x)$ the *first order Struve function,* described in Appendix A4. Sketches of R_1 and X_1 are shown in Fig. 7.5.2 and numerically tabulated in Appendix A6.

In the low-frequency limit ($ka \ll 1$) the radiation impedance can be approximated by the first terms of the power expansions. The radiation resistance becomes

$$R_r \approx \tfrac{1}{2}\rho_0 cS(ka)^2 \tag{7.5.13}$$

and the radiation reactance becomes

$$X_r \approx (8/3\pi)\rho_0 cSka \tag{7.5.14}$$

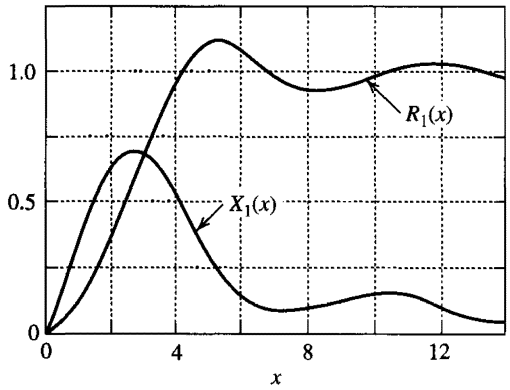

Figure 7.5.2 Radiation resistance and reactance for a plane circular piston of radius a radiating sound of wave number k ($x = 2ka$).

Note that, in the low-frequency limit, the radiation resistance for the piston is identical with that for a baffled simple source of the same surface area S. The low-frequency reactance is that of a mass

$$m_r = X_r/\omega = \rho_0 S(8a/3\pi) \tag{7.5.15}$$

Thus, the piston appears to be loaded with a cylindrical volume of fluid whose cross-sectional area S is that of the piston and whose effective height is $8a/3\pi \approx 0.85a$.

In the high-frequency limit $ka \gg 1$, we have $X_1(2ka) \to (2/\pi)/(ka)$ and $R_1(2ka) \to 1$, so that $Z_r \to R_r \approx S\rho_0 c$. This yields

$$\Pi \approx \tfrac{1}{2}\rho_0 c S U_0^2 \tag{7.5.16}$$

which is the same as the power that would be carried by a plane wave of particle speed amplitude U_0 in a fluid of characteristic impedance $\rho_0 c$ through a cross-sectional area S.

(b) The Pulsating Sphere

The radiation impedance of the pulsating sphere is easily found from (7.1.2) to be

$$\mathbf{Z}_r = \rho_0 c S \cos\theta_a \, e^{j\theta_a} \tag{7.5.17}$$

where $S = 4\pi a^2$ is the surface area of the sphere. For high frequencies ($ka \gg 1$), this reduces to a pure radiation resistance $\mathbf{Z}_r = R_r$, where

$$R_r = \rho_0 c S \tag{7.5.18}$$

For low frequencies ($ka \ll 1$), $\mathbf{Z}_r$ becomes

$$\mathbf{Z}_r \approx \rho_0 c S (ka)^2 + j\rho_0 c S k a \tag{7.5.19}$$

The radiation resistance is much less than the radiation reactance, and the radiation reactance is again like a mass,

$$m_r = X_r/\omega = 3\rho_0 V \tag{7.5.20}$$

where $V = 4\pi a^3/3$ is the volume of the sphere. In the low-frequency limit the radiation mass is three times the mass of the fluid displaced by the sphere.

7.6 FUNDAMENTAL PROPERTIES OF TRANSDUCERS

Several definitions are used to describe the more important aspects of the field without the necessity of displaying the entire radiation pattern.

(a) Directional Factor and Beam Pattern

We have shown that the far field radiation for each of two uncomplicated sources (continuous line and piston) can be expressed as a product of an axial pressure $P_{ax}(r)$ and a directional factor $H(\theta)$. For sources of lower symmetry, this same separation is possible, although the directional factor may depend on two angles, $H(\theta, \phi)$. The directional factor is always normalized so its maximum value is unity, as illustrated by (7.3.5) and (7.4.18). The directions for which $H = 1$ determine the acoustic axes. An acoustic "axis" may be a line, a plane, or a conical surface. The normalized far field pressure along any radial line designated by angles θ and ϕ is simply $H(\theta, \phi)/r$.

The variation of intensity level (or sound pressure level) with angle is the *beam pattern*

$$\begin{aligned} b(\theta, \phi) = 10 \log[I(r, \theta, \phi)/I_{ax}(r)] &= 20 \log[P(r, \theta, \phi)/P_{ax}(r)] \\ &= 20 \log H(\theta, \phi) \end{aligned} \tag{7.6.1}$$

(b) Beam Width

No single definition has been agreed upon for determining the angles that mark the effective extremities of the major lobe. Hence, the criterion must be clearly stated when beam widths are specified. The values of $I(r, \theta, \phi)/I_{ax}(r)$ used to delineate the effective width of a major lobe range from a maximum of 0.5 (down 3 dB or "half-power"), through 0.25 (down 6 dB or "quarter-power"), to a minimum of 0.1 (down 10 dB). As an illustration of the ambiguity that arises if the ratio of intensities is not specified, consider a piston that is radiating sound of wavelength $\lambda = a/4$. The calculated beam widths corresponding to the three ratios given above are 7.4° (down 3 dB), 10.1° (down 6 dB), and 12.9° (down 10 dB), whereas the beam width corresponding to the first null is 17.3°. Even when the outer limit of the major lobe is defined as being down 10 dB relative to the axial level, it is still some 7.5 dB higher than the maximum level of the first minor lobe.

(c) Source Level

A measure of the axial output of a source is the *source level SL*. Assume that the acoustic axis of the source has been determined and the pressure amplitude along this line is measured in the far field (where the pressure varies as $1/r$). The curve of $P_{ax}(r)$ versus $1/r$ can be extrapolated from large r to a position $r = 1$ m from the source to give

$$P_{ax}(1) = \lim_{r \downarrow 1} P_{ax}(r) \tag{7.6.2}$$

[Note that $P_{ax}(1)$ is not necessarily the actual axial pressure at 1 m. It is simply a convenient extrapolation from the far field behavior.] Since $P_{ax}(1)$ is a peak pressure amplitude, it must be reduced to an effective (or rms) value $P_e(1)$ by dividing by $\sqrt{2}$. The source level is then

$$SL(re\ P_{ref}) = 20\ \log[P_e(1)/P_{ref}] \qquad P_e(1) = P_{ax}(1)/\sqrt{2} \tag{7.6.3}$$

where the reference effective pressure P_{ref} is either 1 μPa, 20 μPa, or 1 μbar as discussed in Section 5.12.

(d) Directivity

Given the amplitude $P(r, \theta, \phi)$ of the pressure in the far field, the total radiated power is obtained by integrating the intensity over a sphere enclosing the source,

$$\Pi = \frac{1}{2\rho_0 c}\int_{4\pi} P^2(r, \theta, \phi) r^2\, d\Omega \tag{7.6.4}$$

Recalling that $P(r, \theta, \phi) = P_{ax}(r)H(\theta, \phi)$ and noting that r is constant for the integration, we can write

$$\Pi = \frac{1}{2\rho_0 c} r^2 P_{ax}^2(r) \int_{4\pi} H^2(\theta, \phi)\, d\Omega \tag{7.6.5}$$

For a *simple source* that generates the *same acoustic power,* the pressure amplitude $P_s(r)$ to be found at the distance r is given by

$$\Pi = 4\pi r^2 P_S^2(r)/2\rho_0 c \tag{7.6.6}$$

Clearly, for the same acoustic power the directional source will have greater intensity at a distance r on the acoustic axis than will the simple source. The ratio of these intensities reveals how much more efficiently a directional source concentrates the available acoustic power into a preferred direction. This ratio defines the *directivity* D,

$$D = I_{ax}(r)/I_S(r) = P_{ax}^2(r)/P_S^2(r) \tag{7.6.7}$$

Substitution of (7.6.5) and (7.6.6) into (7.6.7) results in

$$D = 4\pi \Big/ \int_{4\pi} H^2(\theta, \phi)\, d\Omega \tag{7.6.8}$$

Thus, the directivity D of a source is the reciprocal of the average of $H^2(\theta, \phi)$ over solid angle. Now, (7.6.5) becomes

$$\Pi = 4\pi P_e^2(1)/D\rho_0 c \tag{7.6.9}$$

and substitution for $P_e(1)$ into (7.6.3) gives

$$SL(re\ P_{ref}) = 10 \log(D\rho_0 c\Pi/4\pi P_{ref}^2) \tag{7.6.10}$$

(1) CONTINUOUS LINE SOURCE. The directional factor for a continuous line source is (7.3.5). A study of the cylindrical geometry reveals

$$D = 4\pi \Big/ 2\int_0^{\pi/2} H^2(\theta) 2\pi \cos\theta \, d\theta \tag{7.6.11}$$

and the change of variable $v = \frac{1}{2}kL\sin\theta$ gives

$$D = \frac{kL}{2} \Big/ \int_0^{kL/2} \left(\frac{\sin v}{v}\right)^2 dv \tag{7.6.12}$$

If the line is long ($kL \gg 1$), the upper limit can be taken arbitrarily large with little loss in accuracy. The resulting definite integral is known,

$$\int_0^{\infty} \left(\frac{\sin v}{v}\right)^2 dv = \frac{\pi}{2} \tag{7.6.13}$$

so the directivity of a long continuous line source is approximately

$$D \approx kL/\pi = 2L/\lambda \tag{7.6.14}$$

(2) PISTON SOURCE. The directivity of a piston is determined from the directional factor (7.4.18) by

$$D = 4\pi \Big/ \int_0^{\pi/2} \left[\frac{2J_1(ka\sin\theta)}{ka\sin\theta}\right]^2 2\pi \sin\theta \, d\theta \tag{7.6.15}$$

where $2\pi\sin\theta\, d\theta$ is the incremental solid angle $d\Omega$ for this axisymmetric case. While this integral can be evaluated, another approach is used in Problem 7.6.1. The result is

$$D = \frac{(ka)^2}{1 - J_1(2ka)/ka} \tag{7.6.16}$$

For low frequencies ($ka \to 0$), the Bessel function can be replaced by the first two terms of its series expansion, and in this limit $D \to 2$, which is the same as a hemispherical source on an infinite baffle. For high frequencies the Bessel function becomes small and

$$D \approx (ka)^2 \qquad ka \gg 1 \tag{7.6.17}$$

which shows that the piston is highly directive at higher frequencies.

(e) Directivity Index

The *directivity index DI* is given by

$$\boxed{DI = 10\log D} \tag{7.6.18}$$

For water and with a reference pressure of 1 μPa,

$$SL(re\ 1\ \mu Pa) = 10\ \log\ \Pi + DI + 171 \qquad \text{(water)} \tag{7.6.19}$$

where the acoustic power must be in watts. In air, the conventional reference pressure is 20 μPa, and the source level becomes

$$SL(re\ 20\ \mu\text{Pa}) = 10 \log \Pi + DI + 109 \qquad \text{(air)} \tag{7.6.20}$$

The ability of a directional receiver to ignore isotropic noise is determined by the directivity index DI. However, if the noise field has directionality, such as the noise from a busy freeway or noise from distant shipping in the ocean (which tends to arrive from directions close to horizontal), a more general measure, the *array gain AG*, must be introduced. If $N(\theta, \phi)$ is the effective pressure amplitude of the noise arriving from the (θ, ϕ) direction, then the array gain for a directional receiver is

$$AG = 10 \log \left(\frac{\int_{4\pi} |N(\theta, \phi)|^2 \, d\Omega}{\int_{4\pi} |N(\theta, \phi)|^2 H^2(\theta, \phi) \, d\Omega} \right) \tag{7.6.21}$$

The numerator measures the noise power received by an omnidirectional receiver and the denominator measures that received by the directional receiver. In a nonisotropic noise field, the array gain depends on the properties of the field and the orientation of the receiver. If the noise field is isotropic then $N(\theta, \phi)$ is constant for all angles, the argument of the log reduces to (7.6.8), and the array gain becomes identical to the directivity index.

(f) Estimates of Radiation Patterns

For reasonably directive sources of simple geometry, the properties of the radiation fields can be estimated from the size and geometry of the source and the wavelength of the excitation. The source may be one of those previously discussed or may be a mosaic, or array, of such sources. The requirement that the source be reasonably directive is $\lambda \ll L$, where L is the greatest dimension of the source.

(1) Extent of the Near Field. Let r_{max} be the distance from the furthest element of the source and r_{min} the distance from the nearest element to a field point in the far field on the acoustic axis. As the field point approaches the source on the axis, the difference $\Delta r = r_{max} - r_{min}$ will gradually increase above the asymptotic value Δr_∞ at large distances. When the increase approaches a half-wavelength, $r_{max} - r_{min} = \Delta r_\infty - \lambda/2$, then the phases of the signals from the individual points on the source combining at the field point will have shifted sufficiently from those observed in the far field to alter the axial pressure amplitude from P_{ax}. See Fig. 7.6.1 for a flat source. If the greatest extent of the source transverse to the acoustic axis is L, a little geometry shows that the value of r_{min} demarking the beginning of the far field is given roughly by

$$r_{min}/L \sim L/4\lambda \tag{7.6.22}$$

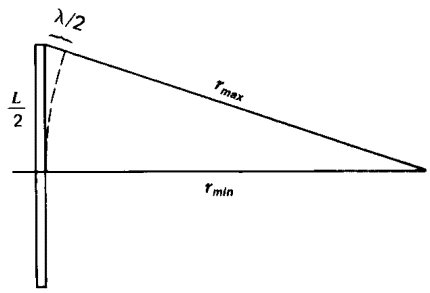

Figure 7.6.1 Geometry used in estimating the extent of the near field of a source of maximum extent L radiating sound of wavelength λ.

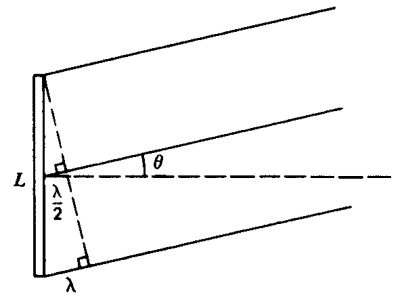

Figure 7.6.2 Geometry used for estimating the beam width for a source of maximum extent L radiating sound of wavelength λ.

(2) Major Lobe Angular Width. The major lobe corresponds to that portion of the far field radiation pattern in which the source elements are phased for maximum constructive interference. As the angle off the acoustic axis increases, destructive interference is increased and the edge of the major lobe is approached. Very approximately, when θ has increased until about half of the elements are shifted in phase by $\pi/2$ with respect to the other half, a nodal surface will be encountered. From the simple one-dimensional example shown in Fig. 7.6.2, it can be seen that this occurs at an angle of about λ/L. Thus, the half-angle subtended by the major lobe can be estimated by

$$\sin\theta_1 \sim \lambda/L \tag{7.6.23}$$

The reader should verify that (7.6.22) and (7.6.23) are in agreement with the quantitative predictions for the circular piston and that (7.6.23) agrees with the major-lobe width calculated for the continuous line source.

For more complicated sources with major dimensions L_1 and L_2 transverse to the acoustic axis, the major lobe will have angular widths $2\theta_{11} \sim 2\lambda/L_1$ in the one direction and $2\theta_{12} \sim 2\lambda/L_2$ in the other.

(3) Estimation of Directivity. Since an exact evaluation of the integral expression (7.6.8) may be too difficult or more accurate than required by the problem at hand, it is useful to be able to estimate the directivity D. If the source is reasonably directive and is designed so the side lobes are considerably weaker than the major lobe, D can be estimated by setting the integrand to unity over the strong central portion of the major lobe and to zero otherwise. The expression for D is

$$\boxed{D = 4\pi/\Omega_{eff}} \tag{7.6.24}$$

Evaluation of D is thus reduced to the geometrical problem of obtaining a good approximation of the effective solid angle Ω_{eff} subtended by the central portion of the major lobe. This reduces to calculating the *effective* angle θ' describing the half-angular beam width of the major lobe. For highly directive sources θ_1 tends to overestimate θ'. A better approximation is to take that portion of the major lobe over which the directional factor H falls from its maximum value of 1 to a value

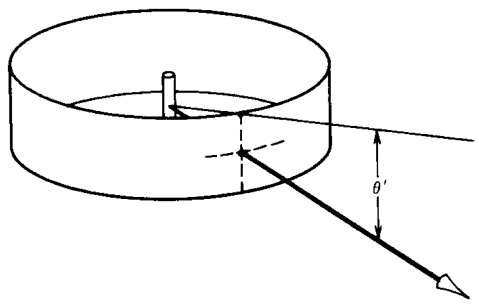

Figure 7.6.3 Area of the unit sphere ensonified by a line-like source at the origin.

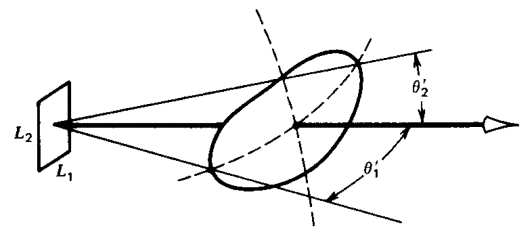

Figure 7.6.4 Area of the unit sphere ensonified by a plane piston source of arbitrary shape.

of 0.5 (quarter-power point) and assume H is unity within that region and zero outside. For the cases studied so far, this means obtaining the value θ' solving $(\sin v)/v \approx \frac{1}{4}$ with $v = \frac{1}{2}kL\sin\theta$. A little numerical estimation gives

$$\theta' \sim 2\theta_1/\pi \tag{7.6.25}$$

For a line-like source, the central portion of the major lobe is distributed over the surface of the unit sphere as shown in Fig. 7.6.3. The height of this belt is approximated by $2\theta'$ and the circumference is 2π, so that $\Omega_{eff} \approx 4\pi\theta'$ and $D \sim 1/\theta'$.

For a piston-like source, the central portion of the major lobe is the roughly elliptical patch shown in Fig. 7.6.4. On the unit sphere, the area of this patch is approximated by $\Omega_{eff} \approx \pi\theta_1'\theta_2'$, where $2\theta_1'$ is the effective angular beam width pertinent to the length L_1 and $2\theta_2'$ is that pertinent to L_2. The resultant directivity is $D \sim 4/\theta_1'\theta_2'$.

Comparison of these estimates with (7.6.14) and (7.6.17) shows that they are reasonably good approximations.

*7.7 DIRECTIONAL FACTORS OF REVERSIBLE TRANSDUCERS

While the details of operation of a few of the more common acoustic sources and receivers will be discussed in Chapter 14, it is appropriate here to develop an important relationship between the transmitting and receiving directional properties of a *reversible* transducer. A reversible transducer is one that can be used either as a source or as a receiver of acoustic energy. The common office intercom incorporates such devices. The acoustic element, usually a small loudspeaker, can be switched from acting as an acoustic source (to generate a message) to acting as a receiver (to detect the response to the message).

If a reversible transducer exhibits directionality as a source, it will also be directional as a receiver. For example, a plane wave falling obliquely on the surface of a large plane piston will cause the piston to move with a normal component of velocity proportional to the spatially averaged pressure on the piston. Thus, if the wavelength of the sound is comparable to or smaller than the dimensions of the piston, the response of the piston to the incident plane wave will depend on the angle of arrival of the wave. The measure of this response is the receiving directional factor H_r. We will show that the transmitting and receiving directional factors for a reversible transducer are identical.

Consider plane waves incident on a receiver from a direction specified by θ and ϕ. Let $\langle \mathbf{p}_B \rangle_S$ be the average of the incident sound pressure over the diaphragm of the receiver, measured with the diaphragm held perfectly still (*blocked*). The receiving directional factor

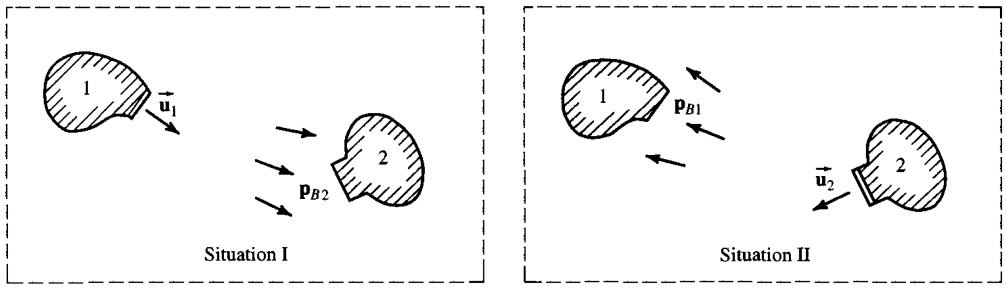

Figure 7.7.1 The reciprocity theorem applied to reversible transducers.

is then defined as

$$H_r(\theta, \phi) = \left| \frac{\langle \mathbf{p}_B(\theta, \phi) \rangle_S}{\langle \mathbf{p}_{Bax} \rangle_S} \right| \tag{7.7.1}$$

This measures the phase cancellation of the incident wave over the blocked diaphragm of the receiver as a function of θ and ϕ and thus gives the directional sensitivity of the receiver. (The receiving directional factor is defined with the diaphragm blocked to eliminate any field radiated by the motion of the diaphragm; more on this in Chapter 14.)

A relationship can be established between H_r and H for reversible transducers with the help of the reciprocity theorem. Consider the situation represented in Fig. 7.7.1. There are two reversible transducers (with all surfaces other than their diaphragms perfectly rigid) a large distance r apart in otherwise free space. (The requirement of large r ensures that near field effects are avoided.) Situation I requires one of the transducers to be active and the other passive with its diaphragm blocked. Situation II reverses the roles of the two transducers. Application of (7.2.4) yields

$$\int_{S_2} \mathbf{p}_{B2} \vec{\mathbf{u}}_2 \cdot \hat{n}\, dS = \int_{S_1} \mathbf{p}_{B1} \vec{\mathbf{u}}_1 \cdot \hat{n}\, dS \tag{7.7.2}$$

where $\mathbf{p}_B$ is the pressure distribution over each blocked diaphragm and S is the area of the diaphragm of each of transducers 1 and 2. If each diaphragm moves as a unit, so that $\vec{\mathbf{u}}_1$ and $\vec{\mathbf{u}}_2$ are constant over S_1 and S_2, then this simplifies to

$$\mathbf{u}_2 \langle \mathbf{p}_{B2} \rangle S_2 = \mathbf{u}_1 \langle \mathbf{p}_{B1} \rangle S_1 \tag{7.7.3}$$

where $\mathbf{u}_1$ and $\mathbf{u}_2$ are the components of the particle velocities perpendicular to the diaphragms.

Now, if transducer 2 is sufficiently small, it does not appreciably disturb the pressure field $\mathbf{p}_1$, which is radiated by transducer 1, so that $\mathbf{p}_{B2} = \mathbf{p}_1(r, \theta, \phi, t)$. Furthermore, the pressure $\mathbf{p}_{B1}$ is uniform over the active surface of transducer 2, so that (7.7.3) becomes

$$\mathbf{u}_2 \mathbf{p}_1(r, \theta, \phi, t) S_2 = \mathbf{u}_1 \langle \mathbf{p}_{B1}(\theta, \phi, t) \rangle_{S_1} S_1 \tag{7.7.4}$$

Now, if transducers 1 and 2 are rotated so that they are on each other's acoustic axis, (7.7.4) gives the additional equality

$$\mathbf{u}_2 \mathbf{p}_{1ax}(r, t) S_2 = \mathbf{u}_1 \langle \mathbf{p}_{B1ax}(t) \rangle_{S_1} S_1 \tag{7.7.5}$$

The magnitude of the ratio of the above pair of equations yields

$$\left| \frac{\mathbf{p}_1(r, \theta, \phi, t)}{\mathbf{p}_{1ax}(r, t)} \right| = \left| \frac{\langle \mathbf{p}_{B1}(\theta, \phi, t) \rangle_{S_1}}{\langle \mathbf{p}_{B1ax}(t) \rangle_{S_1}} \right| \tag{7.7.6}$$

The left side of (7.7.6) is H and the right side is H_r. Thus,

$$\boxed{H(\theta, \phi) = H_r(\theta, \phi)} \tag{7.7.7}$$

and a reversible acoustic transducer has the same directional properties whether it is transmitting or receiving.

*7.8 THE LINE ARRAY

Consider a line of N simple sources with adjacent elements spaced distance d apart, as shown in Fig. 7.8.1. If all sources have the same source strength and radiate waves with the same phase, then the ith source generates a pressure wave of the form $(A/r_i')\exp[j(\omega t - kr_i')]$, where r_i' is the distance from this source to (r, θ). The resultant pressure at the field point is the summation

$$\mathbf{p}(r, \theta, t) = \sum_{i=1}^{N} \frac{A}{r_i'} e^{j(\omega t - kr')} \tag{7.8.1}$$

If we restrict attention to the far field [specified by $r \gg L$, where $L = (N-1)d$ is the length of the array], all r_i' are approximately parallel. Then $r_i = r_1 - (i-1)\Delta r$, where $\Delta r = d \sin\theta$. The distance to the center of the array can be expressed as $r = r_1 - \frac{1}{2}(L/d)\,\Delta r$. In the far field, r_i' in the denominator of (7.8.1) can be replaced with r and (7.8.1) takes the form

$$\mathbf{p}(r, \theta, t) = \frac{A}{r} e^{-j(L/2d)k\Delta r} e^{j(\omega t - kr)} \sum_{i=1}^{N} e^{j(i-1)k\Delta r} \tag{7.8.2}$$

Use of the trigonometric identities in Appendix A3 results in

$$\mathbf{p}(r, \theta, t) = \frac{A}{r} e^{j(\omega t - kr)} \left(\frac{\sin[(N/2)k\Delta r]}{\sin[(1/2)k\Delta r]} \right) \tag{7.8.3}$$

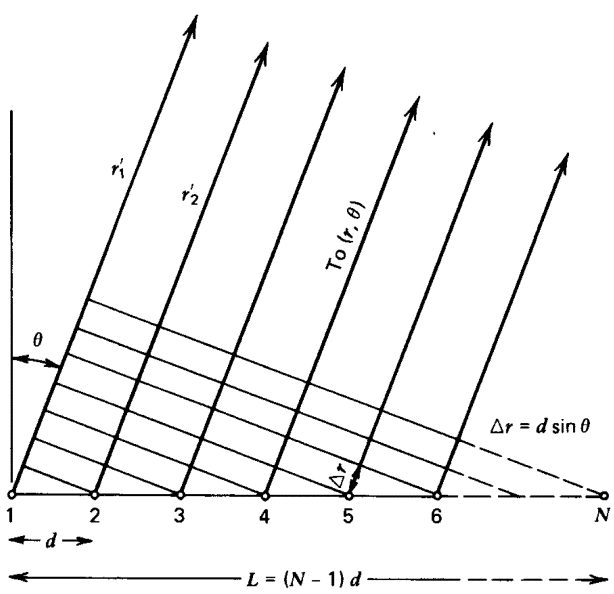

Figure 7.8.1 Geometry used in deriving the far field acoustic field at (r, θ) of a line array of N in-phase elements, spaced distance d apart.

The pressure on the axis ($\theta = 0$) is

$$\mathbf{p}(r, 0, t) = N(A/r)e^{j(\omega t - kr)} \tag{7.8.4}$$

and has the maximum possible pressure amplitude

$$P_{ax}(r) = NA/r \tag{7.8.5}$$

Identification of the directional factor

$$H(\theta) = \left| \frac{1}{N} \frac{\sin[(N/2)kd \sin\theta]}{\sin[(1/2)kd \sin\theta]} \right| \tag{7.8.6}$$

allows us to write the amplitude of the pressure in the familiar form

$$P(r, \theta) = P_{ax}(r)H(\theta) \tag{7.8.7}$$

The denominator of H may vanish if $\frac{1}{2}kd|\sin\theta| = m\pi$, but the numerator vanishes also, and the pressure amplitude becomes $P_{ax}(r)$. Thus, we can have more than one major lobe. The angles of these occur for

$$|\sin\theta| = m\lambda/d \qquad m = 0, 1, 2, \ldots, [d/\lambda] \tag{7.8.8}$$

(This result can be restated as $|\Delta r| = m\lambda$, which reveals that the radiated pressure is maximized at those angles for which the distances from the field point to the adjacent array elements differ by integral numbers of wavelengths.)

There are additional zeros in the numerator at angles given by

$$|\sin\theta| = (n/N)\lambda/d \qquad n \neq mN \qquad n = 0, 1, 2, \ldots, [Nd/\lambda] \tag{7.8.9}$$

where the integer n is neither zero nor a multiple of N. Since the denominator is not zero, the pressure vanishes and these values of θ determine the nodal surfaces in the far field. There are also secondary maxima of H that designate the directions and magnitudes of the minor lobes. The directions of these side lobes are given approximately by

$$|\sin\theta| = \left[(n + \tfrac{1}{2})/N\right]\lambda/d \qquad n \neq mN \quad \text{and} \quad n \neq mN - 1 \tag{7.8.10}$$

and the amplitudes by

$$P_n(r) = \frac{P_{ax}(r)}{N \sin\left[(n + \frac{1}{2})\pi/N\right]} \tag{7.8.11}$$

A sketch of a representative beam pattern for a linear array is given in Fig. 7.8.2.

Certain loudspeaker systems contain such line arrays, mounted vertically so that vertical directivity is large and horizontal directivity small.

In some applications it is desired to have a single narrow major lobe. A simple requirement, which results in one major lobe *almost* as narrow as possible, is to have $\theta = \pi/2$ when $n = N - 1$. This gives

$$\lambda/d = N/(N - 1) \tag{7.8.12}$$

or $kd = 2\pi(N - 1)/N$, and the beam pattern terminates at the null adjacent to the second major lobe. While not quite exact, we shall refer to this as a single *narrowest* major lobe. This major lobe is contained within angles $\pm\theta_1$ found from

$$\sin\theta_1 = 1/(N - 1) \tag{7.8.13}$$

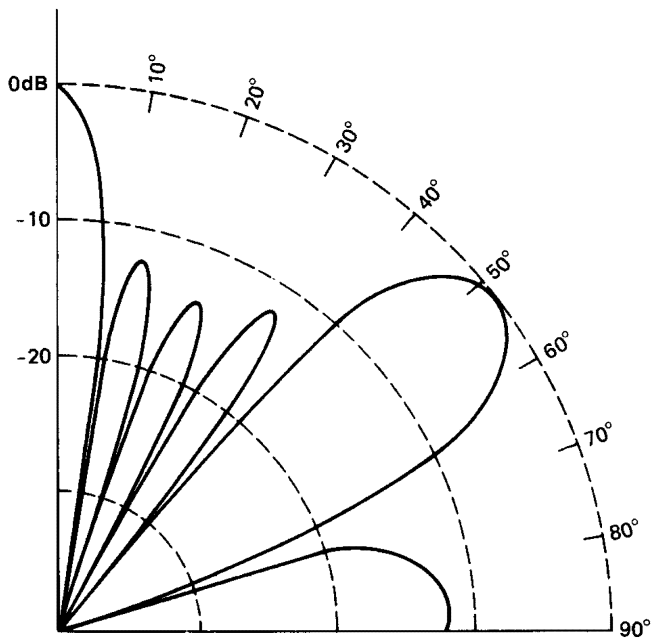

Figure 7.8.2 Beam pattern $b(\theta)$ for a line array of in-phase elements radiating sound of wave number k with $kd = 8$ and $N = 5$.

For an array of many elements, this equation reveals that, if only one narrowest major lobe is to occur, the approximate angular width of the major lobe and the directivity are

$$2\theta_1 \approx 2/N \qquad D \approx (\pi/2)N \tag{7.8.14}$$

For very large arrays it is often desirable to transmit or receive in various directions without physically rotating the array. This can be accomplished by electronic steering. If a time delay $i\tau$ is inserted into the electronic signal for the ith element of the array, (7.8.1) becomes

$$\mathbf{p}(r,\theta,t) = \sum_{i=1}^{N} \frac{A}{r_i'} e^{j[\omega(t+i\tau)-kr_i']} \tag{7.8.15}$$

and the directional factor becomes

$$H(\theta) = \left| \frac{1}{N} \frac{\sin[(N/2)kd(\sin\theta - \sin\theta_0)]}{\sin[(1/2)kd(\sin\theta - \sin\theta_0)]} \right| \tag{7.8.16}$$

where the major lobe now points in the direction θ_0 given by

$$\sin\theta_0 = c\tau/d \tag{7.8.17}$$

Thus, the introduction of a progressive time delay across the array steers the major lobe off the $\theta = 0$ plane into a cone determined by θ_0. Note that (7.8.17) is independent of frequency. In practice, this steering can be accomplished by inserting time delays in the electrical signals driving the sources or generated by the receivers either through hardwired circuits or by the use of computer software.

Figure 7.8.3 shows the beam pattern for a steered line array designed to have a single narrowest major lobe when steered to $\theta_0 = 0$ (*broadside*). Note that as the beam is steered toward $\theta_0 = \pi/2$ (*endfired*), a second major lobe develops. The only way to avoid this second major lobe is to design the array to give one narrowest major lobe when the beam is steered to $\pi/2$. This requires placement of the last null before encountering a second major lobe at $\theta = -\pi/2$, which results in

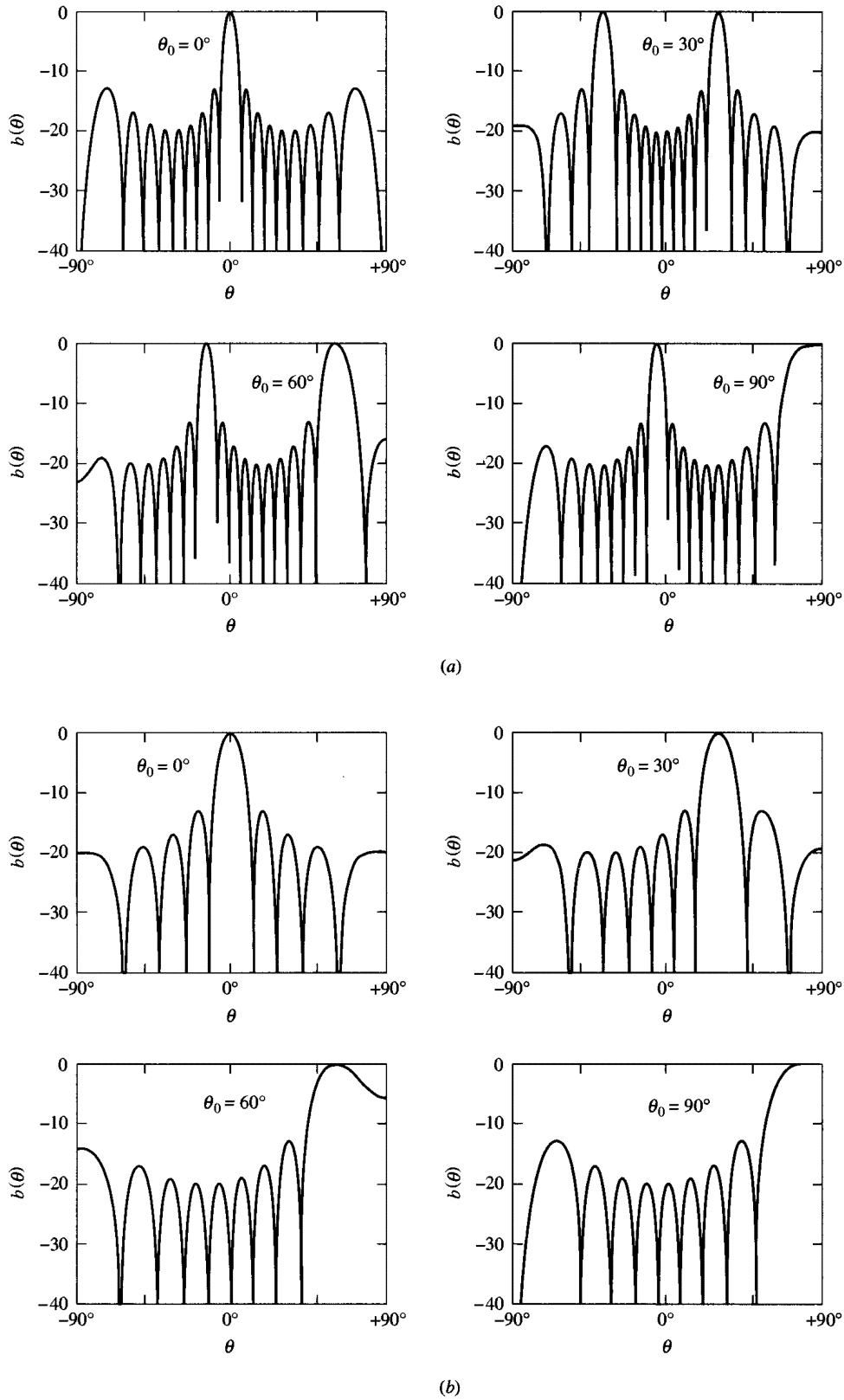

Figure 7.8.3 The beam pattern $b(\theta)$ for a linear array of 10 elements spaced distance d apart. (*a*) The value of kd is $2\pi(N-1)/N$ so that there is a single narrowest major lobe when $\theta_0 = 0$. As the beam is steered toward $\theta_0 = 90°$, a second major lobe comes in from $\theta = -90°$. (*b*) The same array but with $kd = \pi(N-1)/N$ so that there is a single narrowest major lobe in the endfire condition ($\theta_0 = 90°$). Although the beam width of the major lobe is larger than before, there is now only one major lobe for all steering angles.

$$\lambda/d = 2N/(N-1) \tag{7.8.18}$$

or $kd = \pi(N-1)/N$. If the maximum angle into which the major lobe is to be steered is $\pm\theta_0$, then the condition required to get only one narrowest major lobe is the placement of the last null before encountering a second major lobe at $\theta = \mp\pi/2$. This results in

$$\lambda/d = [N/(N-1)](1 + |\sin\theta_0|) \tag{7.8.19}$$

The directivity of a steered line array with one narrowest major lobe for all angles of steering (from broadside to endfired) can be determined by estimating the area ensonified on a unit sphere by the major lobe. A glance at Fig. 7.8.3 shows that when the beam is in the endfire position, the ensonified area is a spherical cap, and a simple calculation shows that (for large N)

$$D \sim (\pi/2)^2 N \qquad \text{(endfire)} \tag{7.8.20}$$

However, as the beam is steered away from endfire, the ensonified area resembles a belt, and calculation for large N gives

$$D \sim (\pi/4)N \qquad \text{(steered)} \tag{7.8.21}$$

During the transition from steered to endfired beam, the main lobe takes on a complicated shape and further analysis is required to determine the way D changes from $(\pi/2)^2 N$ to $(\pi/4)N$.

Amplitude shading of an array is accomplished by applying different gains to the individual elements of the array. This replaces the amplitude A in each term of the summation (7.8.15) with A_i. Amplitude shading can be used to reduce, or even eliminate, side lobes, but at the expense of a wider major lobe. (Examples of amplitude shaded arrays are given in the problems for this section.)

*7.9 THE PRODUCT THEOREM

In the preceding discussion of an array, it was assumed that each element is a simple source so the individual pressure waveforms were spherically symmetric. It is straightforward to generalize the results to an array of identical directive sources all oriented in the same direction. If attention is restricted to the far field, the pressure generated by each element must contain the factor H_e, the directionality of each element of the array. Since all rays are parallel, this factor must be the same in each term of the summation over the elements. Given this, the pressure amplitude can be modified and generalized to

$$P(r,\theta,\phi) = P_{ax}(r)H_e(\theta,\phi)H(\theta,\phi) \tag{7.9.1}$$

where H is the directional factor for the array with simple sources at the position of each element and H_e is the directional factor for a single element. This is the *product theorem.* The directional factor of an array of identical directional sources is the product of the directional factor of an array with identical geometry but with simple sources and the directional factor of a single element of the array.

*7.10 THE FAR FIELD MULTIPOLE EXPANSION

Another approach to obtaining the far field radiation pattern of an acoustic source begins with the inhomogeneous wave equation for a point source. Comparison of (5.16.4) and (7.2.13) shows that, at large distances from the source, $\mathbf{A}$ and Q are related by $\mathbf{A} = j\omega\rho_0 Q/4\pi$. Substitution into (5.16.5) and expressing the acoustic pressure in terms of the velocity

potential $\mathbf{p} = -j\omega\rho_0\mathbf{\Phi}$ (for notational simplicity) results in

$$(\nabla^2 + k^2)\mathbf{\Phi} = Q\delta(\vec{r} - \vec{r}_0)e^{j\omega t} \tag{7.10.1}$$

with the particular solution

$$\mathbf{\Phi} = -\frac{Q}{4\pi|\vec{r} - \vec{r}_0|}e^{j(\omega t - k|\vec{r}-\vec{r}_0|)} \tag{7.10.2}$$

for a point source of source strength Q located at $\vec{r}_0$. If we have a collection of sources all within a volume V_0, then this distribution can be described by a *source strength density* $\mathbf{q}(\vec{r}_0)$ and the inhomogeneous wave equation and its particular solution become

$$\boxed{\begin{aligned} (\nabla^2 + k^2)\mathbf{\Phi} &= \mathbf{q}(\vec{r}_0)e^{j\omega t} \\ \mathbf{\Phi} &= -\frac{1}{4\pi}\int_{V_0}\frac{\mathbf{q}(\vec{r}_0)}{|\vec{r} - \vec{r}_0|}e^{j(\omega t - k|\vec{r}-\vec{r}_0|)}\,dV_0 \end{aligned}} \tag{7.10.3}$$

The volume integral is over the variable $\vec{r}_0$ (the distance vector $\vec{r}$ from the origin of the coordinate system to the field point is a constant with respect to the integration).

If we assume that the field point is far away from the volume V_0, then the denominator in the integral can be approximated by r and the distance in the phase approximated by $|\vec{r} - \vec{r}_0| \approx r - \vec{r}_0 \cdot \hat{r}$ where $\hat{r} = \vec{r}/r$ is the unit vector in the $\vec{r}$ direction. A Taylor's expansion of the exponential gives

$$e^{jk\vec{r}_0\cdot\hat{r}} = \sum_{n=0}^{\infty}\frac{1}{n!}(jk\vec{r}_0 \cdot \hat{r})^n = 1 + jk\vec{r}_0 \cdot \hat{r} - \frac{1}{2!}(k\vec{r}_0 \cdot \hat{r})^2 - \frac{j}{3!}(k\vec{r}_0 \cdot \hat{r})^3 + \cdots \tag{7.10.4}$$

and integrating term by term yields

$$\mathbf{\Phi} = -\frac{1}{4\pi r}e^{j(\omega t - kr)}\left(\int_{V_0}\mathbf{q}(\vec{r}_0)\,dV_0 + jk\int_{V_0}\mathbf{q}(\vec{r}_0)(\vec{r}_0 \cdot \hat{r})\,dV_0 - \frac{1}{2!}k^2\int_{V_0}\mathbf{q}(\vec{r}_0)(\vec{r}_0 \cdot \hat{r})^2\,dV_0 - \cdots\right) \tag{7.10.5}$$

Let the successive terms on the right in (7.10.5) be labeled $\mathbf{\Phi}_1, \mathbf{\Phi}_2, \mathbf{\Phi}_3, \ldots$. In what follows, we will use spherical coordinates. See Appendix A7.

1. The first term in (7.10.5) can be written as

$$\begin{aligned} \mathbf{\Phi}_1 &= -(\mathbf{Q}/4\pi r)e^{j(\omega t - kr)} \\ \mathbf{Q} &= \int_{V_0}\mathbf{q}(\vec{r}_0)\,dV_0 \end{aligned} \tag{7.10.6}$$

   where $\mathbf{Q}$ is the *monopole strength* and $\mathbf{\Phi}_1$ the *monopole field* of a point source of source strength $\mathbf{Q}$ located at the origin and radiating a spherically symmetric field that falls off as $1/r$ (exterior to the volume V_0).

2. The second term $\mathbf{\Phi}_2$ is also easily interpreted,

$$\begin{aligned} \mathbf{\Phi}_2 &= -jk(\vec{\mathbf{D}} \cdot \hat{r}/4\pi r)e^{j(\omega t - kr)} \\ \vec{\mathbf{D}} &= \int_{V_0}\mathbf{q}(\vec{r}_0)\vec{r}_0\,dV_0 \end{aligned} \tag{7.10.7}$$

The vector $\vec{\mathbf{D}}$ is the first moment of the charge distribution and is called the *vector dipole strength.* The associated field $\mathbf{\Phi}_2$ falls off as $1/r$ in all directions with the amplitude in the $\vec{r}$ direction proportional to the scalar product $\vec{\mathbf{D}} \cdot \vec{r}$. This is a *dipole field* with two lobes of opposite phase separated by a nodal plane perpendicular to the direction of the dipole. For example, let the source strength density be

$$\mathbf{q}(\vec{r}_0) = Q\left[\delta(\vec{r}_0 - \hat{z}d) - \delta(\vec{r}_0 + \hat{z}d)\right] \tag{7.10.8}$$

This describes two monopoles, one at $(0,0,d)$ and the other at $(0,0,-d)$, each of source strength Q and with opposite phases. Direct substitution into (7.10.5) shows that $\mathbf{\Phi}_1$ and $\mathbf{\Phi}_3$ both vanish so that

$$\mathbf{\Phi}_2 = -jk\left[Q(2d)/4\pi r\right]\cos\theta\, e^{j(\omega t - kr)} \tag{7.10.9}$$

This is a *dipole field* with vector dipole strength $\vec{\mathbf{D}} = Q(2d)\hat{z}$. See Problem 7.10.4 for a further analysis of the properties of this field. [Succeeding nonzero terms ($\mathbf{\Phi}_4$ et seq.) in the series expansion give higher order terms in kd. These provide the corrections giving the radiation pattern of a *doublet*, for which kd has finite value.]

3. A quantitative discussion of the third term in the series for $\mathbf{\Phi}$ would go beyond the purposes of this book. However, just as a dipole could be constructed by placing two monopoles of opposite phases very close together, the juxtaposition of two dipoles whose strength vectors are equal in magnitude and opposite in direction will generate a *quadrupole.* There are two different geometries: (*a*) dipoles side-by-side (the *lateral* or *tesseral* quadrupole) and (*b*) dipoles head-to-head (the *axial* or *longitudinal* quadrupole). In either geometry, it can be seen easily that $\mathbf{\Phi}_1$ and $\mathbf{\Phi}_2$ vanish so that the first nonzero contribution is $\mathbf{\Phi}_3$.

   (*a*) For the lateral geometry, place two sources of strengths Q at coordinates $(d,d,0)$ and $(-d,-d,0)$ and two of strengths $-Q$ at $(-d,d,0)$ and $(d,-d,0)$. Substitute the appropriate density function $\mathbf{q}(\vec{r}_0)$ into the integrand and evaluate the scalar product at each of the coordinates of the delta functions. This gives

$$\begin{aligned}\mathbf{\Phi}_3 &= -\frac{1}{4\pi r}\frac{1}{2!}k^2 Q\left[2\left(d\frac{x}{r} + d\frac{y}{r}\right)^2 - 2\left(d\frac{x}{r} - d\frac{y}{r}\right)^2\right]e^{j(\omega t - kr)} \\ &= \frac{1}{4\pi r}k^2\left[Q(2d)^2\right]\frac{xy}{r^2}e^{j(\omega t - kr)}\end{aligned} \tag{7.10.10}$$

   This lateral quadrupole field has the form

$$\mathbf{\Phi}_3 = k^2\left[Q(2d)^2/4\pi r\right]\sin\phi\cos\phi\sin^2\theta\, e^{j(\omega t - kr)} \tag{7.10.11}$$

   where $Q(2d)^2$ is the *quadrupole strength.* The nodal surfaces are the two planes defined by $x = 0$ and $y = 0$ and the line corresponding to the z axis. A cross section in the plane of the sources ($z = 0$) shows that the directional factor $H(\pi/2, \phi)$ is in the shape of a four-leaf clover.

   (*b*) For the axial quadrupole, position sources of strength Q on the z axis at $\pm d$ and a source of strength $-2Q$ at the origin. Straightforward analysis provides the axial quadrupole field

$$\mathbf{\Phi}_3 = k^2\left[Q(2d)^2/4\pi r\right]\cos^2\theta\, e^{j(\omega t - kr)} \tag{7.10.12}$$

   In this case, the directional factor has cylindrical symmetry around the z axis, there is a nodal surface perpendicular to the z axis through the origin, and there are two lobes of the *same* phase pointing in opposite directions along the z axis.

We can now relate the above discussion to the inhomogeneous wave equation (5.15.7) and identify the three source terms with appropriate far field multipole radiation. For monofrequency motion, rewriting (5.15.7) in terms of the velocity potential gives

$$(\nabla^2 + k^2)\mathbf{\Phi} = -\frac{\mathbf{G}}{\rho_0} + \frac{1}{j\omega\rho_0}\nabla\cdot\vec{\mathbf{F}} - \frac{1}{j\omega\rho_0}\frac{\partial^2(\rho u_i u_j)}{\partial x_i\,\partial x_j} \tag{7.10.13}$$

where each nonzero term on the right has time dependence $\exp(j\omega t)$.

Let these source terms be functions of $\vec{r}_0$ contained within a small volume V_0 that is a large distance away from the field point. If only the first term on the right in (7.10.13) is nonzero, then

$$\mathbf{q}(\vec{r}_0)e^{j\omega t} = -\mathbf{G}/\rho_0 \tag{7.10.14}$$

and any of the integrals in (7.10.5) can be nonzero. Source terms corresponding to mass injection can generate any combination of multipole radiation terms. In particular, the monopole term can be excited, producing a sound field equivalent to a point source at the origin of strength Q given by (7.10.6). An example is the pulsating sphere discussed earlier in this chapter. (See Problem 7.10.7 for another case.)

If just the second source term in (7.10.13) is nonzero, then

$$\mathbf{q}(\vec{r}_0)e^{j\omega t} = (\nabla\cdot\vec{\mathbf{F}})/j\omega\rho_0 \tag{7.10.15}$$

and the sound field is that of a dipole at the origin with vector dipole strength given by (7.10.7). (See Problem 7.10.8.) Note this is the first moment of the source strength. An example of this type of source is a sphere of constant radius a vibrating in the x direction with speed $\hat{x}U\exp(j\omega t)$. For $ka \ll 1$ and at large distances ($kr \gg 1$), the sound field is[1]

$$\mathbf{\Phi}_2 = -\left[\rho_0 cU(ka)^2(a/2r)\cos\theta\right]e^{j(\omega t - kr)} \tag{7.10.16}$$

This is a dipole field with dipole strength magnitude $\rho_0 cU(ka)(2\pi a^2)$.

Finally, if just the third source term is nonzero, then

$$\mathbf{q}(\vec{r}_0)e^{j\omega t} = -\frac{1}{j\omega\rho_0}\frac{\partial^2(\rho u_i u_j)}{\partial x_i\,\partial x_j} \tag{7.10.17}$$

where the x_i are the components of $\vec{r}_0$. It can be shown that this source contributes no monopole and no dipole contributions to the acoustic field. The lowest nonzero contribution is quadrupolar with a quadrupole strength given by the second moment of the source distribution, $\frac{1}{2}\int(q\,x_i x_j)\,dV_0$.

An important property of multipole radiation is the *radiation efficiency* η_{rad} defined as

$$\eta_{rad} = R_r/\sqrt{R_r^2 + X_r^2} \tag{7.10.18}$$

For monopole radiation, the radiation efficiency of a pulsating sphere is found from the radiation impedance (7.5.19) to be $\eta_{rad} = ka$. For dipole radiation, the radiation impedance of a vibrating sphere is equal to its input mechanical impedance, so that[1]

$$Z_r = \tfrac{2}{3}\rho_0 c\pi a^2\frac{jka(1+jka)}{1+jka-(ka)^2/2} \tag{7.10.19}$$

[1]Dowling, *Encyclopedia of Acoustics*, Chap. 9, Wiley (1997).

If $ka \ll 1$, then analysis of (7.10.19) shows that $\eta_{rad} = (ka)^3/2$. In general, it can be shown[2] that if the size of the source is much less than the wavelength of the radiated sound, then

$$\eta_{rad} = (ka)^{2m+1} / \{(m+1)[1 \cdot 3 \cdot 5 \cdots (2m-1)]\} \tag{7.10.20}$$

where a is the characteristic dimension of the source and m is the order of the multipole, $m = 0$ (monopole), 1 (dipole), 2 (quadrupole). Thus, we see that at low frequencies monopole radiation is the most efficient and will dominate. If monopole radiation is absent, then dipole radiation can become important. Quadrupole radiation is important only if there are no strong monopoles or dipoles.

*7.11 BEAM PATTERNS AND THE SPATIAL FOURIER TRANSFORM

Beam patterns can also be obtained by *spatial Fourier transforms* or *spatial filtering*. It is simple to show that the equation used for performing a Fourier transform is identical to that for calculating a far field beam pattern. To investigate this approach, let us revisit the continuous line source. If the individual incremental elements have source strengths $d\mathbf{Q} = \mathbf{g}(x)U_0 2\pi x\, dx$, then (7.3.2) becomes

$$\mathbf{p}(r,\theta,t) = \frac{j}{2}\rho_0 c U_0 \frac{ka}{r} e^{j(\omega t - kr)} \int_{-L/2}^{L/2} \mathbf{g}(x) e^{jkx\sin\theta}\, dx \tag{7.11.1}$$

If $\mathbf{g}(x)$ is zero for values of x exceeding the extent of the array, then (7.11.1) can be written as

$$\mathbf{p}(r,\theta,t) = \frac{j}{2}\rho_0 c U_0 \frac{ka}{r} \mathbf{f}(u) e^{j(\omega t - kr)} \tag{7.11.2}$$

$$\mathbf{f}(u) = \int_{-\infty}^{\infty} \mathbf{g}(x) e^{jux}\, dx \qquad u = k\sin\theta \tag{7.11.3}$$

Direct comparison of (7.11.3) with (1.15.1) and application of the Fourier transform with the pair (w, t) replaced by (x, u) shows that

$$\mathbf{g}(x) = \frac{1}{2\pi} \int_{-\infty}^{\infty} \mathbf{f}(u) e^{-jux}\, du \tag{7.11.4}$$

The quantity $\mathbf{g}(x)$ is the *aperture function*. The absolute magnitude of $\mathbf{f}(u)$, when normalized to have a maximum amplitude of unity and with u replaced by $k\sin\theta$, is the directional factor $H(\theta)$. Thus, given the amplitude and phase distribution along the line source, we can predict the directional factor in the far field from (7.11.3), and vice versa—given a desired far field directional factor, we can use (7.11.4) to determine the required distribution of amplitude and phase that the individual elements of the source must have to obtain a desired directional factor.

If just the amplitudes of the individual elements are modified, but all elements remain in phase, the line source is *amplitude shaded*. If the amplitudes are all kept at the same value but the phases of the individual elements are adjusted, the source is *phase shaded*. One example of phase shading is the steered line array discussed previously.

As an example of amplitude shading, consider a continuous line source of length L with triangular shading—the center element at $x = 0$ having amplitude $L/2$ and the successively

[2]Morse and Ingard, *Theoretical Acoustics*, Princeton (1986). Morse, *Vibration and Sound*, Acoustical Society of America (1976). Ross, *Mechanics of Underwater Noise*, p. 51, Pergamon (1976).

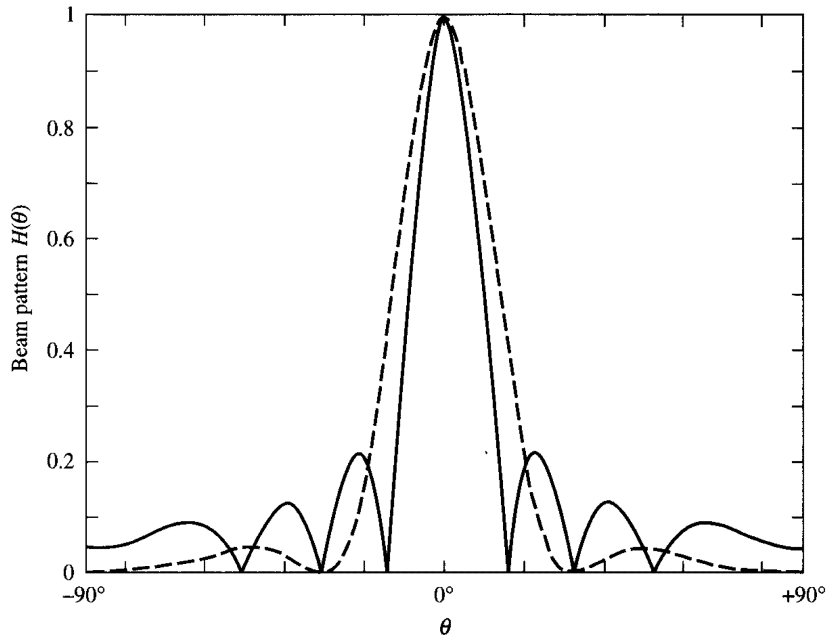

Figure 7.11.1 The directional factor for a continuous line source with $kL = 24$. The solid line is for the unshaded source and the dashed line is for the same source with symmetric triangular shading. This shading reduces the number and level of the side lobes while increasing the width of the major lobe.

more distant pairs of elements having amplitudes that decrease linearly with distance away from the center, falling to zero at $x = \pm L/2$. By symmetry, (7.11.3) becomes

$$\mathbf{f}(u) = 2\int_0^{L/2} (L/2 - x)\cos ux\,dx \tag{7.11.5}$$

Evaluation is relatively easy, and after normalizing and taking the magnitude to obtain the directional factor, we have

$$H(\theta) = \left|\frac{\sin(v/2)}{v/2}\right|^2 \tag{7.11.6}$$

where $v = \frac{1}{2}kL\sin\theta$. Comparison of (7.11.6) with (7.3.5) reveals that the first side lobe of the shaded line source is 26 dB below the peak compared to 13 dB for the unshaded line of the same length, but the main lobe is twice as wide. (See Fig. 7.11.1.) This trade-off of lower side lobes for a wider major lobe, and vice versa, is typical of most shading techniques. Although less useful, increasing the amplitude near the ends of the source will narrow the major lobe and increase the strength of the side lobes.

In the case of an array of point sources, the aperture function will be a summation of delta functions $\delta(x - x_i)$ representing the locations x_i of the individual elements. Amplitude shading is accomplished by multiplying each of the elements by its amplitude a_i or source strength Q_i, and phase shading introduces a factor $\exp(j\phi_i)$ for each of the elements.

Problems

7.1.1. A pulsating sphere of radius $a = 0.1$ m radiates spherical waves into air at 100 Hz and with an intensity of 50 mW/m^2 at a distance 1.0 m from the center of the sphere.

(*a*) What is the radiated acoustic power? (*b*) At the surface of the sphere, $r = a$, compute the intensity, the amplitudes of the acoustic pressure, particle speed, particle displacement Ξ, ratio Ξ/r, condensation, and acoustic Mach number U_0/c. (*c*) Repeat part (*b*) at a distance of 0.5 m from the center of the sphere.

7.1.2. A pulsating sphere of radius a vibrates with a surface velocity amplitude U_0 and at such a high frequency that $ka \gg 1$. Derive expressions for the pressure amplitude, the particle velocity amplitude, the intensity, and the total acoustic power radiated in the resulting acoustic wave.

7.1.3. (*a*) A spherical source of radius a is operated in water at a frequency for which $ka = 1$. Evaluate the specific acoustic impedance at the source radius for this frequency. Find the error in calculating the acoustic intensity by the formula valid for $ka \ll 1$. (*b*) If the source strength of a small ($ka \ll 1$) spherical source is kept constant, find the frequency dependence of the radiated power. If this small source is operated with constant acceleration amplitude, find the frequency dependence of the radiated power.

7.1.4. A simple source of sound in air radiates an acoustic power of 10 mW at 400 Hz. At 0.5 m from the source, compute (*a*) the intensity, (*b*) the pressure amplitude, (*c*) the particle speed amplitude, (*d*) the particle displacement amplitude, and (*e*) the condensation amplitude.

7.1.5C. (*a*) Show that in the limit $ka \ll 1$ the specific acoustic impedance at the surface of a pulsating sphere can be approximated by $\mathbf{z}(a) \approx \rho_0 cka(j + ka)$. (*b*) As a function of kr, plot the resistance, reactance, and magnitude of the impedance to compare the approximation in (*a*) with (7.1.2) and find the values of ka within which the errors in the approximation are less than 10%.

7.2.1. A hemisphere of radius a and a piston of radius a are each mounted so that they radiate on one side of an infinite baffle. They are both vibrating with the same maximum speed amplitude U_0 and at the same frequency so that $ka \ll 1$. (*a*) For a distance such that $r \gg a$, what is the ratio of the axial intensity of the piston to that of the hemisphere? (*b*) What is the ratio of the total power radiated by the hemisphere to that radiated by the piston?

7.2.2. (*a*) For the pulsating sphere of radius a show that the pressure amplitude at distance r is $P(r) = \frac{1}{2}(\rho_0 cQ/\lambda r)\sin\theta_a$. (*b*) Does the result of (*a*) reduce to that for a simple source as $ka \to 0$?

7.2.3. Find an approximation for the pressure field given by (6.8.6) in the limit $kd \ll 1$. Is this result consistent with (7.2.14) and (7.2.17) for the simple source and baffled simple source?

7.3.1. (*a*) Show for the continuous line source that the number N of nodal surfaces is given by $N = [L/\lambda]$. (*b*) Find the number of major and minor lobes for $L/\lambda = 4.8, 5, 5.2$. (*c*) For which of the cases of (*b*) are the last minor lobes fully developed? Only partially developed?

7.3.2. A simple line source is designed so that $kL = 50$. (*a*) How many major lobes are there? (*b*) Find the total number of nodal surfaces. (*c*) Find the angular width in degrees of the major lobe that is centered at $\theta = 0$. (*d*) Estimate the relative strength in dB of the first side lobe.

7.3.3C. Assume a continuous line source with $kL = 24$. (*a*) Compute and plot contours of equal acoustic pressure amplitude in the near field by direct numerical integration of (7.3.1) before approximating r'. (*b*) Compare these contours with those obtained in the far field from (7.3.4). Describe the transition from near to far field behaviors.

7.4.1. For a baffled piston of radius a driven at angular frequency ω, (*a*) find the smallest angle θ_1 for which the pressure is zero in the far field, (*b*) find the greatest finite

distance for which the pressure is zero on the acoustic axis, and (*c*) discuss the possibility of obtaining $\theta_1 \ll 1$ and $r_1/a \ll 1$ simultaneously.

7.4.2. A piston of radius a is mounted so as to radiate on one side of an infinite baffle into air. The piston is driven at a frequency such that $\lambda = \pi a$. (*a*) Compute and plot the relative axial intensities produced by the piston from its surface to a distance of $r = 3a$. (*b*) Over what range of distances is the divergence approximately spherical?

7.4.3. A circular piston sonar transducer of 0.5 m radius radiates 5000 W of acoustic power into water at 10 kHz. What is its beam width at the −10 dB direction?

7.4.4. Show that the nodal angles of the piston can be approximated by $\sin\theta_m \approx (m+\frac{1}{4})\pi/ka$. Estimate the error in θ_m for the first nodal surface given by $m = 1$.

7.4.5. By expanding $\exp(jka\sin\theta\cos\phi)$ in (7.4.15) as a power series show that (7.4.16) is correct and

$$\int_0^{\pi} e^{jka\sin\theta\cos\phi}\sin^2\phi\,d\phi = \pi\frac{J_1(ka\sin\theta)}{ka\sin\theta}$$

7.4.6C. (*a*) For a circular piston, plot the on-axis pressure amplitude as a function of scaled distance r/a for several values of ka between 3 and 12. (*b*) Plot the range beyond which the pressure amplitude is within 10% of the asymptotic form (7.4.7). (*c*) For a piston of 20 cm radius operating at 4 kHz in water, find the distance corresponding to (*b*).

7.4.7C. For $ka = 3$, use numerical integration to plot the pressure amplitude of a circular piston (*a*) on axis and compare to (7.4.5), (*b*) on the face of the piston, and (*c*) in the near field off axis.

7.5.1. (*a*) Find the resonance frequency of a piston transducer with the mechanical properties m, s, and R_m radiating into a fluid with specific acoustic impedance $\rho_0 c$. Assume $ka \gg 2$. (*b*) Sketch the frequency dependence of the radiated power if the transducer is driven with a force of constant amplitude. Assume that the resonance frequency occurs well above the lower limit of the approximations implicit in $ka \gg 2$. Indicate where the transducer is mass controlled and where it is stiffness controlled.

7.5.2. Evaluate the integrals in (7.5.10) and obtain the radiation impedance for the piston. *Hints:* (*a*) Perform the integration over r directly. (*b*) Use the integral forms of the Bessel and Struve functions

$$\frac{2}{\pi}\int_0^{\pi/2}\begin{Bmatrix}\cos(x\cos\theta)\\ \sin(x\cos\theta)\end{Bmatrix}d\theta = \begin{Bmatrix}J_0(x)\\ \mathbf{H}_0(x)\end{Bmatrix}$$

to integrate over θ. (*c*) Use the integral relations

$$\int_0^b\begin{Bmatrix}J_0(x)\\ \mathbf{H}_0(x)\end{Bmatrix}x\,dx = b\begin{Bmatrix}J_1(b)\\ \mathbf{H}_1(b)\end{Bmatrix}$$

to evaluate the integral over σ.

7.5.3. (*a*) Find the radiation impedance of a pulsating hemisphere. (*b*) Find the radiation resistance for high frequencies, and from this find the radiated power and compare to the results in Section 7.1. (*c*) Find the radiation reactance for low frequencies, and from this find the ratio of the radiation mass to the mass of the fluid displaced by the hemisphere.

7.6.1. Obtain (7.6.16) for the baffled piston directivity as follows: (*a*) Use (7.5.6) and (7.6.9) to relate the directivity D, extrapolated axial pressure amplitude $P_{ax}(1)$, and radiation resistance R_r of the piston. (*b*) Use (7.4.7) to eliminate $P_{ax}(1)$ and then (7.5.11) and (7.5.12) to express R_r in terms of $J_1(2ka)/ka$. (*c*) Solve the result for D.

7.6.2. A plane circular piston in an infinite baffle operates into water. The radius of the piston is 1 m. At $6/\pi$ kHz the sound pressure level on axis at 1 km is 100 dB *re* 1 μbar. (*a*) Find all angles at which the pressure amplitude in the far field is zero. (*b*) Find the rms speed of the piston. (*c*) If the frequency were doubled while keeping the speed amplitude of the piston constant, what would be the dB change in the sound pressure level on the axis in the far field and what would be the dB change in the directivity index?

7.6.3. A flat piston of 0.2 m radius radiates 100 W of acoustic power at 20 kHz in water. (*a*) Assuming the radiation to be equivalent to that of a piston mounted in an infinite baffle and radiating on only one side, what is the velocity amplitude of the piston? (*b*) What is the radiation mass loading of the piston? (*c*) What is the beam width at the down 10 dB direction? (*d*) What is the directivity index of the beam?

7.6.4. A piston is mounted so as to radiate on one side of an infinite baffle into air. The radius of the piston is a, and it is driven at a frequency such that $\lambda = \pi a$. (*a*) If $a = 0.1$ m and the maximum displacement amplitude of the piston is 0.0002 m, how much acoustic power is radiated? (*b*) What is the axial intensity at a distance of 2.0 m? (*c*) What is the directivity index of the radiated beam? (*d*) What is the radiation mass?

7.6.5. It is desired to design a highly directive piston transducer that will produce a given acoustic pressure amplitude P on axis at a specified range r. The operating frequency must be f, and the total acoustic power output is fixed. Find the radius and speed amplitude of this transducer.

7.6.6. A flat piston of 0.15 m radius is mounted to radiate on one side of an infinite baffle into air at 330 Hz. (*a*) What must be the speed amplitude of the piston if it is to radiate 0.5 W of acoustic power? (*b*) If the piston has a mass of 0.015 kg, a stiffness constant of 2000 N/m, and negligible internal mechanical resistance, what force amplitude is required to produce this velocity amplitude?

7.6.7. A baffled piston transducer with radius 10 cm is normally operated at 15 kHz. If it is desired to operate this same transducer at 3.5 kHz while maintaining the same acoustic pressure on the axis in the far field, calculate the ratio of the total acoustic power output at 3.5 kHz to that at 15 kHz. Assume operation in water.

7.6.8. A continuous line source is designed so that $kL = 50$. (*a*) If the length of the array is 100 m, estimate the distance to the far field. (*b*) Estimate the directivity index from (7.6.14). (*c*) Repeat (*b*) but using (7.6.25). (*d*) Compare the discrepancies in D and DI between (*b*) and (*c*) and comment on their significance.

7.6.9C. (*a*) For a circular piston, as a function of ka, plot the exact directivity and its high-frequency approximation, and their percent difference. (*b*) If the radius of a piston operating in water is 20 cm, below what frequency will the approximate directivity differ by more than 10% from the exact value?

7.8.1. Show for the line array that $P_{ax}(r) = (N/2)\rho_0 cQ/\lambda r$.

7.8.2. It is desired to design an underwater linear array of 30 equally spaced elements. (The array is not steered or shaded.) (*a*) If there is to be a single narrowest major lobe at 300 Hz, find the spacing between elements. (*b*) What is the angular width in degrees of the major lobe? (*c*) What is the geometrical shape of the axis of the major lobe? (*d*) Estimate the directivity index of the array.

7.8.3. (*a*) For an endfired line array, derive the condition (7.8.18) that guarantees there will be only one major lobe. (*b*) Derive the similar condition (7.8.19) for a line array steered into a maximum angle θ_0 away from broadside.

7.8.4. An array with a large number N of elements is designed to be steered through all angles and to have a single narrowest major lobe when endfired. (*a*) With the help of the estimation techniques of Section 7.6, derive the directivity (7.8.20) of the array when endfired. (*b*) Derive the directivity (7.8.21) when this array is steered into the angle θ_0 not close to endfired.

7.8.5. It is desired to design an endfired linear array of 30 equally spaced elements to be operated in water at 300 Hz. (*a*) Find the spacing between elements if there is to be only one major lobe. (*b*) What is the geometric shape of the major lobe axis? (*c*) Find the angular width in degrees of the major lobe. (*d*) Estimate the directivity index of this endfired array.

7.8.6. Find the minimum number of array elements for which $\theta_1 = 1/N$ is within about 20% of the value given by (7.8.13), and estimate the error in DI from that discrepancy alone.

7.8.7. (*a*) Verify (7.8.20) and (7.8.21). *Hint:* Obtain the major lobe angular width with the help of (7.8.16)–(7.8.19), and the approximation for small δ that $\sin(\theta_0+\delta) \approx \sin\theta_0 + \delta\cos\theta_0$. Then use the techniques of Section 7.6 to estimate the directivity. (*b*) Find a rough criterion in terms of the major lobe half-angle for the maximum steering angle around which this estimate becomes poor.

7.8.8. Assume a three-element array with no steering has amplitude weighting $A_1 = A_3 = 1$ and $A_2 = 2$. (This is called *binomial shading* because the amplitudes are proportional to the binomial coefficients.) Find (*a*) the condition on kd for there to be just a single major lobe, and (*b*) the equation for $H(\theta)$ under the condition of (*a*).

7.8.9C. Estimate the directivity of a steered line array with one narrowest major lobe when endfired for steering angles bridging the gap from endfire with $D = (\pi/2)^2 N$ to strongly steered where $D = (\pi/4)N$.

7.8.10C. An unsteered four-element array is designed to have a single narrowest major lobe. If $A_2 = A_3 = 1$ and $A_1 = A_4$ can vary from 2 to -2, make plots of the directional factors and describe the effects on the lobes and nulls.

7.8.11. A "shotgun" microphone is constructed with N parallel tubes whose respective lengths measured from the diaphragm are L, $L-d$, $L-2d$, $L-3d, \ldots, L-(N-1)d$. Show that the directional factor for such a microphone is

$$H(\theta) = \left| \frac{\sin[N\,kd\sin^2(\theta/2)]}{N\sin[kd\sin^2(\theta/2)]} \right|$$

where θ is the off-axis angle measured from the axes of the tubes.

7.9.1. Write the directional factor $H(\theta, \phi)$ for a rectangular piston transducer in terms of the angles, k, and the dimensions L_x and L_y of the piston.

7.9.2C. A twin-line array consists of two identical linear arrays of N elements and spacing d. The linear arrays are parallel and separated by a distance D. The arrays operate in the endfired mode with one narrowest major lobe. If $N = 15$ and $kD = \pi$, plot the beam patterns of an individual array and of the twin-line array.

7.9.3C. Three identical piston sources of radius a are set in a line on an infinite baffle with their centers a distance d apart and their axes perpendicular to the baffle. For $kd = 2\pi$, plot the far-field beam patterns for $d/a = 2$, 3, and 4. Comment on the effect of the directionality of the piston sources on the beam pattern of the array.

7.10.1. Show that if $\mathbf{q}(\vec{r}_0) = Q\delta(0)$ then (7.10.3) reduces immediately to (7.10.2) with $\vec{r}_0 = 0$.

7.10.2. Show by direct integration of the infinite series of (7.10.5) that a monopole located at $\vec{r} = \vec{a}$ gives the same velocity potential as (7.10.2) under the far field approximation $|\vec{r} - \vec{a}| \approx r - \vec{a} \cdot \hat{r}$.

7.10.3. Assume three point sources of equal amplitudes and phases are located along the x axis at $x = d, 0, -d$. (*a*) Obtain the multipole expansion for the array from (7.10.5). (*b*) Show that it can be put into the form

$$\mathbf{\Phi} = \frac{Q}{4\pi r}\left[3 - 4\sin^2\left(\tfrac{1}{2}kd\sin\theta\right)\right]e^{j(\omega t - kr)}$$

(*c*) Show that (*b*) is identical with the result for the three-element line array obtained from (7.8.3). *Hint:* Verify that $4\sin^3\beta = 3\sin\beta - \sin 3\beta$ and use this to simplify.

7.10.4. Convert (7.10.9) into an expression for the acoustic pressure and compare the result with (6.8.7) in the limit $kd \ll 1$. Note that the angle used in Section 6.8 is the complement of θ defined for spherical coordinates.

7.10.5. Derive (7.10.12). *Hint:* Verify that the source strength density is given by $\mathbf{q}(\vec{r}_0) = Q[\delta(\vec{r}_0 - \hat{z}d) + \delta(\vec{r}_0 + \hat{z}d) - 2\delta(0)]$.

7.10.6. Show that three identical axial quadrupoles each oriented along a different coordinate axis and all with their centers at the origin generate a spherically symmetric field of order $O(kd)^2$.

7.10.7. Find the monopole, dipole, and quadrupole fields for the source strength distribution $q = A(a - r)$ for $0 < r \leq a$ and $q = 0$ for $r > a$, where A is a constant and r is the distance from the origin.

7.10.8. Show that for the source strength given by (7.10.15) the monopole contribution is zero. *Hint:* Apply Gauss's theorem to a volume integral that includes all the sources.

7.10.9. Show that for the source strength given by (7.10.17) the monopole contribution is zero. *Hint:* Write (7.10.17) in vector form with the help of (5.15.5).

7.10.10C. (*a*) Make a sketch (representing a three-dimensional view) and plot the directional factor of a dipole in representative planes. (*b*) Repeat (*a*) for a lateral quadrupole. (*c*) Repeat (*a*) for an axial quadrupole.

7.10.11. (*a*) Show that the radiation efficiency of a pulsating sphere is $\eta_{rad} = ka$. (*b*) Show that the radiation efficiency of a vibrating sphere is $\eta_{rad} = (ka)^3/2$.

7.11.1. Assume three point sources of equal amplitudes and phases are located along the x axis at $x = d, 0, -d$. (*a*) Write down an appropriate form for the aperture function. (*b*) Obtain the directional factor using (7.11.3). (*c*) Show that this result is identical with that for the three-element line array obtained from (7.8.3).

7.11.2C. (*a*) Plot the far-field directional factor of an unsteered, unshaded, 9-element array with spacing that gives one narrowest major lobe. (*b*) Repeat for the same spacing, but with amplitude shading (1,2,3,4,5,4,3,2,1). (*c*) Repeat for shading (5,4,3,2,1,2,3,4,5). (*d*) Comment on the effects of these shadings.