US 20030031328A1

(19) United States

(12) Patent Application Publication (10) Pub. No.: US 2003/0031328 A1

Elko et al. (43) Pub. Date: Feb. 13, 2003

(54) SECOND-ORDER ADAPTIVE DIFFERENTIAL MICROPHONE ARRAY

(76) Inventors: **Gary W. Elko**, Summit, NJ (US); **Heinz Teutsch**, Nurnberg (DE)

Correspondence Address:
MENDELSOHN AND ASSOCIATES PC
1515 MARKET STREET
SUITE 715
PHILADELPHIA, PA 19102 (US)

(21) Appl. No.: 09/999,298

(22) Filed: Oct. 30, 2001

Related U.S. Application Data

(60) Provisional application No. 60/306,271, filed on Jul. 18, 2001.

Publication Classification

(51) Int. Cl.[7] H04R 3/00

(52) U.S. Cl. 381/92

(57) **ABSTRACT**

A second-order adaptive differential microphone array (ADMA) has two first-order elements (e.g., **802** and **804** of **FIG. 8**), each configured to convert a received audio signal into an electrical signal. The ADMA also has (i) two delay nodes (e.g., **806** and **808**) configured to delay the electrical signals from the first-order elements and (ii) two subtraction nodes (e.g., **810** and **812**) configured to generate forward-facing and backward-facing cardioid signals based on differences between the electrical signals and the delayed electrical signals. The ADMA also has (i) an amplifier (e.g., **814**) configured to amplify the backward-facing cardioid signal by a gain parameter; (ii) a third subtraction node (e.g., **816**) configured to generate a difference signal based on a difference between the forward-facing cardioid signal and the amplified backward-facing cardioid signal; and (iii) a lowpass filter (e.g., **818**) configured to filter the difference signal from the third subtraction node to generate the output signal for the second-order ADMA. The gain parameter for the amplifier can be adaptively adjusted to move a null in the back half plane of the ADMA to track a moving noise source. In a subband implementation, a different gain parameter can be adaptively adjusted to move a different null in the back half plane to track a different moving noise source for each different frequency subband.

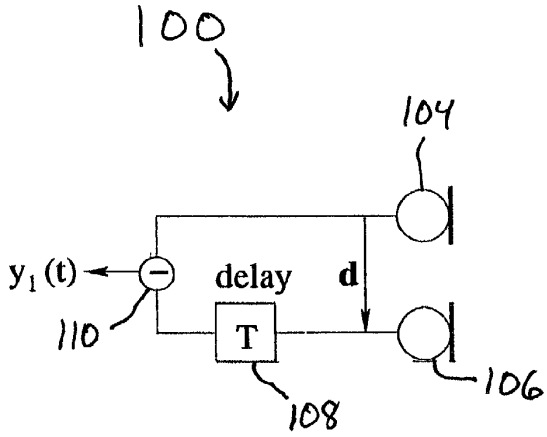

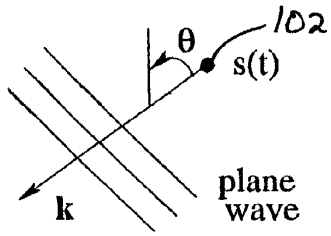

Sony v. Jawbone
U.S. Patent No. 8,503,691
Sony Ex. 1012

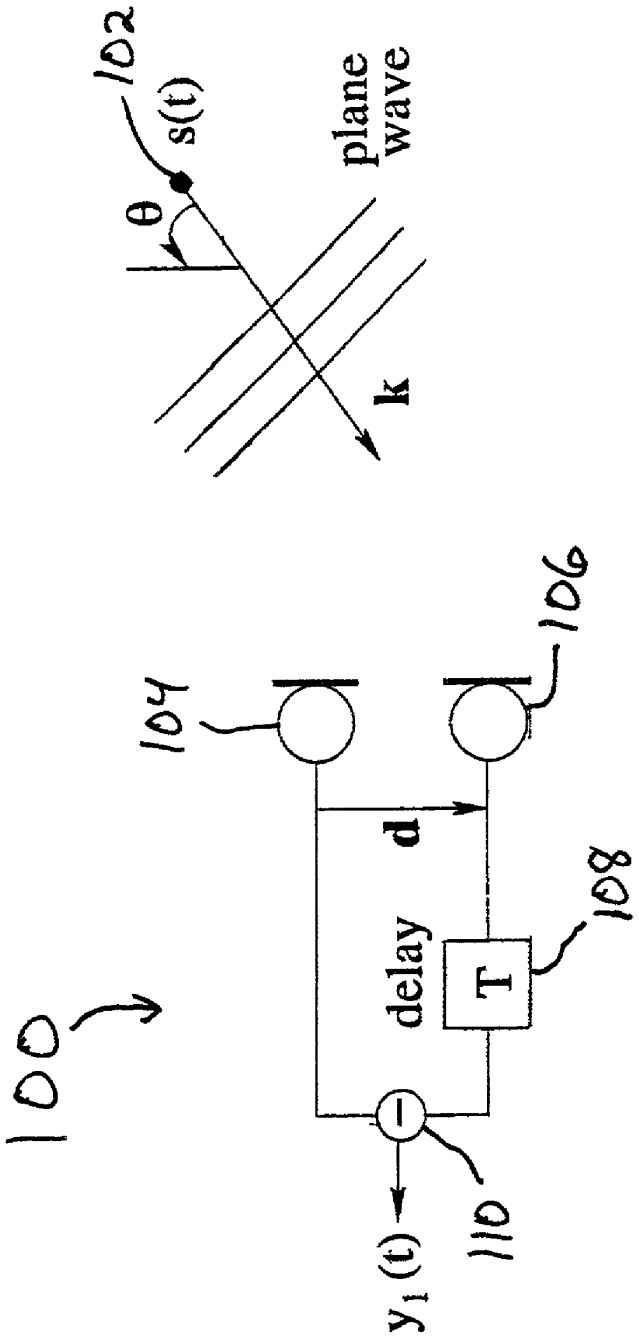

FIG. 1

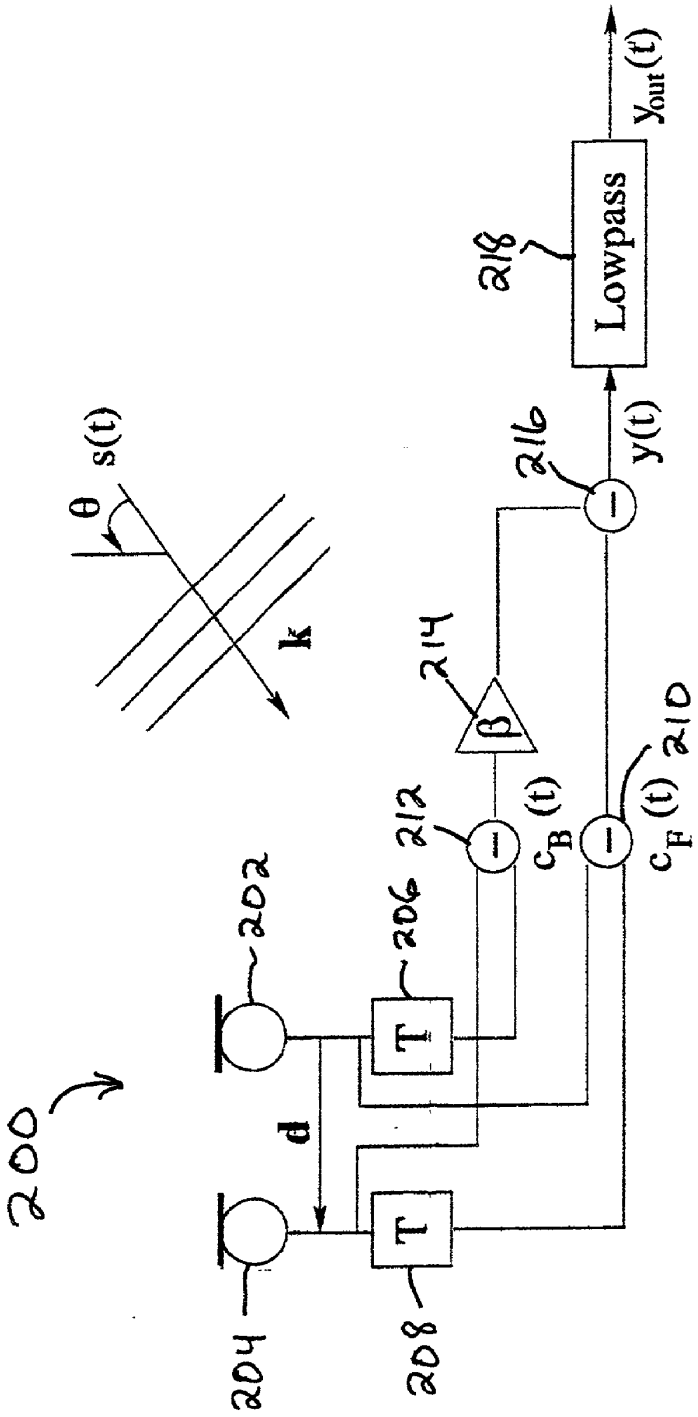
200
202
204
206
208
T
T
d
212
210
214
β
216
218
Lowpass
$c_B(t)$
$c_F(t)$
y(t)
$y_{out}(t)$
θ
s(t)
k

FIG. 2

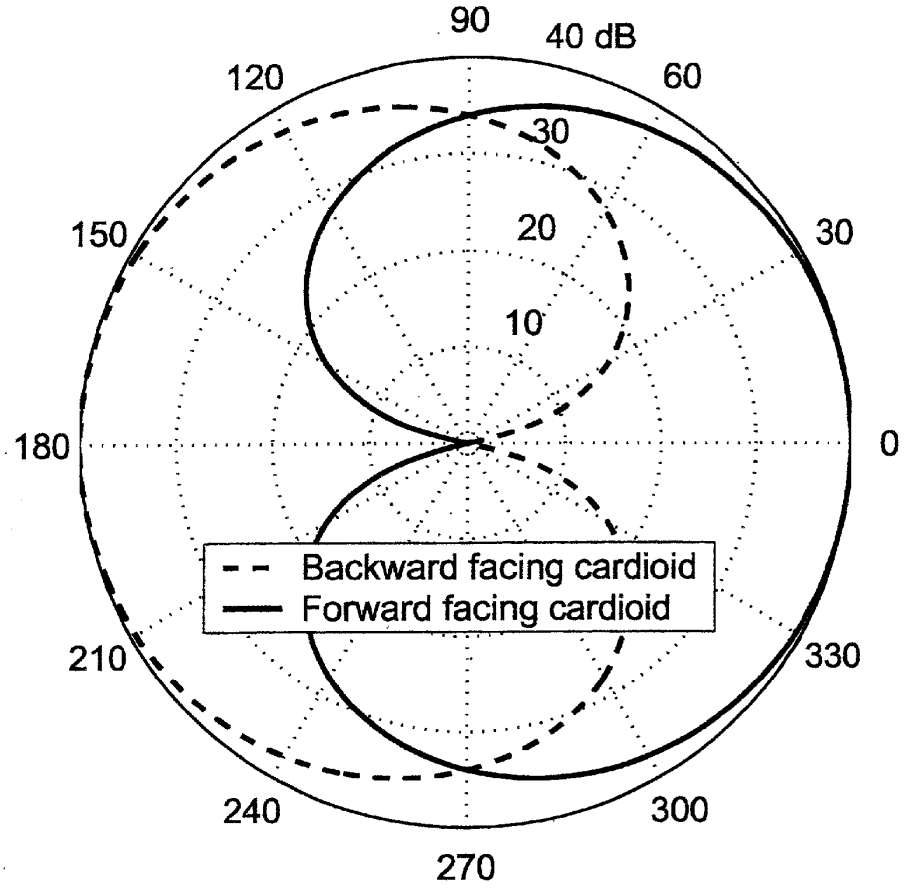
90
40 dB
120
60
30
150
20
30
10
180
0
Backward facing cardioid
Forward facing cardioid
210
330
240
300
270

FIG. 3

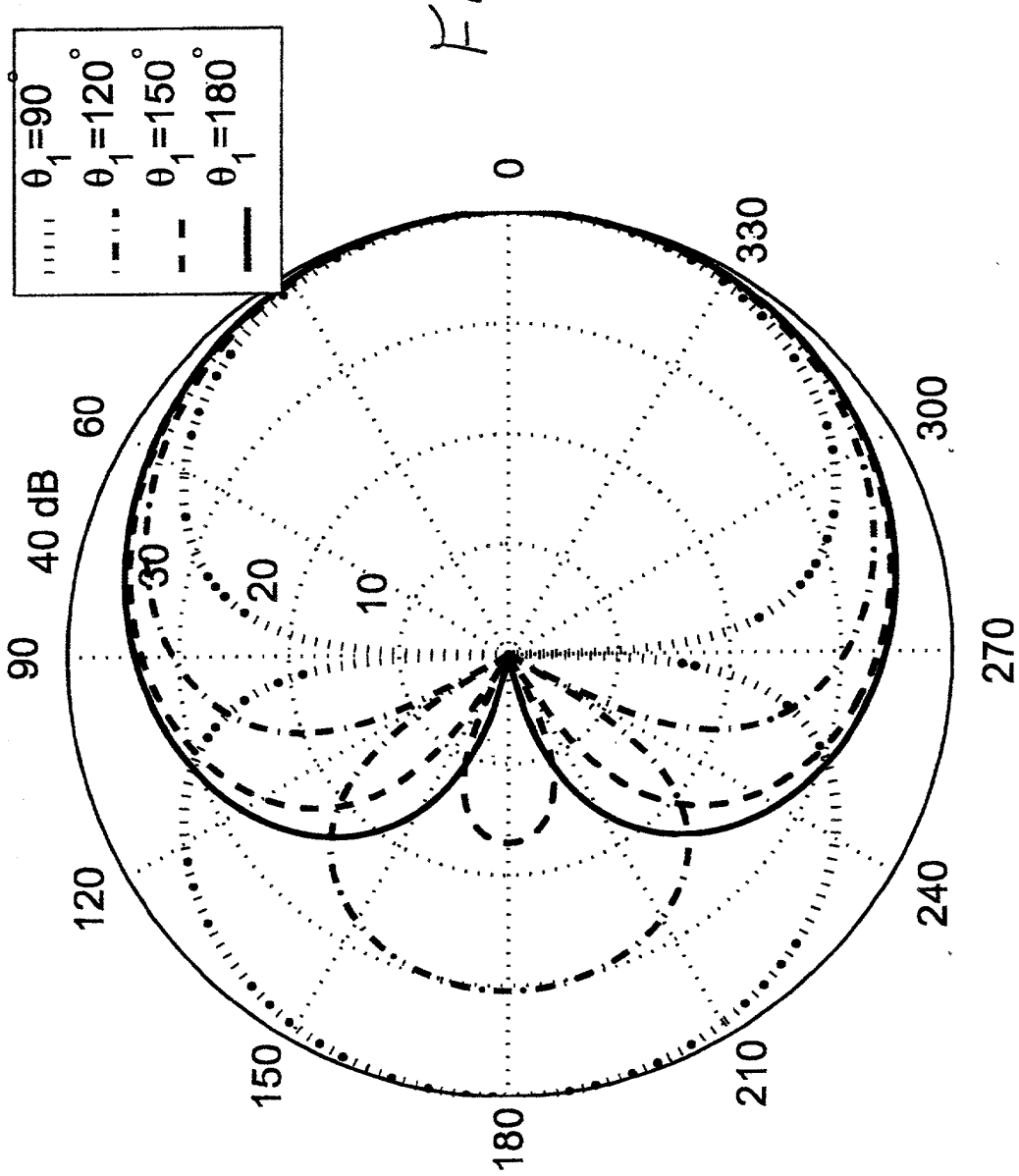
θ1=90°
θ1=120°
θ1=150°
θ1=180°
0
30
60
90
120
150
180
210
240
270
300
330
10
20
30
40 dB

FIG. 4

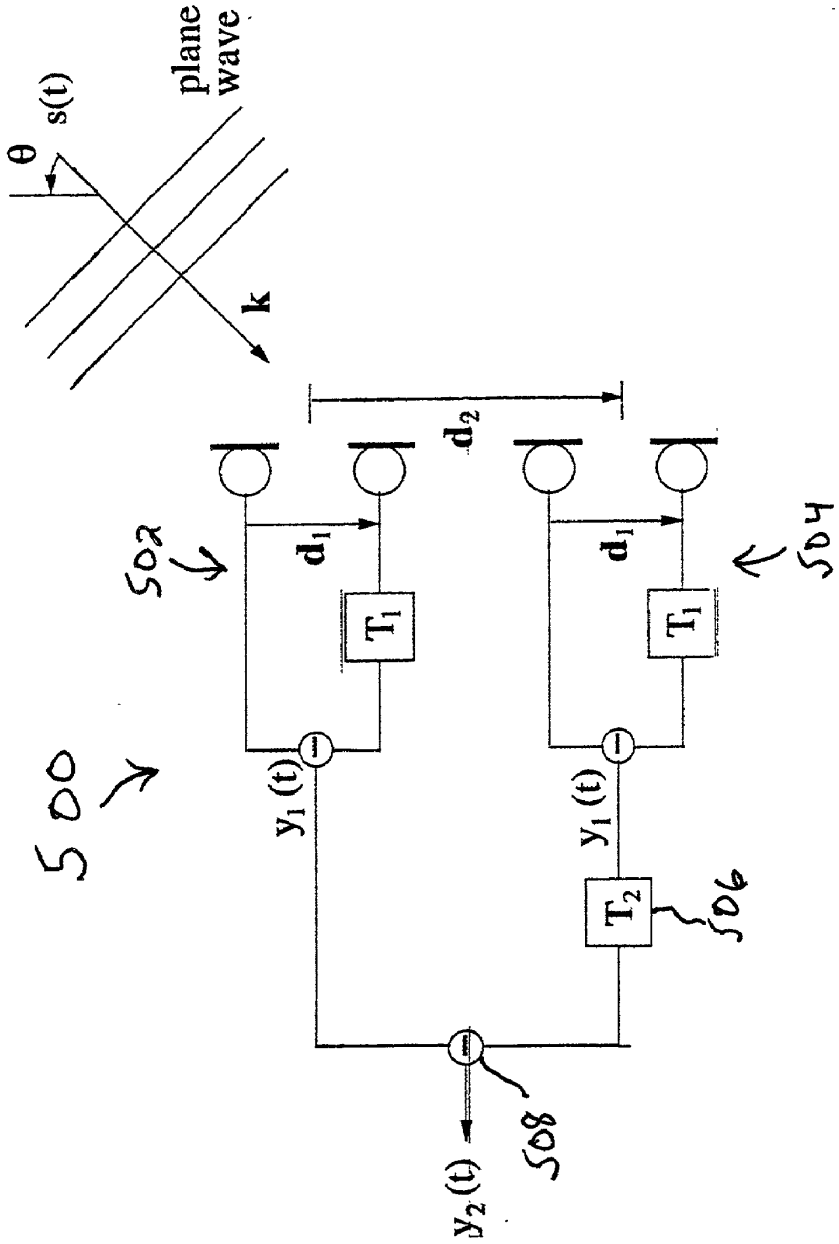

FIG. 5

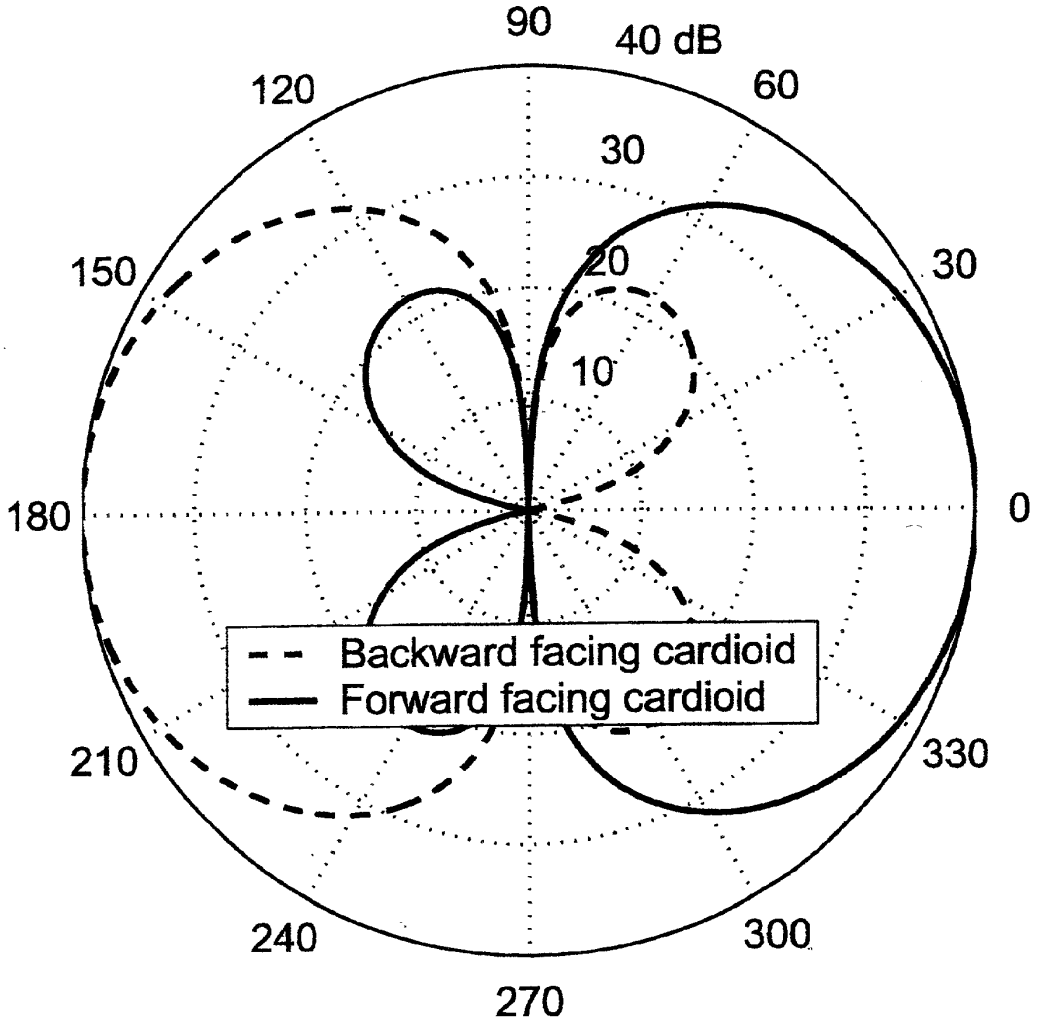
90
40 dB
120
60
30
150
20
30
10
180
0
Backward facing cardioid
Forward facing cardioid
210
330
240
300
270

FIG. 6

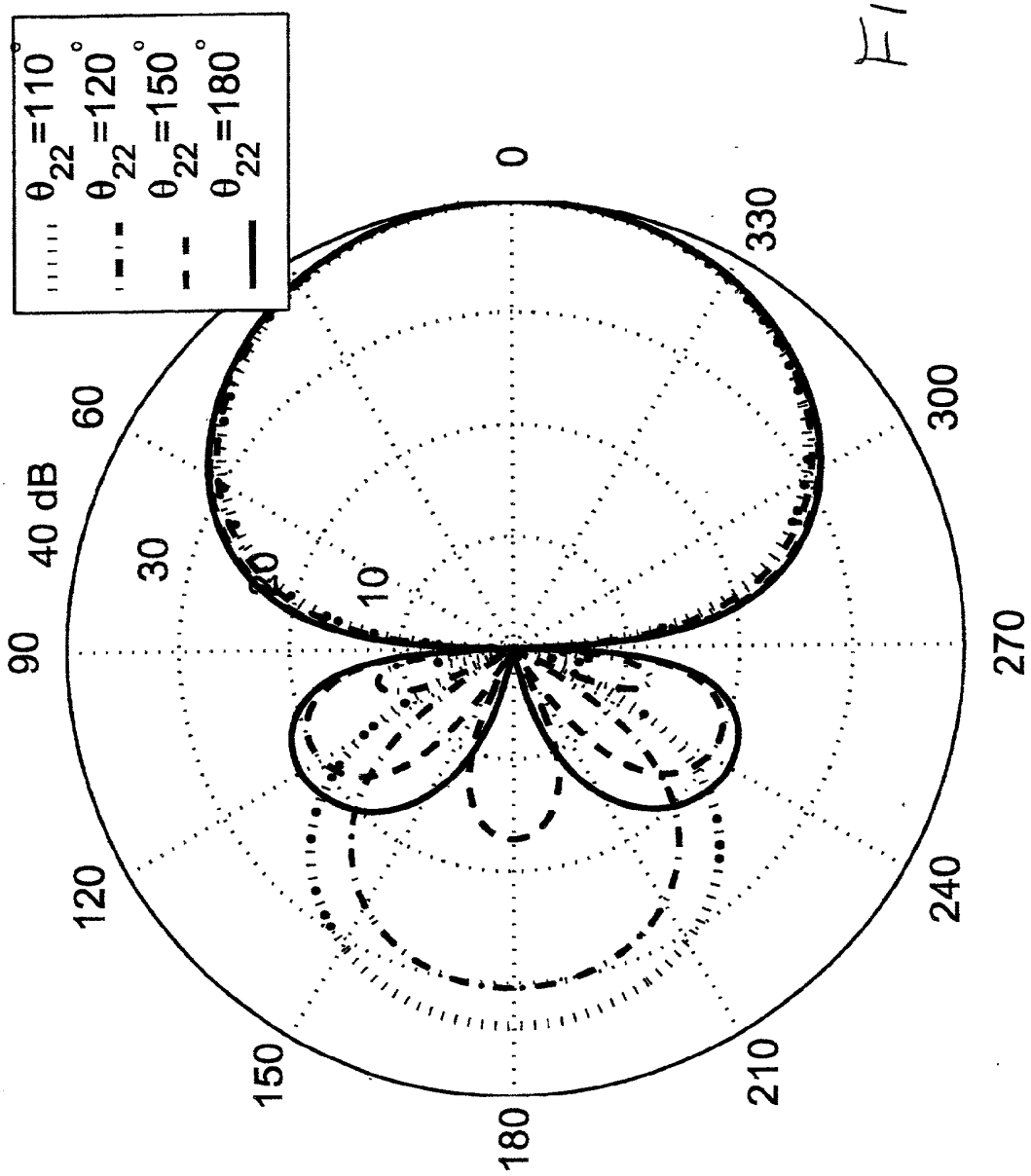
θ22=110°
θ22=120°
θ22=150°
θ22=180°
0
30
60
90
120
150
180
210
240
270
300
330
10
20
40 dB

FIG. 7

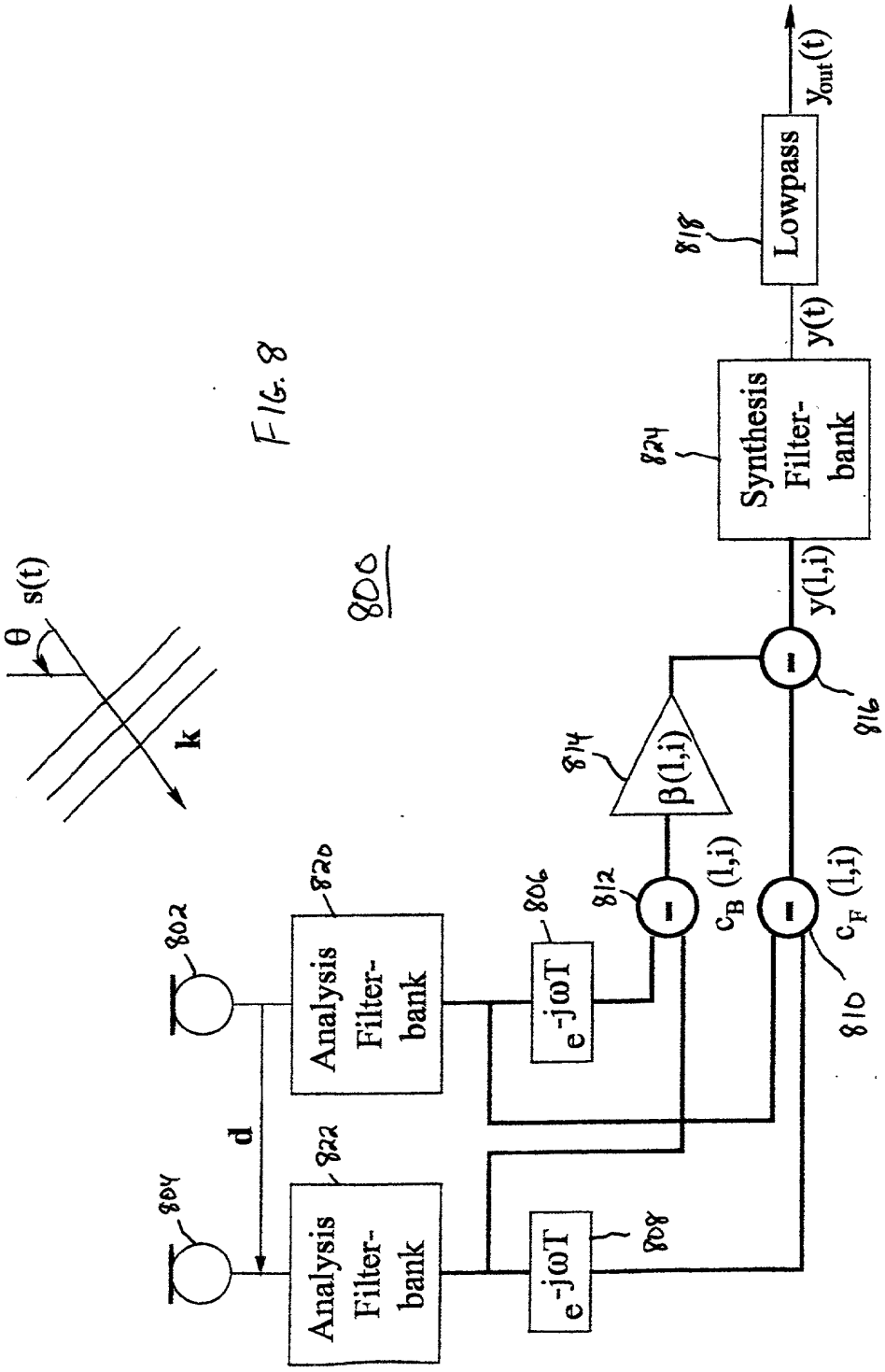
s(t)
θ
k
d
802
804
Analysis Filter-bank
820
Analysis Filter-bank
822
$e^{-j\omega T}$
806
$e^{-j\omega T}$
808
812
$c_B(l,i)$
814
β(l,i)
$c_F(l,i)$
810
816
y(l,i)
Synthesis Filter-bank
824
y(t)
Lowpass
818
$y_{out}(t)$

FIG. 8

800

FIG. 9

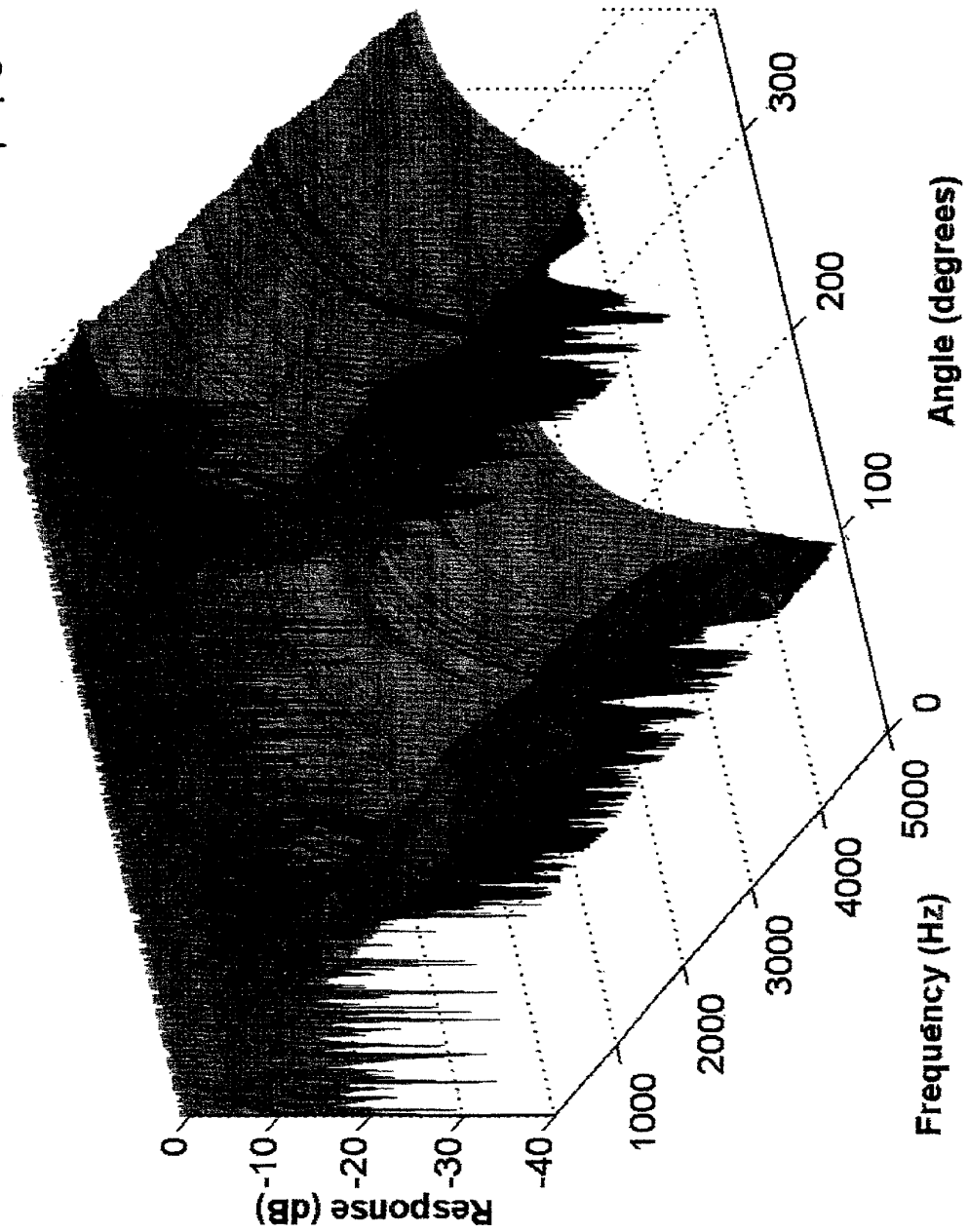
Response (dB)
0
-10
-20
-30
-40
Frequency (Hz)
1000
2000
3000
4000
5000
Angle (degrees)
0
100
200
300

FIG 9B

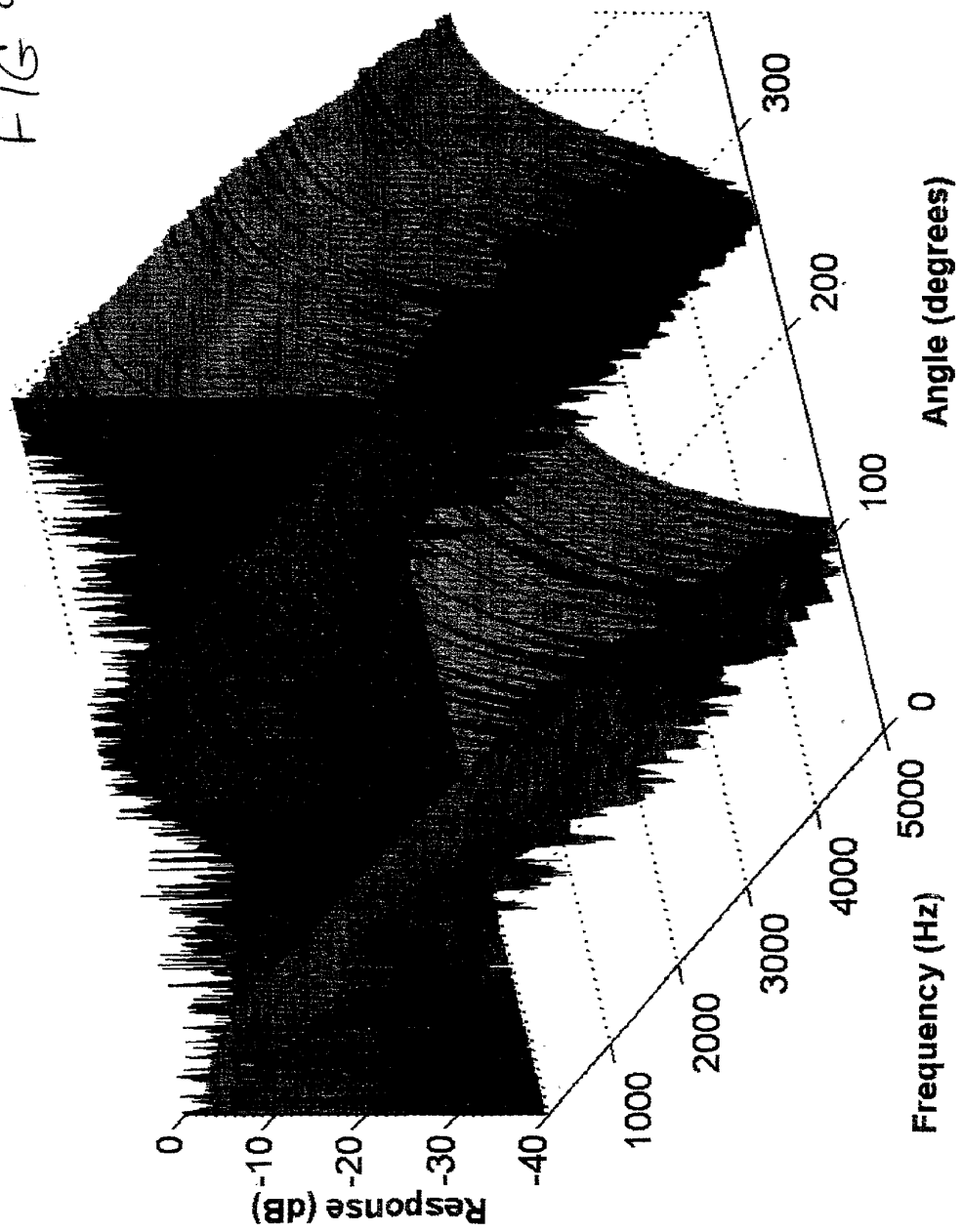
Response (dB)
0
-10
-20
-30
-40
Frequency (Hz)
1000
2000
3000
4000
5000
Angle (degrees)
0
100
200
300

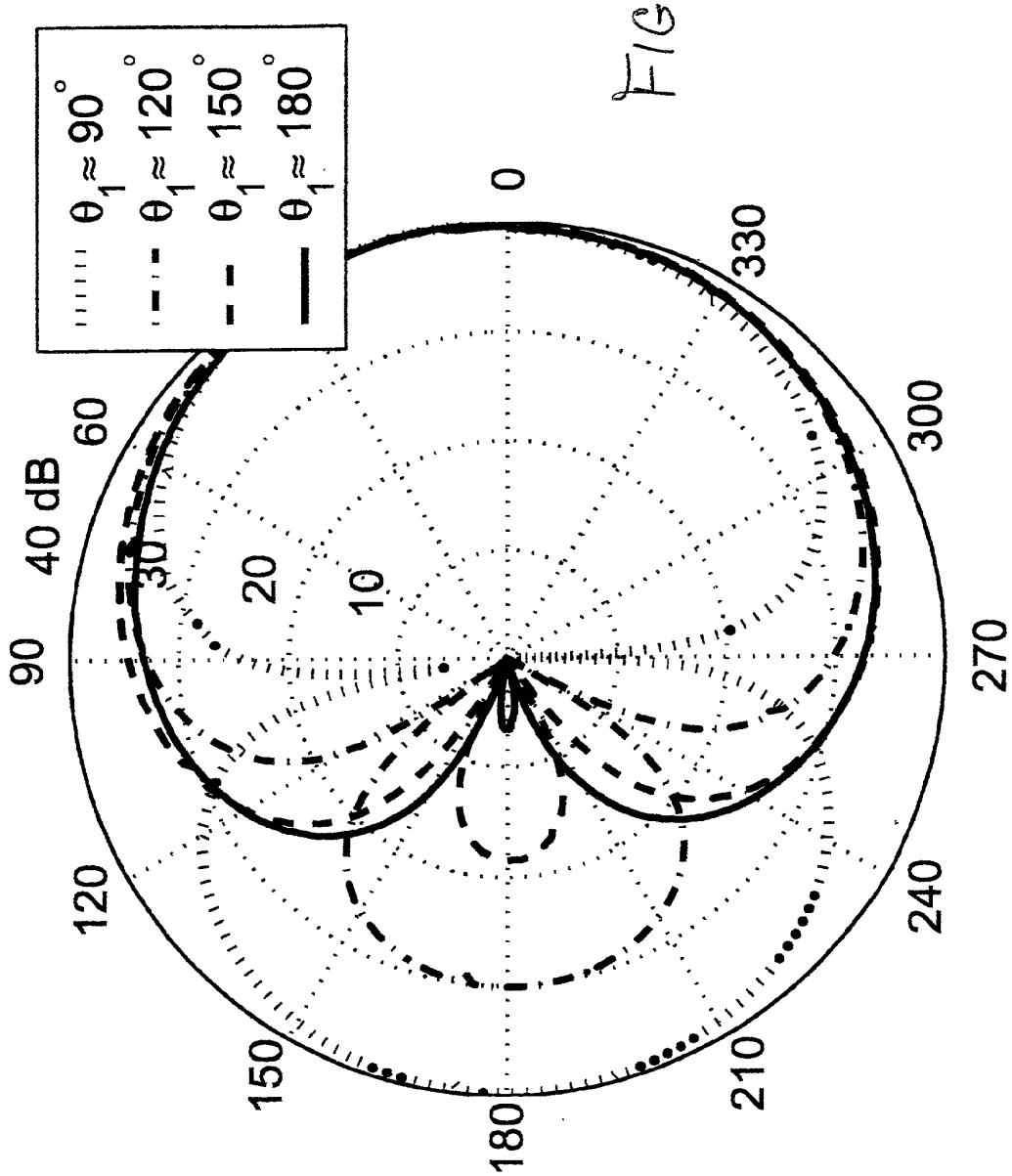
θ1 ≈ 90°
θ1 ≈ 120°
θ1 ≈ 150°
θ1 ≈ 180°
40 dB
30
20
10
0
90
60
120
150
180
210
240
270
300
330

FIG. 10

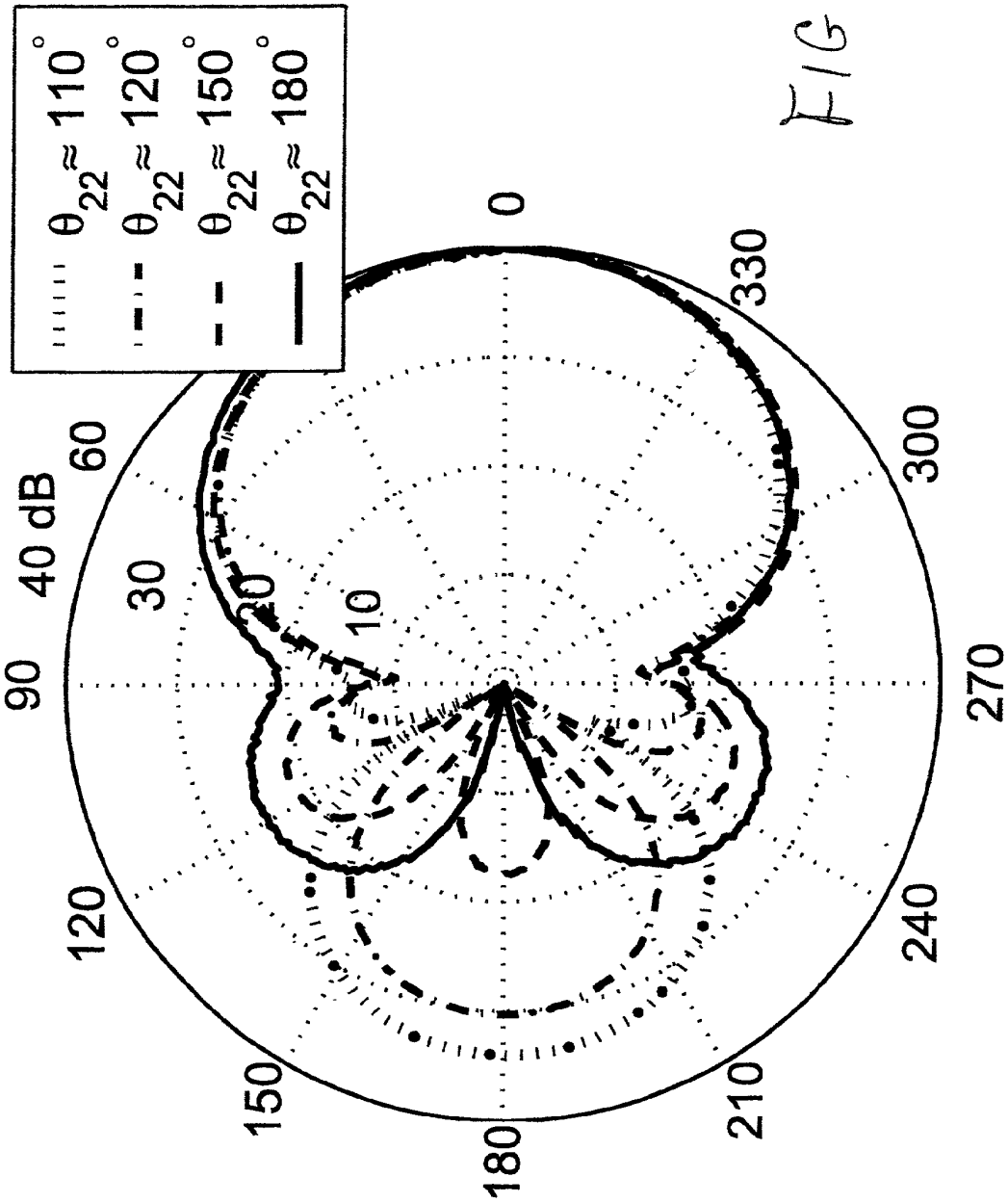
θ22 ≈ 110°
θ22 ≈ 120°
θ22 ≈ 150°
θ22 ≈ 180°
40 dB
30
20
10
0
90
60
120
150
180
210
240
270
300
330

FIG 11

SECOND-ORDER ADAPTIVE DIFFERENTIAL MICROPHONE ARRAY

CROSS-REFERENCE TO RELATED APPLICATIONS

[0001] This application claims the benefit of the filing date of U.S. provisional application No. 60/306,271, filed on Jul. 18, 2001 as attorney docket no. Elko 18-1.

BACKGROUND OF THE INVENTION

[0002] 1. Field of the Invention

[0003] The present invention relates to microphone arrays that employ directionality characteristics to differentiate between sources of noise and desired sound sources.

[0004] 2. Description of the Related Art

[0005] The presence of background noise accompanying all kinds of acoustic signal transmission is a ubiquitous problem. Speech signals especially suffer from incident background noise, which can make conversations in adverse acoustic environments virtually impossible without applying appropriately designed electroacoustic transducers and sophisticated signal processing. The utilization of conventional directional microphones with fixed directivity is a limited solution to this problem, because the undesired noise is often not fixed to a certain angle.

SUMMARY OF THE INVENTION

[0006] Embodiments of the present invention are directed to adaptive differential microphone arrays (ADMAs) that are able to adaptively track and attenuate possibly moving noise sources that are located in the back half plane of the array. This noise attenuation is achieved by adaptively placing a null into the noise source's direction of arrival. Such embodiments take advantage of the adaptive noise cancellation capabilities of differential microphone arrays in combination with digital signal processing. Whenever undesired noise sources are spatially non-stationary, conventional directional microphone technology has its limits in terms of interference suppression. Adaptive differential microphone arrays (ADMAs) with their null-steering capabilities promise better performance.

[0007] In one embodiment, the present invention is a second-order adaptive differential microphone array (ADMA), comprising (a) a first first-order element (e.g., **802** of **FIG. 8**) configured to convert a received audio signal into a first electrical signal; (b) a second first-order element (e.g., **804** of **FIG. 8**) configured to convert the received audio signal into a second electrical signal; (c) a first delay node (e.g., **806** of **FIG. 8**) configured to delay the first electrical signal from the first first-order element to generate a delayed first electrical signal; (d) a second delay node (e.g., **808** of **FIG. 8**) configured to delay the second electrical signal from the second first-order element to generate a delayed second electrical signal; (e) a first subtraction node (e.g., **810** of **FIG. 8**) configured to generate a forward-facing cardioid signal based on a difference between the first electrical signal and the delayed second electrical signal; (f) a second subtraction node (e.g., **812** of **FIG. 8**) configured to generate a backward-facing cardioid signal based on a difference between the second electrical signal and the delayed first electrical signal; (g) an amplifier (e.g., **814** of **FIG. 8**) configured to amplify the backward-facing cardioid signal by a gain parameter to generate an amplified backward-facing cardioid signal; and (h) a third subtraction node (e.g., **816** of **FIG. 8**) configured to generate a difference signal based on a difference between the forward-facing cardioid signal and the amplified backward-facing cardioid signal.

[0008] In another embodiment, the present invention is an apparatus for processing signals generated by a microphone array (ADMA) having (i) a first first-order element (e.g., **802** of **FIG. 8**) configured to convert a received audio signal into a first electrical signal and (ii) a second first-order element (e.g., **804** of **FIG. 8**) configured to convert the received audio signal into a second electrical signal, the apparatus comprising (a) a first delay node (e.g., **806** of **FIG. 8**) configured to delay the first electrical signal from the first first-order element to generate a delayed first electrical signal; (b) a second delay node (e.g., **808** of **FIG. 8**) configured to delay the second electrical signal from the second first-order element to generate a delayed second electrical signal; (c) a first subtraction node (e.g., **810** of **FIG. 8**) configured to generate a forward-facing cardioid signal based on a difference between the first electrical signal and the delayed second electrical signal; (d) a second subtraction node (e.g., **812** of **FIG. 8**) configured to generate a backward-facing cardioid signal based on a difference between the second electrical signal and the delayed first electrical signal; (e) an amplifier (e.g., **814** of **FIG. 8**) configured to amplify the backward-facing cardioid signal by a gain parameter to generate an amplified backward-facing cardioid signal; and (g) a third subtraction node (e.g., **816** of **FIG. 8**) configured to generate a difference signal based on a difference between the forward-facing cardioid signal and the amplified backward-facing cardioid signal.

BRIEF DESCRIPTION OF THE DRAWINGS

[0009] Other aspects, features, and advantages of the present invention will become more fully apparent from the following detailed description, the appended claims, and the accompanying drawings in which:

[0010] **FIG. 1** shows a schematic representation of a first-order adaptive differential microphone array (ADMA) receiving an audio signal from a signal source at a distance where farfield conditions are applicable;

[0011] **FIG. 2** shows a schematic diagram of a first-order fullband ADMA based on an adaptive back-to-back cardioid system;

[0012] **FIG. 3** shows the directivity pattern of the first-order ADMA of **FIG. 2**;

[0013] **FIG. 4** shows directivity patterns that can be obtained by the first-order ADMA for θ_1 , values of 90°, 120°, 150°, and 180°;

[0014] **FIG. 5** shows a schematic diagram of a second-order fullband ADMA;

[0015] **FIG. 6** shows the directivity pattern of a second-order back-to-back cardioid system;

[0016] **FIG. 7** shows the directivity patterns that can be obtained by a second-order ADMA formed from two dipole elements for θ_{22} values of 90°, 120°, 150°, and 180°;

[0017] **FIG. 8** shows a schematic diagram of a subband two-element ADMA;

[0018] **FIGS. 9A and 9B** depict the fullband ADMA directivity patterns for first-order and second-order arrays, respectively; and

[0019] **FIGS. 10 and 11** show measured directivity of first- and second-order subband implementations of the ADMA of **FIG. 8**, respectively, for four simultaneously playing sinusoids.

DETAILED DESCRIPTION

[0020] First-Order Fullband ADMA

[0021] **FIG. 1** shows a schematic representation of a first-order adaptive differential microphone array (ADMA) **100** receiving audio signal s(t) from audio source **102** at a distance where farfield conditions are applicable. When farfield conditions apply, the audio signal arriving at ADMA **100** can be treated as a plane wave. ADMA **100** comprises two zeroth-order microphones **104** and **106** separated by a distance d . Electrical signals generated by microphone **106** are delayed by inter-element delay T at delay node **108** before being subtracted from the electrical signals generated by microphone **104** at subtraction node **110** to generate the ADMA output y(t). The magnitude of the frequency and angular dependent response $H_1(f, \theta)$ of first-order ADMA **100** for a signal point source at a distance where farfield conditions are applicable can be written according to Equation (1) as follows:

$$|H_1(f,\theta)| = \left|\frac{Y_1(f,\theta)}{S(f)}\right| = 1 - e^{-j(2\pi fT + k\cdot d)} = 2\sin 2\pi\frac{f[T + (d\cos\theta)/c]}{2} \quad (1)$$

[0022] where $Y_1(f, \theta)$ is the spectrum of the ADMA output signal y(t), S(f) is the spectrum of the signal source, k is the sound vector, $|k|=k=2\pi f/c$ is the wavenumber, c is the speed of sound, and d is the displacement vector between microphones **104** and **106**. As indicated by the term $Y_1(f, \theta)$, the ADMA output signal is dependent on the angle θ between the displacement vector d and the sound vector k as well as on the frequency f of the audio signal s(t).

[0023] For small element spacing and short inter-element delay ($kd \ll \pi$ and $T \ll \frac{1}{2}f$, Equation (1) can be approximated according to Equation (2) as follows:

$$|H_1(f,\theta)| \approx 2\pi f[T + (d\cos\theta)/c]. \quad (2)$$

[0024] As can be seen, the right side of Equation (2) consists of a monopole term and a dipole term (cosθ). Note that the amplitude response of the first-order differential array rises linearly with frequency. This frequency dependence can be corrected for by applying a first-order lowpass filter at the array output. The directivity response can then be expressed by Equation (3) as follows:

$$D_1(\theta) = \frac{T}{T + d/c} + \left(1 - \frac{T}{T + d/c}\right)\cos\theta. \quad (3)$$

[0025] Since the location of the source **102** is not typically known, an implementation of a first-order ADMA based on Equation (3) would need to involve the ability to generate any time delay T between the two microphones. As such, this approach is not suitable for a real-time system. One way to avoid having to generate the delay T directly in order to obtain the desired directivity response is to utilize an adaptive back-to-back cardioid system

[0026] **FIG. 2** shows a schematic diagram of a first-order fullband ADMA **200** based on an adaptive back-to-back cardioid system. In ADMA **200**, signals from both microphones **202** and **204** are delayed by a time delay T at delay nodes **206** and **208**, respectively. The delayed signal from microphone **204** is subtracted from the undelayed signal from microphone **202** at forward subtraction node **210** to form the forward-facing cardioid signal $C_F(t)$. Similarly, the delayed signal from microphone **202** is subtracted from the undelayed signal from microphone **204** at backward subtraction node **212** to form the backward-facing cardioid signal $c_B(t)$, which is amplified by gain β at amplifier **214**. The signal y(t) is generated at subtraction node **216** based on the difference between the forward and amplified backward signals. The signal y(t) is then lowpass filtered at filter **218** to generate the ADMA output signal $y_{out}(t)$.

[0027] **FIG. 3** shows the directivity pattern of the first-order back-to-back cardioid system of ADMA **200**. ADMA **200** can be used to adaptively adjust the response of the backward facing cardioid in order to track a possibly moving noise source located in the back half plane. By choosing T=d/c , the back-to-back cardioid can be formed directly by appropriately subtracting the delayed microphone signals.

[0028] The transfer function $H_1(f, \theta)$ of first-order ADMA **200** can be written according to Equation (4) as follows:

$$H_1(f,\theta) = \frac{Y_{out}(f,\theta)}{S(f)} = 2je^{-j\pi fT}\left(\sin k\frac{d(1+\cos\theta)}{2} - \beta\sin k\frac{d(1-\cos\theta)}{2}\right). \quad (4)$$

[0029] where $Y_{out}(f, \theta)$ is the spectrum of the ADMA output signal $y_{out}(t)$.

[0030] The single independent null angle θ_1 of first-order ADMA **200**, which, for the present discussion, is assumed to be placed into the back half plane of the array ($90° \leqq \theta_1 \leqq 180°$) , can be found by setting Equation (4) to zero and solving for $\theta=\theta_1$, which yields Equation (5) as follows:

$$\theta_1 = \arccos\left(\frac{2}{kd}\arctan\left(\frac{\beta-1}{\beta+1}\tan\frac{kd}{2}\right)\right), \quad (5)$$

[0031] which for small spacing and short delay can be approximated according to Equation (6) as follows:

$$\theta_1 \approx \arccos\beta - \frac{1}{\beta+1}, \quad (6)$$

[0032] where $0 \leqq \beta \leqq 1$ under the constraint ($90° \theta_1 \leqq 180°$). **FIG. 4** shows the directivity patterns that can be obtained by first-order ADMA **200** for θ_1 values of 90°, 120°, 150°, and 180°.

[0033] In a time-varying environment, an adaptive algorithm is preferably used in order to update the gain parameter β. In one implementation, a normalized least-mean-square (NLMS) adaptive algorithm may be utilized, which is computationally inexpensive, easy to implement, and offers reasonably fast tracking capabilities. One possible real-valued time-domain one-tap NLMS algorithm can be written according to Equation 2 (7a) and (7b) as follows:

$$y(i)=c_F(i)-\beta(i)c_B(i), \tag{7a}$$

[0034]

$$\beta(i+1)=\beta(i)+\frac{\mu}{a+\|c_B(i)\|}c_B(i)y(i), \tag{7b}$$

[0035] where $c_F(i)$ and $c_B(i)$ are the values for the forward- and backward-facing cardioid signals at time instance i, μ is an adaptation constant where $0<\mu<2$, and α is a small constant where $\alpha>0$.

[0036] Further information on first-order adaptive differential microphone arrays is provided in U.S. Pat. No. 5,473,701 (Cezanne et al.), the teachings of which are incorporated herein by reference.

[0037] Second-Order Fullband ADMA

[0038] **FIG. 5** shows a schematic diagram of a second-order fullband ADMA **500** comprising two first-order ADMAs **502** and **504**, each of which is an instance of first-order ADMA **100** of **FIG. 1** having an inter-element delay T_1. After delaying the signal from first-order array **504** by an additional time delay T_2 at delay node **506**, the difference between the two first-order signals is generated at subtraction node **508** to generate the output signal $y_2(t)$ of ADMA **500**.

[0039] When farfield conditions apply, the magnitude of the frequency and angular dependent response $H_2(f, \theta)$ of second-order ADMA **500** is given by Equation (8) as follows:

$$|H_2(f,\theta)|=\left|\frac{Y_2(f,\theta)}{S(f)}\right|=4\prod_{v=1}^{2}\sin 2\pi\frac{f[T_v+(d_v\cos\theta)/c]}{2}, \tag{8}$$

[0040] where $Y_2(f, \theta)$ is the spectrum of the ADMA output signal $y_2(t)$. For the special case of small spacing and delay, i.e., kd_1, $kd_2 \ll \pi$ and T_1, $T_2 \ll \frac{1}{2}f$, Equation (8) may be written as Equation (9) as follows:

$$\left|H_2(f,\theta)\right| \approx (2\pi f)^2\prod_{v=1}^{2}[T_v+(d_v\cos\theta)/c]. \tag{9}$$

[0041] Analogous to the case of first-order differential array **200** of **FIG. 2**, the amplitude response of second-order array **500** consists of a monopole term, a dipole term ($\cos\theta$), and an additional quadrapole term ($\cos^2\theta$). Also, a quadratic rise as a function of frequency can be observed. This frequency dependence can be equalized by applying a second-order lowpass filter. The directivity response can then be expressed by Equation (10) as follows:

$$D_2(\theta)=\prod_{v=1}^{2}\left(\frac{T_v}{T_v+d_v/c}+\left(1-\frac{T_v}{T_v+d_v/c}\right)\cos\theta\right), \tag{10}$$

[0042] which is a direct result of the pattern multiplication theorem in electroacoustics.

[0043] One design goal of a second-order differential farfield array, such as ADMA **500** of **FIG. 5**, may be to use the array in a host-based environment without the need for any special purpose hardware, e.g., additional external DSP interface boards. Therefore, two dipole elements may be utilized in order to form the second-order array instead of four omnidirectional elements. As a consequence, $T_1 \equiv 0$ which means that one null angle is fixed to $\theta_{21}=90°$. In this case, although two independent nulls can be formed by the second-order differential array, only one can be made adaptive if two dipole elements are used instead of four omnidirectional transducers. The implementation of such a second-order ADMA may be based on first-order cardioid ADMA **200** of **FIG. 2**, where $d=d_2$, $T=T_2$, $\beta=\beta_2$, and d_1 is the acoustical dipole length of the dipole transducer. Additionally, the lowpass filter is chosen to be a second-order lowpass filter. **FIG. 6** shows the directivity pattern of such a second-order back-to-back cardioid system. Those skilled in the art will understand that a second-order ADMA can also be implemented with three omnidirectional elements.

[0044] The transfer function $H_2(f, \theta)$ of a second-order ADMA formed of two dipole elements can be written according to Equation (11) as follows:

$$H_2(f,\theta)=\frac{Y_{out}(f,\theta)}{S(f)}=-4e^{-j\pi fT_2}\sin\left(\frac{kd_1\cos\theta}{2}\right)\cdot\left(\sin k\frac{d_2(1+\cos\theta)}{2}-\beta_2\sin k\frac{d_2(1-\cos\theta)}{2}\right), \tag{11}$$

[0045] with null angles given by Equations (12a) and (12b) as follows:

$$\theta_{21}=90°, \tag{12a}$$

[0046]

$$\theta_{22}\approx\arccos\frac{\beta_2-1}{\beta_2+1}, \tag{12b}$$

[0047] where $0 \leqq \beta_2 \leqq 1$ under the constraint $90° \leqq \beta_{22}23$ 180°. **FIG. 7** shows the directivity patterns that can be obtained by a second-order ADMA formed from two dipole elements for θ_{22} values of 90°, 120°, 150°, and 180°.

[0048] As shown in Elko, G. W., "Superdirectional Microphone Arrays,"*Acoustic Signal Processing for Telecommu-*

nication, J. Benesty and S. L. Gay (eds.), pp. 181-236, Kluwer Academic Publishers, 2000, a second-order differential array is typically superior to a first-order differential array in terms of directivity index, front-to-back ratio, and beamwidth.

[0049] Subband ADMA

[0050] **FIG. 8** shows a schematic diagram of a subband two-element ADMA **800** comprising two elements **802** and **804**. When elements **802** and **804** are omnidirectional elements, ADMA **800** is a first-order system; when elements **802** and **804** are dipole elements, ADMA **800** is a second-order system. ADMA **800** is analogous to fullband ADMA **200** of **FIG. 2**, except that one additional degree of freedom is obtained for ADMA **800** by performing the adaptive algorithm independently in different frequency subbands. In particular, delay nodes **806** and **808** of subband ADMA **800** are analogous to delay nodes **206** and **208** of fullband ADMA **200**; subtraction nodes **810**, **812**, and **816** of ADMA **800** are analogous to subtraction nodes **210**, **212**, and **216** of ADMA **200**; amplifier **814** of ADMA **800** is analogous to amplifier **214** of ADMA **200**; and lowpass filter **818** of ADMA **800** is analogous to lowpass filter **218** of ADMA **200**, except that, for ADMA **800**, the processing is independent for different frequency subbands.

[0051] To provide subband processing, analysis filter banks **820** and **822** divide the electrical signals from elements **802** and **804**, respectively, into two or more subbands l, and amplifier **814** can apply a different gain $\beta(l,i)$ to each different subband l in the backward-facing cardioid signal $c_B(l,i)$. In addition, synthesis filter bank **824** combines the different subband signals y(l,i) generated at summation node **816** into a single fullband signal y(t), which is then lowpass filtered by filter **818** to generate the output signal $y_{out}(t)$ of ADMA **800**.

[0052] The gain parameter $\beta(l,i)$, where l denotes the subband bin and i is the discrete time instance, is preferably updated by an adaptive algorithm that minimizes the output power of the array. This update therefore effectively adjusts the response of the backward-facing cardioid $c_B(l,i)$ and can be written according to Equations (13a) and (13b) as follows;

$$y(l,i)=c_F(l,i)-\beta(l,i)c_B(l,i), \tag{13a}$$

[0053]

$$\tilde{\beta}(l,\ i+1)=\beta(l,\ i)+\frac{\mu y(l,\ i)c_B(l,\ i)}{\|c_B(l,\ i)\|^2+a}, \tag{13b}$$

[0054] where

$$\beta(l,\ i)=\begin{cases}\tilde{\beta}(l,\ i), & 0\le\tilde{\beta}(l,\ i)\le 1\\ 0, & \tilde{\beta}(l,\ i)<0\\ 1, & \tilde{\beta}(l,\ i)>1\end{cases}, \tag{14}$$

[0055] and μ is the update parameter and α is a positive constant.

[0056] By using this algorithm, multiple spatially distinct noise sources with non-overlapping spectra located in the back half plane of the ADMA can be tracked and attenuated simultaneously.

[0057] Implementation and Measurements

[0058] PC-based real-time implementations running under the Microsoft™ Windows™ operating system were realized using a standard soundcard as the analog-to-digital converter. For these implementations, the demonstrator's analog front-end comprised two omnidirectional elements of the type Panasonic WM-54B as well as two dipole elements of the type Panasonic WM-55D103 and a microphone preamplifier offering 40-dB gain comprise the analog front-end. The implementations of the first-order ADMAs of **FIGS. 2 and 8** utilized the two omnidirectional elements and the preamplifier, while the implementation of the second-order ADMA of **FIG. 5** utilized the two dipole elements and the preamplifier.

[0059] The signals for the forward-facing cardioids $c_F(t)$ and the backward-facing cardioids $c_B(t)$ of the first-order ADMAs of **FIGS. 2 and 8** were obtained by choosing the spacing d between the omnidirectional microphones such that there is one sample delay between the corresponding delayed and undelayed microphone signals. Similarly, the signals for the forward- and backward-facing cardioids of the second-order ADMA of **FIG. 5** were obtained by choosing the spacing d_2 between the dipole microphones such that there is one sample delay between the corresponding delayed and undelayed microphone signals. Thus, for example, for a sampling frequency f_s of 22050 Hz, the microphone spacing $d=d_2=1.54$ cm. For the Panasonic dipole elements, the acoustical dipole length d_1 was found to be 0.8 cm.

[0060] **FIGS. 9A and 9B** depict the fullband ADMA directivity patterns for first-order and second-order arrays, respectively. These measurements were performed by placing a broadband jammer (noise source) at approximately 90° with respect to the array's axis (i.e., θ_1 for the first-order array and θ_{22} for the second-order array) utilizing a standard directivity measurement technique. It can be seen that deep nulls covering wide frequency ranges are formed in the direction of the jammer.

[0061] **FIGS. 10 and 11** show measured directivity of first- and second-order subband implementations of ADMA **800** of **FIG. 8**, respectively, for four simultaneously playing sinusoids. For the first-order subband implementation, four loudspeakers simultaneously played sinusoidal signals while positioned in the back half plane of the arrays at θ_1 values of approximately 90°, 120°, 150°, and 180°. For the second-order subband implementation, four loudspeakers simultaneously played sinusoidal signals while positioned in the back half plane of the arrays at θ_{22} values of approximately 110°, 120°, 150°, and 180°. As can be seen, these measurements are in close agreement with the simulated patterns shown in **FIGS. 4 and 7**.

[0062] In order to combat the noise amplification properties inherent in differential arrays, the demonstrator included a noise reduction method as presented in Diethorn, E. J., "A Subband Noise-Reduction Method for Enhancing Speech in Telephony & Teleconferencing,"*IEEE Workshop on Applications of Signal Processing to Audio and Acoustics*, Mohonk, USA, 1997, the teachings of which are incorporated herein by reference.

[0063] Conclusions

[0064] First- and second-order ADMAs which are able to adaptively track and attenuate a possibly moving noise source located in the back half plane of the arrays have been presented. It has been shown that, by performing the calculations in subbands, even multiple spatially distinct noise sources with non-overlapping spectra can be tracked and attenuated simultaneously. The real-time implementation presents the dynamic performance of the ADMAs in real acoustic environments and shows the practicability of using these arrays as acoustic front-ends for a variety of applications including telephony, automatic speech recognition, and teleconferencing.

[0065] The present invention may be implemented as circuit-based processes, including possible implementation on a single integrated circuit. As would be apparent to one skilled in the art, various functions of circuit elements may also be implemented as processing steps in a software program. Such software may be employed in, for example, a digital signal processor, micro-controller, or general-purpose computer.

[0066] The present invention can be embodied in the form of methods and apparatuses for practicing those methods. The present invention can also be embodied in the form of program code embodied in tangible media, such as floppy diskettes, CD-ROMs, hard drives, or any other machine-readable storage medium, wherein, when the program code is loaded into and executed by a machine, such as a computer, the machine becomes an apparatus for practicing the invention. The present invention can also be embodied in the form of program code, for example, whether stored in a storage medium, loaded into and/or executed by a machine, or transmitted over some transmission medium or carrier, such as over electrical wiring or cabling, through fiber optics, or via electromagnetic radiation, wherein, when the program code is loaded into and executed by a machine, such as a computer, the machine becomes an apparatus for practicing the invention. When implemented on a general-purpose processor, the program code segments combine with the processor to provide a unique device that operates analogously to specific logic circuits.

[0067] The use of figure reference labels in the claims is intended to identify one or more possible embodiments of the claimed subject matter in order to facilitate the interpretation of the claims. Such labeling is not to be construed as necessarily limiting the scope of those claims to the embodiments shown in the corresponding figures.

[0068] It will be further understood that various changes in the details, materials, and arrangements of the parts which have been described and illustrated in order to explain the nature of this invention may be made by those skilled in the art without departing from the scope of the invention as expressed in the following claims.

What is claimed is:

1. A second-order adaptive differential microphone array (ADMA), comprising:

(a) a first first-order element (e.g., **802** of **FIG. 8**) configured to convert a received audio signal into a first electrical signal;

(b) a second first-order element (e.g., **804** of **FIG. 8**) configured to convert the received audio signal into a second electrical signal;

(c) a first delay node (e.g., **806** of **FIG. 8**) configured to delay the first electrical signal from the first first-order element to generate a delayed first electrical signal;

(d) a second delay node (e.g., **808** of **FIG. 8**) configured to delay the second electrical signal from the second first-order element to generate a delayed second electrical signal;

(e) a first subtraction node (e.g., **810** of **FIG. 8**) configured to generate a forward-facing cardioid signal based on a difference between the first electrical signal and the delayed second electrical signal;

(f) a second subtraction node (e.g., **812** of **FIG. 8**) configured to generate a backward-facing cardioid signal based on a difference between the second electrical signal and the delayed first electrical signal;

(g) an amplifier (e.g., **814** of **FIG. 8**) configured to amplify the backward-facing cardioid signal by a is gain parameter to generate an amplified backward-facing cardioid signal; and

(h) a third subtraction node (e.g., **816** of **FIG. 8**) configured to generate a difference signal based on a difference between the forward-facing cardioid signal and the amplified backward-facing cardioid signal.

2. The invention of claim 1, further comprising a lowpass filter (e.g., **818** of **FIG. 8**) configured to filter the difference signal from the third subtraction node to generate an output signal for the second-order ADMA.

3. The invention of claim 1, wherein the first and second first-order elements are two dipole elements.

4. The invention of claim 1, wherein each of the first and second first-order elements is a first-order differential microphone array (e.g., **100** of **FIG. 1**).

5. The invention of claim 4, wherein each first-order differential microphone array comprises:

(1) a first omnidirectional element (e.g., **104** of **FIG. 1**) configured to convert the received audio signal into an electrical signal;

(2) a second omnidirectional element (e.g., **106** of **FIG. 1**) configured to convert the received audio signal into an electrical signal;

(3) a delay node (e.g., **108** of **FIG. 1**) configured to delay the electrical signal from the second omnidirectional element to generate a delayed electrical signal; and

(4) a first subtraction node (e.g., **110** of **FIG. 1**) configured to generate the corresponding electrical signal for the first-order element based on a difference between the electrical signal from the first omnidirectional element and the delayed electrical signal from the delay node.

6. The invention of claim 1, wherein the gain parameter for the amplifier is configured to be adaptively adjusted to move a null located in a back half plane of the second-order ADMA to track a moving noise source.

7. The invention of claim 6, wherein the gain parameter is configured to be adaptively adjusted to minimize output power from the second-order ADMA.

8. The invention of claim 1, further comprising:

(i) a first analysis filter bank (e.g., **820** of **FIG. 8**) configured to divide the first electrical signal from the

first first-order element into two or more subband electrical signals corresponding to two or more different frequency subbands;

(j) a second analysis filter bank (e.g., **822** of **FIG. 8**) configured to divide the second electrical signal from the second first-order element into two or more subband electrical signals corresponding to the two or more different frequency subbands; and

(k) a synthesis filter bank (e.g., **824** of **FIG. 8**) configured to combine two or more different subband difference signals generated by the third difference node to form a fullband difference signal.

9. The invention of claim 8, wherein the amplifier is configured to apply a different subband gain parameter to a backward-facing subband cardioid signal generated by the second subtraction node for each different frequency subband.

10. The invention of claim 9, wherein each different subband gain parameter is configured to be adaptively adjusted to move a different null in a back half plane of the second-order ADMA to track a different moving noise source corresponding to each different frequency subband.

11. The invention of claim 10, wherein each different subband gain parameter is configured to be adaptively adjusted to minimize output power from the second-order ADMA in the corresponding frequency subband.

12. An apparatus for processing signals generated by a microphone array (ADMA) having (i) a first first-order element (e.g., **802** of **FIG. 8**) configured to convert a received audio signal into a first electrical signal and (ii) a second first-order element (e.g., **804** of **FIG. 8**) configured to convert the received audio signal into a second electrical signal, the apparatus comprising:

(a) a first delay node (e.g., **806** of **FIG. 8**) configured to delay the first electrical signal from the first first-order element to generate a delayed first electrical signal;

(b) a second delay node (e.g., **808** of **FIG. 8**) configured to delay the second electrical signal from the second first-order element to generate a delayed second electrical signal;

(c) a first subtraction node (e.g., **810** of **FIG. 8**) configured to generate a forward-facing cardioid signal based on a difference between the first electrical signal and the delayed second electrical signal;

(d) a second subtraction node (e.g., **812** of **FIG. 8**) configured to generate a backward-facing cardioid signal based on a difference between the second electrical signal and the delayed first electrical signal;

(e) an amplifier (e.g., **814** of **FIG. 8**) configured to amplify the backward-facing cardioid signal by a gain parameter to generate an amplified backward-facing cardioid signal; and

(g) a third subtraction node (e.g., **816** of **FIG. 8**) configured to generate a difference signal based on a difference between the forward-facing cardioid signal and the amplified backward-facing cardioid signal.

13. The invention of claim 12, further comprising a lowpass filter (e.g., **818** of **FIG. 8**) configured to filter the difference signal from the third subtraction node to generate an output signal for the second-order ADMA.

14. The invention of claim 12, wherein the first and second first-order elements are two dipole elements.

15. The invention of claim 12, wherein each of the first and second first-order elements is a first-order differential microphone array (e.g., **100** of **FIG. 1**).

16. The invention of claim 15, wherein each first-order differential microphone array comprises:

(1) a first omnidirectional element (e.g., **104** of **FIG. 1**) configured to convert the received audio signal into an electrical signal;

(2) a second omnidirectional element (e.g., **106** of **FIG. 1**) configured to convert the received audio signal into an electrical signal;

(3) a delay node (e.g., **108** of **FIG. 1**) configured to delay the electrical signal from the second omnidirectional element to generate a delayed electrical signal; and

(4) a first subtraction node (e.g., **110** of **FIG. 1**) configured to generate the corresponding electrical signal for the first-order element based on a difference between the electrical signal from the first omnidirectional element and the delayed electrical signal from the delay node.

17. The invention of claim 12, wherein the gain parameter for the amplifier is configured to be adaptively adjusted to move a null located in a back half plane of the second-order ADMA to track a moving noise source.

18. The invention of claim 17, wherein the gain parameter is configured to be adaptively adjusted to minimize output power from the second-order ADMA.

19. The invention of claim 12, further comprising:

(g) a first analysis filter bank (e.g., **820** of **FIG. 8**) configured to divide the first electrical signal from the first first-order element into two or more subband electrical signals corresponding to two or more different frequency subbands;

(h) a second analysis filter bank (e.g., **822** of **FIG. 8**) configured to divide the second electrical signal from the second first-order element into two or more subband electrical signals corresponding to the two or more different frequency subbands; and

(i) a synthesis filter bank (e.g., **824** of **FIG. 8**) configured to combine two or more different subband difference signals generated by the third difference node to form a fullband difference signal.

20. The invention of claim 19, wherein the amplifier is configured to apply a different subband gain parameter to a backward-facing subband cardioid signal generated by the second subtraction node for each different frequency subband.

21. The invention of claim 20, wherein each different subband gain parameter is configured to be adaptively adjusted to move a different null in a back half plane of the second-order ADMA to track a different moving noise source corresponding to each different frequency subband.

22. The invention of claim 21, wherein each different subband gain parameter is configured to be adaptively adjusted to minimize output power from the second-order ADMA in the corresponding frequency subband.

* * * * *