Trials@uspto.gov
571-272-7822

Paper 12
Date: September 6, 2022

UNITED STATES PATENT AND TRADEMARK OFFICE

BEFORE THE PATENT TRIAL AND APPEAL BOARD

EDWARDS LIFESCIENCES CORPORATION, and
EDWARDS LIFESCIENCES LLC,
Petitioner,

v.

AORTIC INNOVATIONS, LLC,
Patent Owner.

IPR2022-00549
Patent 11,129,735 B2

Before JOHN G. NEW, JASON W. MELVIN, and RYAN H. FLAX, *Administrative Patent Judges.*

NEW, *Administrative Patent Judge*.

DECISION
Denying Institution of *Inter Partes* Review
35 U.S.C. § 314, 37 C.F.R. § 42.4

Edwards v. Aortic Innovations
U.S. Patent 11,389,310
Edwards Ex. 1121

I. INTRODUCTION

Petitioner Edwards Lifesciences Corporation, And Edwards Lifesciences LLC ("Petitioner") has filed a Petition (Paper 1, "Pet.") seeking *inter partes* review of claims 1–9, 11, and 12 of US Patent 11,129,735 B2 (Ex. 1001, the "'735 patent"). Patent Owner Aortic Innovations, LLC ("Patent Owner") timely filed a Preliminary Response. Paper 8 ("Prelim. Resp."). With our authorization, Patent Owner filed a Supplemental Brief[1] (Paper 10, "Supp. Br.") and Petitioner filed a Reply Brief to the Supplemental Brief (Paper 11).

Under 35 U.S.C. § 314, the Board "may not authorize an *inter partes* review to be instituted unless … the information presented in the petition … and any response … shows that there is a reasonable likelihood that the petitioner would prevail with respect to at least 1 of the claims challenged in the petition." Having considered the Petition, the Preliminary Response, the Supplemental and Reply Briefs, and the evidence of record, we determine that the evidence presented fails to demonstrate a reasonable likelihood that

[1] In its Supplemental Brief, Patent Owner introduces photographs that were suppled in the parallel district court litigation as part of Petitioner's Preliminary Invalidity Contentions. *See* Supp. Br. 2–3. According to Petitioner, these photographs depict various views of the 9000MIS prosthetic transcatheter cardiac valve that Patent Owner alleges is identical to the valve disclosed by the Walther reference. *Id.*

It is not clear to us whether photographs included with Petitioner's Preliminary Invalidity Contentions in the district court litigation qualify as a "printed publication" for the purposes of 35 U.S.C. § 311(b). However, because we deny institution based upon the references cited in the Petition, and do not rely upon the evidence provided in Patent Owner's Supplemental Brief, we need not address that question.

Petitioner would prevail in establishing the unpatentability of at least one challenged claim of the ’735 patent.

II. BACKGROUND

A. Real Parties in Interest

Petitioner identifies Edwards Lifesciences Corp. and Edwards Lifesciences LLC, as the real parties-in-interest. Pet. 111. Patent Owner identifies Aortic Innovations, LLC as the real party-in-interest. Paper 4, 1.

B. Related Matters

Petitioner represents that it has filed a Petition for *inter partes* review of U.S. Patent No. 10,792,172 (the “’172 patent”) in *Edwards Lifesciences Corp. v. Aortic Innovations, LLC*, IPR2021-01527 (Filed Sept. 10, 2021). Pet. 108. Petitioner states that it has also filed a Petition for *inter partes* review of U.S. Patent No. 10,857,011 (“the ’011 patent”) in *Edwards Lifesciences Corp. v. Aortic Innovations, LLC*, IPR2021-01584 (Filed Sept. 28, 2021). *Id.* at 108–109. Petitioner has additionally filed a Petition for *inter partes* review of U.S. Patent No. 10,966,846 (the “’846 patent”) in *Edwards Lifesciences Corp. v. Aortic Innovations, LLC*, IPR2022-00034 (Filed Oct. 11, 2021). *Id.* at 109. Petitioner has also filed a Petition for *inter partes* review of U.S. Patent No. 10,881,538 (the “’538 patent”) in *Edwards Lifesciences Corp. v. Aortic Innovations*, LLC, IPR2022-00193 (Filed Nov. 11, 2021). *Id.* Petitioner has also filed a Petition for *inter partes* review of U.S. Patent No. 10,987,236 B2 (the “’236 patent”) in *Edwards Lifesciences Corp. v. Aortic Innovations, LLC*, IPR2022-0556 (Filed February 4, 2022). *Id.* Petitioner asserts that the ’735 patent is part of the same patent family

and shares a common specification with the ’172, ’011, ’846, ’538, and ’326 patents. *Id.*

Further, Petitioner and Patent Owner both identify *Aortic Innovations LLC v. Edwards Lifesciences Corp.*, Case No. 1-21-CV-01377 (D. De., filed Sept. 28, 2021), in which Patent Owner alleges infringement of the ’735 patent, ’538 patent, the ’846 patent, and ’236 patents by Petitioner. Pet. 109; Paper 3, 1.

C. The Asserted Grounds of Unpatentability

Petitioner contends that claims 1–9, 11, and 12 of the ’735 patent are unpatentable, based upon the following grounds:

Ground	Claim(s) Challenged	35 U.S.C. §	Reference(s)/Basis
1	1, 3-6, 8-9, 11-12	103	Cribier[2], Walther[3]
2	1–9, 11, 12	103	Spenser[4], Walther
3	1–9, 11, 12	103	Spenser, Spenser II[5]
4	1–9, 12	103	Levi, Walther
5	1–9, 12	103	Levi, Spenser II

[2] A. Cribier et al., *Technique of Transcatheter Aortic Valve Implantation with the Edwards-Sapien® Heart Valve Using the Transfemoral Approach*, 34 HERZ 347–56 (2009) (“Cribier”) Ex. 1012.

[3] T. Walther et al., *Trans-Catheter Valve-in-Valve Implantation: in vitro Hydrodynamic Performance of the SAPIEN + Cloth Trans-Catheter Heart Valve in the Carpentier-Edwards Perimount Valves*, 40 EUR. JOUR. CARDIO-THORACIC SURG. 1120–26 (2011) (“Walther”) Ex. 1007.

[4] Spenser et al. (US 7,510,575 B2, March 31, 2009) (“Spenser”) Ex. 1010.

[5] Spenser et al. (WO 2006/005015 A2, January 12, 2006) (“Spenser II”) Ex. 1011.

Petitioner also relies upon the Declaration of Dr. Nigel P. Buller (the "Buller Declaration," Ex. 1003). Patent Owner relies upon the Declaration of Dr. Stephen J.D. Brecker (the "Brecker Declaration," Ex. 2002).

D. The '735 Patent

The '735 patent is titled "Transcatheter Valve Repair Having Improved Paravalvular Seal." Ex. 1001, code (54). The '735 patent issued from Appl. No. 17/170,957 (the "'957 application"), which claims priority through a series of continuation and divisional applications to US Appl. Ser. No. 13/706,896, filed on December 6, 2012. *Id.* at codes (21), (60). The '735 patent also claims priority to US Provisional Appl. No. 61/723,446, filed on Nov. 7, 2012, and US Provisional Appl. No. 61/567,458, filed on Dec. 6, 2011. *Id.* at code (60).[6]

---

[6] According to Petitioner, "[d]uring prosecution of U.S. Patent No. 10, 792,172 (the "'172 patent), a parent to the '846 patent, Patent Owner stated that the application's 'effective filing date . . . is believed to be based on Provisional Patent Application No. 61/723,446, filed on November 7, 2012.'" Pet. 20 (quoting Ex. 1002, 274). Petitioner also asserts that "[t]his admission also applies to the challenged claims, which are similar in scope to the '172 patent claims." *Id.*

Petitioner argues that "the '846 patent is not entitled to a priority date of December 6, 2011 because the '458 provisional does not adequately support or enable the '846 patent's claims." Pet. 21 (citing *New Railhead Mfg., L.L.C. v. Vermeer Mfg. Co.*, 298 F.3d 1290, 1294 (Fed. Cir. 2002). Petitioner contends that "Patent Owner first added the disclosure of outwardly extending fibers in the November 2012 provisional." *Id.* (citing Ex. 1006 ¶ 24). Because all the asserted references bear a publication or filing date that antedates the earlier priority date of the'458 provisional, we need not address at this stage whether the '172 patent claims are entitled to claim priority to the '458 provisional.

The ’735 patent discloses an endograft device, including a transcatheter heart valve, used for endovascular repair of ascending aortic aneurysms. Ex. 1001, col. 2, ll. 53–54. Specifically, the Specification discloses that “[t]he endograft device also includes a valve element that is secured to the balloon-expandable frame at the proximal end of the second prosthetic component.” *Id.* at col. 3, ll. 1–3. According to the Specification, none of the devices then in clinical use for endovascular repair of ascending aortic aneurysms “have been designed with the purpose of endovascular repair of multiple types of ascending aortic aneurysms.” *Id.* at col. 2, ll. 35–40. The Specification therefore describes a need for a device:

> [T]hat can treat different anatomical variations of ascending aortic aneurysms, create effective proximal and distal seal zones within the aorta, and have a durable valve component, but that also allows for future valve re-interventions. A device is also needed that would allow for treatment of different coronary anatomical variations among the patient population, allow future coronary re-intervention, but that also avoids coronary compression, and enables treatment of possible paravalvular leaks.

Id. at col. 2, ll. 45–50.

Figure 11 of the ’735 patent depicts a portion of the valve element of the claimed device, and is reproduced below.

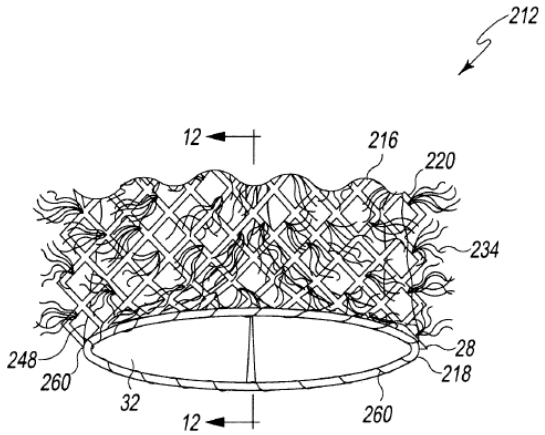

Fig. 11

Figure 11 of the ’735 patent is a perspective view a proximal end of the proximal prosthetic component

As shown above, component 212 includes a dual-frame structure with a circular inner frame 218 secured to circular outer frame 216 via a plurality of stitches 260. Ex. 1001 col. 14, ll. 8–10, Fig. 11.

Figure 13 of the ’735 patent depicts a different view of the relevant portion of the invention and is reproduced below.

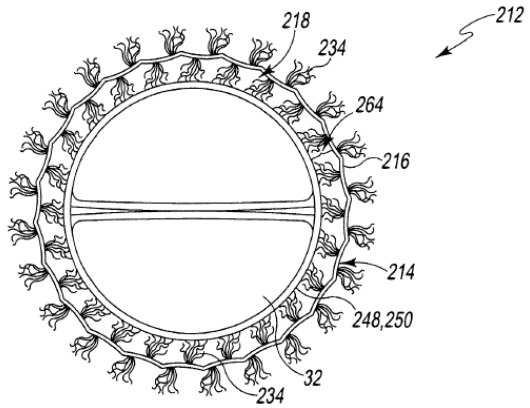

Fig. 13

FIG. 13 of the ’735 patent is a plan view of the proximal prosthetic component showing the inner frame in an unexpanded position

As shown above, the device with circular dual frame component 214 includes an outer frame 216 secured to a balloon-expandable inner frame 218. Ex. 1001 col. 14, ll. 8–10 at Fig. 13.

As also shown in Figures 11 and 13, the inner frame 218 houses the prosthetic valve 32. Ex. 1001 col. 13, ll. 42, Fig. 13. Collagen fibers 234 extend outwardly and inwardly from outer frame 216. *Id.* at col. 12, ll. 45–48, Fig. 13. Outer frame 216 is a grid with diagonally oriented members compared to those at the proximal end of the device. *See* Fig. 11. Figures 11 and 13 also illustrate fibers 234 extending outwardly from proximal section 220 and inwardly into the passageway formed by the stent. *Id.* at col. 14, ll. 29–35, Figs. 11, 13. According to the Specification, these collagen fibers 234 "aid in preventing paravalvular leaks and migration of the proximal component **212** within the aortic walls." *Id.* at col. 12, ll. 46–48.

The Specification further describes "[b]alloon-expandable frame **218** … as a balloon-expandable tubular stent **244**." Ex. 1001, col. 13, ll. 40–45. "[S]tent **244** is tubular and is constructed of a metallic material, such as, nitinol, stainless steel, or other implant grade metallic material, in an open-cell configuration." *Id.* at col. 13, ll. 48–50. "When the inner frame **218** is unexpanded, the outer surface **248** of the stent **244** is spaced apart from the fibers **234** attached to the outer frame **216**." *Id.* at Fig. 13, col. 14, ll. 15–18. When inner frame 218 is expanded, outer surface 248 of stent 244 engages fibers 234 through covering material 250, thereby closing gap 264 so that fibers 234 and covering material 250 create a seal between inner frame 218 and outer frame 216. *Id.* at col. 14, ll. 19–32, Fig. 13.

E. The Challenged Claims

Claims 1–9, 11, and 12 are the challenged claims in this proceeding. *See* Section II. A. above. Claim 1 is the sole independent claim and recites:

> 1. An endovascular transcatheter valve assembly comprising:
>
> an outer frame,
>
> wherein the outer frame is formed from a metallic material and defines an open cell configuration wherein the outer frame includes an inflow end at a proximal portion thereof and an outflow end at a distal portion thereof,
>
> wherein the outer frame is formed by a plurality of struts that adjoin each other at the inflow end to form apices an inner frame that engages a prosthetic heart valve having prosthetic leaflets, wherein the inner frame includes a cylindrically extending inner graft covering extending at least partially radially outwardly of the prosthetic heart valve and radially inwardly of the outer frame for providing sealing to the prosthetic heart valve,
>
> wherein the outer frame is secured to the inner graft covering by stitching a proximal portion of the outer frame;
>
> an outer seal for preventing paravalvular leaks that at least partially extends over at least two most proximal rows of cells formed in the outer frame,
>
> wherein the outer seal is formed of outwardly extending fibers positioned externally to the outer frame,
>
> wherein the valve assembly has a radially compressed orientation and a radially expanded orientation,
>
> wherein the valve assembly is configured to press some of the fibers against native leaflets of the aorta of the patient
>
> wherein an end of the apices of the outer frame that are most proximal are uncovered by the outer seal and the graft covering,
>
> wherein the end of the most proximal apices of the outer frame extends more proximally than a proximal end of the outer seal.

Ex. 1001, cols. 21–22, ll. 16–12.

F. Prosecution History of the '735 patent

The '735 patent matured from U.S. Appl. Ser. No. 17/170,957, which was filed on February 9, 2021, with original claims 1–10. Ex. 1001, codes (21), (22); Ex. 1002, 517–519. The applicant filed a Preliminary Amendment on March 27, 2021, replacing the original claims with new claims 11–25. Ex. 1002, 379–383.

The Examiner entered a Non-Final Office Action on April 30, 2021, rejecting claims 11, 12 and 15–25 as unpatentable under 35 U.S.C. 103(a) as being obvious over the combination of Nguyen et al. (WO 2006/124649; US family version US 2006/0259136) in view of Greenhalgh (US 2002/0052649). Ex. 1002, 298–301.

On May 21, 2021, Patent Owner submitted a terminal disclaimer to obviate a double patenting rejection over prior U.S. Patents 10,792,172 B2, 10,857,011 B2, 10,881,538 B1, 10,888,441 B1, 10,966,846 B2, and 10,987,236 B2. Ex. 1002, 284. The Patent Owner also canceled claims 12–14, 17, 19, and 23, and amended claim 11. *Id.* at 279–281.

The Examiner issued a Notice of Allowance for claims 11, 15–18, 20–22, and 24–28 (now claims 1–12) on August 23, 2021. Ex. 1002, 15–22.

III. ANALYSIS

A. Claim Construction

The Board applies the same claim construction standard that would be used to construe the claim in a civil action under 35 U.S.C. § 282(b). *See* 37 C.F.R. § 100(b) (2020). Under that standard, claim terms "are generally given their ordinary and customary meaning" as understood by a person of ordinary skill in the art at the time of the invention. *Phillips v. AWH Corp.*, 415 F.3d 1303, 1312–13 (Fed. Cir. 2005) (en banc). "In determining the

meaning of the disputed claim limitation, we look principally to the intrinsic evidence of record, examining the claim language itself, the written description, and the prosecution history, if in evidence." *DePuy Spine, Inc. v. Medtronic Sofamor Danek, Inc.*, 469 F.3d 1005, 1014 (Fed. Cir. 2006) (citing *Phillips*, 415 F.3d at 1312–17). Extrinsic evidence is "less significant than the intrinsic record in determining 'the legally operative meaning of claim language.'" *Phillips*, 415 F.3d at 1317 (quoting *C.R. Bard, Inc. v. U.S. Surgical Corp.*, 388 F.3d 858, 862 (Fed. Cir. 2004)).

Neither Petitioner nor Patent Owner proposes a construction for any claim terms apart from their plain and customary meaning. Pet. 30; *see generally* Prelim. Resp. Nor do we perceive a need to construe any claim terms of the '735 patent for purposes of determining whether to institute trial. *See Vivid Techs., Inc. v. Am. Sci. & Eng'g, Inc.*, 200 F.3d 295, 803 (Fed. Cir. 1999) (holding that "only those terms need to be construed that are in controversy, and only to the extent necessary to resolve the controversy"); *see also Nidec Motor Corp. v. Zhongshan Broad Ocean Motor Co.*, 868 F.3d 1013, 1017 (Fed. Cir. 2017) (applying *Vivid Techs.* in the context of an *inter partes* review).

B. A Person of Ordinary Skill in the Art

Petitioner asserts that a person of ordinary skill in the art would have been an interventional cardiologist with a working knowledge of heart valve designs and endovascular prostheses. Pet. 30. Petitioner contends that such a skilled artisan would, when necessary, work as a member of a team in combination with a medical device engineer to experiment with, or manufacture, a prosthetic heart valve. *Id.* (citing Ex. 1003 ¶ 45). Patent Owner does not argue otherwise. *See generally* Prelim. Resp.

At this stage of the proceeding, and for purposes of our analysis in this Decision, we adopt Petitioner's definition because we find that that definition is consistent with the level of skill reflected by the prior art. *See generally, e.g.*, Exs. 1007, 1010, 1011, 1012; *see also Okajima v. Bourdeau*, 261 F.3d 1350, 1355 (Fed. Cir. 2001) (explaining that specific findings regarding ordinary skill level are not required "where the prior art itself reflects an appropriate level and a need for testimony is not shown" (quoting *Litton Indus. Prods., Inc. v. Solid State Sys. Corp.*, 755 F.2d 158, 163 (Fed. Cir. 1985))).

C. Grounds 1–7: claim 1

1. Introduction

Because we find whether Petitioner has shown the prior art teaches the limitations of independent claim 1 reciting "wherein an end of the apices of the outer frame that are most proximal are uncovered by the outer seal and the graft covering" and "wherein the end of the most proximal apices of the outer frame extends more proximally than a proximal end of the outer seal" to be dispositive, we immediately turn to consideration of these limitations. Petitioner relies on Walther (Grounds 1, 2, and 4), Spenser II (Grounds 3 and 5) and Levi (Grounds 4 and 5) as teaching these limitations. Pet. 49–54, 84–87, 109–111. We consider each in turn.

2. Grounds 1 and 2: Cribier or Spenser and Walther

a. Overview of Walther (Ex. 1007)

Walther is an article published in the European Journal of Cardio-thoracic Surgery that bears a copyright date of 2011. Ex. 1007, 1120.

Petitioner contends that Walther was published online on April 3, 2011, and qualifies as prior art under pre-AIA 35 U.S.C. § 102(b). Pet. 29.

Walther is directed to a method of deploying a trans-catheter valve into a previously implanted degenerative bioprosthetic valve. Ex. 1007, 1120. Specifically, Walther describes implanting an Edwards SAPIEN transcatheter heart valve ("THV"), "which is identical to the SAPIEN model, but has an added outer cloth for implantation" into a Carpentier-Edwards Perimount (CEP) bioprosthetic valve as part of a benchtop analysis of function. *Id.* Walther discloses that:

> The CEP surgical valves are made with a base that is more rigid than other valves. When a SAPIEN™ valve is expanded in the CEP valve, the rigid base does not easily conform to the profile of the expanded stent frame, which leaves gaps between the two valves, resulting in higher paravalvular leak. The addition of an outer cloth to the SAPIEN™ cloth valve is designed to reduce paravalvular leak by creating a seal between the two valves and improve resistance to migration with better 'fit' within surgical Perimount valves.

Id. Additionally, Walther discloses that the outer cloth "reduce[s] paravalvular leak," "increase[s] 'fit' within EW Perimount valves [a benchtop valve]," and "promote[s] tissue ingrowth, which further decreases paravalvular leakage." *Id.* Figure 1 of Walther is reproduced below:

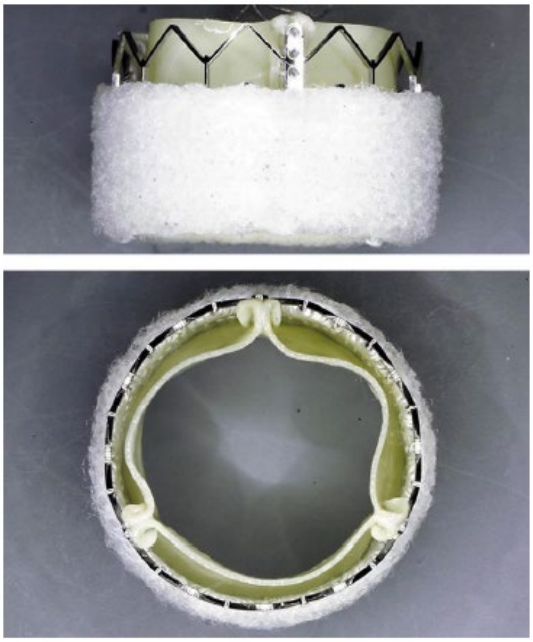

Fig. 1. Cloth valve.

Figure 1 of Walther depicts lateral (top) and distal apical plan views of the SAPIEN THV

Figure 1 of Walther provides two photographic views (side view and top-down view) of the SAPIEN THV with a cloth encircling the lower two thirds of the valve. *Id.* at Fig. 1, 1121.

b. "the apices of the outer frame that are most proximal are uncovered by the outer seal and the graft covering"

Petitioner argues that Walther discloses an outer cloth stitched to the "perimeter" of the SAPIEN valves. Pet. 50 (citing Ex. 1007, 1121). Petitioner asserts that Walther contains no disclosure that the outer cloth wraps around or covers the proximal apices of the frame. *Id.* (citing Ex. 1003 ¶ 147). Petitioner points to Figure 2 of Walther, and argues that the outer cloth is also not sutured to the inside of the valve or visible inside the valve. *Id.* The portion of Figure 2 that Petitioner indicates is reproduced below:

Fig. 2. Cloth THV valve deployed in surgical valve.

Figure 2 (detail) of Walther depicts a perspective view of the distal portion of the cloth-covered SAPIEN valve positioned within a Carpentier-Edwards Perimount (CEP) bioprosthetic valve

Therefore, Petitioner argues, a person of ordinary skill in the art would have understood that Walther's outer cloth does not cover the ends of the proximal apices. (Ex. 1003 ¶ 147).

c. "the most proximal apices of the outer frame extends more proximally than a proximal end of the outer seal"

Petitioner argues that, as depicted in Figure 1 of Walther, the outer seal in its expanded configuration, extends roughly the same distance proximally as the most proximal apices. Pet. 51 (citing Ex. 1007, Fig. 1; Ex. 1003 ¶ 150). Petitioner argues that Walther's outer cloth does not cover the entire exterior of the SAPIEN valve, as illustrated by the uppermost row of cells, which are uncovered in Figure 1. *Id.* (citing Ex. 1007, Fig. 1). Rather, argues Petitioner, Walther's outer cloth is positioned to cover the area that will press against, and seal, the cardiac annulus and aortic valve leaflets. *Id.* (citing Ex. 1007, 1120, Ex. 1003 ¶ 150).

Petitioner notes that Walther teaches that its cloth-covered SAPIEN valves were positioned within the surgical valves such that the "bottom of

the frame of the cloth valve is 2 ± 2 mm below the bottom of the surgical valve." Pet. 51 (citing Ex. 1007, 1122). Therefore, argues Petitioner, those of skill in the art would have understood that the proximal 2 mm of Walther's cloth-covered SAPIEN valve would lie below the annulus and native leaflets when implanted in a patient's native valve. *Id.* at 51–52 (citing Ex. 1003 ¶ 150).

Petitioner contends that, because the proximal ends of the frame do not press against the annulus or native tissue, a person of ordinary skill in the art would have understood that they do not need to be covered by the outer cloth. *Id.* at 52 (citing Ex. 1003 ¶ 150). Petitioner asserts that a skilled artisan would have found it obvious to adjust the size and placement of the outer cloth so that the apices extend more proximally than the outer seal. *Id.* (citing Ex. 1003 ¶ 151). According to Petitioner, those of skill in the art were motivated to routinely adjust the size and shape of outer cloths to maximize sealing while minimizing the profile of the valve, as suggested by the variety of seals suggested by Spenser II. *Id.* (citing Ex. 1003 ¶ 151, Ex. 1011, Figs. 20a–22). Petitioner argues that Walther, Spenser II, and Levi reflect that skilled artisans knew how to attach different types and shapes of outer cloths to heart valves. *Id.* (citing e.g., Ex. 1007, Fig. 1; Ex. 1011, Fig. 22; Ex. 1008, Figs. 1, 42–43). Therefore, contends Petitioner, a person of ordinary skill in the art would have been motivated to position Walther's outer cloth so that the apices extend more proximally because such placement would reduce the amount of cloth material on the outside of the valve, minimizing the crimped profile. *Id.* (Ex. 1003 ¶ 151). Petitioner points out that Walther does not picture the valve in the crimped (i.e., compressed) configuration, but notes that the SAPIEN valve's frame elongates when crimped and shortens when expanded. Pet. 53 (Ex. 1003

¶ 152). Petitioner argues that, when the device is crimped and the vertical frame struts move towards each other, the ends of the frame move away from each other. *Id.* Therefore, argues Petitioner, those of skill in the art would have understood that even without modification, the proximal apices of Walther's outer frame may extend proximally further than the outer cloth when the valve is crimped. *Id.* And where the positioning of Walther's outer cloth is modified as proposed above, the proximal apices would continue to extend proximally further than the outer cloth when the valve is crimped. *Id.* at 53–54.

d. Analysis

Petitioner has not persuaded us that it has a reasonable likelihood of prevailing at trial on the issue of whether Walther teaches or suggests this limitation. Figure 2 of Walther, a portion of which is reproduced below, depicts the proximal (i.e., inflow) portion of the SAPIEN valve positioned in a Carpentier-Edwards Perimount ("CEP") bioprosthetic valve:

Detail of Figure 2 of Walther depicting the proximal end of the cloth-covered SAPIEN valve positioned in the Carpentier-Edwards Perimount (CEP) bioprosthetic valve

It is evident from this view of Walther's cloth-covered SAPIEN valve that the outer cloth entirely covers the apices of the metallic outer frame, which are not visible in this view, but which are covered by the outer cloth forming the outer seal. Nor is there any evidence in either Figure 1 or Figure 2 of Walther that the proximal apices of the outer frame of the outer frame extend more proximally than a proximal end of the outer seal, as required by claim 1.

Walther teaches merely that "an added poly(ethylene terephthalate) (PET) cloth was stitched onto the perimeter of each SAPIEN valve." Ex. 1007, 1121. Petitioner identifies no teaching or suggestion in Walther that the proximal apices of the valve are uncovered by the outer cloth. Petitioner's argument that the teachings of Walther demonstrate that skilled artisans knew how to attach different types and shapes of outer cloths to heart valves is not persuasive because Walther does not provide any teaching or suggestion to show that the proximal apices of the outer frame are either uncovered or extend proximally beyond the proximal edge of the outer seal. And, as we explain below, neither Spenser II or Levi teach or suggest these limitations. Petitioner argues further that the compressed valve would extend in length, causing the apices to extend proximally from the outer cloth. While the frame's elongation is a natural result of its geometry, how the apices move relative to the outer cloth is another question. Walther states only that the "cloth was stitched onto the perimeter of each SAPIEN valve." Ex. 1007, 1121. Petitioner has not shown that the stitching was

located such that frame elongation would cause the apices to extend proximally.

Petitioner argues additionally that "POSITAs were motivated to routinely adjust the size and shape of outer cloths to maximize sealing while minimizing the profile of the valve." Pet. 52. Even accepting that, however, does not provide an adequate motivation to modify Walther's valve in a way that would result in the claimed valve. Petitioner has not shown, for example, that the small reduction possible in the outer cloth (which protruded below the native valve no more than 2 mm) would have meaningfully minimized the Walther's valve profile. Accordingly, we determine that Petitioner has not adequately justified modifying Walther's valve such that the apices extend proximally beyond the outer cloth.

Having found that Walther, upon which Petitioner relies, neither teaches nor suggests the limitations at issue, we are consequently not persuaded that Petitioner has established a reasonable likelihood of success in prevailing at trial on Grounds 1 and 2.

3. Ground 3: Spenser and Spenser II

a. Overview of Spenser II (Ex. 1011)

Spenser II is a PCT Publication that published on Jan. 12, 2006. Ex. 1011, codes (10), (43). Spenser II facially qualifies as prior art under pre-AIA 35 U.S.C. §§ 102(b).

Spenser II is directed to "the prevention, detection, and repair of paravalvular leaks around cardiac valve prostheses." Ex. 1011 ¶ 1. Spenser II discloses that prosthetic valves may be implanted "either through open heart surgery or by use of newer percutaneous methods," but with "both methods paravalvular leaks are a known side effect." *Id.* ¶ 11. Spenser II

further notes that "[p]ercutaneous introduction of medical devices is a preferred surgical procedure" and "considered safer and less invasive." *Id.* ¶ 12.

Figure 22 of Spenser II is reproduced below:

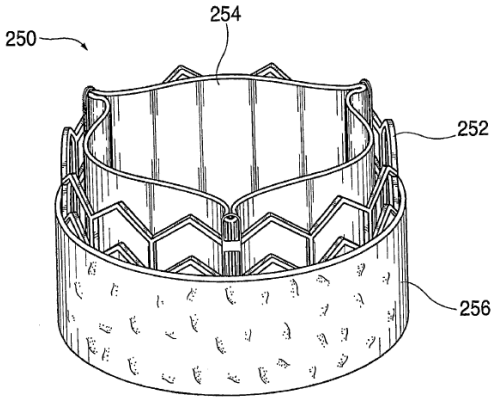

FIG. 22

Figure 22 illustrates a valve device, in accordance with a preferred embodiment

Spenser II's Figure 22 embodiment, as shown above, includes a layer of compressible material, such as a cloth material, along an exterior surface of a stented valve. Ex. 1011 ¶ 85.

Specifically, Figure 22 illustrates a stented valve 250 including a circular stent structure 252 surrounding a valvular structure 254. Ex. 1011 ¶ 144. "[S]tent structure 252 is preferably made of a deformable material, such as stainless steel, adapted for radial expansion using a balloon catheter. The valvular structure 254 forms three leaflets and is illustrated in the open configuration." *Id.* ¶ 144. The device further includes circular layer of compressible material 256 surrounding the outside of stent structure 252. *Id.* at ¶ 145. "The material may extend partially around the stent structure or may extend entirely around the stent structure, such as in the form of a sleeve," and may be formed of PET. *Id.* "[T]he compressible material 256 may resemble a cloth or fabric having small fibers extending from the

surface of the material." *Id.* This "compressible material expands after deployment at a treatment site" and "fills the gaps between the stented valve and the surrounding tissue," which "creates a mechanical seal that prevents paravalvular leakage." *Id.* "In one preferred embodiment, the compressible material is formed of polyethylene terephthalate (PET) and has a thickness ranging from about 1 to 5 mm." *Id.*

b. "the apices of the outer frame that are most proximal are uncovered by the outer seal and the graft covering"

Petitioner argues that Spenser II discloses a "compressible material 256 [ ] disposed along an outer surface of stent structure 254." Pet. 85 (quoting Ex. 1011 ¶ 145, Ex. 1003 ¶ 222)). Petitioner acknowledges that Spenser II does not disclose that the compressible material extends over the proximal apices and argues that such an interpretation would be inconsistent with the description that the material is disposed along an outer surface. *Id.* (citing Fig. 22; Ex. 1003 ¶ 222). Petitioner points to Figure 22 of Spenser II:

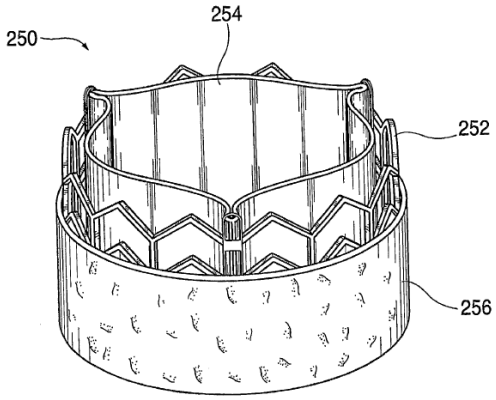

FIG. 22

<u>Figure 22 of Spenser illustrates a valve device, in accordance with a preferred embodiment</u>

Petitioner argues that, if Spenser II's compressible material were disposed along an outer surface of the outer frame of Spenser's Figure 44a,

the material would not cover the ends of the most proximal apices. Pet. 86 (citing Ex. 1003 ¶ 222). Figure 44a of Spenser is reproduced below:

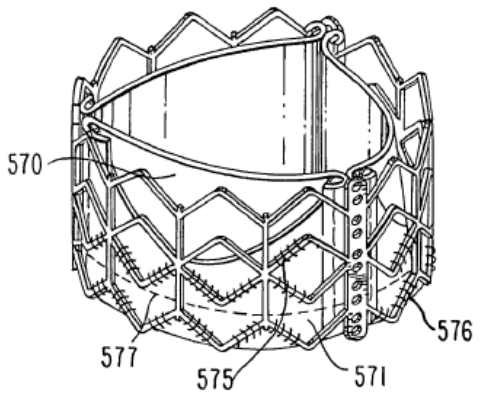

Figure 44a of Spenser is a perspective view of a prosthetic heart valve without an external cover or fibers on the exterior surface of the outer frame.

c. "the most proximal apices of the outer frame extends more proximally than a proximal end of the outer seal"

Petitioner argues that Spenser II's compressible material is "disposed along the outer surface of the stent structure 252." (Ex. 1011 ¶ 145). Petitioner argues that a person of ordinary skill in the art would have found it obvious to adjust the size and placement of the compressible material such that the most proximal apices of Spenser's Figure 44a's outer frame extend proximally further than the compressible for the same reasons explained in Grounds 1 and 2 with respect to Walther's outer cloth. *Id.*

d. Analysis

We are not persuaded by Petitioner that it has established a reasonable likelihood of prevailing at trial. Spenser teaches:

> In accordance with yet another preferred embodiment, a stented valve is provided wherein a compressible material, such as a clot or fabric, extends around an exterior portion of the stent. The

> compressible material may be formed of polyethylene terephthalate (PET) and is configured to expand into the gaps. Furthermore, fibers on the material may be configured to encourage coagulation of blood to further fills the gaps and prevent leakage.

Ex. 1011 ¶ 55.

More specifically, with respect to Figure 22, Spenser II states that:

> To reduce or prevent paravalvular leakage, a layer of compressible material 256 is disposed along an outer surface of the stent structure 252. The material may extend partially around the stent structure or may extend entirely around the stent structure, such as in the form of a sleeve. In one preferred embodiment, the compressible material is formed of polyethylene terephthalate (PET) and has a thickness ranging from about 1 to 5 mm. In certain configurations, the compressible material 256 may resemble a cloth or fabric having small fibers extending from the surface of the material. In various embodiments, the fibers may be straight, curved or hook-shaped. The compressible material expands after deployment at a treatment site. As the compressible material expands, it fills the gaps between the stented valve and the surrounding tissue. Accordingly, the compressible material creates a mechanical seal that prevents paravalvular leakage. In addition, the compressible material, and especially the fibers, may be adapted to encourage coagulation of blood to further fill the gaps and prevent leakage. In an alternative configuration, a tissue growth factor may be applied to the compressible material for promoting the growth of tissue into the material, thereby further sealing the gaps. Any suitable tissue growth factor may be used. In various preferred methods, the growth factor may be applied along the outer surface of the compressible material or the material may be soaked or dipped in the growth factor before use.

Ex. 1007 ¶ 145. These passages, and Figure 22, are the only descriptions in Spenser II of the "outer seal" of the cardiac valve.

Neither Figure 22 or the claims or Specification of Spenser II provide any support for Petitioner's content that Spenser II teaches or suggests that

the proximal apices of the outer frame" are uncovered by the outer seal and the graft covering" or "extend[] more proximally than a proximal end of the outer seal." There is no teaching or suggestion in Spenser II that the "outer surface" of the valve does not include the end of proximal apices, nor is there any express teaching or suggestion that the proximal apices extend beyond the proximal portion of the outer seal. Indeed, Figure 22 of Spenser II appears to depict the proximal edge of the outer seal extending to the proximal edge of the outer frame. Petitioner's arguments in this respect are speculative and without evidentiary support and are, consequently, attorney argument and not persuasive. *De Blauwe*, 736 F.2d 699, 705. Petitioner's argument that the outer covering of compressible material would not cover the proximal apices of the outer frame of Spenser's Figure 44a, or that the proximal apices of the outer frame of Figure 44a would extend proximally beyond the proximal end of the compressible material are similarly speculative.

We are consequently not persuaded that Petitioner has established a reasonable likelihood of success in prevailing at trial on Ground 3.

4. Grounds 4 and 5: Levi and Walther or Spenser II

a. Overview of Levi (Ex. 1008)

Levi is a U.S. Patent that issued on July 19, 2016, from an application filed on October 5, 2011. Ex. 1008, codes (10), (22), (45). Thus, on its face, Levi qualifies as prior art under pre-AIA 35 U.S.C. § 102(e).[7]

[7] Because the '735 patent claims the priority benefit of the '896 application, which was filed on Dec. 6, 2012, prior to enactment of the AIA, we apply the pre-AIA rules concerning prior art.

Levi is directed to a prosthetic heart valve. Ex. 1008, col. 1, ll. 16–18. Figure 11 of Levi is reproduced below:

FIG. 11

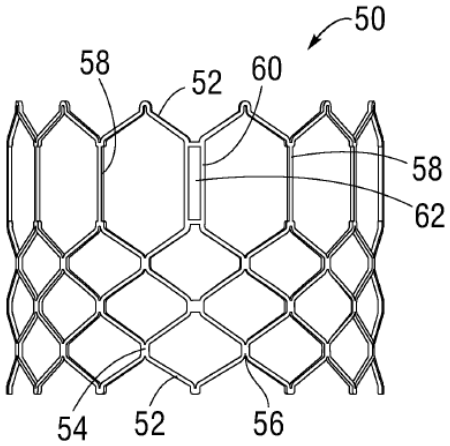

Levi's Figure 11 depicts a frame for use in a prosthetic heart valve.

Specifically, Figure 11 illustrates frame 50 that:

> comprises multiple rows of circumferentially extending, angled struts **52** that are connected to each other at nodes, or connecting portions, **54** and **56**. The uppermost row of struts 52 are connected to an adjacent row of struts by a plurality of axially extending struts **58** and commissure window frame portions 60. Each commissure frame portion 60 defines a slot, or commissure window, **62** for mounting a respective commissure of the valvular structure ….

Id. at cols. 8–9, ll. 61–3.

Figure 2 of Levi is reproduced below:

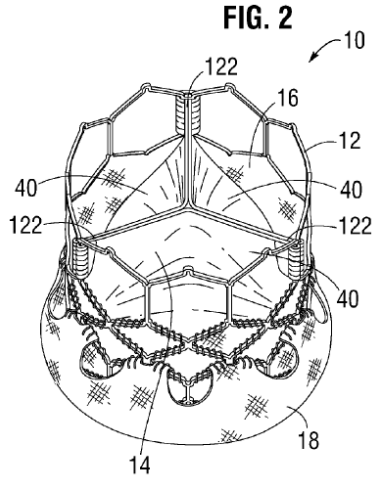

Figure 2 of Levi depicts an exemplary embodiment of a prosthetic heart valve

Figure 2 depicts a prosthetic heart valve 10 including valvular structure 16, surrounded by circular stent or frame 12. Ex. 1008 col. 5, ll. 52–58, Fig. 2. The bottom portion of frame 12 is covered by inner skirt 16 on the inside of frame 12 and outer skirt 18 on the outside of frame 12. *See id.* at col. 5, ll. 52–58, col. 9, ll. 24–25, col. 13, ll. 49–50, Fig. 2. Valvular structure 16 includes "three leaflets **40**, collectively forming a leaflet structure, which can be arranged to collapse in a tricuspid arrangement." *Id.* at Fig. 2, col. 5, ll. 59–61. "[L]eaflets **40** [are] secured to one another at their adjacent sides to form commissures **122** of the leaflet structures." *Id.* at col. 11, ll. 35–37.

Figure 20 of Levi is reproduced below:

FIG. 20

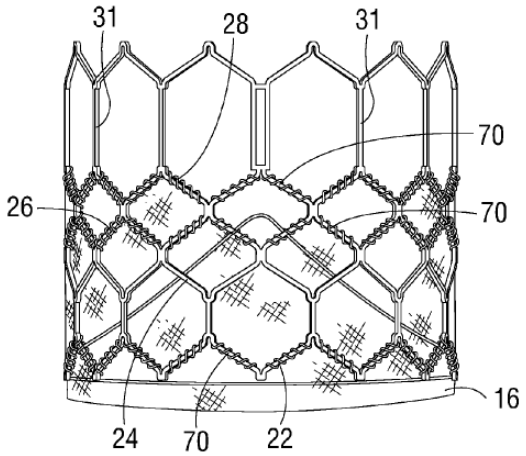

Figure 20 of Levi depicts the assembly of the inner skirt and frame of a prosthetic heart valve

Figure 20 depicts a valve with skirt 16 arranged on frame 12. Ex. 1008 col. 10, ll. 5–17, at Fig. 20. Specifically, frame 12 includes struts 22, 24, 26, and 28. *Id.* at col. 7, ll. 16–21, Fig. 20. "[S]econd, third, and fourth rows of struts 24, 26, and 28 define two intermediate rows of cells defining openings 38. The fourth and fifth rows of struts 28 and 32, along with frame portions 30 and 31, define an upper row of cells defining openings 40." *Id.* at col. 7, ll. 19–23, Fig. 20. "[T]he upper edge of skirt **16** can be tightly secured to struts **28** with sutures **70**." *Id.* at col. 10, ll. 16–18, Fig. 20. "[S]kirt **16** can also be secured to the first, second, and third rows of struts **22**, **24**, and **26**, respectively, with sutures **70**." *Id.* at col. 10, ll. 28–30. Figure 42 of Levi is reproduced below:

FIG. 42

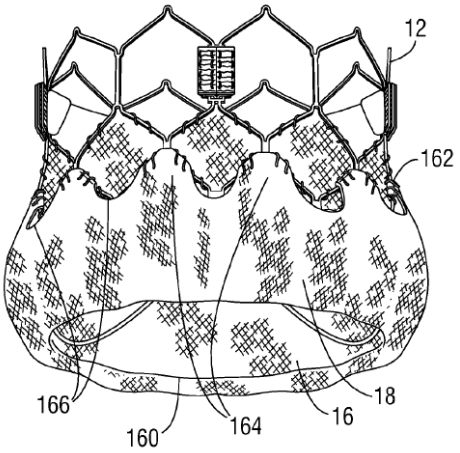

Figure 42 of Levi depicts aspects of an exemplary embodiment of a prosthetic heart valve

Figure 42 illustrates portions of the valve assembly including an outer skirt 18 with projections 164 that are sutured to the outer side of frame 12. *Id.* at Fig. 42, col. 13, ll. 54–61. Skirt 18 includes lower edge 160 that can be sutured to the lower edge of inner skirt 16 at the inflow end of the valve. *Id.* Outer skirt 12 includes excess material between the lower and upper edges. *Id.* at Figs. 2, 43, col. 13, ll. 62–66. Levi discloses that when

> valve **10** is deployed within the body the excess material of the outer skirt **18** can fill in gaps between the frame **12** and the surrounding native annulus to assist in forming a good fluid-tight seal between the valve and the native annulus. The outer skirt **18** therefore cooperates with the inner skirt **16** to avoid perivalvular leakage after implantation of the valve **10**.

Id. at col. 14, ll. 4–9.

b. "the apices of the outer frame that are most proximal are uncovered by the outer seal and the graft covering"

Petitioner points to Figure 20 of Levi, and argues that Levi's inner skirt extends beyond, but does not expressly cover, the most proximal apices of the frame. Pet. 109–110. Figure 20 of Levi is reproduced below:

FIG. 20

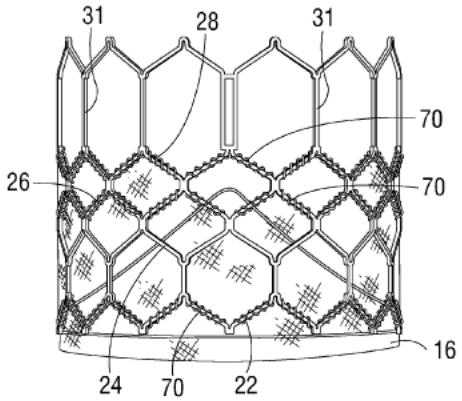

Figure 20 of Levi depicts the assembly of the inner skirt within the outer frame

Petitioner relies on Walther and Spenser II presented above, arguing that it would have been obvious to a person of ordinary skill in the art to substitute the outer skirt of Walther or the compressible material of Spenser II for Levi's outer skirt. Pet. 110–111, 99.

c. "the most proximal apices of the outer frame extends more proximally than a proximal end of the outer seal"

Petitioner argues that those of skill in the art would have found it obvious to adjust the size and placement of Walther's outer cloth or Spenser II's compressible material such that the most proximal apices of Levi's outer frame extend proximally further than the outer cloth for the same reasons explained in the previous section and Grounds 1–3. Pet. 111.

d. Analysis

We are not persuaded by Petitioner that it has established a reasonable likelihood of prevailing at trial. Petitioner's argument that Levi depicts the inner skirt extending beyond the proximal apices of the outer frame is irrelevant to this issue, because claim 1 requires the proximal apices to not

be covered by, and extend beyond, the outer seal of the frame. Ex. 1001, col. 22, ll. 6–11.

We have found in the related *inter partes* reviews that the outer skirt of Levi does not constitute the outer seal of the claims, because it is composed of woven PET fabric and not of radially or outwardly extending fibers, as required by the claims. *See, e.g.*, IPR2022-00034, *Edwards Lifesciences Corp. v. Aortic Innovations, LLC*, Paper 14, 26–27. We adopt that same reasoning here.

Nevertheless, even were we to accept the premise that Levi's outer skirt constitutes an "outer seal," Levi expressly teaches that the bottom portion of frame 12 is covered by inner skirt 16 on the inside of frame 12 and outer skirt 18 on the outside of frame 12. Ex. 1008 col. 5, ll. 52–58, col. 9, ll. 24–25, col. 13, ll. 49–50, Fig. 2. Furthermore, Figure 42 of Levi, reproduced above, depicts the outer skirt extending downward to cover and extend beyond the proximal apices of the outer frame. We are not persuaded that a person of ordinary skill in the art, substituting the outer cloth of Walther or the compressible material of Spenser II for the outer skirt of Levi, to act as an outer seal, would have been motivated by the combined teachings of the references to leave uncovered the proximal apices of the outer frame uncovered, or to extend proximally, beyond the end of the outer seal. Indeed, the teachings of Levi with respect to its outer skirt enveloping the proximal apices of the outer frame would more likely encourage a skilled artisan to similarly cover the apices with the outer seal or either Walther or Spenser II.

We have explained above why we are not persuaded that either Walther or Spenser II teach or suggest the disputed limitations. We are

consequently not persuaded that Petitioner has established a reasonable likelihood of success in prevailing at trial on Ground 3.

D. Grounds 1–7: dependent claims 2–9, 11, and 12

Dependent claims 2–9, 11 and 12 all depend from independent claim 1. Because we find that Petitioner has not demonstrated a reasonable likelihood of success of prevailing at trial with respect to claim 1, we similarly find that, for the same reasons, Petitioner would be unlikely to prevail at trial with respect to the dependent claims under Grounds 1–7.

IV. CONCLUSION

For the forgoing reasons, Petitioner has failed to demonstrated a reasonable likelihood that at least one challenged claim of the ’735 patent would have been obvious over the prior art of record. Accordingly, we do not institute *inter partes* review of all claims and all grounds set forth in the Petition.

V. ORDER

In consideration of the foregoing, it is hereby:

ORDERED that, pursuant to 35 U.S.C. § 314 and 37 C.F.R. § 42.4, *inter partes* review of the ’735 is not instituted.

For PETITIONER:

Craig Summers
Joshua Stowell
Brian Barnes
KNOBBE, MARTENS, OLSON & BEAR LLP
2css@knobbe.com
2jys@knobbe.com
brian.barnes@knobbe.com

For PATENT OWNER:

Kenneth Weatherwax
Patrick Maloney
Vinson Lin
Nathan Lowenstein
LOWENSTEIN & WEATHERWAX LLP
weatherwax@lowensteinweatherwax.com
maloney@lowensteinweatherwax.com
lin@lowensteinweatherwax.com
lowenstein@lowensteinweatherwax.com

From: PTABE2E_System@USPTO.GOV <PTABE2E_System@USPTO.GOV>
Sent: Tuesday, September 6, 2022 10:45 AM
To: 2css <2css@knobbe.com>; 2Jys <2Jys@knobbe.com>; weatherwax@lowensteinweatherwax.com
Cc: Brian Barnes <Brian.Barnes@knobbe.com>; lin@lowensteinweatherwax.com; maloney@lowensteinweatherwax.com
Subject: IPR2022-00549: Institution Decision - Edwards Lifesciences Corp. v. Aortic Innovations LLC

UNITED STATES PATENT AND TRADEMARK OFFICE
PATENT TRIAL AND APPEAL BOARD

Institution Decision Notice

AIA Review No.: IPR2022-00549
Petitioner: Edwards Lifesciences Corp.
Patent Owner: Aortic Innovations LLC of Hillsboro Beach, FL
Patent No.: 11129735
Decision Date: 09/06/2022
Submitted By: PTAB, Trials@uspto.gov

A decision whether to institute a trial has been entered in the above case.

Questions regarding this receipt should be directed to the Patent Trial and Appeal Board at 571-272-7822 or e-mail to Trials@uspto.gov.

This e-mail is computer-generated. Do not reply to this e-mail because the e-mail box is not monitored.