US 20060004442A1

(19) United States

(12) Patent Application Publication

(10) Pub. No.: US 2006/0004442 A1

(43) Pub. Date: Jan. 5, 2006

Spenser et al.

(54) PARAVALVULAR LEAK DETECTION, SEALING, AND PREVENTION

(76) Inventors: **Benjamin Spenser**, Caesarea (IL); **Netanel Benichou**, Hof-Carmel (IL); **Assaf Bash**, Givat Ada (IL)

Correspondence Address:
EDWARDS LIFESCIENCES CORPORATION
LEGAL DEPARTMENT
ONE EDWARDS WAY
IRVINE, CA 92614 (US)

(21) Appl. No.: 10/883,575

(22) Filed: Jun. 30, 2004

Publication Classification

(51) Int. Cl.
*A61F 2/24* (2006.01)
*A61F 2/06* (2006.01)

(52) U.S. Cl. ..... **623/2.11**; 623/1.21; 623/1.24; 623/1.36; 623/2.38; 606/195

(57) ABSTRACT

The present invention provides a series of new percutaneous concepts of paravalvular repairs including identifying the leak location, several repair techniques and finally built-in means for leak prevention, built on percutaneous valves. A catheter-delivered device locates cavities occurring between a prosthetic valve and the wall of the body vessel where the valve is implanted, the cavities producing paravalvular leaks during diastole, the device comprising at least one of a plurality of flexible wires, the wire having attached to it a balloon, wherein the balloon is pulled by the leak through the cavity and wherein the wire then serves to mark the cavity location.

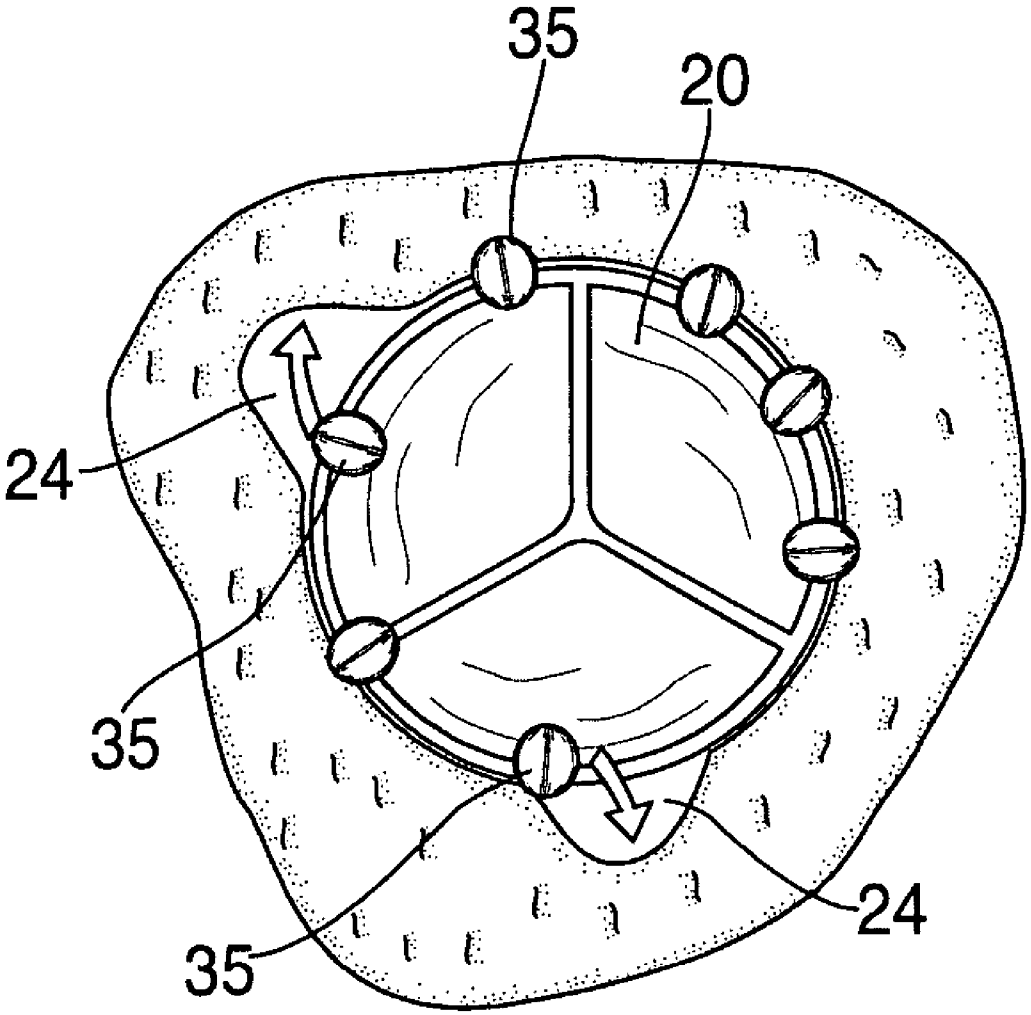

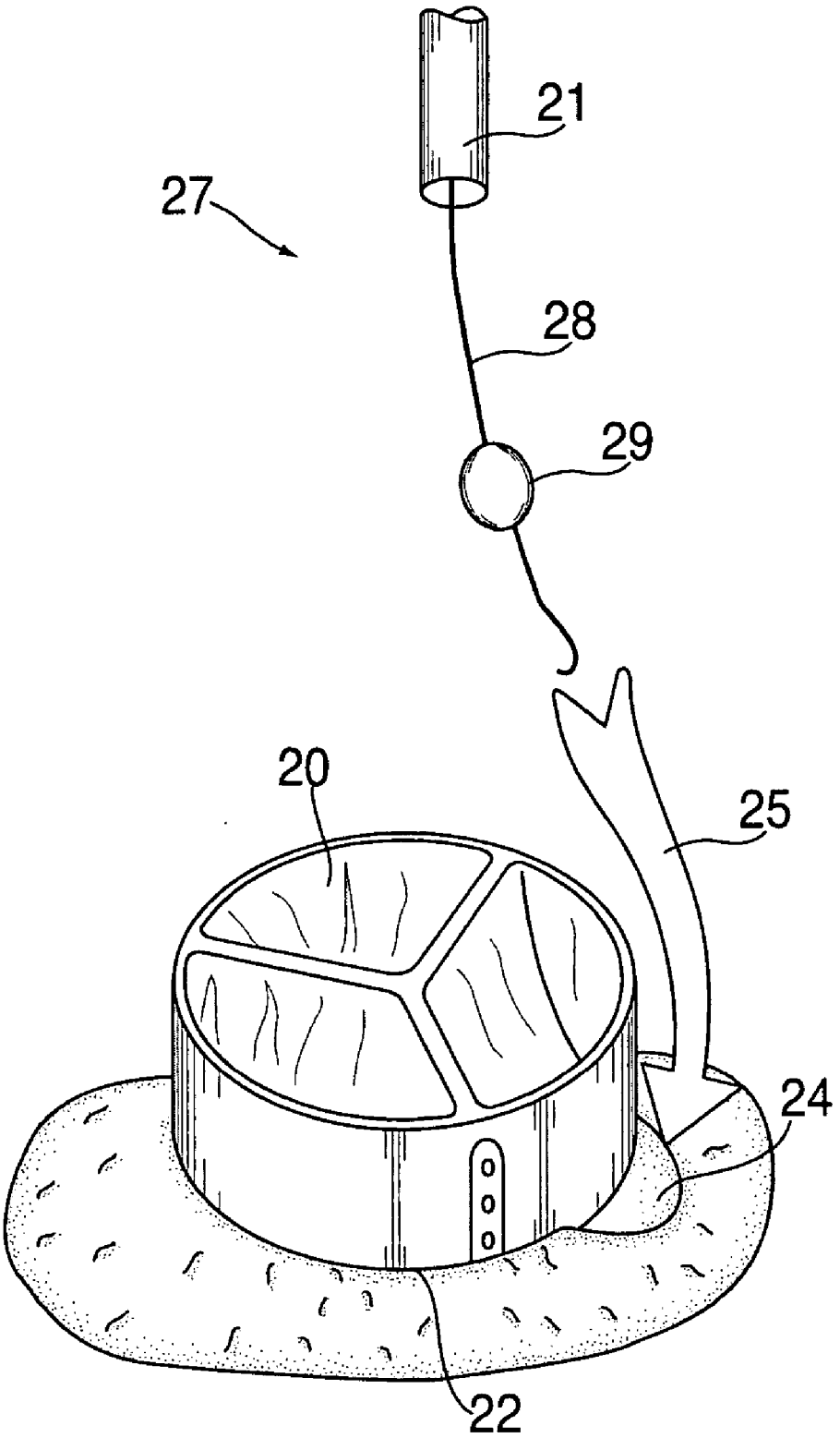


FIG. 1

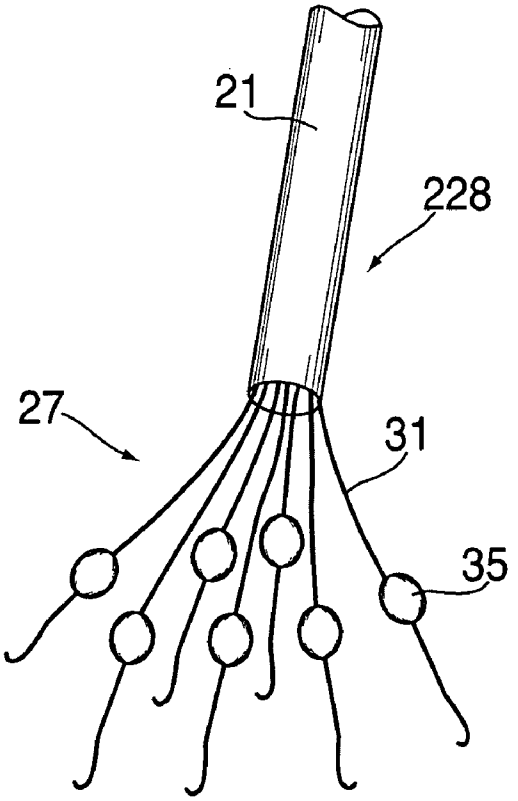


FIG. 2a

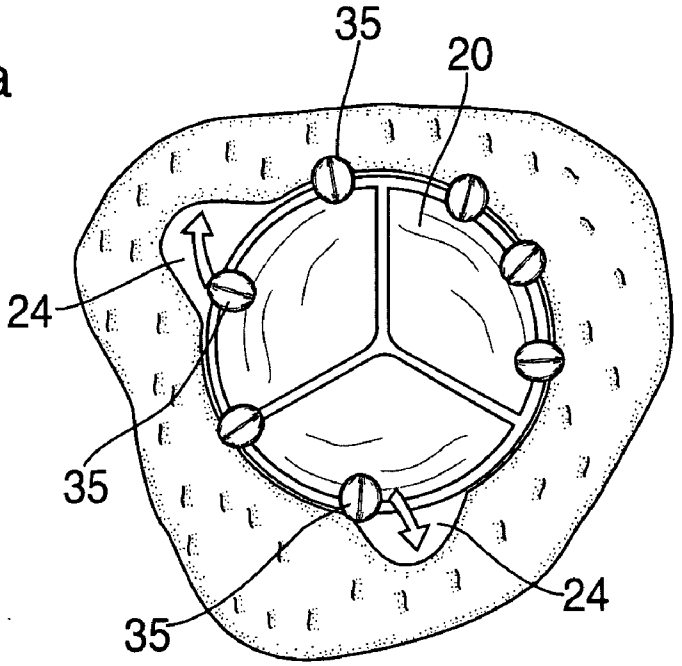


FIG. 2b

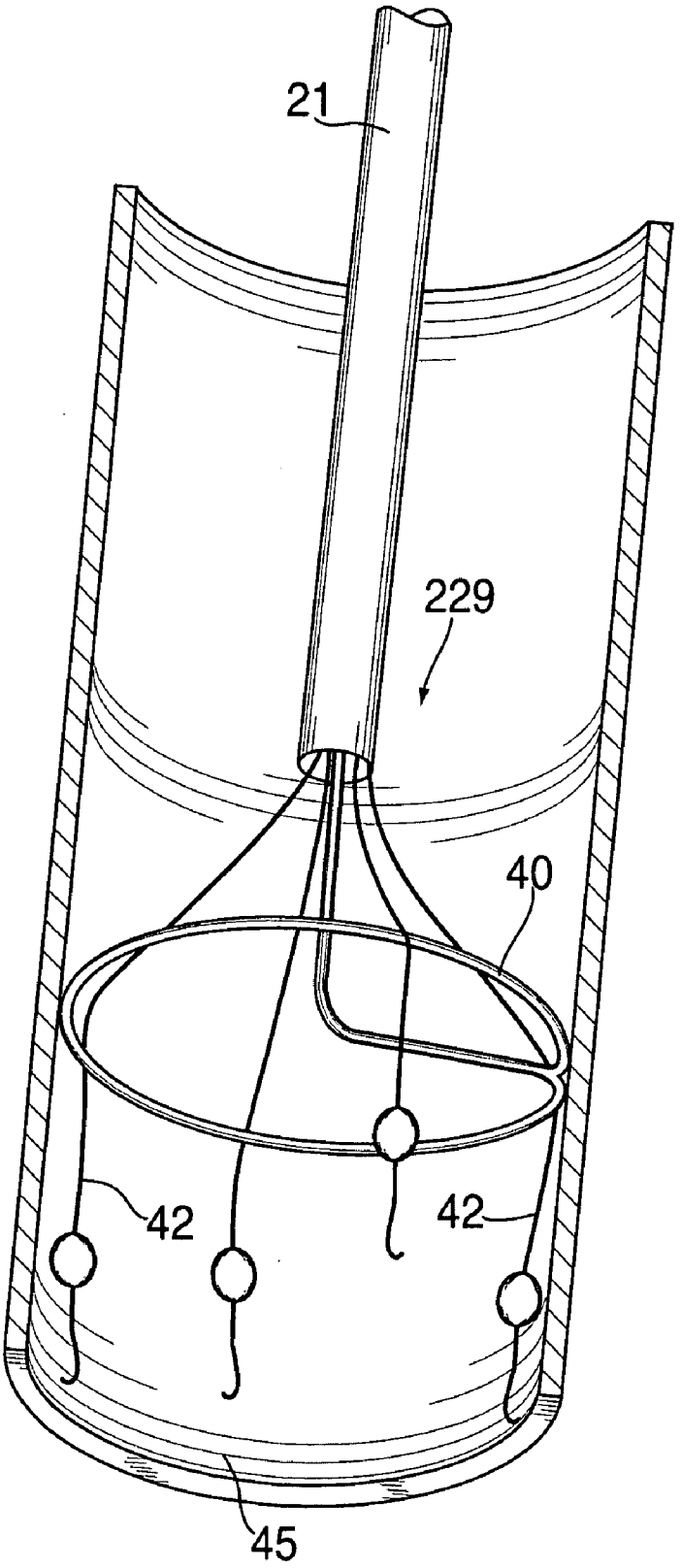


FIG. 3

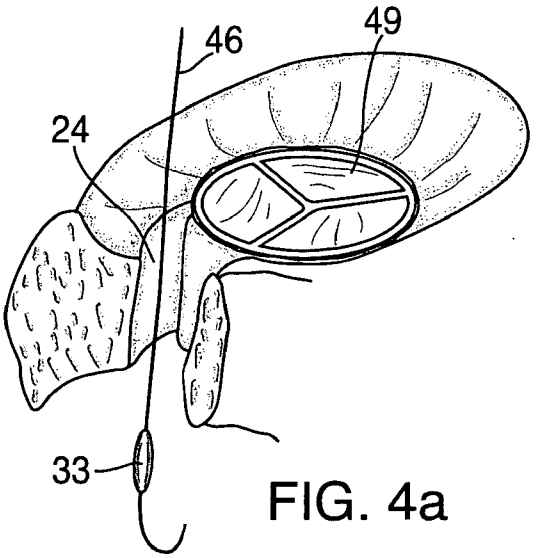


FIG. 4a

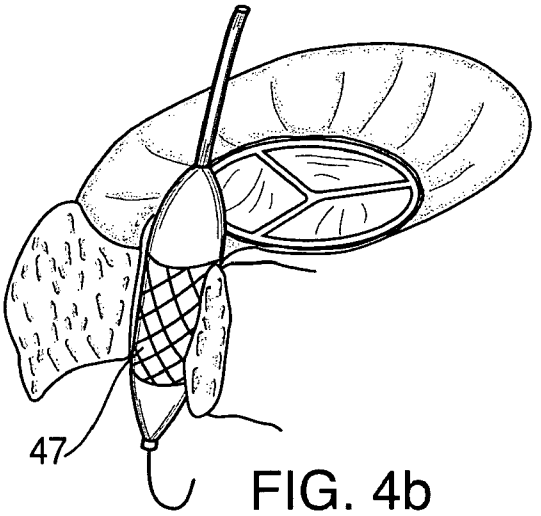


FIG. 4b

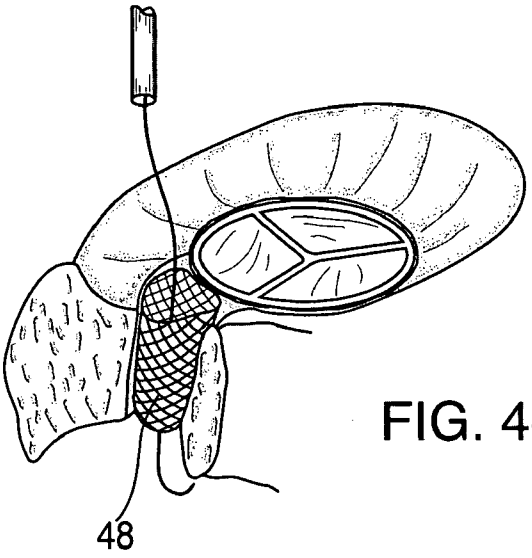


FIG. 4c

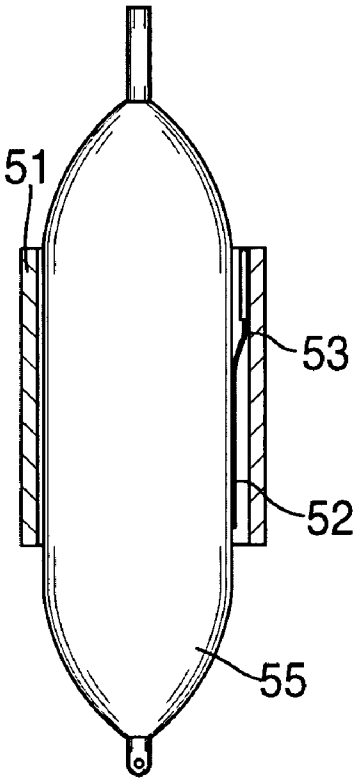


FIG. 5a

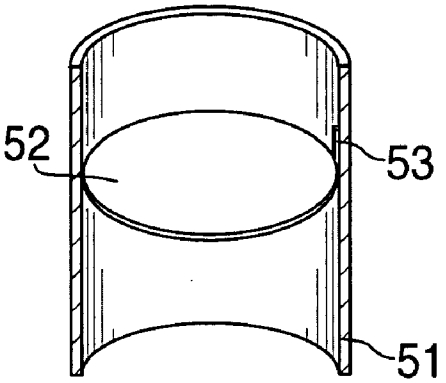


FIG. 5b

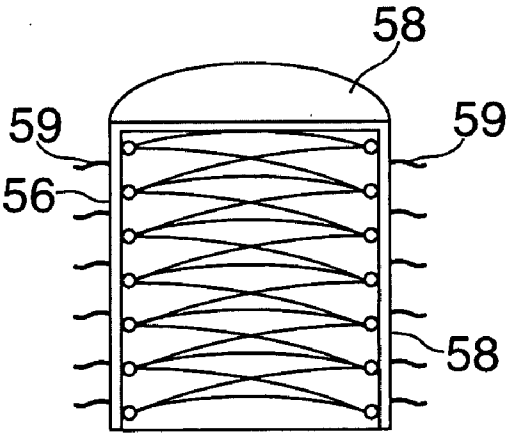


FIG. 5c

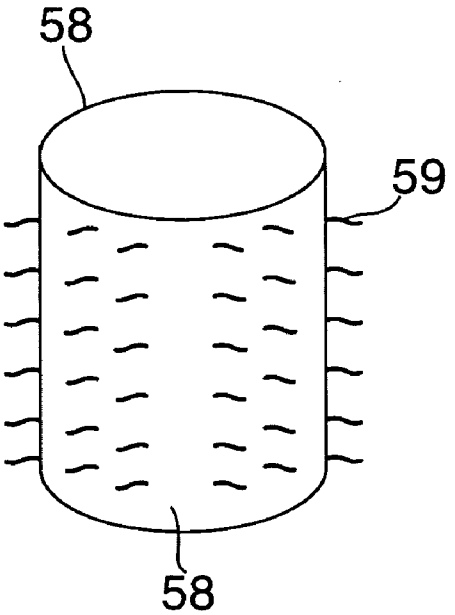


FIG. 5d

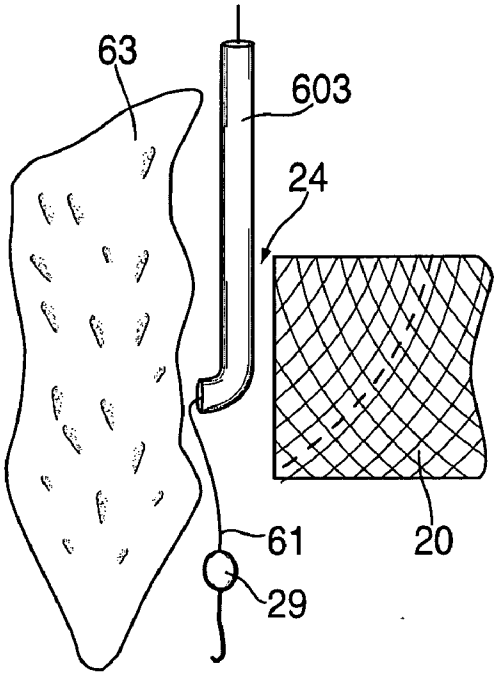


FIG. 6a

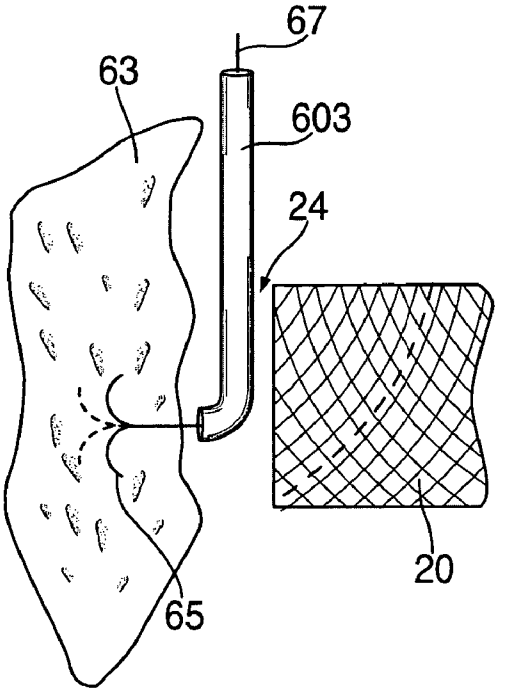


FIG. 6b

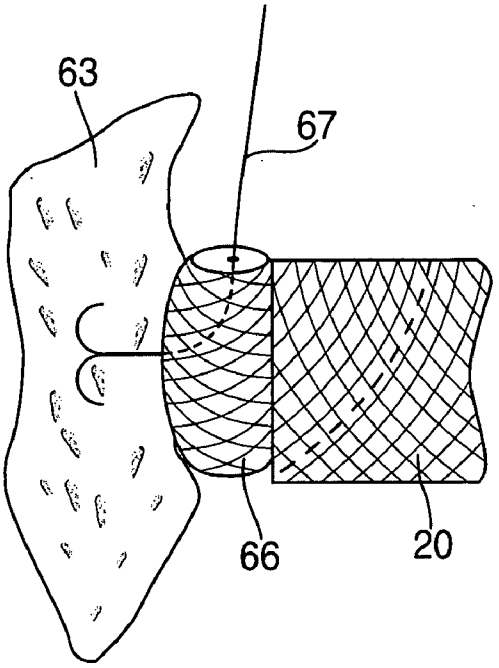


FIG. 6c

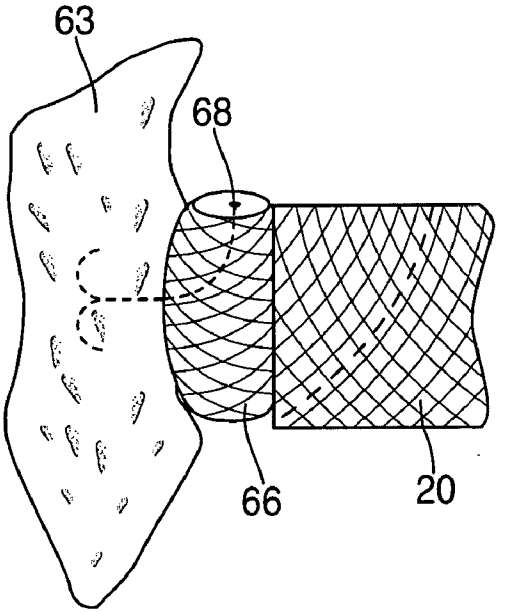


FIG. 6d

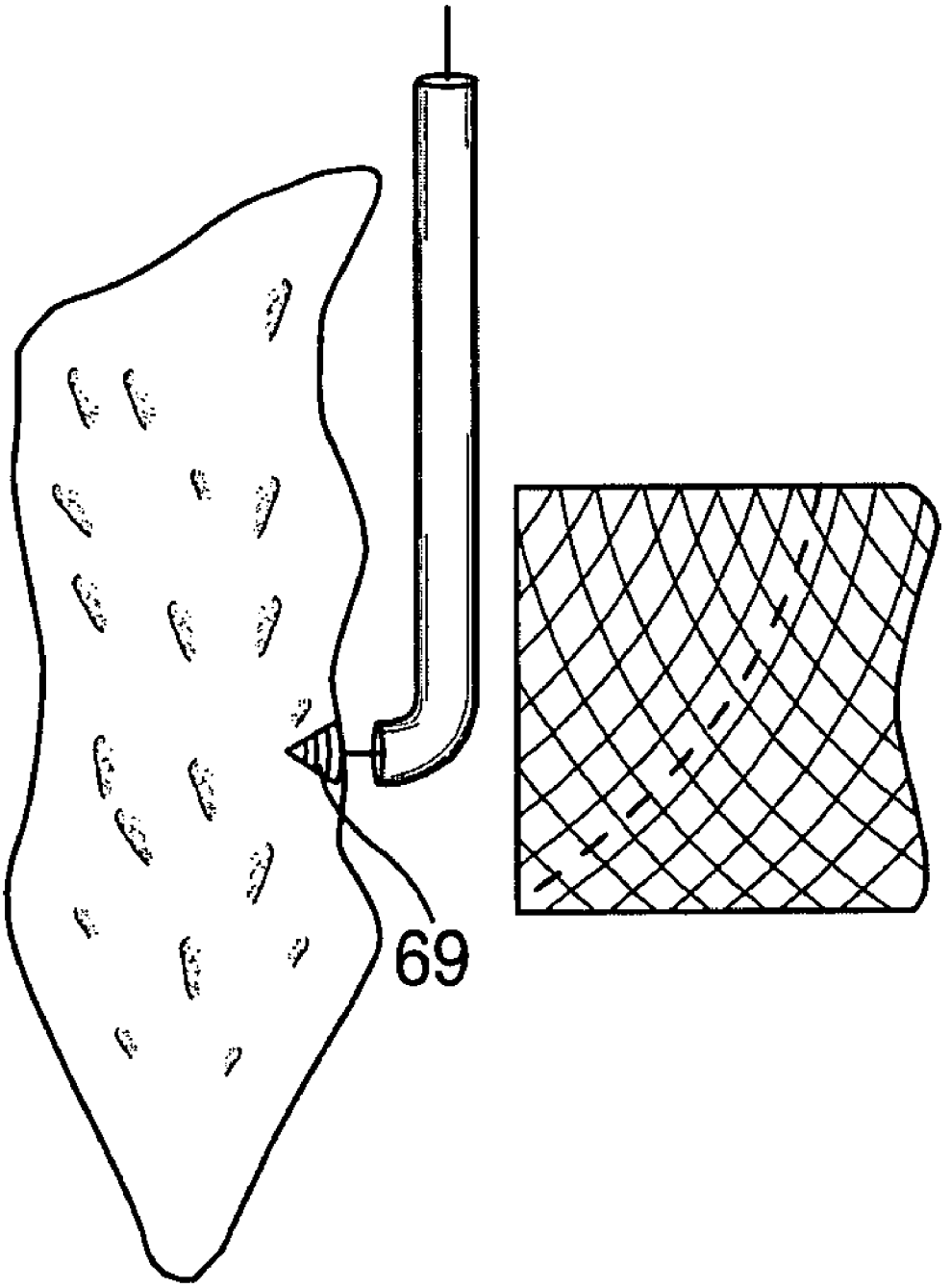


FIG. 7

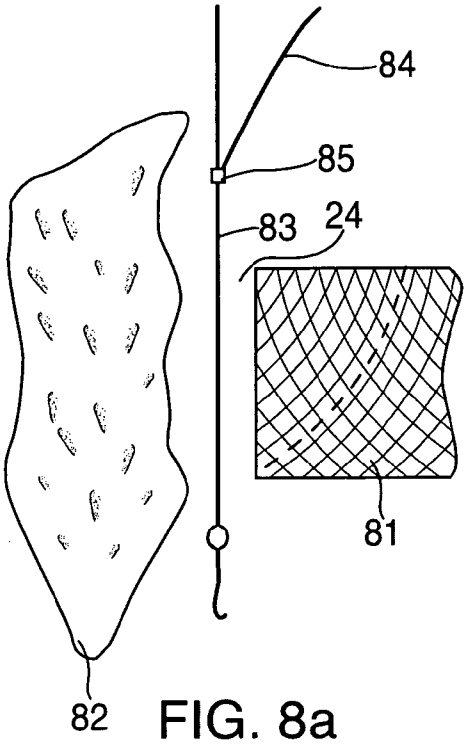


FIG. 8a

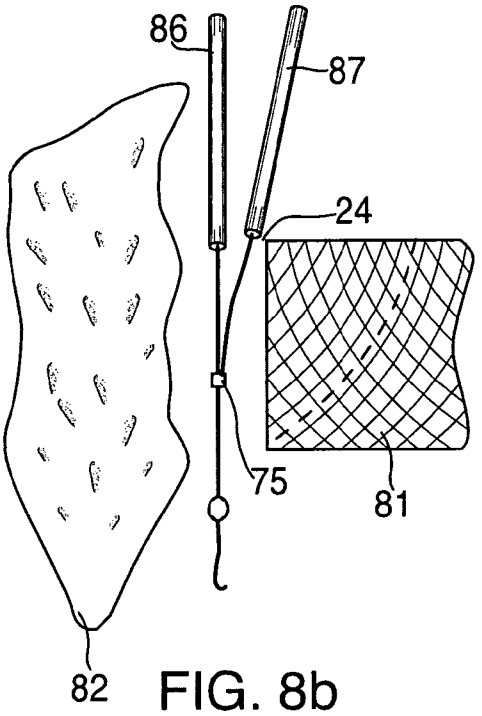


FIG. 8b

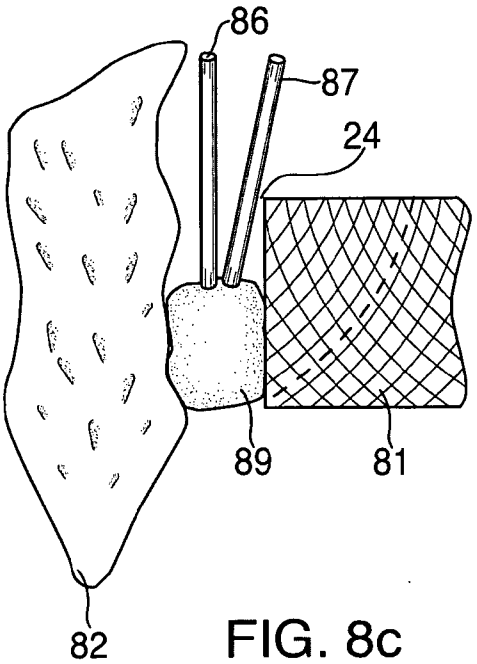


FIG. 8c

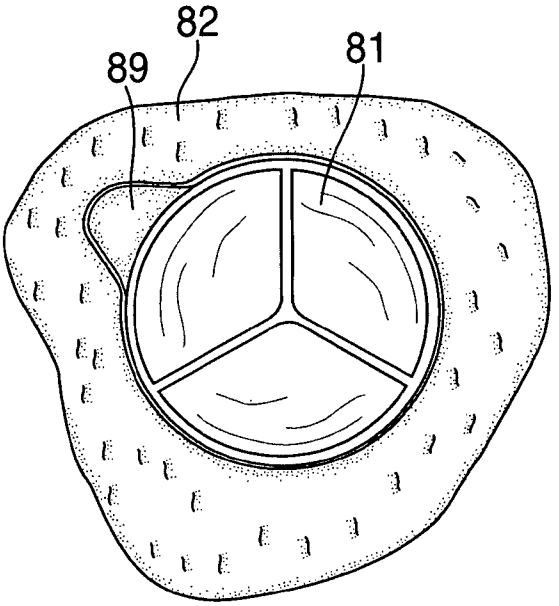


FIG. 8d

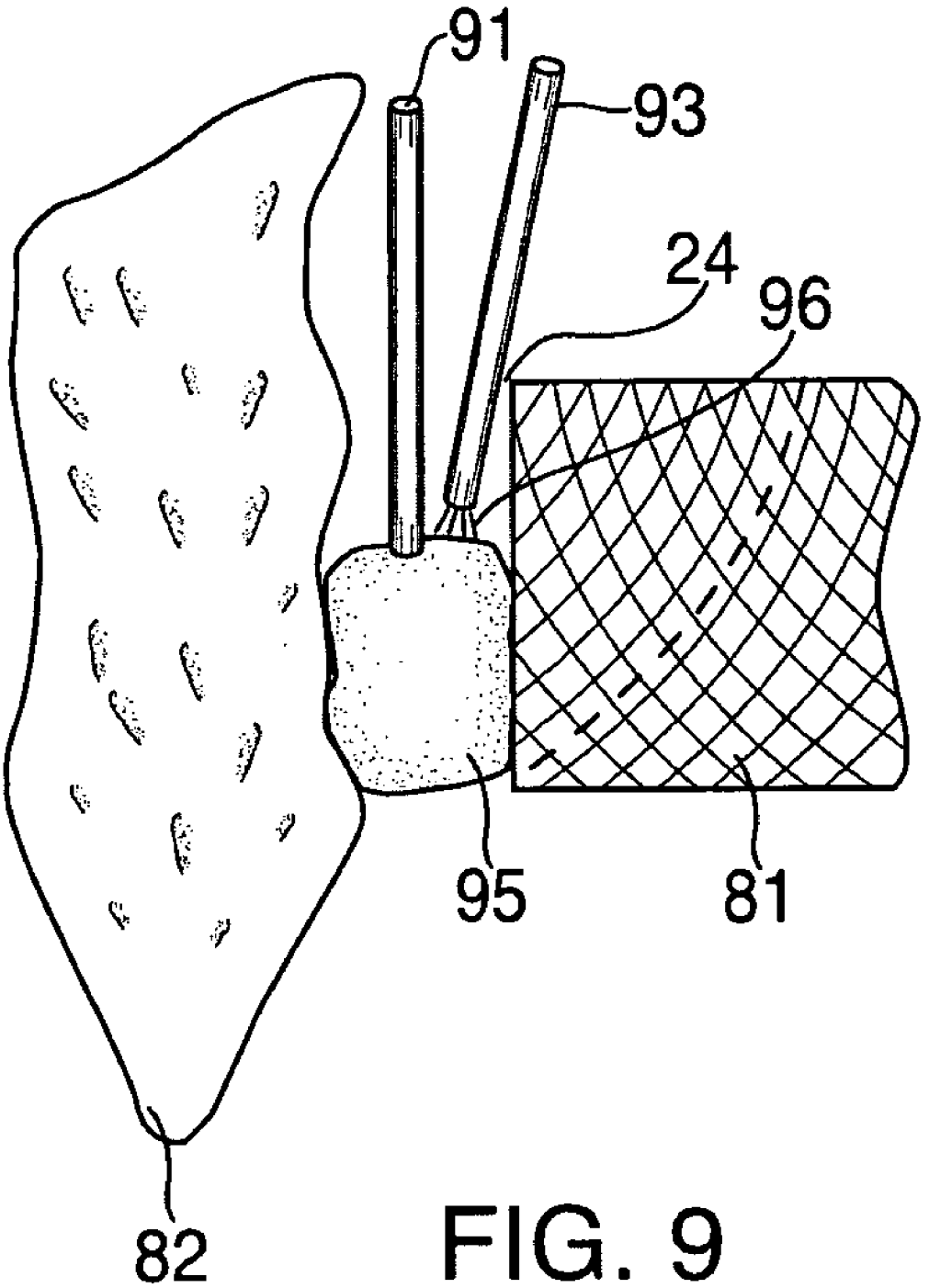


FIG. 9

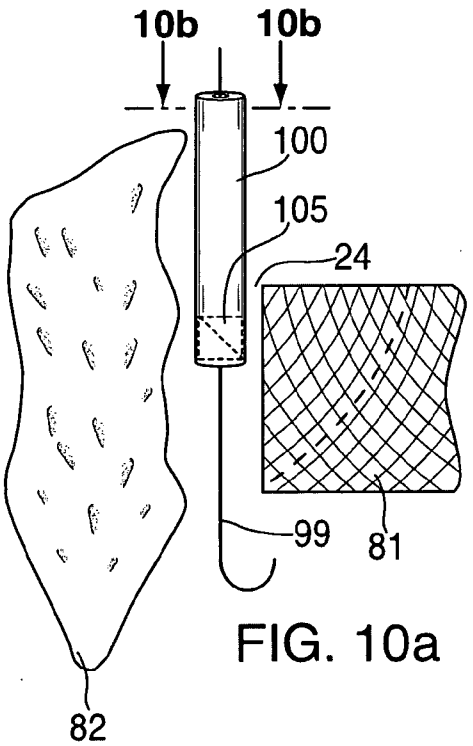


FIG. 10a

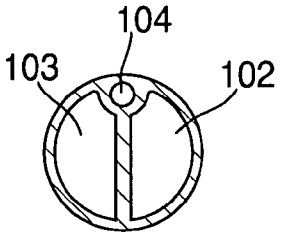


FIG. 10b

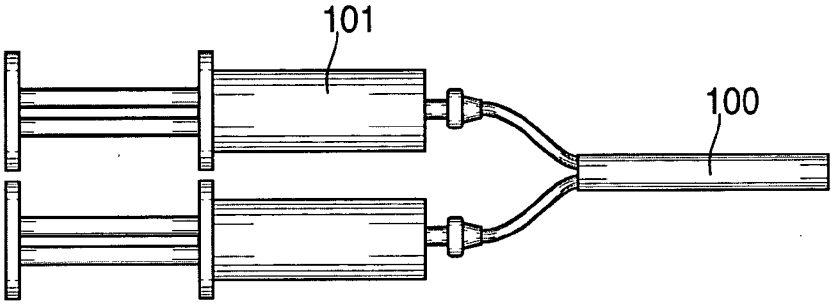


FIG. 10c

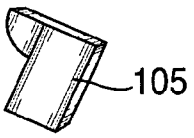


FIG. 10d

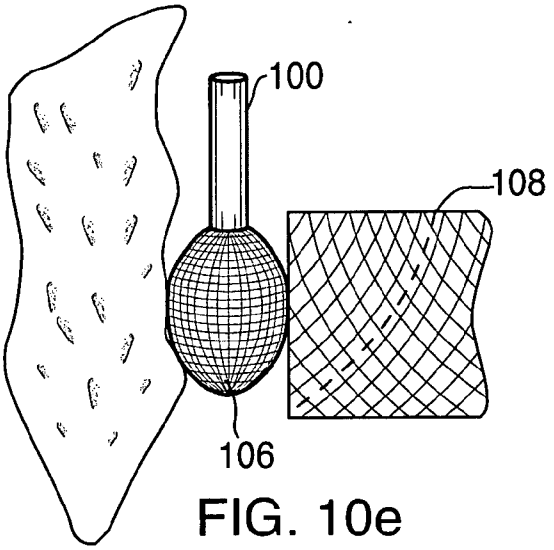


FIG. 10e

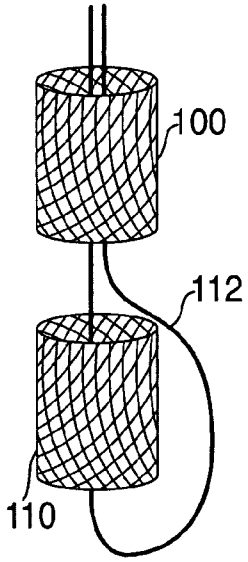


FIG. 11a

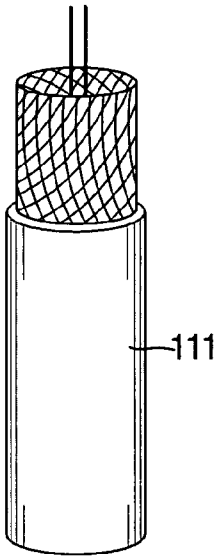


FIG. 11b

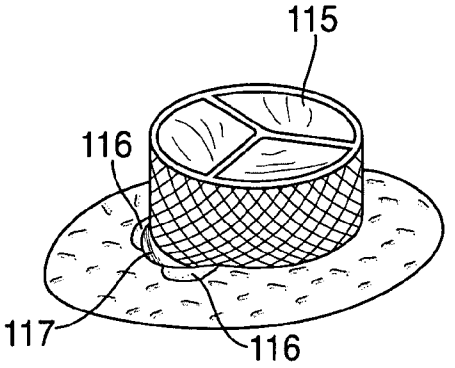


FIG. 11c

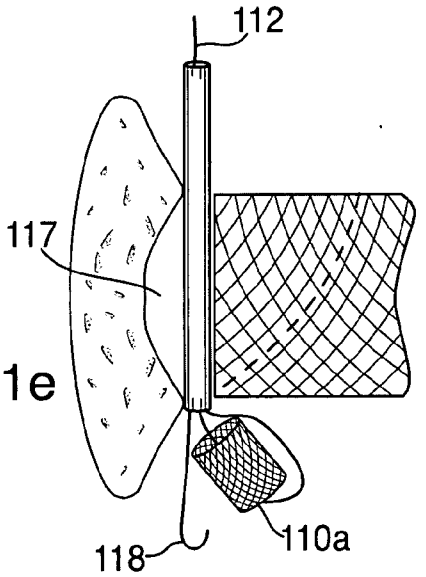


FIG. 11e

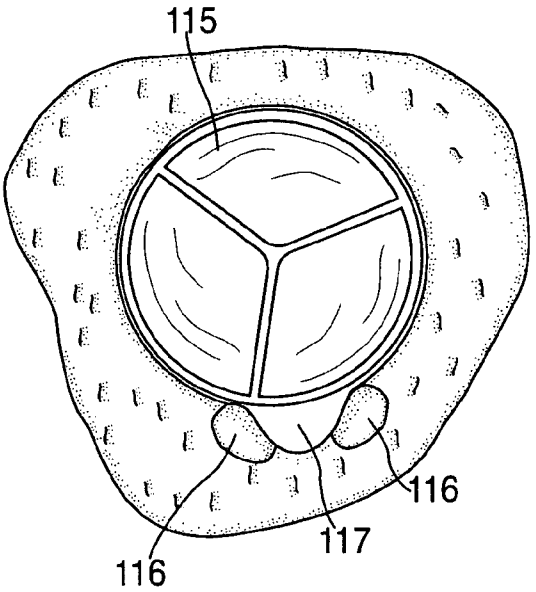


FIG. 11d

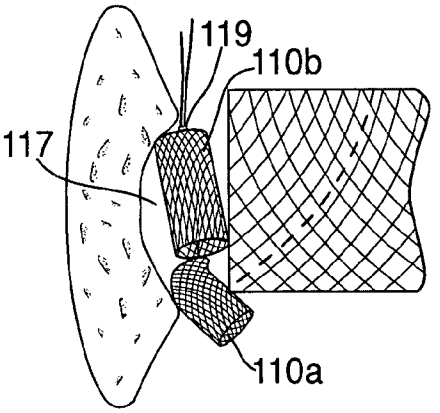


FIG. 11f

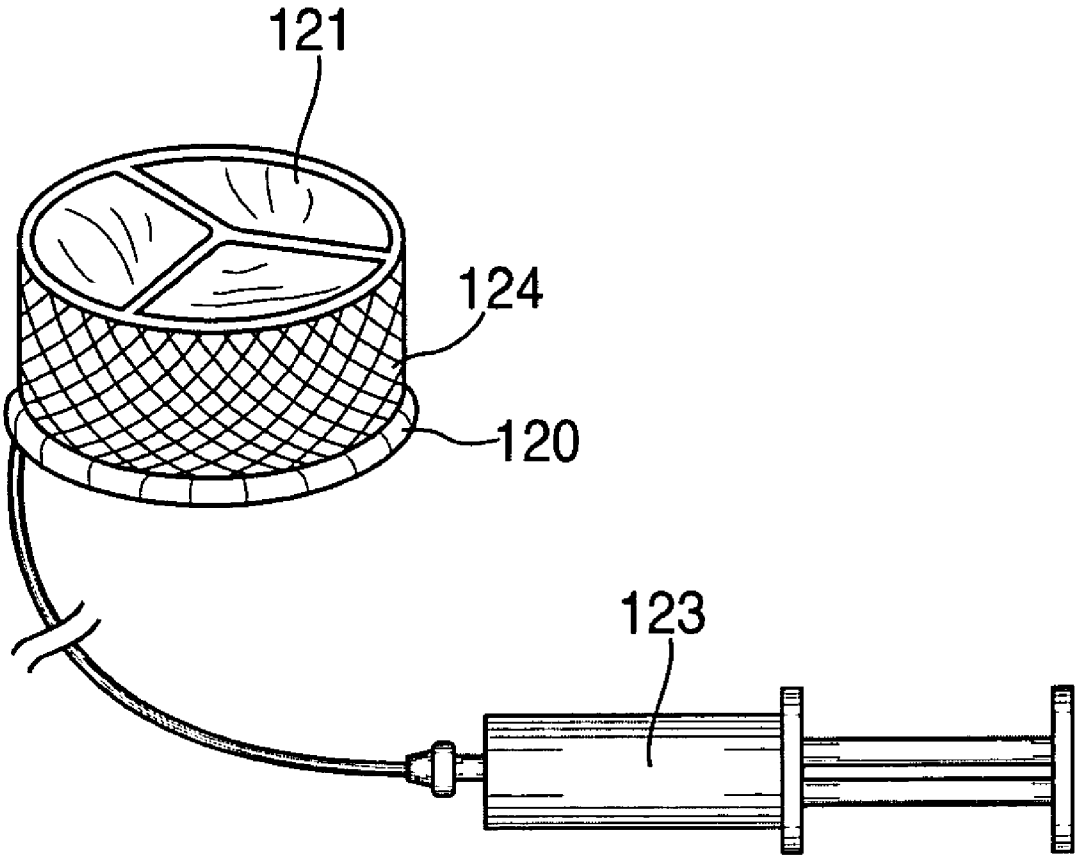


FIG. 12

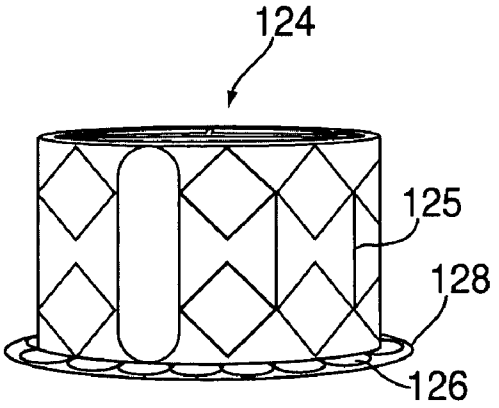


FIG. 13a

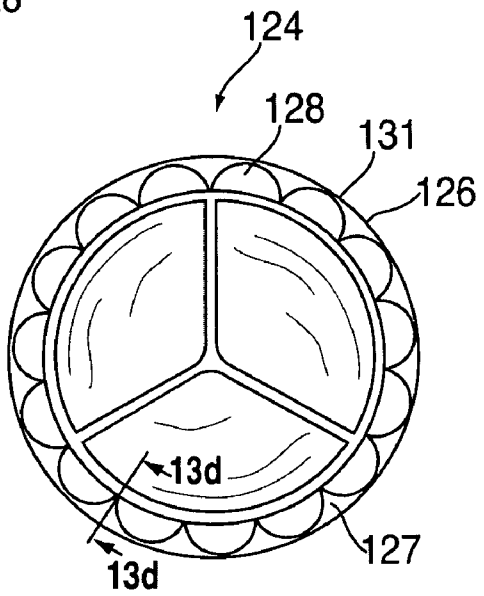


FIG. 13b

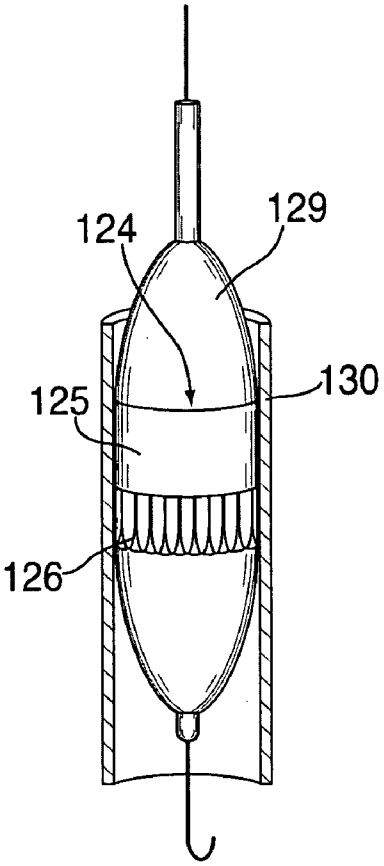


FIG. 13c

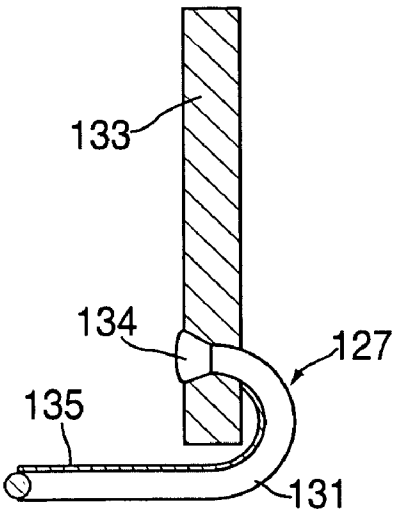


FIG. 13d

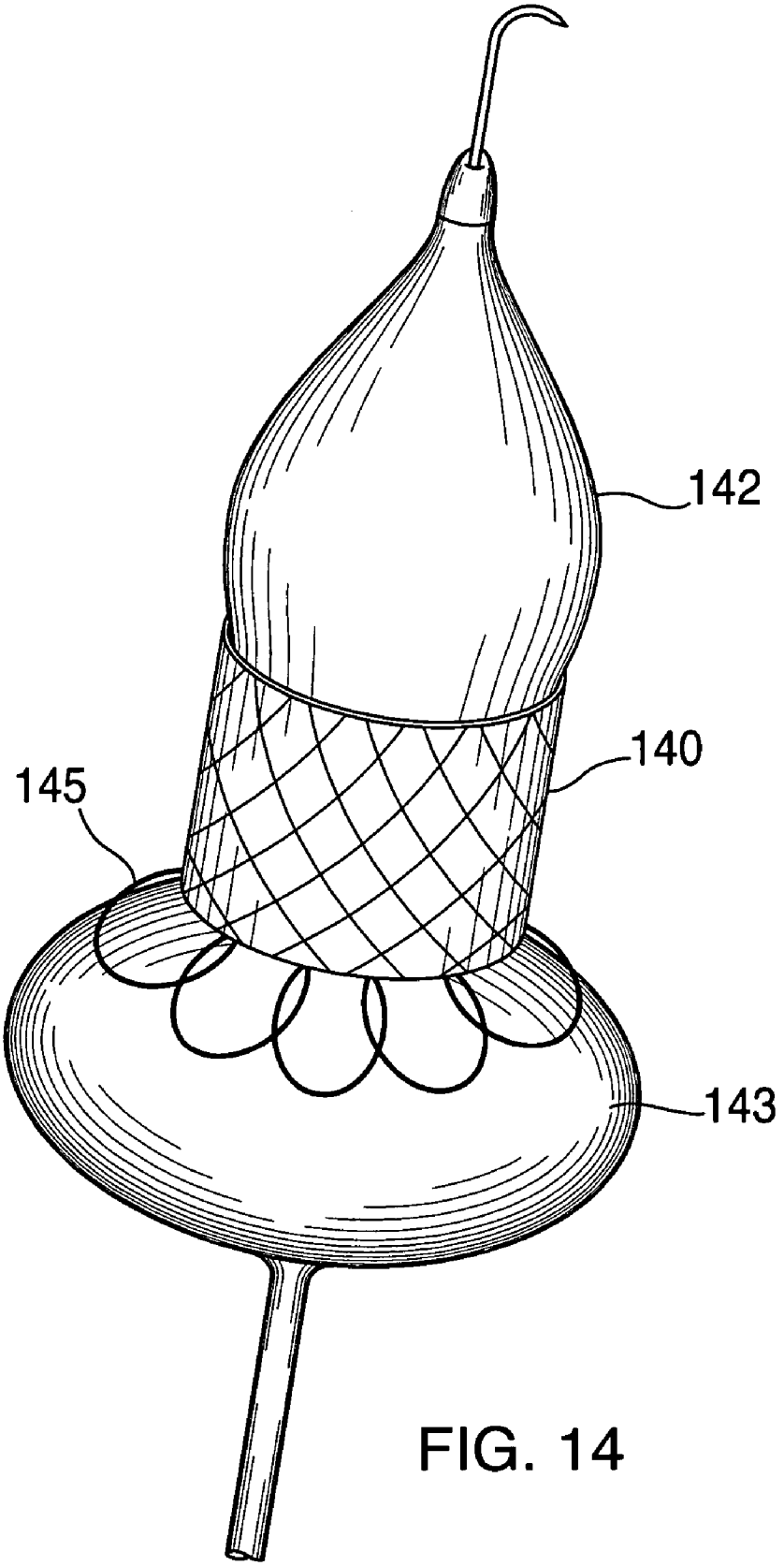


FIG. 14

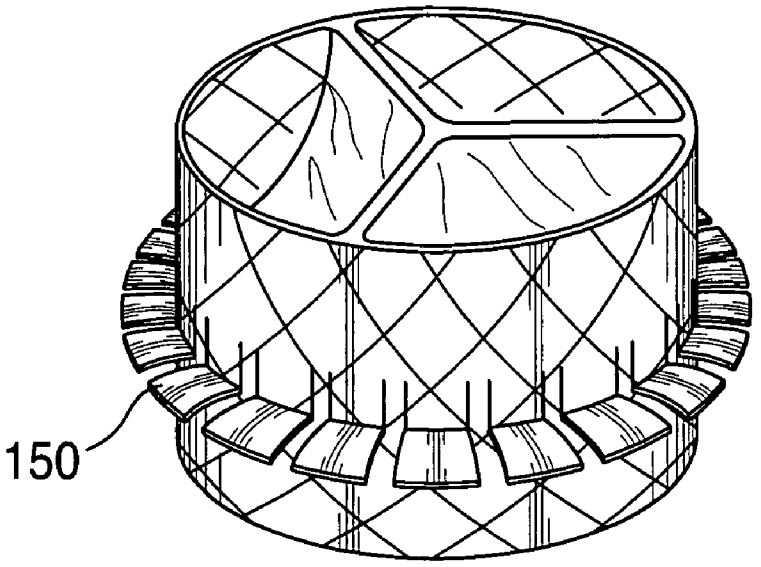


FIG. 15a

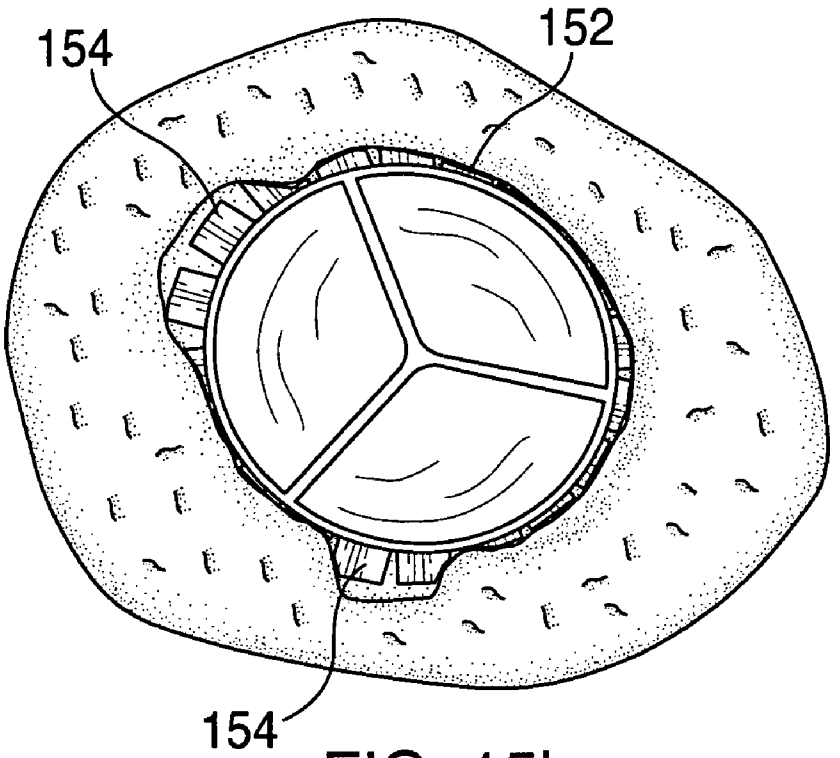


FIG. 15b

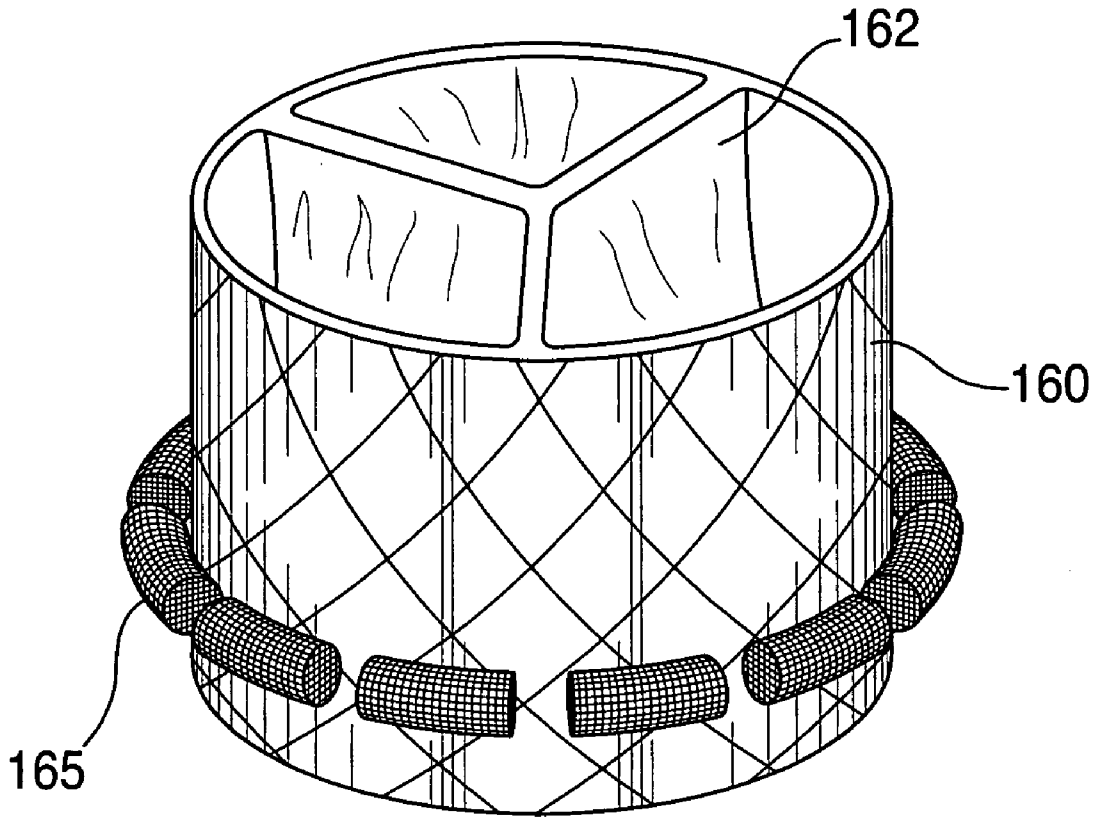


FIG. 16a

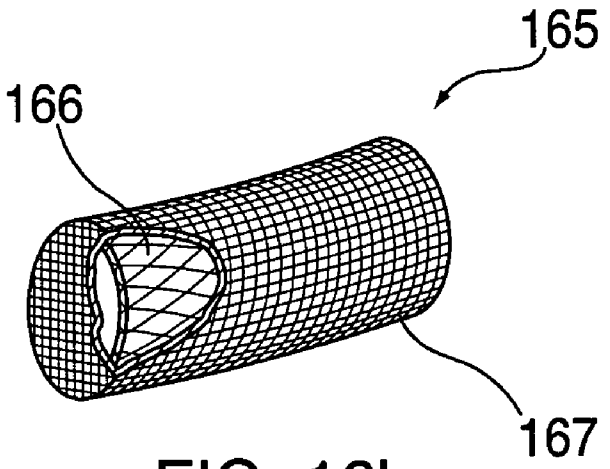


FIG. 16b

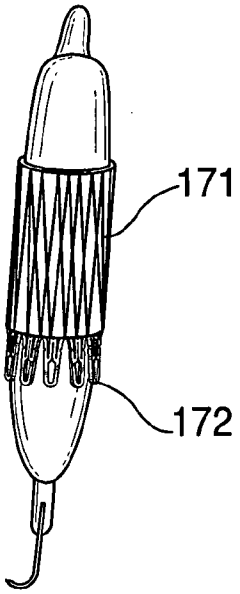


FIG. 17a

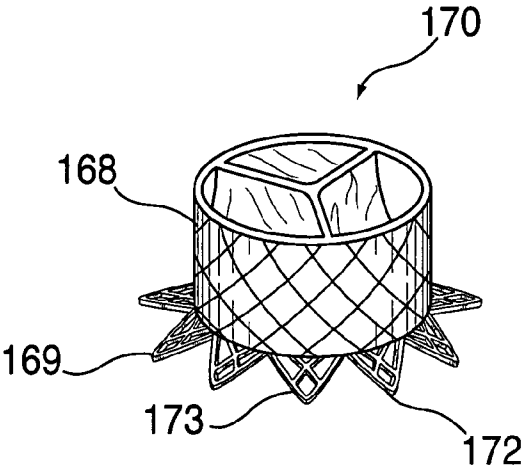


FIG. 17b

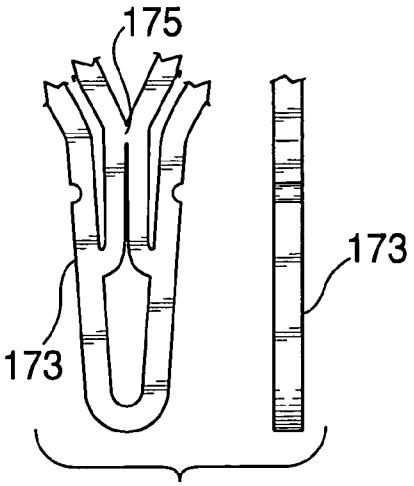


FIG. 17c

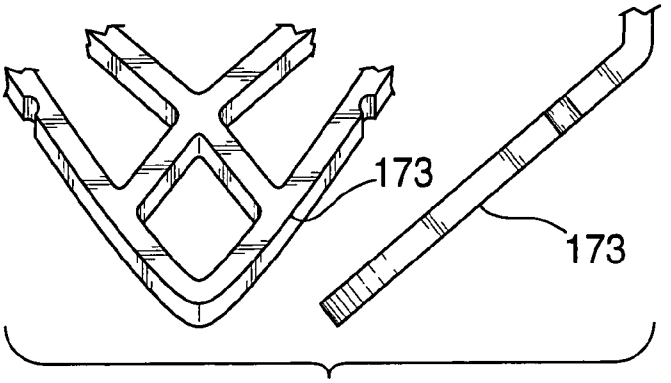


FIG. 17d

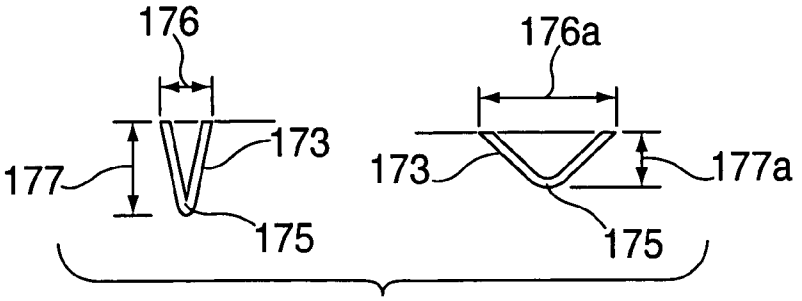


FIG. 17e

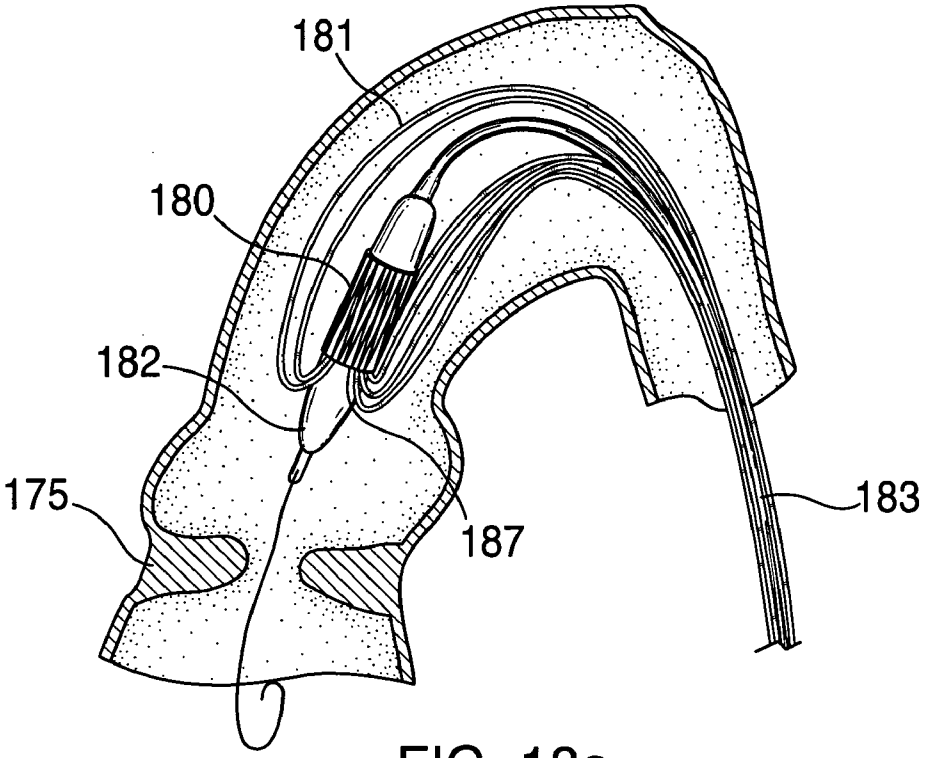


FIG. 18a

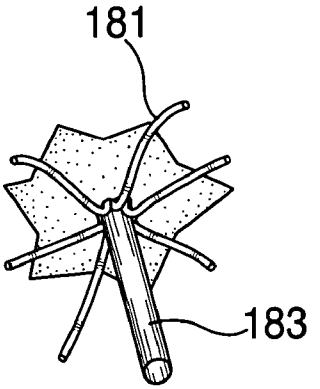


FIG. 18b

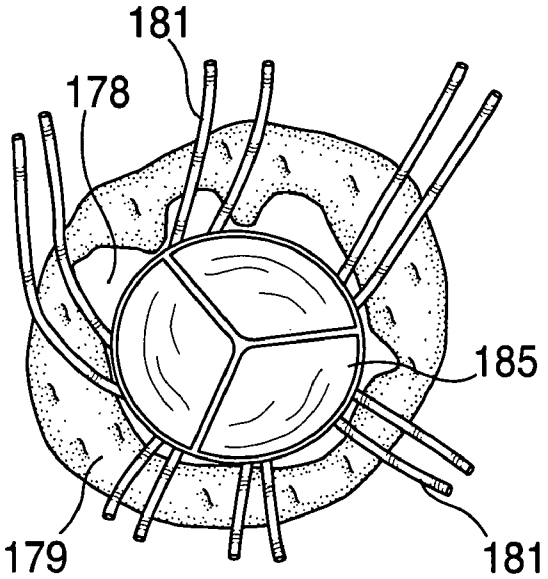


FIG. 18c

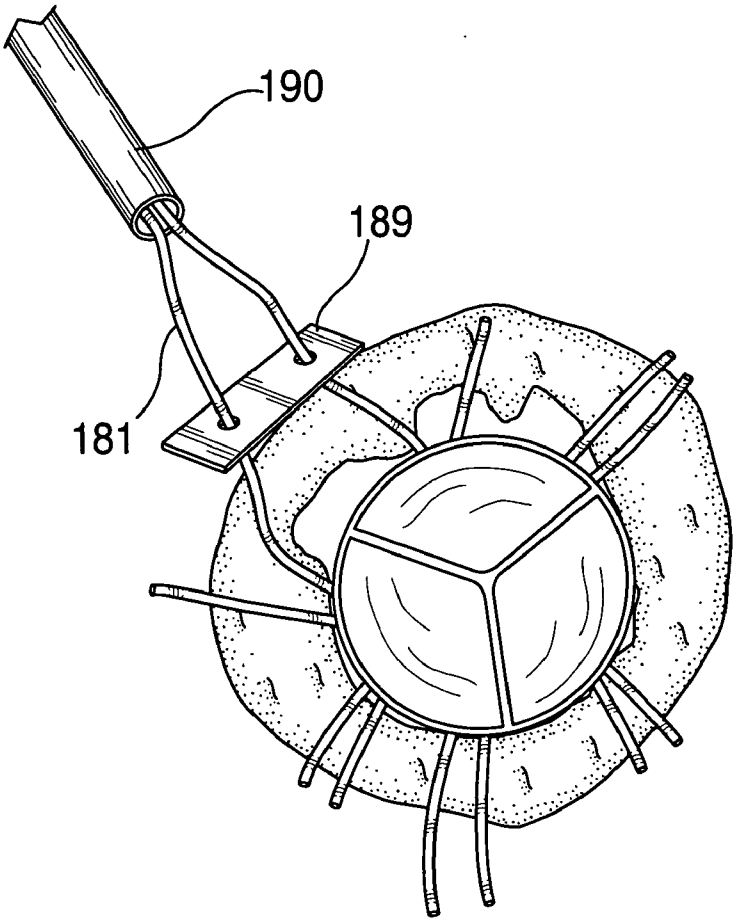


FIG. 18d

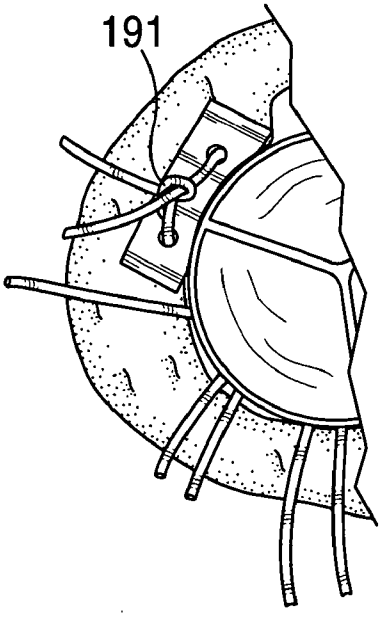


FIG. 18e

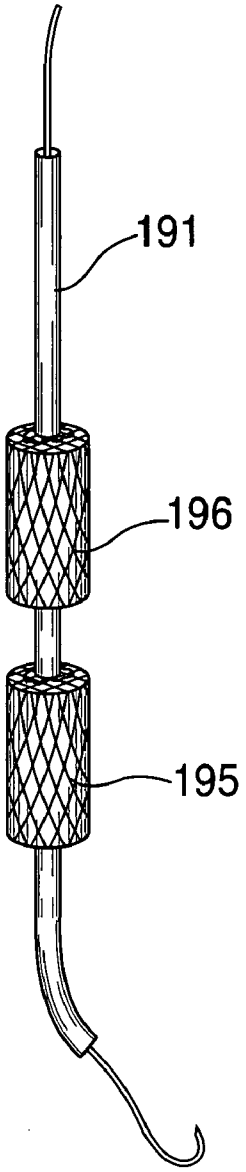


FIG. 19a

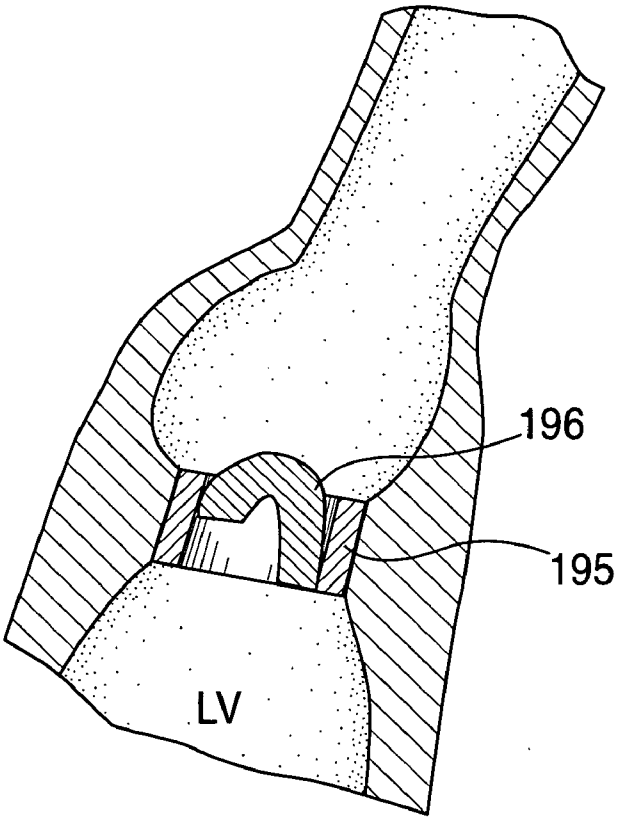


FIG. 19b

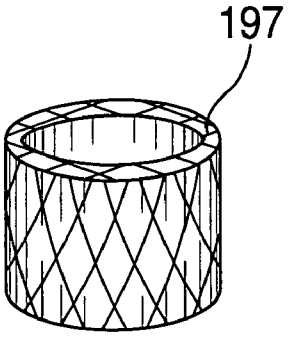


FIG. 19c

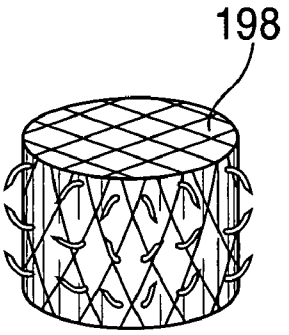


FIG. 19d

# PARAVALVULAR LEAK DETECTION, SEALING, AND PREVENTION

## FIELD OF THE INVENTION

[0001] The present invention relates to implantable devices. More particularly it relates to the prevention, detection, and repair of paravalvular leaks around cardiac valve prostheses.

## BACKGROUND OF THE INVENTION

[0002] Cardiac valve implantation is well known in the art. Less well addressed is how to detect possible leaks between the valve and surrounding blood vessel, how to seal such leaks, or how to design the valve such that it automatically seals the leaks.

[0003] Machiraju in U.S. Pat. No. 5,554,184, entitled "HEART VALVE", describes a heart valve and a technique for effecting valve replacement or repair, which partially or completely replaces the mitral (or tricuspid) valve with an autologous graft from the pericardium, fascia lata or even the dura mater, or a bovine or porcine pericardial or other synthetic sheet material equivalent thereof, preferably in a configuration which substantially restores the original anatomy of the heart, including chordae tendineae attached to adjacent papillary muscles of the heart. Most preferably, a section of the patient's pericardium is cut to a shape including two leaflets, with each leaflet having a trabeculated tier of chordae tendineae terminating in a spear-shaped tab. The two leaflets are cut out as a single unit, and the two far ends are sutured together to yield a bileaflet valve having appended chordae and tabs.

[0004] Machiraju does not address leaks that can occur around the implanted valve.

[0005] Schreck in U.S. Pat. No. 6,454,799, entitled, "MINIMALLY-INVASIVE HEART VALVES AND METHODS OF USE", describes expandable heart valves for minimally invasive valve replacement surgeries. In a first embodiment, an expandable pre-assembled heart valve includes a plastically-expandable annular base having a plurality of upstanding commissure posts. A tubular flexible member including a prosthetic section and a fabric section is provided, with the prosthetic section being connected to the commissure posts and defining leaflets therebetween, and the fabric section being attached to the annular base. In a second embodiment, an expandable heart valve includes an annular tissue-engaging base and a subassembly having an elastic wireform and a plurality of leaflets connected thereto. The annular base and subassembly are separately stored and connected just prior to delivery to the host annulus. Preferably the leaflet subassembly is stored in its relaxed configuration to avoid deformation of the leaflets. The expandable heart valves may be implanted using a balloon catheter. Preferably the leaflets of the heart valves are secured to the commissure regions of the expandable stents using a clamping arrangement to reduce stress.

[0006] Schreck also does not address leaks that can occur around the implanted valve.

[0007] Amplatz in U.S. Pat. No. 6,638,257, entitled, "INTRAVASCULAR FLOW RESTRICTOR," describes an intravascular flow restrictor that comprises a braided tubular structure designed to be placed in the main pulmonary artery for limiting blood pressure in the lungs. The braided structure is designed to be collapsed for placement in a delivery catheter, but when it is ejected from the delivery catheter, it assumes a substantially larger diameter disk shaped device having one or more longitudinal channels or passways therethrough.

[0008] Amplatz also does not address leaks that can occur around the implanted valve. In addition, Amplatz's braided structures are of a shape and size not appropriate for paravalvular leak detection and sealing. Their geometry is designed for the conditions of the transceptal hole and not appropriate for valve leakage.

[0009] Spenser et al. in U.S. Patent Application No. 20030153974, entitled "IMPLANTABLE PROSTHETIC VALVE", describe a prosthesis device suitable for implantation in body ducts. The device comprises a support stent bring comprised of a deployable construction adapted to be initially crimped in a narrow configuration suitable for catheterization through a body duct to a target location and adapted to be deployed by exerting substantially radial forces from within by means of a deployment device to a deployed state in the target location, the support stent bring provided with a plurality of longitudinally rigid support beams of fixed length, and (2) a valve assembly comprising a flexible conduit having an inlet end and an outlet, made of pliant material attached to the support beams providing collapsible slack portions of the conduit at the outlet. When flow is allowed to pass through the valve prosthesis device from the inlet to the outlet, the valve assembly is kept in an open position, whereas a reverse flow is prevented as the collapsible slack portions of the valve assembly collapse inwardly to provide blockage to the reverse flow.

[0010] Spenser et al. also do not address leaks that can occur around the implanted valve.

[0011] With regard to the general topic of prosthetic valves, implantation is currently done either through open heart surgery or by use of newer percutaneous methods, some of which are described in the patents mentioned above. With both methods paravalvular leaks are a known side effect. One way to approach the leak problem is to identify the leak location and repair it. Another approach is to equip the prosthesis with means to prevent the leak ("self-sealing" prosthesis). Both these approaches are encompassed by the present invention.

[0012] Percutaneous introduction of medical devices is a preferred surgical procedure for it involves making only a very small perforation in the patient's skin (usually in the groin or armpit area) under local anesthetic sedation. In contrast, surgical placement involves a large chest, surgical incision and requires general anesthesia, to expose a large portion of a patient's thoracic region. Percutaneous introduction is therefore considered safer and less invasive.

[0013] Percutaneous introduction of a leak detection and repair device or of a self-sealing valve resembles other known interventional cardiologic procedures. The percutaneous deployment procedure and device has an impact on several parameters of the product design, some of which are explained hereinafter.

[0014] In summary, the present invention provides new concepts of percutaneous paravalvular repair, including

means for identifying the leak location, repair techniques, and means for leak prevention that can be engineered into the prosthesis valve itself.

## SUMMARY OF THE INVENTION

[0015] In accordance with a preferred embodiment of the present invention, a catheter-delivered device is provided for locating cavities occurring between a prosthetic valve and the wall of the body vessel where the valve is implanted, the cavities producing paravalvular leaks during diastole. The device comprises at least one of a plurality of flexible wires, the wire having attached to it a balloon, wherein the balloon is pulled by the leak through the cavity and wherein the wire then serves to mark the cavity location.

[0016] Furthermore, in accordance with another preferred embodiment of the present invention, a spacing element is provided to maintain the wires adjacent to the wall of the body vessel.

[0017] There is thus also provided in accordance with a preferred embodiment of the present invention, a catheter-delivered stent for sealing cavities occurring between a prosthetic valve and the wall of the body vessel where the valve is implanted, the cavities producing paravalvular leaks during diastole. The stent, which is delivered via a guidewire to the cavity and held in place in the cavity by friction, comprises a support structure and an impermeable membrane, the membrane preventing the passage of fluids through the stent, thereby sealing the cavity.

[0018] Furthermore, in accordance with another preferred embodiment of the present invention, the sealing stent is balloon-expandable and the membrane comprises a tab spring-hinged to the inside of the stent lumen and sized to occlude the lumen when closed. The tab is held open by the stent balloon during insertion and springs closed when the balloon is removed after the stent is expanded.

[0019] Furthermore, in accordance with another preferred embodiment of the present invention, the sealing stent is self-expandable, wherein the membrane is a material covering at least one end of the stent.

[0020] Furthermore, in accordance with another preferred embodiment of the present invention, the stent is comprised of shape memory material.

[0021] Furthermore, in accordance with another preferred embodiment of the present invention, the material is nitinol.

[0022] Furthermore, in accordance with another preferred embodiment of the present invention, the stent is covered on its external walls with hooks comprised of shape memory material and which extend, upon insertion of the stent, into adjacent body vessel walls.

[0023] Furthermore, in accordance with another preferred embodiment of the present invention, the distal end of the stent-delivery catheter is substantially perpendicular to the wall of the vessel at a point inside the cavity and the stent guidewire terminates in an anchoring mechanism that is inserted through the catheter and into the vessel wall, anchoring itself in the vessel wall and providing greater anchorage for the stent.

[0024] Furthermore, in accordance with another preferred embodiment of the present invention, the anchoring mechanism is a hook comprised of shape memory material that is compressed for catheter delivery into the vessel wall, whereupon the hook extends out, anchoring the guidewire into the vessel wall.

[0025] Furthermore, in accordance with another preferred embodiment of the present invention, the anchoring mechanism is a threaded point that is threaded into the vessel wall anchoring the guidewire into the vessel wall.

[0026] Also provided in accordance with a preferred embodiment of the present invention, is a device for sealing cavities occurring between a prosthetic valve and the wall of the body vessel where the valve is implanted, the cavities producing paravalvular leaks during diastole. The device comprises a first guidewire threaded through the cavity, a second guidewire slidably coupled to the first guidewire and inserted such that the slidable coupling is moved to a desired point in the cavity, a first catheter inserted over the first guidewire to the point in the cavity, a second catheter inserted over the second guidewire to the desired point in the cavity, a first component of a two-component biological adhesive inserted through the first catheter to the desired point, a second component of the two-component adhesive inserted through the second catheter to the desired point, the two components thereby mixing to form a plug that seals the cavity.

[0027] Furthermore, in accordance with another preferred embodiment of the present invention, the device is adapted to apply an adhesive with more than two components.

[0028] Furthermore, in accordance with another preferred embodiment of the present invention, instead of two guidewires and two catheters, a single catheter and guidewire are used for delivery, with the catheter comprising two lumens, each lumen providing delivery for one of the two-component adhesive components, and the catheter terminates in a mixer that forces the components to mix when they exit the catheter in the cavity, thereby creating the plug that seals the cavity.

[0029] Furthermore, in accordance with another preferred embodiment of the present invention, instead of two-component adhesive components being delivered via the catheters, a radiation-cured adhesive is delivered via one of the catheters and a radiation source is delivered via the other catheter, wherein the radiation source is applied to the adhesive to create the plug in the cavity.

[0030] Also provided in accordance with a preferred embodiment of the present invention is a catheter-delivered assembly for sealing cavities occurring between a prosthetic valve and the wall of the body vessel where the valve is implanted, the cavities producing paravalvular leaks during diastole. The assembly is delivered via guidewire to the cavity and comprises two sealing stents connected by a suture, the suture running back up the catheter, the sealing stents comprising a stent structure and sealing membrane. One stent of the assembly is inserted underneath the cavity and the other stent is inserted inside the cavity, the membranes preventing the passage of fluids through the stent, thereby sealing the cavity and each stent helping anchor the other in place.

[0031] There is thus also provided in accordance with a preferred embodiment of the present invention, a prosthetic valve with integrated sealing ring attached to the outside

wall, the ring having a circumference greater than that of the valve and elastically conforming to seal cavities between the valve and the wall of the body vessel where the valve is implanted, the cavities producing paravalvular leaks during diastole.

[0032] Furthermore, in accordance with another preferred embodiment of the present invention, the ring comprises a balloon.

[0033] Furthermore, in accordance with another preferred embodiment of the present invention, the ring comprises a plurality of spring-wire tabs mounted adjacent to one another around the circumference of the valve and covered with an impermeable membrane. The tabs are folded against the body of the valve during catheter delivery, and, upon egress from the catheter, the tabs spring out to form the sealing ring.

[0034] Furthermore, in accordance with another preferred embodiment of the present invention, the ring comprises a plurality of impermeable tabs mounted adjacent to one another around the circumference of the valve, and further comprises a balloon under the tabs. The tabs are folded down on the deflated balloon during catheter delivery, and, upon egress from the catheter, the balloon is inflated, thereby opening the tabs to form the sealing ring.

[0035] Furthermore, in accordance with another preferred embodiment of the present invention, the ring comprises a plurality of impermeable tabs mounted adjacent to one another around the circumference of the valve, each tab spring-hinged to the valve. The tabs are folded against the body of the valve during catheter delivery, and, upon egress from the catheter, the tabs spring out to form the sealing ring.

[0036] Furthermore, in accordance with another preferred embodiment of the present invention, the ring comprises at least one of a plurality of flexible, self-expanding sealing elements comprised of self-expanding mesh covered with an impermeable membrane.

[0037] Furthermore, in accordance with another preferred embodiment of the present invention, the ring comprises at least one of a plurality of flexible, self-expanding sealing elements comprised of self-expanding mesh covered with an impermeable membrane.

[0038] Furthermore, in accordance with another preferred embodiment of the present invention, the sealing ring comprises modified struts of the stent, the modification comprising geometrical constraints that, upon expansion of the stent, cause the struts to bend out from the stent body, thereby creating the sealing ring.

[0039] There is thus also provided in accordance with a preferred embodiment of the present invention, a prosthetic valve with integrated sealing means, the sealing means comprising sutures attached around the perimeter of the valve and extending back out of the body. Patches can be pushed down the sutures and attached to the point where the suture is attached to the valve, thereby sealing any cavity existing between the valve and the wall of the body vessel where the valve is implanted, the cavities producing paravalvular leaks during diastole.

[0040] There is thus also provided in accordance with a preferred embodiment of the present invention, a catheter-delivered prosthetic valve with integrated sealing means, the sealing means comprising an elastic stent that is first deployed and inside which the valve is deployed. The elastic stent seals any cavity existing between the valve and the wall of the body vessel where the valve is implanted, the cavities producing paravalvular leaks during diastole.

[0041] There is thus also provided in accordance with a preferred embodiment of the present invention, a method for locating cavities between an implanted prosthetic valve and the wall of the body vessel where the valve is implanted, the cavities producing paravalvular leaks during diastole. The method comprises:

[0042] inserting a balloon mounted on a flexible wire next to the valve,

[0043] wherein the balloon is pulled by the leak through the cavity and wherein the wire then serves to mark the cavity location.

[0044] There is thus also provided in accordance with a preferred embodiment of the present invention, a method for sealing cavities between an implanted prosthetic valve and the wall of the body vessel where the valve is implanted, the cavities producing paravalvular leaks during diastole. The method comprises:

[0045] inserting an impermeable stent into the cavity,

[0046] whereby the stent seals the cavity.

[0047] There is thus also provided in accordance with a preferred embodiment of the present invention, a method for sealing cavities between an implanted prosthetic valve and the wall of the body vessel where the valve is implanted, the cavities producing paravalvular leaks during diastole. The method comprises:

[0048] inserting a first guidewire into the cavity;

[0049] running a loop attached to a second guidewire over the first guidewire to a point inside the cavity;

[0050] injecting one component of a two-component adhesive through a catheter over the first guidewire to the cavity; and

[0051] injecting the second component of the two-component adhesive through a catheter over the second guidewire to the cavity,

[0052] wherein the components combine to create an adhesive plug that seals the cavity.

[0053] Furthermore, in accordance with another preferred embodiment of the present invention, instead of the first adhesive component, a radiation-cured adhesive is injected and instead of the second adhesive component a radiation source is applied, thereby creating the adhesive plug.

[0054] Furthermore, in accordance with another preferred embodiment of the present invention, only one guidewire is used and the two components are inserted via separate lumens within a single catheter over the guidewire.

[0055] There is thus also provided in accordance with a preferred embodiment of the present invention, a method for providing integrated sealing capability in an implanted prosthetic valve and the wall of the body vessel where the valve is implanted, the cavities producing paravalvular leaks during diastole. The method comprises:

[0056] providing an expandable elastic ring around the outside of the valve; and

[0057] expanding the ring,

[0058] wherein the ring seals any cavities.

[0059] There is thus also provided in accordance with a preferred embodiment of the present invention, a method for sealing cavities between an implanted prosthetic valve and the wall of the body vessel where the valve is implanted, the cavities producing paravalvular leaks during diastole. The method comprises:

[0060] inserting a sealing stent at the distal end of the cavity; and

[0061] inserting a second sealing stent attached to the first stent into the cavity.

## BRIEF DESCRIPTION OF THE FIGURES

[0062] To better understand the present invention and appreciate its practical applications, the following Figures are provided and referenced hereafter. It should be noted that the Figures are given as examples only and in no way limit the scope of the invention as defined in the appended claims. Like components are denoted by like reference numerals.

[0063] **FIG. 1** illustrates an implanted valve with a cavity creating a paravalvular leak and a device, in accordance with a preferred embodiment of the present invention, comprising a soft guidewire with an inflatable balloon and designed to identify the exact location of the paravalvular leak.

[0064] **FIGS. 2***a* and **2***b* depict a plurality of balloons on soft guidewires, in accordance with another preferred embodiment of the present invention, designed to identify paravalvular leaks around an implanted valve.

[0065] **FIG. 3** illustrates a plurality of balloons on soft guidewires and kept along the perimeter of the blood vessel by a ring, in accordance with another preferred embodiment of the present invention, designed to identify paravalvular leaks around an implanted valve.

[0066] **FIGS. 4***a* to **4***c* depict the process, in accordance with another preferred embodiment of the present invention, of inserting a sealing stent over a guidewire to close a paravalvular leak.

[0067] **FIGS. 5***a* to **5***d* depict several types of sealing stents, in accordance with another preferred embodiment of the present invention.

[0068] **FIGS. 6***a* to **6***d* illustrate blocking a paravalvular leak with a sealing device, in accordance with another preferred embodiment of the present invention, assisted by anchors, which attach the device to the aortic wall (or annulus).

[0069] **FIG. 7** illustrates an anchoring apparatus, in accordance with another preferred embodiment of the present invention, for achieving sealing as shown in **FIG. 6**, in this case by use of a screw, which is embedded into to the aortic wall (or annulus).

[0070] **FIGS. 8***a* and **8***b* depict a leak repair done, in accordance with another preferred embodiment of the present invention, using a two-component biological glue.

[0071] **FIGS. 9***a* to **9***c* depict a leak repair done, in accordance with another preferred embodiment of the present invention, using an ultra-violet light-cured biological glue.

[0072] **FIG. 10** illustrates a catheter, in accordance with another preferred embodiment of the present invention, that inserts a two-component biological glue into a balloon in order to block a paravalvular leak.

[0073] **FIGS. 11***a* to **11***f* illustrate a device and procedure, in accordance with another preferred embodiment of the present invention, for blocking a paravalvular leak using two connected sealing stents.

[0074] **FIG. 12** depicts a valve, in accordance with another preferred embodiment of the present invention, with a built-in inflatable portion allowing to fill gaps between the valve stent and the aortic wall in order to prevent paravalvular leaks.

[0075] **FIGS. 13***a* to **13***d* illustrate a valve, in accordance with another preferred embodiment of the present invention, having a flexible and self-expanding portion for blocking possible leaks around the stent.

[0076] **FIGS. 14***a* to **14***c* illustrate a valve, in accordance with another preferred embodiment of the present invention, having a having a flexible and self-expanding portion for blocking possible leaks around the stent.

[0077] **FIGS. 15***a* to **15***c* illustrate a valve, in accordance with another preferred embodiment of the present invention, having a plurality of flexible and expanding segments on its proximal side for blocking possible leaks around the stent.

[0078] **FIGS. 16***a* and **16***b* illustrate a valve device, in accordance with another preferred embodiment of the present invention, comprising an additional portion for blocking possible leaks around the stent.

[0079] **FIGS. 17***a* to **17***e* illustrate a valve device, in accordance with another preferred embodiment of the present invention, where the stent is adapted such that when expanded, a portion of the stent is forced to protrude radially, thereby blocking possible leaks.

[0080] **FIGS. 18***a* to **18***e* illustrate a valve, in accordance with another preferred embodiment of the present invention, constructed with additional sutures attached to the proximal side, allowing attachment of extra pieces of pericardium or artificial fabric for blocking paravalvular leaks.

[0081] **FIGS. 19***a* to **19***d* depict a procedure, in accordance with another preferred embodiment of the present invention, the procedure comprising two stages: first, insertion of a stent that includes an outer sealing layer; and second, insertion of a prosthetic valve through the stent.

## DETAILED DESCRIPTION OF THE INVENTION

[0082] The present invention provides methods and apparatuses for substantially reducing or effectively eliminating the deleterious effects of paravalvular leaks in prosthetic valves. More specifically, it enables locating, sealing, and preventing paravalvular leaks using both dedicated and integrated (with the valve) means.

[0083] While the present invention is particularly suited for prosthetic heart valve leaks, such as a prosthetic aortic valve, it can also be applied to other leakage problems such as in other blood vessels, a septum, or other body lumens. Similarly, while the prosthetic valve described herein are tricuspid valves, it could be another type of valve as well.

[0084] A main aspect of the present invention is the introduction of several novel designs and methods for locating paravalvular leaks in prosthetic valves.

[0085] Another main aspect of the present invention are several novel designs for sealing paravalvular leaks detected in prosthetic valves.

[0086] Another main aspect of the present invention are several novel designs for modifying percutaneous prosthetic valves to automatically seal paravalvular leaks when the valve is implanted.

[0087] Another main aspect of the present invention is a novel design that automatically seals paravalvular leaks when the valve is implanted without requiring valve modification.

[0088] Another main aspect of the present invention is the disclosure of several novel designs for modifying percutaneous prosthetic valves to enable sealing of paravalvular leaks after the valve is implanted.

[0089] For locating paravalvular leaks, the present invention provides several designs comprising catheter-delivered balloons mounted on flexible guidewires. The balloons are delivered to a point near the valve. When regurgitation (leaking) occurs during diastole, the balloons are drawn into the leak-producing cavities occurring between the valve and the wall of the blood vessel, thereby providing a means to deliver means for sealing the leak.

[0090] For sealing paravalvular leaks, the present invention provides several designs including sealing stents, and multi-component and radiation-cured adhesive compounds.

[0091] Sealing stents are crimped stents that are delivered to the leak location, expanded, and anchored in place. The stents are designed to block flow, thereby sealing the leak. Several innovations are provided for these operations.

[0092] Delivery of the sealing stent is via a guidewire that is anchored in the wall of the blood vessel at the leak location. The anchoring means can be a hook, for example a multi-headed hook composed of a shape memory alloy, such as nickel titanium (also known as nitinol), which is crimped at low temperature for delivery. The anchoring means expands back to its original shape due to the higher temperature of the blood vessel wall at its deployment point, thereby anchoring itself into the blood vessel wall.

[0093] Another anchoring means is for the guidewire to be terminated in a screw, which can be threaded into the blood vessel wall.

[0094] Once delivered to the leak location via the guidewire, the sealed stent is expanded. This can be done by another agent, such as a balloon, or by making the stent self-expanding. In the case of balloon inflation, the stent is crimped around the deflated balloon prior to insertion in the delivery catheter. Upon delivery the balloon is inflated, thereby expanding the stent, and then the balloons can be deflated and withdrawn. In the case of the self-expanding stent, the stent is preferably built from a shape memory alloy, such as nickel titanium (also known as nitinol), which can be crimped at low temperature for delivery, expanding back to its original shape due to the higher body temperature at the deployment site. Alternatively the self-expanding stent can be a metallic stent comprised of a physiologically acceptable metal such as stainless steel or an alloy such as nitinol, which is compressed or wound on a delivery, catheter or device. When the stent is released from the delivery catheter or device, it expands.

[0095] The sealing stent is held in place by friction. Additional holding force can be obtained by adding hooks around the perimeter of the stent, such as self-expanding hooks made of shape memory alloy.

[0096] The expanded stent includes an internal element that seals the stent's own lumen, preventing flow through the stent and thereby sealing the cavity causing the leak. Examples of internal sealing elements include a spring-hinged flap inside the stent lumen that opens upon stent expansion or, in the case of the self-expanding stent, a membrane covering one or both openings of the stent.

[0097] In some cases, it may be preferred to use two sealing stents. In this embodiment, the two stents are connected in series by a suture. The delivery catheter is extended through the top of the cavity and out the bottom of the cavity to deploy one of the sealing stents and then, together with the stents' guide wire, retracted. This pulls the deployed stent back until it catches in the bottom of the cavity. The catheter is further retracted, and the second stent is deployed into the cavity. The catheter is further retracted and the second stent is pulled back, catching it (from the bottom) in the top of the cavity.

[0098] An alternative sealing element to the sealing stent is a biological adhesive compound that can be delivered to the cavity via catheter. In such a case, two catheters are brought to the leak location. The catheters are used in one of the following ways: to deliver two adhesive components that, when mixed, harden to form an adhesive sealing plug, or to deliver a radiation-cured adhesive and the cure source, for example an ultra-violet light source, to produce an adhesive sealing plug.

[0099] In both sealing element designs there is a need to bring the distal catheter ends in close proximity to one another, for proper mixing or curing, at the leak point. This is accomplished as follows: a first catheter is used to insert the leak detector guidewire mentioned above. A second guidewire is fitted with a loop, and the loop is run over the first guidewire until it reaches the leak location. The respective cathethers are then slid over their guidewires to meet at the leak location, thereby providing egress for applying the bi-component adhesive or radiation-cured adhesive.

[0100] Another delivery design for a bi-component adhesive utilizes a single catheter run over the leak detection guidewire. The catheter has three lumens: one to track the guidewire and one for each adhesive component. A mixing means at the distal end of the catheter mixes the components at the leak location to form the sealing plug.

[0101] In other embodiments of the present invention, leak sealing means are integrated into the valve as an impermeable ring that, when the valve is implanted, adaptively seals any gaps between the valve and the surrounding lumen.

[0102] In one embodiment of such a self-sealing valve, the ring is deflated for delivery and then inflated for sealing.

[0103] In another self-sealing valve embodiment, the ring is a sponge-like material that is compressed for delivery and then expands for sealing.

[0104] In another self-sealing valve embodiment, the ring comprises a set of flaps that are closed for delivery and are opened either by balloon inflation, by the geometry of their connection to the valve, or by spring-action.

[0105] In another self-sealing valve embodiment, the ring comprises a set of self-expanding tubes.

[0106] In another self-sealing valve embodiment, the ring comprises struts of the valve's stent that are geometrically constrained to bend and enlarge their final diameter in respect to the main stent geometry when expanded from the crimped form

[0107] In another embodiment where sealing means are built into the valve, a set of filament pairs are attached around the valve and feed back to the delivery catheter ingress. When a paravalvular leak is detected, impermeable patches of a material such as pericardium are threaded onto the local filament pair and pushed down to the leak location where they are tied off in place.

[0108] In another embodiment of the present invention, a sealing stent is first inserted into the lumen, and then the valve is inserted inside the sealing stent.

[0109] The aforementioned embodiments as well as other embodiments, manufacturing methods, different designs and different types of devices are discussed with reference to the drawings. Note that the drawings are only given for the purpose of understanding the present invention and presenting some preferred embodiments of the present invention. The drawings are not meant to limit the scope of the present invention as defined in the appended claims.

[0110] **FIG. 1** illustrates a simple leak detector **27** in accordance with a preferred embodiment of the present invention. Leak detector **27** detects a leak between general tricuspid implantable prosthesis valve **20** and the aortic annulus **22**. Leak detector **27** will typically be used together with leak sealing devices, like those described later in this specification.

[0111] A cavity **24** exists between the perimeter of valve **20** and aortic annulus **22**. The cavity could have any number of causes, including calcification or other irregularities in the aortic annulus **22** that prevent proper sealing between the valve **20** and the annulus **22**. The cavity will cause regurgitation (leaking) during diastole, characterized by blood flowing **25** from the aorta into the left ventricle. Leak detector **27**, is delivered through catheter **21** to a position above valve **20**. Leak detector **27** comprises a soft guide wire **28** on which is mounted inflatable balloon **29**, which is inflated after leak detector **27** has been passed through catheter **21**. Guidewire **28** is soft enough that during diastole inflated balloon **29** is drawn into the regurgitation flow and lodges in cavity **24** in between valve **20** and annulus **22**.

[0112] **FIGS. 2***a* and **2***b* depict a multiple leak detector **228** that is similar to leak detector **27** of **FIG. 1** but which comprises a plurality of soft guidewires **31** rather than just the single guidewire **28** of detector **27**. On each guidewire **31** is mounted a balloon **35**. **FIG. 2***b* is a top view showing valve **20** during diastole. Two cavities **24** cause a flow of blood, which pulls the balloon **35** closest to each cavity **24** into that cavity while remaining balloons **35** stay stationary. At this point, cavity **24** locations can be determined and marked and the cavities repaired.

[0113] **FIG. 3** illustrates an annular-configured leak detector **229**, which incorporates an adaptation that can be used to force wire(s) **40** of leak detector **27** or multiple-leak detector **228** (implementation shown) to remain close to aortic wall **45** rather than being allowed to drift to the center of the aorta. The advantage of this adaptation is that, in the case of detectors **27** and **228**, if there is a central leak in valve **20**, a balloon near the center of the aorta might be drawn into the central leak instead of to the paravalvular cavity, thereby indicating a false paravalvular leak. Spacing ring **40** is a compressible wire ring that pops open after catheter **21** delivery. Guidewire(s) **42** are distributively attached to the external edge of ring **40** and are thereby held by the ring against the aortic wall **45**.

[0114] **FIGS. 4***a* to **4***c* depict an implantable valve **49** deployed in the native aortic valve position, creating a cavity **24**, which causes paravalvular regurgitation (leak) during diastole. In **FIG. 4***a*, guidewire **46**, which can be a leak detection device like those shown in **FIGS. 1, 2**, and **3**, is inserted through cavity **24**. Balloon **33** is deflated. In **FIG. 4***b*, a balloon-expandable sealing stent (stent with an impermeable membrane that prevents the passage of fluids through the stent), is catheter-deployed over guidewire **46**. Balloon **33** is inflated, causing balloon-expandable sealing stent **47** to be expanded, thereby sealing cavity **24** and stopping the paravalvular leak. **FIG. 4***c* shows a similar leak repair with the difference that a self-expanding sealing stent **48** is used, and therefore balloon inflation is not required. The sealing stents **47** and **48** are anchored by friction between themselves and the surrounding aortic annulus. Means for providing stronger anchoring for sealing stents are described later in this specification.

[0115] **FIGS. 5***a* and **5***b* illustrate an embodiment of a balloon-expandable sealing stent (such as that used in **FIG. 4***b*) in accordance with another preferred embodiment of the present invention. The outer part **51** of the stent is made of a material that can be reshaped by plastic deformation. Sealing element **52**, comprising an impermeable membrane, is connected to the inside wall of outer part **51** by spring hinge **53**. The balloon-expandable sealing stent **47** is crimped on balloon **55**. Once balloon **55** has reached cavity **24**, the balloon is inflated, thereby expanding the sealing stent (**FIG. 5***a*). Balloon **33** is then deflated, whereupon (**FIG. 5***b*) sealing element **52** is forced by spring **53** to close and seal the lumen of the stent.

[0116] **FIGS. 5***c* and **5***d* show a self-expanding sealing stent (such as that used in **FIG. 4***c*) in accordance with another preferred embodiment of the present invention. One way to implement the self-expanding sealing stent is to build stent framework **56** from a shape memory material such as nitinol **56** and cover it with a layer of impermeable material **58**. The self-expanding sealing stent is catheter-delivered to the cavity, whereupon the stent opens, its shape adjusting to the shape of the cavity and its impermeable covering **58** sealing the cavity, to prevent the paravalvular regurgitation. To anchor the self-expanding sealing stent in place, hooks **59**

can be included on framework **56**. Hooks **59** are attached to framework **56** and extend through sealing material **58** and into the wall of the aortic annulus. The hooks are self-extending. One way to implement them is to make them from a shape memory material such as nitinol.

[0117] **FIGS. 6***a* to **6***d* illustrate a technique for anchoring a sealing stent **66** (such as balloon-expandable sealing stent **47** or self-expanding sealing stent **48**) into an open cavity **24**, which is situated between aortic annulus **63** and prosthetic valve **20**, and which creates paravalvular regurgitation. In **FIG. 6***a*, a guidewire **61** is led through cavity **24** by balloon **29** (this can be done with a device such as those disclosed in FIGS. **1** to **3**). Guiding catheter **603** is fed over the guidewire, and the guidewire is removed. In FIG. **6***b* an additional wire, anchoring wire **67**, which terminates in anchoring apparatus **65**, is inserted through catheter **63** to the anchoring location in cavity **24**. Anchor **65** is a hook with one or more hook heads that can be compressed for delivery and will spring back to their original position when the delivery compression is removed (in other words, when the device emerges from the delivery catheter). Anchor **65** could be composed of flexible metal or a shape memory compound. Anchor **65** penetrates the aortic annulus at an approximately perpendicular angle due to the angled tip of guiding catheter **603**. **FIG. 6***c* shows sealing stent **66** inserted via anchoring wire **67** and expanded to seal the cavity by one of the methods described in **FIG. 4** or **5**. In the case shown in **FIG. 6***c*, a self expandable sealing stent as described in **FIG. 4** is shown. This method enables improved anchoring forces in comparison to friction alone, which is the sole anchoring for the embodiments shown **FIGS. 4 and 5**. **FIG. 6***d* shows the final step of the procedure, where the wire is detached from the anchor at detaching point **68**.

[0118] **FIG. 7** depicts an apparatus that is similar to that illustrated in **FIG. 6**, only here anchor **65** is implemented as a screw tip **69**. The anchoring is accomplished by rotating anchoring wire **67**, thereby threading tip **69** into aortic annulus **22**.

[0119] **FIGS. 8***a* to **8***d* demonstrate an apparatus for repairing a paravalvular leak by means of biological bi-component adhesive material (such as an epoxy resin), the components of which are in liquid form and turn to solid when mixed, in accordance with another preferred embodiment of the present invention. The leak is caused by an open cavity between valve **20** and annulus **22**. A leak detector, such as those shown in FIGS. **1** to **3**, is used to run guidewire **83** through cavity **24**. A second guidewire **84** with a slide element **85** is slid over the first guide wire **83**. Slide element **85** enables second guidewire **84** to slide over first guidewire **28** and can be a ring at the end of second wire **84**. In **FIG. 8***b*, when slide element **85** and first guidewire **83** reach a point approximately midway through cavity **24**, catheters **86** and **87** are slid over guidewires **28** and **84**, respectively, until the catheters meet at meeting point **75**.

[0120] In **FIG. 8***c* one of the components of a biological bi-component adhesive material is injected via catheter **86**, and the other component is injected via catheter **87**. The liquid adhesive components meet at the catheter outlets at meeting point **75**, mixing to create the adhesive blocking element **89**, which repairs the paravalvular leak by closing cavity **24**. **FIG. 8***d* depicts a top view of the final result of the repaired cavity showing that adhesive blocking element has been formed to seal cavity **24** between valve **20** and annulus **22**.

[0121] **FIG. 9** illustrates another apparatus for blocking a leak by means of biological adhesive in accordance with another preferred embodiment of the present invention. Again, two guidewires meet at meeting point **75**, and catheters, in this case **91** and **93**, are fed over the guidewires to meeting point **75**. However, in this case the blocking adhesive material comprises one liquid component that is solidified by the presence of ultra-violet light or another radiation cure. The liquid adhesive material is inserted into cavity **24** at catheter meeting point **75** via catheter **91**. Active wave **96** shining through light probe catheter **93** hardens the material, creating sealing block **95**, which closes the leak caused by cavity **24**.

[0122] **FIGS. 10***a* to **10***e* illustrate another apparatus for repairing a paravalvular leak using a bi-component adhesive material in accordance with another preferred embodiment of the present invention. **FIG. 10***a* shows a multiple-lumen catheter **100** that can be slid over guidewire **99** to the desired location, inside cavity **24** between aorta **82** and prosthetic valve **81**. **FIG. 10***b* is a cross-section of the catheter **100**'s multiple-lumen shaft. Lumens **102** and **103** provide means of approach for the separate components of the adhesive. Lumen **104** provides means for catheter to be fed over guidewire **28**. **FIG. 10***c* shows a bi-component adhesive infusion chamber **100** in the form of a double syringe connected to the end of catheter **100** that is proximal to the medical operator. **FIG. 10***d* illustrates a mixing element **105** located at the distal end of catheter **100** (its location can be seen in **FIG. 10***a*). Mixing element **105** serves to mix the two adhesive components as they emerge from distal end of catheter **100** after being forced out of chamber **101**, thereby ensuring that they will solidify and cure inside cavity **24**. **FIG. 10***e* shows the adhesive components after they have been infused by chamber **101** via multiple-lumen catheter **100** and mixing element **105** into cavity **24** to form a plug. The cured adhesive fills the cavity and blocks the leak. Also shown in **FIG. 10***e* is an optional flexible mesh bag **106**, which receives and holds the adhesive mix. The bag prevents possible migration of adhesive material during insertion and prevents the adhesive from passing through stent struts **108** in cases where such valve designs are present.

[0123] **FIGS. 11***a* to **11***f* illustrate an apparatus for repairing a paravalvular leak in accordance with another preferred embodiment of the present invention. Two self-expanding sealing stents **110** are connected by suture **112** and pushed into insertion catheter **111** (**FIG. 11***b*). At this stage, insertion into the catheter has reduced the stents' diameter, enabling them to enter a cavity **24** between a prosthetic valve and surrounding blood vessel. **FIGS. 11***c* and **1***d* depict an implanted valve **115** where two large calcifications **116** create cavity **117**, which causes regurgitation and must be repaired. (The calcification is just one example of a condition that creates a cavity that must be repaired. The cavity could equally have been caused by other factors, the cause is not determinant for the embodiment.) **FIG. 1***e* depicts insertion catheter **111** inserted over guidewire **28** to a point where the distal (delivery) end of the catheter has passed through the bottom of cavity **117**. A first sealing stent **110** is deployed below the bottom of cavity **117**. Catheter **111** is withdrawn and suture **112** is partially retracted, pulling the first sealing stent **110** into the bottom of the cavity, where it lodges. With reference to **FIG. 11***f*, insertion catheter **111** is withdrawn until its distal end is near the top of cavity **24**, whereupon a second sealing stent **110** is deployed. Suture **112** is further retracted, pulling the second stent into the top of the cavity, where it lodges. The final step of the procedure is to disconnect the proximal part of the suture at point **119**.

[0124] **FIG. 12** depicts a valve adapted to seal paravalvular leaks in accordance with a preferred embodiment of the present invention. Valve **121** is held in holder stent **124** with sealing element **120** attached circumferentially around stent **124**'s outer surface. When valve **121** is implanted, sealing element **120** is expanded to seal any peripheral paravalvular leaks. Several means can be used to implement expansion of sealing element **120**. In the implementation shown in **FIG. 12**, sealing element **120** is inflated by operator application of syringe **123**, and it constitutes a balloon-like portion, made of a pliant physiologically acceptable polymeric material such as polyurethane. The inflation media can be saline solution, the patient's blood, or another physiologically acceptable fluid.

[0125] Alternatively, the sealing portion can be made of a material that, on contact with a fluid, soaks up the fluid and swells up. Once inserted into the body, the sealing portion comes into contact with the blood, causing it to swell and seal the cavity.

[0126] **FIGS. 13***a* to **13***d* depict a valve adapted to seal paravalvular leaks in accordance with another preferred embodiment of the present invention. **FIG. 13***a* depicts an implantable valve **124**. Stent **125** has a sealing component **126** connected to its inlet. Sealing component **126** is comprised of a plurality of flaps **127** and expands to a larger diameter than the principal diameter of the stent **125**, creating an extra sealing line to prevent paravalvular leaks. **FIG. 13***b* depicts a top view of valve **124**. Sealing component **126** comprises a plurality of flaps **127** that, independent of one another, are connected to the valve stent **125**. Each flap **127** is made of spring wire **131**, which, after the valve is deployed, causes flap **127** to extend out. Flaps **127** are covered with impermeable sealing material **128**. Flaps **127** are arranged such that they are substantially perpendicular to the longitudinal axis of stent **124** and overlap one another, ensuring a full seal.

[0127] **FIG. 13***c* shows stent-mounted valve **124** in its crimped configuration. Introducing sheath tube **130** holds stent **125** and sealing component **126** crimped on balloon **129**. After deployment, flaps **127** of sealing component **126** open to their final diameter.

[0128] **FIG. 13***d* shows a cross-section of a self-expanding sealing flap **127**. Stent strut **133** is attached to spring wire ring **131** by mechanical attachment means **134**, which can be a rivet, a screw, etc. Spring wire ring **131** can be folded into introducing sheath tube **130** shown in **FIG. 13***c* and, when released from tube **130**, springs back to its shape as shown in **FIG. 13***d*.

[0129] **FIG. 14** illustrates a valve adapted to seal paravalvular leaks in accordance with another preferred embodiment of the present invention. This design includes balloon-inflatable stent **140** (containing a prosthetic valve) and balloon-inflated sealing ring **145**, which is similar to sealing component **126** of **FIG. 13**, only here balloon-inflatable wire **145** is used instead of spring wire ring **131**. Stent **140** is inflated using a double balloon. First balloon section **142** inflates stent **140** to the desired diameter, and then second balloon section **143** inflates sealing flaps **145** perpendicular to stent **140**, creating a larger diameter and thus sealing any cavities around the stent.

[0130] **FIGS. 15***a* and **15***b* depict a valve adapted to seal paravalvular leaks in accordance with another preferred embodiment of the present invention. In this embodiment the sealing ring comprises flexible sealing elements **150**. Each sealing element **150** is independently spring-actuated. When the valve is crimped, sealing elements **150** fold, enabling valve to be reduced to a small diameter for insertion. When valve is expanded to its final diameter, sealing elements **150** open to a larger diameter **154** to seal cavities around the valve, preventing paravalvular leaks. Since each sealing element **150** is independent, sealing elements adjacent to native valve tissue **152** remain closed. These closed elements provide a further benefit of adding compressive forces that improve the anchoring of the valve.

[0131] **FIGS. 16***a* to **16***c* depict a valve adapted to seal paravalvular leaks in accordance with another preferred embodiment of the present invention. Here the sealing ring **165** comprises at least one of a plurality of flexible, self-expanding sealing elements **165** connected to the outer surface of stent **160**. Similar to the embodiment shown in **FIG. 15**, when stent **160** is pressed against the native tissue, sealing element **165** will stay compressed against the wall. But where there is a gap between stent **160** and the surrounding tissue, sealing element **165** will expand and block any possible leak. With reference to **FIG. 16***b*, sealing element **165** is made of self-expanding mesh **166** covered with PET (polyethylene terephthalate) mesh **167** or other impermeable material.

[0132] **FIGS. 17***a* to **17***e* depict a valve adapted to seal paravalvular leaks in accordance with another preferred embodiment of the present invention, wherein the sealing component is built into a ring **172** of the stent struts. In the figure the ring of struts **172** is located at the stent's inlet; however, the ring of struts can equally be implemented at another point along the stent. The modified struts **173** comprising ring of struts **172** are designed so that they are geometrically constrained such that, upon expansion of the stent from crimped state (**FIG. 17***a*) to expanded state (**FIG. 17***b*), ring of struts **172** bend to a final diameter **169** substantially larger than the final diameter **168** of the rest of the expanded stent, thereby sealing paravalvular cavities and associate leaks.

[0133] **FIGS. 17***c* and **17***d* show front and side views of the geometrical restriction in modified strut **173** that causes the displacement of point **175**, creating enlarged diameter **169**. **FIG. 17***c* shows modified strut **173** before stent expansion and in line with the rest of the stent wall. **FIG. 17***d* shows modified strut **173** after stent expansion, which has caused modified strut **173** to rise up and out, creating the sealing ring. **FIG. 17***e* details the operation of the geometric restriction: when stent **170** is crimped, the strut legs are relatively close to each other **176**, making strut height relatively large **177**. After expansion, the strut legs are spaced further apart **176***a*, leading to displacement of point **175**, and lessening of strut height **177***a*. The result of the movement of point **175** is shown in **FIGS. 17***c*, **17***d*, and **17***e*. When the stent is crimped, as shown in **FIG. 17***c* and the left side of **FIG. 17***e*, point **175** is low. When the stent is expanded, as shown in the right side of **FIG. 17***e*, point **175** moves up, pulling the stent to the shape shown in **17***d*.

[0134] **FIGS. 18***a* to **18***e* depict a valve adapted to include means for sealing paravalvular leaks in accordance with another preferred embodiment of the present invention. In **FIG. 18***a* percutaneous valve **180** crimped on balloon **182** is shown being advanced toward the stenotic aortic valve **175**. At least one of a plurality of sutures **181** are connected to

valve **180** at inlet end **187**. The sutures spread back along the balloon's shaft **183** and continue back along the deployment path and out of the patient's body as shown in **FIG. 18***b*.

[**0135**] Inflating balloon **183**, as shown in **FIG. 18***c*, anchors valve **185** in annulus **179** with sutures **181** arranged around it. In cases where paravalvular cavities **178** are present, it is possible to repair them assisted by sutures **181**. **FIG. 18***d* shows a patch **189** made of pericardium (or other suitable patch material) inserted on sutures **181** and pushed to the leaking cavity by means of a pushing catheter **190**. After the patch is in place, a knot or clip **191** is used to secure it, thereby repairing the leak (**18***e*).

[**0136**] **FIGS. 19***a* to **19***d* depict a valve adapted to include means for sealing paravalvular leaks in accordance with another preferred embodiment of the present invention. First elastic sealing stent **195** is inserted in the desired location. Then, valve **196** is inserted into sealing stent **195**. **FIG. 19***a* shows inserting catheter **191** with sealing stent **195** and valve **196** mounted on it. Sealing stent **195** and valve **196** can be either balloon inflated as shown in this figure, or self-expanding which would then require an introducing sheath.

[**0137**] **FIG. 19***b* shows the two stents placed in the native aortic valve. Sealing stent **195** compensates for irregular shapes, while the stented valve **196**, which is mounted inside sealing stent **195**, can be absolutely round. Sealing stent **195** is able to avoid leaks caused by cavities or irregularities caused by pieces of calcification as described earlier in this patent. The sealing component of sealing stent **195** can be self-expandable hydrophilic sponge **197** (**FIG. 19***c*) or other suitable material. Sealing stent **195** can include hooks **198** that open when the stent is inserted, improving the anchoring of the stent in the annulus as well as improving sealing around the stent by blocking blood (**FIG. 19***d*).

[**0138**] The preceding specific embodiments are illustrative of the practice of the invention. It is to be understood, however, that other expedients known to those skilled in the art or disclosed herein, may be employed without departing from the spirit of the invention or the scope of the appended claims.

**1**. A catheter-delivered device for locating cavities occurring between a prosthetic valve and the wall of the body vessel where the valve is implanted, the cavities producing paravalvular leaks during diastole, the device comprising at least one of a plurality of flexible wires, the wire having attached to it a balloon, wherein the balloon is pulled by the leak through the cavity and wherein the wire then serves to mark the cavity location.

**2**. The device of claim 1 further comprising a spacing element to maintain the wires adjacent to the wall of the body vessel.

**3**. A catheter-delivered stent for sealing cavities occurring between a prosthetic valve and the wall of the body vessel where the valve is implanted, the cavities producing paravalvular leaks during diastole, the stent delivered via guide wire to the cavity, held in place in the cavity by friction, and comprising a support structure and an impermeable membrane, the membrane preventing the passage of fluids through the stent, thereby sealing the cavity.

**4**. The device of claim 3, wherein the sealing stent is balloon-expandable type and the membrane comprises a tab spring-hinged to the inside of the stent lumen and sized to occlude the lumen when closed, the tab being held open by the stent balloon during insertion and springing closed when the balloon is removed after the stent is expanded.

**5**. The device of claim 3, wherein the sealing stent is self-expandable, wherein the membrane is a material covering at least one end of the stent.

**6**. The device of claim 5, wherein the stent is comprised of shape memory material.

**7**. The device of claim 6, wherein the material is nitinol.

**8**. The device of claim 5 further covered on its external walls with hooks comprised of shape memory material and which extend, upon insertion of the stent, into adjacent body vessel walls.

**9**. The device of claim 3, wherein the distal end of the stent-delivery catheter is substantially perpendicular to the wall of the vessel at a point inside the cavity and the stent guidewire terminates in an anchoring mechanism that is inserted through the catheter and into the vessel wall, anchoring itself in the vessel wall and providing greater anchorage for the stent.

**10**. The device of claim 9, wherein the anchoring mechanism is a hook comprised of shape memory material that is compressed for catheter delivery into the vessel wall whereupon the hook extends out, anchoring the guide wire into the vessel wall.

**11**. The device of claim 10, wherein the anchoring mechanism is a threaded point that is threaded into the vessel wall anchoring the guide wire into the vessel wall.

**12**. A device for sealing cavities occurring between a prosthetic valve and the wall of the body vessel where the valve is implanted, the cavities producing paravalvular leaks during diastole, the device comprising a first guidewire threaded through the cavity, a second guidewire slidably coupled to the first wire and inserted such that the slidable coupling is moved to a point in the cavity, a first catheter inserted over the first guidewire to the point in the cavity, a second catheter inserted over the second guidewire to the point in the cavity, a first component of a two-component biological adhesive inserted through the first catheter to the point, a second component of the two-component adhesive inserted through the second catheter to the point, and the two components thereby mixing to form a plug that seals the cavity.

**13**. The device of claim 12 adapted to apply an adhesive with more than two components.

**14**. The device of claim 12, wherein, instead of two guidewires and two catheters, a single catheter and guidewire are used for delivery, with the catheter comprising two lumens, each lumen providing delivery for one of the two-component adhesive components, the catheter terminating in a mixer that forces the components to mix when the exit the catheter in the cavity, thereby creating the plug that seals the cavity.

**15**. The device of claim 12, wherein, instead of two-component adhesive components being delivered via the catheters, a radiation-cured adhesive is delivered via one of the catheters and a radiation source is delivered via the other catheter, wherein the radiation source is applied to the adhesive to create the plug in the cavity.

**16**. A catheter-delivered assembly for sealing cavities occurring between a prosthetic valve and the wall of the body vessel where the valve is implanted, the cavities producing paravalvular leaks during diastole, the assembly delivered via guidewire to the cavity and comprising two

sealing stents connected by a suture, the suture running back up the catheter, the sealing stents comprising a stent structure and sealing membrane, one stent of the assembly inserted underneath the cavity and the other stent inserted inside the cavity, the membranes preventing the passage of fluids through the stent, thereby sealing the cavity and each stent helping anchor the other in place.

**17**. A prosthetic valve with integrated sealing ring attached to the outside wall, the ring having a circumference greater than that of the valve and elastically conforming to seal cavities between the valve and the wall of the body vessel where the valve is implanted, the cavities producing paravalvular leaks during diastole.

**18**. The device of claim 17, wherein the ring comprises a balloon.

**19**. The device of claim 17, wherein the ring comprises a plurality of spring-wire tabs mounted adjacent to one another around the circumference of the valve and covered with an impermeable membrane and wherein the tabs are folded against the body of the valve during catheter delivery and where, upon egress from the catheter, the tabs spring out to form the sealing ring.

**20**. The device of claim 17, wherein the ring comprises a plurality of impermeable tabs mounted adjacent to one another around the circumference of the valve, and further comprising a balloon under the tabs and wherein the tabs are folded down on the deflated balloon during catheter delivery and wherein, upon egress from the catheter, the balloon is inflated, thereby opening the tabs to form the sealing ring.

**21**. The device of claim 17, wherein the ring comprises a plurality of impermeable tabs mounted adjacent to one another around the circumference of the valve, each tab spring-hinged to the valve and wherein the tabs are folded against the body of the valve during catheter delivery and wherein, upon egress from the catheter, the tabs spring out to form the sealing ring.

**22**. The device of claim 17, wherein the ring comprises at least one of a plurality of flexible, self-expanding sealing elements comprised of self-expanding mesh covered with an impermeable membrane.

**23**. The device of claim 17, wherein the ring comprises at least one of a plurality of flexible, self-expanding sealing elements comprised of self-expanding mesh covered with an impermeable membrane.

**24**. The device of claim 17, wherein the sealing ring comprises modified struts of the stent, the modification comprising geometrical constraints that, upon expansion of the stent, cause the struts to bend out from the stent body, thereby creating the sealing ring.

**25**. A prosthetic valve with integrated sealing means, the sealing means comprising sutures attached around the perimeter of the valve and extending back out of the body and wherein patches can be pushed down the sutures and attached to the point where the suture is attached to the valve, thereby sealing any cavity existing between the valve and the wall of the body vessel where the valve is implanted, the cavities producing paravalvular leaks during diastole.

**26**. A catheter-delivered prosthetic valve with integrated sealing means, the sealing means comprising an elastic stent that is first deployed and inside which the valve is deployed, the elastic stent sealing any cavity existing between the valve and the wall of the body vessel where the valve is implanted, the cavities producing paravalvular leaks during diastole.

**27**. A method for locating cavities between an implanted prosthetic valve and the wall of the body vessel where the valve is implanted, the cavities producing paravalvular leaks during diastole, the method comprising:

inserting a balloon mounted on a flexible wire next to the valve;

wherein the balloon is pulled by the leak through the cavity and wherein the wire then serves to mark the cavity location.

**28**. A method for sealing cavities between an implanted prosthetic valve and the wall of the body vessel where the valve is implanted, the cavities producing paravalvular leaks during diastole, the method comprising:

inserting an impermeable stent into the cavity,

whereby the stent seals the cavity.

**29**. A method for sealing cavities between an implanted prosthetic valve and the wall of the body vessel where the valve is implanted, the cavities producing paravalvular leaks during diastole, the method comprising:

inserting a first guidewire into the cavity;

running a loop attached to a second guidewire over the first guide wire to a point inside the cavity;

injecting one component of a two-component adhesive through a catheter over the first guidewire to the cavity; and

injecting the second component of the two-component adhesive through a catheter over the second guide wire to the cavity,

wherein the components combine to create an adhesive plug that seals the cavity.

**30**. The method of claim 29, wherein instead of the first adhesive component, a radiation-cured adhesive is injected and instead of the second adhesive component a radiation source is applied, thereby creating the adhesive plug.

**31**. The method of claim 29 where only one guidewire is used and the two components are inserted via separate lumens within a single catheter over the guidewire.

**32**. A method for providing integrated sealing capability in an implanted prosthetic valve and the wall of the body vessel where the valve is implanted, the cavities producing paravalvular leaks during diastole, the method comprising:

providing an expandable elastic ring around the outside of the valve; and

expanding the ring;

whereby the ring seals any cavities.

**33**. A method for sealing cavities between an implanted prosthetic valve and the wall of the body vessel where the valve is implanted, the cavities producing paravalvular leaks during diastole, the method comprising:

inserting a sealing stent at the distal end of the cavity; and

inserting a second sealing stent attached to the first stent into the cavity.

* * * * *