US005332965A

United States Patent [19]

Wolf et al.

[11] Patent Number: 5,332,965

[45] Date of Patent: Jul. 26, 1994

[54] CONTACTLESS LINEAR ANGULAR POSITION SENSOR HAVING AN ADJUSTABLE FLUX CONCENTRATOR FOR SENSITIVITY ADJUSTMENT AND TEMPERATURE COMPENSATION

[75] Inventors: **Ronald J. Wolf**, Goshen; **Larry Hedeen**, Howe, both of Ind.

[73] Assignee: **Durakool Incorporated**, Elkhart, Ind.

[21] Appl. No.: **902,075**

[22] Filed: **Jun. 22, 1992**

[51] **Int. Cl.**[5] **G01B 7/14**; G01R 35/00

[52] **U.S. Cl.** **324/207.12**; 324/207.2; 324/207.25; 324/202; 324/225

[58] **Field of Search** 324/202, 207.12, 207.2, 324/207.21, 207.22, 207.25, 225, 173, 174, 235

[56] **References Cited**

U.S. PATENT DOCUMENTS

2,942,177	6/1960	Neumann et al. .	
2,992,369	7/1961	LaRocca .	
3,060,370	10/1962	Varterasian .	
3,112,464	11/1963	Ratajski et al. .	
3,118,108	1/1964	Zoss et al. .	
3,185,920	5/1965	Brunner .	
3,473,109	10/1969	Maaz et al. .	
3,482,163	12/1969	Peek et al. .	
3,818,292	6/1974	Berman .	
3,988,710	10/1976	Sidor et al. .	
4,066,962	1/1978	Jaffe .	
4,086,533	4/1978	Ricouard et al. .	
4,107,604	8/1978	Bernier .	
4,156,191	5/1979	Knight et al. .	
4,293,837	10/1981	Jaffe et al. .	
4,392,375	7/1983	Eguchi et al. .	
4,570,118	2/1986	Tomczak et al. .	
4,731,579	3/1988	Petersen et al. .	
4,829,248	5/1989	Loubier .	
4,857,842	8/1989	Sturman et al.	324/207.2
4,893,502	1/1990	Kubota et al. .	
4,922,197	5/1990	Juds et al.	324/207.12
4,970,463	11/1990	Wolf et al. .	
5,087,879	2/1992	Sugifune et al.	324/207.12

FOREIGN PATENT DOCUMENTS

0053938	6/1982	European Pat. Off. .
56-107119	8/1981	Japan .
1416925	12/1975	United Kingdom .

Primary Examiner—Walter E. Snow

Attorney, Agent, or Firm—Fitch, Even, Tabin & Flannery

[57] **ABSTRACT**

An angular position sensor for sensing the angular position of a pivotally mounted device includes a magnetically sensitive device, such as a Hall effect IC, and a plurality of flux concentrators, rigidly disposed relative to the Hall effect IC, forming an assembly. The assembly is disposed in a housing a fixed distance from a rotatably mounted standard magnet defining a fixed air gap therebetween. The magnet is disposed in rotatably mounted magnet holder which also acts as a drive arm that is adapted to be mechanically coupled to a pivotally mounted device. The configuration of the flux concentrators assembled to the magnetically sensitive device cause the output of the Hall effect IC to be generally linear. In order to avoid problems associated with electrically adjustable angular position sensors, the angular position sensor in accordance with the present invention is adjusted mechanically. In particular, a flux concentrator, preferably having a halo shape, is disposed adjacent the magnet. The sensor is calibrated by varying the distance between the halo-shaped flux concentrator and the magnet. In one embodiment of the invention, the halo-shaped flux concentrator is formed to provide temperature compensation for the sensor. The sensor is hermetically sealed and is thus unaffected by wear or vibration.

6 Claims, 5 Drawing Sheets

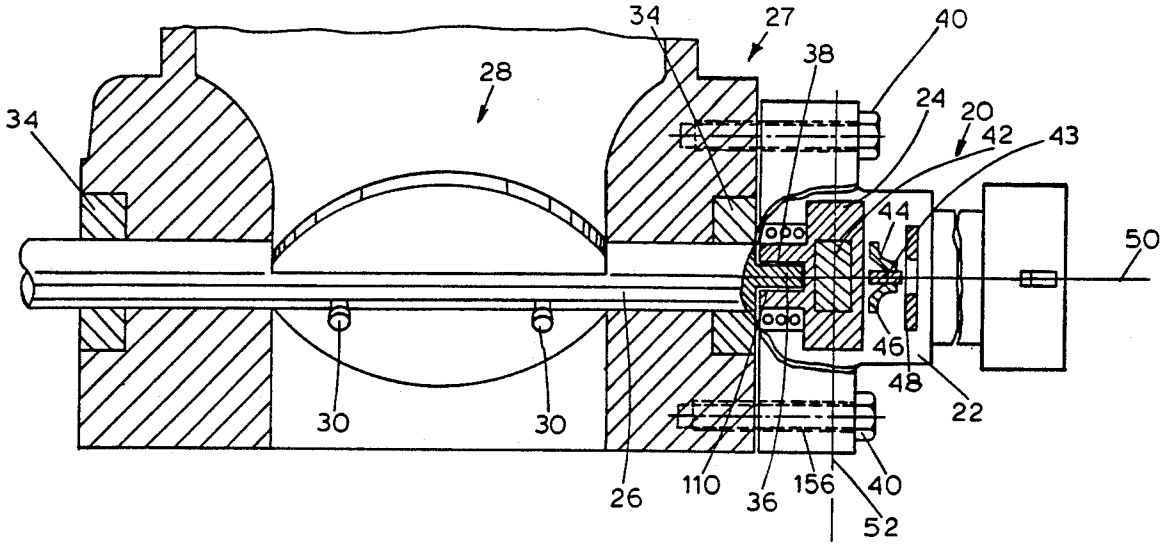

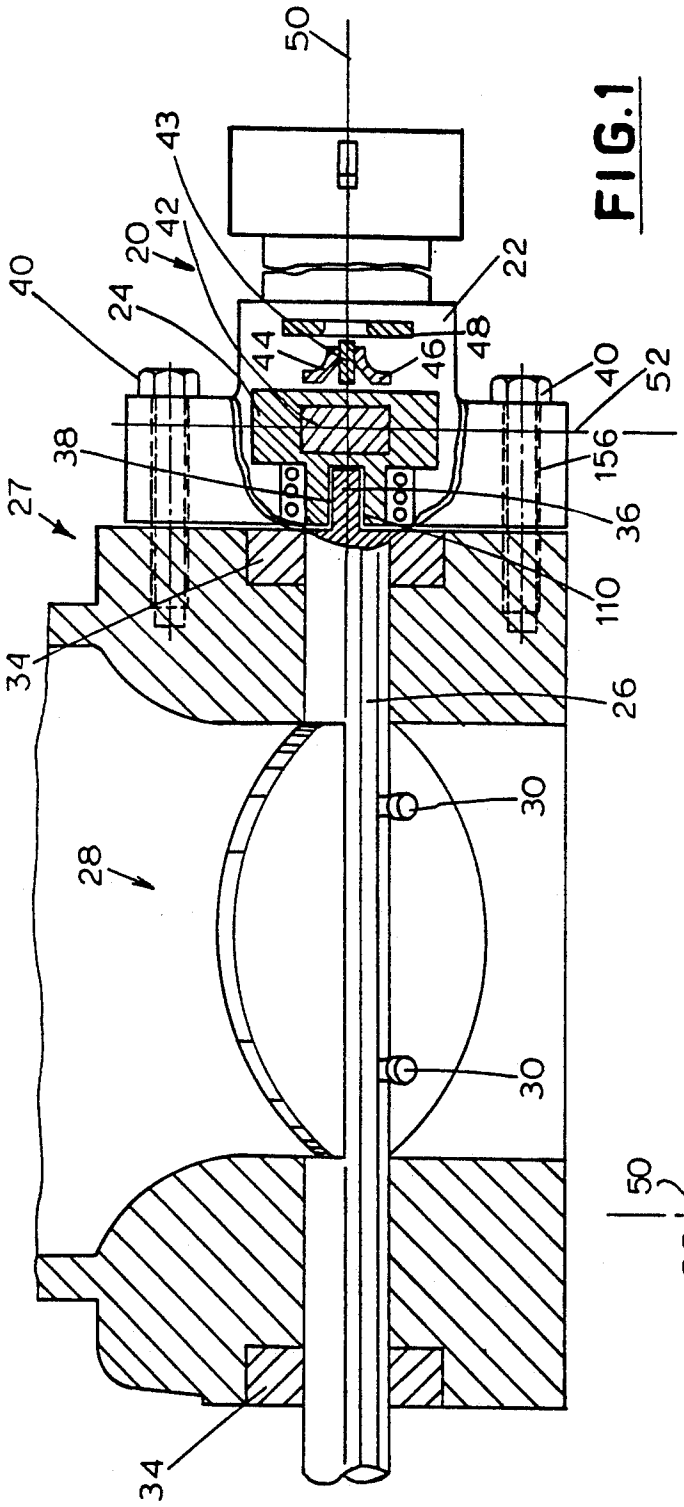

FIG.1

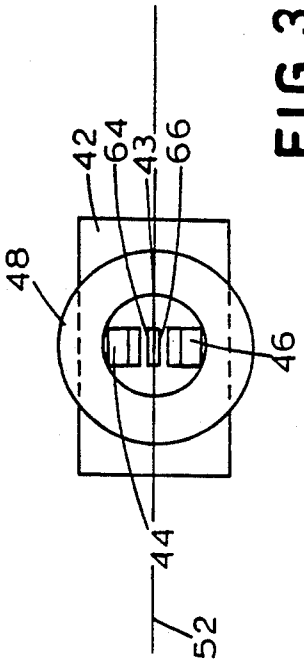

FIG.3

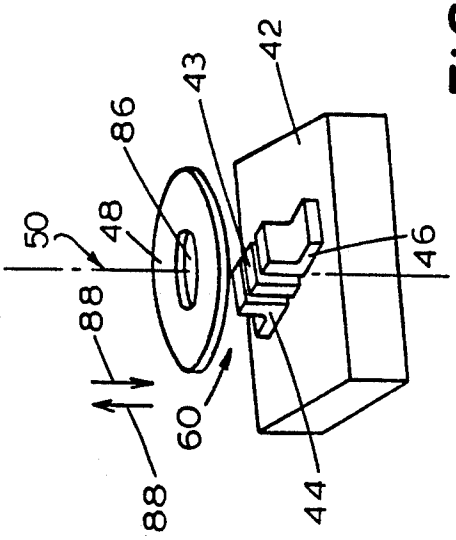

FIG.2

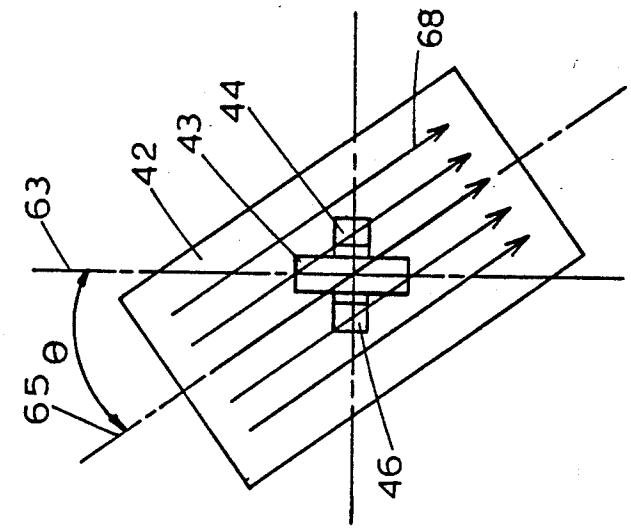

FIG.6

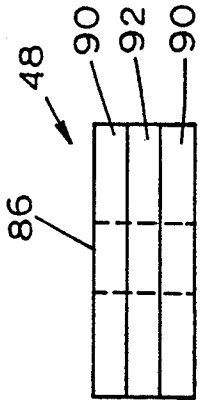

FIG.10

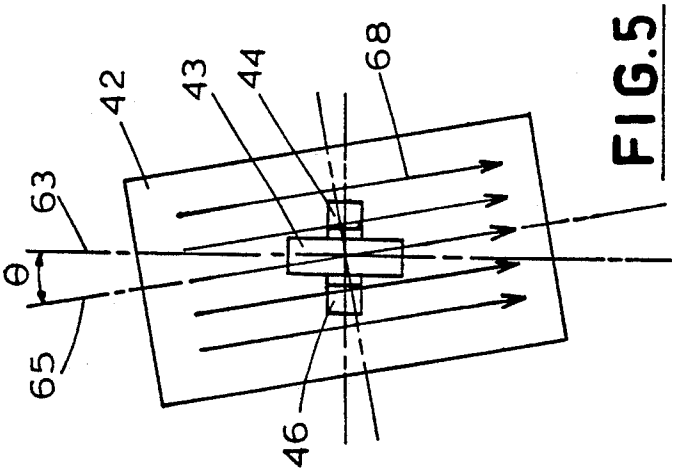

FIG.5

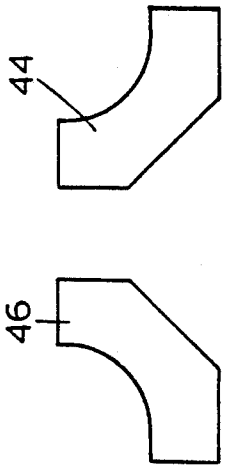

FIG. 9

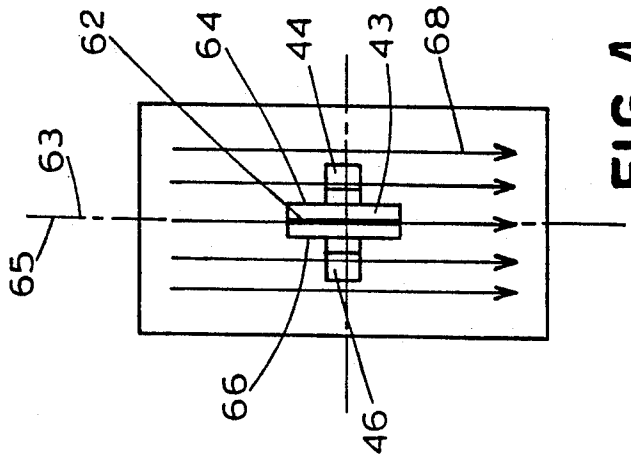

FIG.4

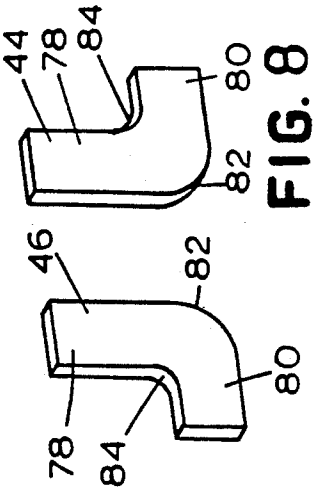

FIG. 8

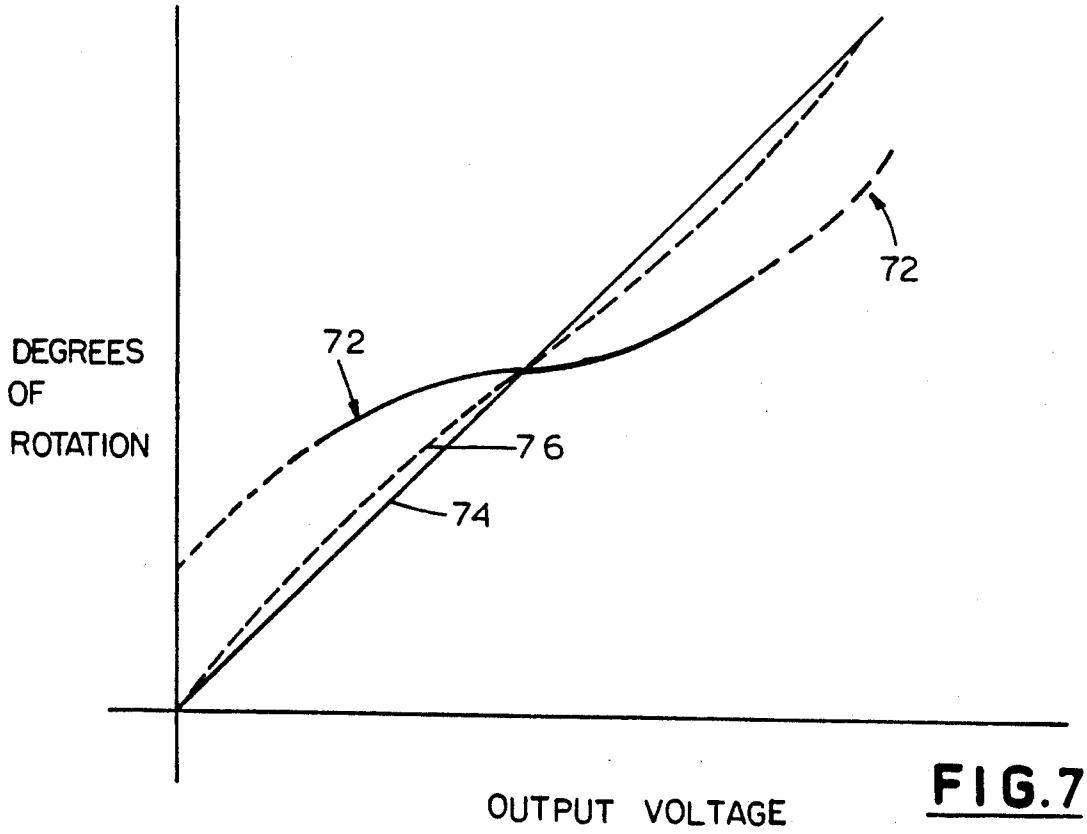
DEGREES
OF
ROTATION
72
72
76
74
OUTPUT VOLTAGE

FIG.7

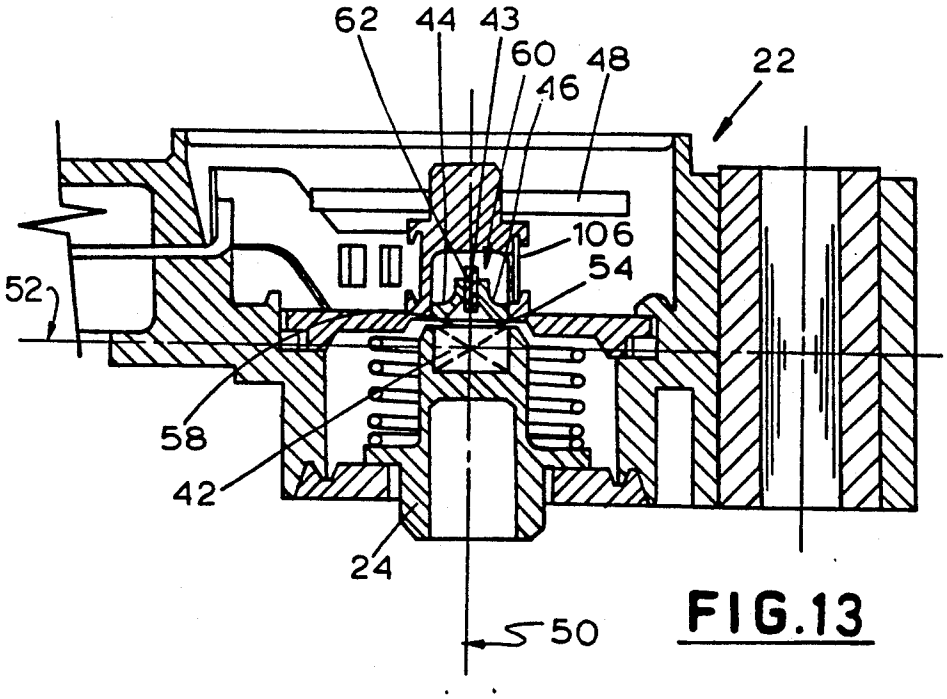
62
44
43
60
48
46
22
106
54
52
58
42
24
50

FIG.13

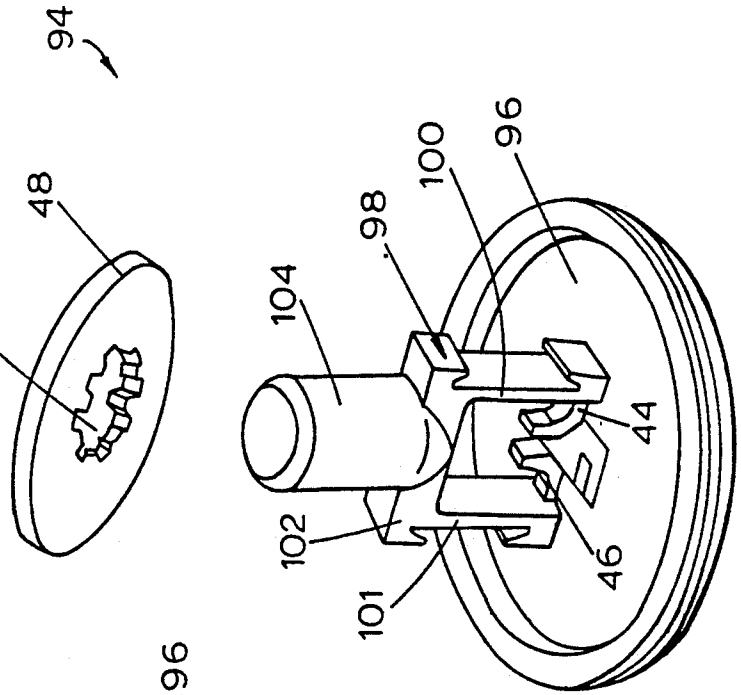
94
48
86
104
98
100
96
44
46
102
101

FIG.11

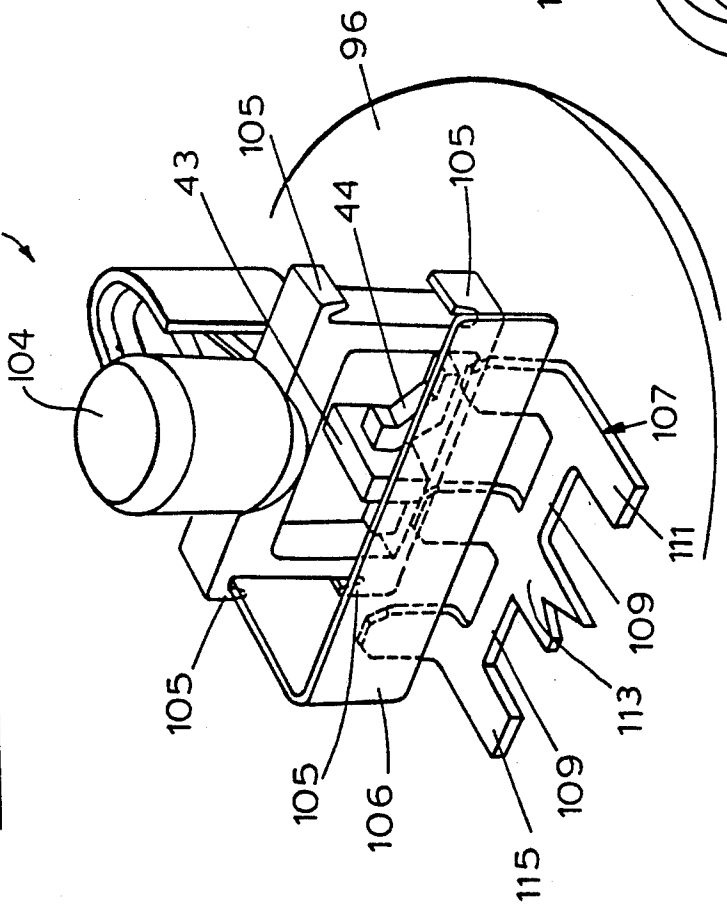
94
104
43
105
44
96
105
107
111
109
113
109
115
106
105
105

FIG.12

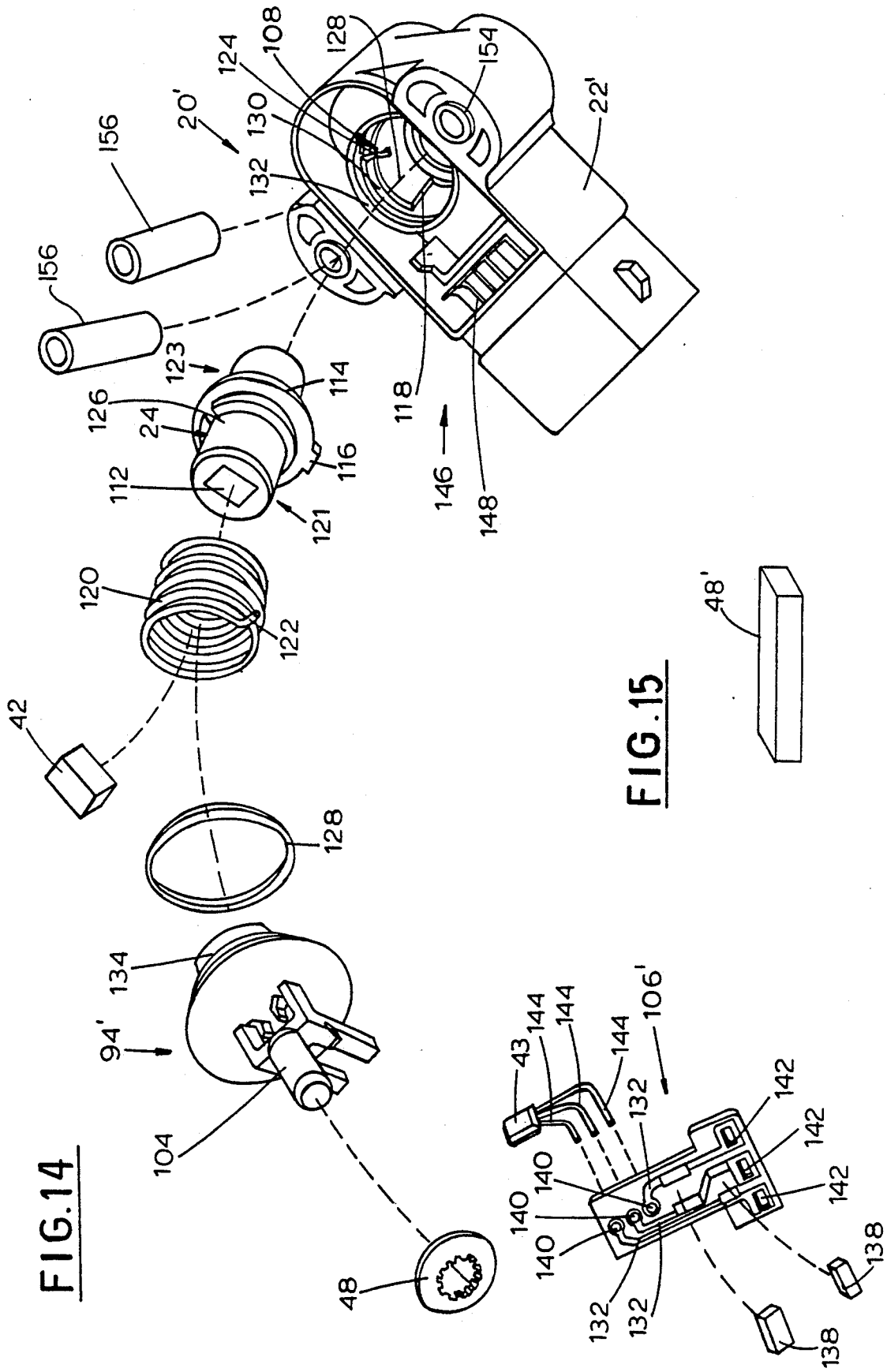
20'
22'
24
42
43
48
48'
94'
104
106'
108
112
114
116
118
120
121
122
123
124
126
128
130
132
134
138
140
142
144
146
148
154
156

FIG.14

FIG.15

CONTACTLESS LINEAR ANGULAR POSITION SENSOR HAVING AN ADJUSTABLE FLUX CONCENTRATOR FOR SENSITIVITY ADJUSTMENT AND TEMPERATURE COMPENSATION

BACKGROUND OF THE INVENTION

1. Field of the Invention

The present invention relates to an angular position sensor and more particularly to a linear non-contact angular position sensor for sensing the angular position of a pivotally mounted device, such as a throttle valve, which includes a magnetic sensing element, such as a Hall effect integrated circuit (IC) and a mechanical adjustment mechanism which includes integral temperature compensation that allows the sensitivity of the sensor to be adjusted without the need for potentiometers and the like to provide a generally linear output signal as a function of the angular position of the sensor over a relatively wide temperature range.

2. Description of the Prior Art

Angular position sensors are known to be used for various purposes including throttle position sensors for determining the angular position of a butterfly valve in a throttle body. An example of such a sensor is disclosed in U.S. Pat. No. 4,893,502. Such sensors are generally used to sense the angular position of the butterfly valve in the throttle body in order to control the amount of fuel applied to the combustion chamber of an internal combustion engine.

Various sensors for monitoring the angular position of a pivotally mounted device, such as a butterfly valve, are known. For example, various contact type sensors, such as electromechanical potentiometers are known. Such electromechanical potentiometers include an arcuately-shaped thick film resistive ink resistor and a movably mounted precious metal electrical wiper that is adapted to be mechanically coupled to a butterfly valve such that the relative position of the wiper relative to the resistor varies in accordance with the angular position of the butterfly valve. Such sensors are used to provide an electrical signal which varies as a function of the angular position of the butterfly valve.

There are various known problems with such sensors. For example, such sensors cannot be hermetically sealed due to the dynamic seal required between the butterfly valve shaft and the wiper inside the sensor housing. As is known in the art such dynamic seals are subject to wear over time and thus, can result in degraded sensor performance in time. As such, when such sensors are used in a relatively hostile environment, such as an under-hood environment, dirt, moisture and chemical fumes are known to ingress into the sensor housing and cause degradation and erratic operation of the sensor.

Some known sensors, such as the sensor disclosed in U.S. Pat. No. 4,893,502, avoid the problem of dynamic seals. More particularly, the '502 patent discloses a modified throttle body which incorporates the sensor therewithin. In order to provide access to the sensor, the throttle body is open on one end. The opening is closed by a cover that is secured to the throttle body by way of a plurality of fasteners forming a static seal. However, there are known problems with such static seals. For example, due to the vibration of an internal

combustion engine, the fasteners may loosen over time, thus degrading the static seal and, in turn, the sensor.

Another problem with contact type sensors is that they are subject to wear. In particular, the wipers are known to move back and forth in contact across the thick film resistor a relatively large number of times over the expected lifetime of the sensor; perhaps millions of time. Such moving contact causes localized reductions of the thickness of the thick film resistor. Since resistance is a function of cross-sectional area, the reduction of the resistor thickness will change the local resistance value in the portion of the resistor which experiences the greatest amount of wear. As such, this causes drift of the output over time which affects the calibration and linearity of the sensor.

There are other problems with such contact sensors. For example, in some situations, for instance when the engine is run at a nearly constant speed, engine induced vibration can cause additional localized resistor wear, which, as discussed above, can affect the calibration and linear output of the sensor.

In an attempt to overcome the problems associated with such contact type angular position sensors, non-contact sensors have been developed. Moreover, due to the relatively hostile environment of an internal combustion engine, various magnetic sensors have been developed. For example, U.S. Pat. Nos. 3,118,108; 4,392,375 and 4,570,118 disclose magnetic angular position sensors which include two magnets and a magnetically sensitive device, such as a Hall effect device or a magneto-resistor.

However, there are various known problems with such sensors which utilize two magnets. For example, such sensors are relatively more expensive than sensors which utilize a single magnet. Also, calibration of such sensors is relatively difficult. In particular, conventionally available magnets are generally provided in quantity with tolerance ranges of about ten percent. A second magnet doubles the range of potential variability and thus makes calibration relatively more difficult.

Other known angular position sensors avoid the problems of two magnet sensors and utilize a single magnet and a magnetically sensitive device, such as a Hall effect device, for example, as disclosed in U.S. Pat. Nos. 3,818,292; 3,112,464; 4,893,502 and 4,570,118. Such single magnet angular position sensors rely on a varying air gap to vary the magnetic flux density applied to the Hall effect device in response to angular motion. However, the varying air gap of such sensors causes the output signal of the sensor to be exponential and thus relatively non-linear. In order to linearize the response, the magnets utilized with such sensors have been known to be formed from irregular shapes by various known foundry casting methods. However, such cast magnets are known to be rough having imperfections in their surfaces which contribute to part-to-part variation. The process for removing such imperfections is relatively time-consuming and thus adds significantly to the overall cost of the sensor.

Other known single magnet angular position sensors with a varying air gap utilize irregular-shaped magnet holders for skewing the position of the magnet relative to the rotational axis and the Hall effect element. Such irregular-shaped magnet holders add to the overall cost of the sensor and also make the sensor relatively difficult to calibrate.

Angular position sensors which utilize a single magnet and a non-varying air gap are also known, for exam-

ple, as disclosed in U.S. Pat. No. 4,893,502. The angular position sensor disclosed therein includes a single magnet and a magnetic resistance element (MRE). In this embodiment, a circular magnet is rigidly secured directly to the butterfly valve shaft. The MRE is disposed within a modified throttle body at a fixed air gap relative to the circular magnet. An amplifying circuit with variable gain is used to calibrate the sensors by way of potentiometers or variable resistors. As is known in the art, the output of such potentiometers may vary with temperature or time. Due to the relatively wide operating temperature range of such a sensor in an internal combustion environment, for example, such potentiometers will drift and affect the overall calibration of the device. Another problem with such an arrangement is that the electrical connection between such a potentiometer and the amplifier circuit is known to be made by relatively large macro-scale electrical tracings on a printed circuit board which would be physically large enough to act as an antenna, thus making the circuit relatively susceptible to electromagnetic interference (EMI) and especially radio frequency interference (RFI). As such, the amplifying circuitry would have to be shielded which adds to the cost of the sensor.

SUMMARY OF THE INVENTION

It is an object of the present invention to solve various known problems associated with angular position sensors.

It is yet another object of the present invention to provide a non-contact angular position sensor.

It is yet a further object of the present invention to provide an angular position sensor that utilizes a single magnet.

It is yet a further object of the present invention to provide an angular position sensor that utilizes a fixed air gap.

It is yet another object of the present invention to provide an angular position sensor that provides a generally linear output over a relatively wide temperature range.

It is yet a further object of the present invention to provide an angular position sensor that is mechanically adjustable.

It is yet a further object of the present invention to provide an angular position sensor with self-temperature compensation.

It is yet another object of the present invention to provide a hermetic seal for an angular position sensor that is virtually unaffected by wear or vibration.

Briefly, the present invention relates to an angular position sensor for sensing the angular position of a pivotally mounted device. The angular position sensor in accordance with the present invention is hermetically sealed and thus, is virtually unaffected by wear or vibration, and includes a magnetically sensitive device, such as a Hall effect IC, a plurality of flux concentrators, rigidly disposed relative to the Hall effect IC, forming an assembly. The assembly is disposed in a housing a fixed distance from a rotatably mounted standard magnet defining a fixed air gap therebetween. The magnet is disposed in rotatably mounted magnet holder which also acts as a drive arm that is adapted to be mechanically coupled to a rotatably mounted device. The configuration of the flux concentrators assembled to the magnetically sensitive device cause the output of the Hall effect IC to be generally linear. In order to avoid problems associated with electrically adjustable angular position sensors, the angular position sensor in accordance with the present invention is adjusted mechanically. In particular, an additional flux concentrator, preferably having a halo shape, is disposed adjacent the magnet. The sensitivity of the sensor is adjusted by varying the distance between the additional flux concentrator and the magnet. In one embodiment of the invention, the halo-shaped flux concentrator is formed to provide temperature compensation for the sensor.

BRIEF DESCRIPTION OF THE DRAWING

These and other objects of the present invention will be readily understood with reference to the specification and the following drawings, wherein:

FIG. **1** is a sectional view, partially broken away, of a throttle body with an angular position sensor in accordance with the present invention attached thereto;

FIG. **2** is a simplified perspective view of the angular position sensor in accordance with the present invention;

FIG. **3** is a plan view of the angular position sensor illustrated in FIG. **2**;

FIG. **4** is a simplified plan view of the angular position sensor in accordance with the present invention illustrating the relationship between the angular position sensor and the magnetic flux in a static position;

FIGS. **5** and **6** are similar to FIG. **4** and illustrate the relationship between the angular position sensor and the magnetic flux in various operating positions;

FIG. **7** is an exemplary graph illustrating the relationship between the output voltage of the angular position sensor versus degrees of rotation shown in dotted line with a superimposed curve which illustrates the effects of the flux concentrators in accordance with the present invention;

FIG. **8** is a perspective view of a pair of flux concentrators which form a portion of the present invention;

FIG. **9** is an elevational view of an alternate embodiment of the flux concentrators illustrated in FIG. **8**;

FIG. **10** is an elevational view of a halo-shaped flux concentrator which forms a portion of the present invention;

FIG. **11** is a perspective view of one embodiment of a carrier assembly in accordance with the present invention, shown with a flux concentrator removed;

FIG. **12** is a perspective view of the assembly illustrated in FIG. **11** in a further stage of development;

FIG. **13** is a cross-sectional view of an angular position sensor incorporating the carrier assembly illustrated in FIGS. **11** and **12**; and

FIG. **14** is an exploded perspective view of an alternate embodiment of the angular position sensor in accordance with the present invention.

FIG. **15** is a perspective view of a flux concentrator in accordance with the present invention.

DETAILED DESCRIPTION OF THE PREFERRED EMBODIMENT

The angular position sensor in accordance with the present invention is generally identified with the reference numeral **20**. An important aspect of the invention relates to the method for adjustment. In particular, the angular position sensor **20** is adapted to be adjusted mechanically which eliminates the need for potentiometers and the like that are used to calibrate known angular position sensors, such as the angular position sensor disclosed in U.S. Pat. No. 4,893,502. As discussed above, such potentiometers and the like are temperature

dependent. Thus, in relatively hostile temperature environments, the calibration of such sensors is affected.

As will be appreciated by those of ordinary skill in the art, the angular position sensor **20** is adapted to be used in various applications for providing a signal representative of the angular position of a pivotally mounted device. The angular position sensor **20** is illustrated and discussed below in an application as a throttle position sensor. However, it should be appreciated by those of ordinary skill in the art that the application of the angular position sensor **20** in accordance with the present invention is also useful for various other applications.

With reference to FIG. **1**, the angular position sensor **20** is disposed in its own housing **22** and includes a drive arm **24**, rotatably mounted relative to the housing **22**, that enables the sensor **20** to be mechanically coupled to an output shaft of a pivotally mounted device. In an application, such as a throttle position sensor, the drive arm **24** is mechanically coupled to a butterfly valve shaft **26** carried by a throttle body **27**. More particularly, in such an application, a butterfly valve **28** is rigidly affixed to the rotatably mounted shaft **26** with suitable fasteners **30** or by spot welding. The shaft **26** is rotatably mounted relative to a throttle body **27** with suitable bearings **34**.

The butterfly valve **28** is formed to close or throttle the air flow to an internal combustion engine (not shown). By coupling the angular position sensor **20** to the butterfly valve shaft **26**, the angular position sensor **20** is adapted to provide a signal representative of the angular position of the butterfly valve **28** for use in controlling the amount of fuel applied to the combustion chamber in an internal combustion engine.

It is contemplated that the shaft **26** and the drive arm **24** be prevented from rotating relative to each other. Various means can be used for preventing such rotation; all of which are intended to be included within the broad scope of the invention. As shown, the butterfly valve shaft **26** is formed with a reduced cross-sectional area portion or tongue **36** which extends outwardly from one side of a throttle body **27** to allow engagement with the drive arm **24**. In order to prevent the rotation of the tongue **36** relative to the drive arm **24**, the tongue **36** may be formed with a non-circular cross-section that is adapted to mate with a cooperating recess **38** formed in the drive arm **24**.

Another important aspect of the angular position sensor **20** is that it is formed as a separate unit that is adapted to rather quickly and easily be secured to, for example, the throttle body **27** by way of suitable fasteners **40**. By providing the angular position sensor **20** as a separate unit, the calibration of the sensor **20** can be done at the factory by the sensor manufacturer. In contrast, some known angular position sensors are incorporated directly into the throttle body, for example, as disclosed in U.S. Pat. No. 4,893,502. In such an embodiment, calibration of the sensor is normally done by the throttle body manufacturer whose experience with such sensors is admittedly less than the sensor manufacturer.

FIGS. **2** and **3** illustrate the basic principals of the angular position sensor **20** in accordance with the present invention. In particular, the angular position sensor **20** includes a magnet **42**, preferably a standard bar-shaped magnet defining opposing North and South magnetic poles, a magnetic sensing element **43**, a pair of generally L-shaped flux concentrators **44** and **46** and an additional flux concentrator **48**, used for adjustment. As will be discussed in more detail below, the magnet **42** is adapted to be mounted in the drive arm **24** for rotation about an axis **50** (FIG. **1**) that is generally perpendicular to a magnetic axis **52** which interconnects the opposing North and South magnetic poles, as shown in FIG. **1**. As will be discussed in more detail below, the magnet **42** is mounted within the drive arm **24** such that the axis of rotation **50** of the magnet is coaxial with the butterfly valve shaft **26** and generally perpendicular to the magnetic axis **52** such that rotation of the butterfly valve shaft **26** causes rotation of the magnet **42** about the axis **50** by a corresponding amount.

The magnetic sensing element **43** is preferably a Hall effect IC with on-chip amplifier circuits, for example, an Allegro Model No. 3506. Since the angular position sensor **20** is adjusted mechanically there is no need for external circuitry for electrically adjusting the sensor **20**. As such, the output of the magnetic sensing device **43** is adapted to be directly coupled to the fuel control circuit (not shown) for the internal combustion engine. By eliminating the need for external potentiometers or variable resistors, the need for conductive tracings on a printed circuit board to connect the magnetic sensing device **43** to such external potentiometers or variable resistors is eliminated. As mentioned above, the conductive tracings in such an application can act as antennas and thus subject the sensor to various electromagnetic interference. In sensors which incorporate such external potentiometers or variable resistors for adjustment, for example, as disclosed in U.S. Pat. No. 4,893,502, the circuitry must be shielded against electromagnetic interferences which adds to the cost of the sensor. Such external potentiometers or variable resistors are also affected by temperature. Thus, in a relatively hostile environment, such as an under-hood environment of an internal combustion engine, the calibration drifts with temperature change. The angular position sensor **20** in accordance with the present invention solves these problems by using a mechanical adjustment for the sensor which eliminates the need for external potentiometers and the like.

As best shown in FIG. **13**, the magnetic sensing element **43** is mounted stationary relative to the housing **22** at a fixed air gap **54** relative to a surface **58** of the magnet **42** that is generally parallel to the magnetic axis **52**. The generally L-shaped flux concentrators **44** and **46** are rigidly disposed relative to the magnetic sensing device **43** forming an assembly **60**. In particular, the magnetic sensing device **43** is sandwiched between the generally L-shaped flux concentrators **44** and **46** to form the assembly **60**. The assembly **60** is disposed such that a sensing plane **62**, defined by the magnetic sensing element **43**, is generally parallel to the axis of rotation **50** of the magnet **42**. As shown, a Hall effect IC is used as the magnetic sensing element **43**. In such an embodiment, the sensing plane **62** is defined as a plane generally parallel to opposing surfaces **64** and **66**, shown in FIG. **4**.

As shown in FIG. **2**, the assembly **60** is disposed such that the axis of rotation **50** of the magnet **42** is through the midpoint of the magnetic sensing device **43** and parallel to the sensing plane **62**. However, it is also contemplated that the assembly **60** can be disposed such that the axis of rotation **50** is offset from the midpoint of the magnetic sensing element **43** along an axis generally parallel to the sensing plane **62**.

As shown in FIG. **4**, the angular position sensor **20** is in a quiescent state. In this state the magnetic flux density B, represented by the arrows identified with the

reference numeral **68**, is generally parallel to the sensing plane **62** of the magnetic sensing device **43**. In this state the magnetic sensing element **43** outputs a quiescent voltage. For an Allegro Model No. 3506 Hall effect IC, the quiescent output voltage is typically about 2.5 volts DC. Rotating the magnet **42** counterclockwise as shown in FIGS. **5** or **6** or clockwise (not shown) causes an ever increasing amount of magnetic flux density **68** to be applied to the sensing plane **62** of the magnetic sensing element **43** to vary the output voltage of the magnetic sensing element **43** as a function of an angle θ defined between an axis **63** parallel to the sensing plane **62** and an axis **65**. For an Allegro Model No. 3506, the output voltage swing is approximately ± 2.0 volt DC depending on the direction of the angular rotation.

In accordance with an important aspect of the invention, the relationship between the axes **63** and **65** can be varied in order to adjust the offset voltage of the sensor **20**. In particular, the assembly **60** is rotated relative to the magnet **42** in a quiescent state to adjust the sensor offset voltage. In such an application, the sensor would be configured in the quiescent state to have a small angle θ between the axes **63** and **65** as illustrated in FIG. **4**.

As will be discussed in more detail below, an important aspect of the invention relates to the fact that the output voltage of the angular position sensor **20** varies linearly as a function of the angular rotation of the magnet **42**. As such, the output voltage of the angular position sensor **20** can be applied directly to the fuel consumption circuit for the internal combustion engine without the need for additional and expensive external circuitry. In particular, known angular position sensors have utilized various circuitry including microprocessors to linearize the output voltage, which adds to the complexity and cost of the sensor. The angular position sensor **20** in accordance with the present invention eliminates the need for such external circuitry. In particular, the output signal is linearized by way of the generally L-shaped or book-end type flux concentrators **44** and **46**, which not only direct the magnetic flux and control the density and polarity of the magnetic flux density but also linearize the output signal to near straight line form. As such, the angular position sensor **20**, in accordance with the present invention, is adapted to be substituted for potentiometer-type throttle position sensors which are contact devices with a finite life. More particularly, FIG. **7** illustrates a graph of the output voltage of the angular position sensor **20** as a function of the degrees of rotation. The solid line **72** represents the output of the angular position sensor **20** without the book-end shaped flux concentrators **44** and **46**. As shown, the output voltage of such an embodiment varies relatively non-linearly relative to the degrees of rotation. By incorporating the book-end shaped flux concentrators **44** and **46**, the output voltage of the angular position sensor **20** becomes fairly linear. More particularly, the solid line **74** represents the desired relationship between the output voltage of the angular position sensor **20** versus the degrees of rotation of the magnet **42**. The dashed line **76** represents the output voltage of the sensor **20** which incorporates the book-end shaped flux concentrators **44** and **46**. As illustrated, the dashed line **76** is fairly linear over the anticipated operating range of the sensor, for example, 110° rotation.

The book-end shaped flux concentrators **44** and **46** are formed from a magnetically soft material — a magnetically permeable material which does not retain residual magnetism. Various configurations of the book-end shaped flux concentrators **44** and **46** are contemplated, for example, as shown in FIGS. **8** and **9**. Referring to FIG. **8**, the book-end flux concentrators **44** and **46** are formed in a generally L-shape defining two depending leg portions **78** and **80**. The outer intersection of the depending legs **78** and **80** defines a heel portion **82**. The inner intersection of the depending legs **78** and **80** defines a generally arcuately-shaped inner portion **84**. It is also contemplated that the inner portion **84** may be formed such that the depending leg portions **78** and **80** are virtually perpendicular at the point of intersection or have a predetermined radius of curvature as illustrated in FIG. **8**. In the preferred embodiment illustrated in FIG. **9**, the flux concentrators **44** and **46** are formed in a similar manner as the flux concentrators illustrated in FIG. **8** but with the heel portion **82** removed and a relatively larger radius of curvature for the inner portion **84**.

In accordance with another important aspect of the invention, the sensor **20** allows the sensitivity (e.g., volts/degree of rotation) of the sensor **20** to be adjusted mechanically. As discussed above, various known sensors utilize potentiometers or variable resistors and the like for varying the sensitivity of the sensor. However, such sensors are relatively temperature dependent. Thus, in a relatively hostile environment where the temperature is anticipated to vary over a relatively wide range, the calibration of such sensors is known to drift. The angular position sensor **20** in accordance with the present invention solves this problem by providing a method for mechanically adjusting the sensitivity of the sensor without the need for potentiometers and the like. In particular, an additional flux concentrator **48** is provided. Although the flux concentrator **48** is described and illustrated having a halo or washer shape, as illustrated in FIG. **2**, for example, it is to be understood that various shapes for the flux concentrator **48** are contemplated. For example, a rectangular shape may be used for the flux concentrator as illustrated and identified with reference numeral **48'** in FIG. **15**. In such an embodiment, various means within the ordinary skill in the art are contemplated for supporting the flux concentrator **48** relative to the magnet **42**.

In the preferred embodiment, the flux concentrator **48** is formed in a generally circular or halo shape with a centrally disposed aperture **86**. The flux concentrator **48** is adapted to be disposed such that the midpoint of the aperture **86** is generally coaxial with the axis of rotation **50** of the magnet **42**. The sensor's sensitivity is adjusted by varying the distance between the flux concentrator **48** and the magnet **42** in an axial direction relative to the axis of rotation **50** as indicated by the arrows **88** (FIG. **2**). It is contemplated that the plane of the flux concentrator **48** be generally parallel to the plane of the magnet **42**. The halo-shaped flux concentrator **48** thus provides a mechanical and relatively stable method for adjusting the sensitivity of the sensor **20** utilizing a relatively inexpensive and until now often impractical class of linear IC; impractical because of the relatively wide range of part-to-part electrical output values of offset voltage and sensitivity per gauss.

In an alternate embodiment of the invention as illustrated in FIG. **10**, it is contemplated that the flux concentrator **48** be formed to be self-temperature compensating. In this embodiment, the flux concentrator **48** may be formed in a plurality of layers. Three layers are

shown for example. The outer layers **90** are formed from a first material, for example, an iron-nickel alloy comprised of approximately 29%–33% nickel. The inner layer **92** is formed from low carbon steel, for example, C1008 low carbon steel. With such an embodiment, the properties of the nickel alloy used in the outer layers **90** cause the permeability of the outer layers **90** to decrease with an increase in temperature which decreases the ability of the flux concentrator **48** to concentrate magnetic flux as a function of temperature. Thus, as the temperature increases, the magnetic flux concentrator **48** captures less of the magnetic field causing a relatively greater portion of the magnetic field to be applied to the magnetic sensing element **43** during such a condition. Thus, since it is known that the magnetic field intensity of known magnets weakens as a function of temperature, the magnetic flux concentrator **48** illustrated in FIG. **10** allows a greater percentage of the magnetic flux density **68** to be applied to the magnetic sensing element **43** during relatively high temperature conditions and is thus self-temperature compensating.

FIGS. **11** and **12** illustrate a carrier assembly **94** for carrying the magnetic sensing device **43** as well as the magnetic flux concentrators **44**, **46** and a halo-shaped flux concentrator **48**. In particular, FIG. **11** illustrates the carrier assembly **94** with the halo-shaped flux concentrator **48** removed. The carrier assembly **94** includes a disk-shaped base portion **96** and a generally T-shaped frame portion **98**. The T-shaped frame portion **98** defines a pair of depending legs **100** and **101**, disposed generally perpendicular to the plane of the base portion **96**, interconnected by a connecting member **102**. A stud portion **104** is formed to extend outwardly from the connecting member **102**. The stud portion **104**, as will be discussed in more detail below, is used for adjusting the distance between the halo-shaped flux concentrator **48** and the magnet **42**. In alternate embodiments of the invention where a configuration other than a halo shape is used for the additional flux concentrator, for example, a rectangular shape, as illustrated in FIG. **15**, the stud portion **104** is unnecessary and thus eliminated and substituted with a suitable arrangement for supporting such a flux concentrator **48'** relative to the magnet **42**.

Referring back to the preferred embodiment, the halo-shaped flux concentrator **48** is shown with a generally star-shaped aperture **86**. In such an application, the diameter of the stud **104** is formed to provide a friction fit with the irregular-shaped aperture **86** to allow the sensitivity of the sensor **20** to be adjusted by way of axial movement of the flux concentrator **48** relative to the magnet **42**. In an alternate embodiment of the invention, it is contemplated that the stud **104** and the aperture **86** be threaded to enable the distance between the flux concentrator **48** and the magnet **42** to be varied by rotating the flux concentrator **48**.

The book-end type flux concentrators **44** and **46** are disposed intermediate the depending legs of the T-shaped frame **98** to enable the magnetic sensing device **43** to be sandwiched therebetween. As shown best in FIG. **14**, the magnetic sensing device **43** is a three wire Hall effect IC. This magnetic sensing device **43** is adapted to be connected to a flexible printed circuit board **106** (FIG. **12**) and wrapped around the frame **98** as best illustrated in FIG. **12**. Opposing fingers **105** may also be formed in the depending leg portions **100** and **101** to capture a portion of the printed circuit board **106** as shown. A terminal structure **107** is then connected to the printed circuit board **106** to enable the sensor **20** to be connected to an external electrical conductor (not shown). The terminal structure **107** is shown in FIG. **12** with bridging members **109**, which are removed to form three electrical terminals **111**, **113** and **115**. The carrier assembly **94** complete with the printed circuit board **106** is then assembled to the housing **22** as illustrated in FIG. **13**.

An alternate embodiment of the sensor is illustrated in FIG. **14**, identified with the reference numeral **20'**. In this embodiment, like components are identified with the same reference numerals and are distinguished with primes. The housing **22'** is formed as an irregular-shaped housing with a central aperture **108** for receiving the drive arm **24**. As best shown in FIG. **1**, the drive arm **24** is formed with a centrally disposed aperture **110** on one end (FIG. **1**) that is keyed or otherwise adapted to rotate with the butterfly valve shaft **26** defining a drive arm portion **123** (FIG. **14**). The other end of the drive arm **24** is provided with a generally rectangular aperture **112** defining a magnet holder portion **121** for receiving the magnet **42**. The drive arm **24** is adapted to be received in the aperture **108** formed in the housing **22'**. The drive arm **24** may be formed with an integral washer **114** with an extending tongue **116**. The tongue **116** cooperates with stops **118** formed within the aperture **108** which are radially disposed to limit the rotation of the drive arm **24** relative to the housing **22'**. As will be appreciated by those of ordinary skill in the art, the location of the stops **118** within the aperture **108** are provided to coincide with the expected angular rotation of the device whose angular position is being sensed. As mentioned above, when the angular position sensor **20** in accordance with the present invention is used as a throttle position sensor, the stops **118** are provided to allow for about 110° of rotation. In alternate embodiments of the invention, the housing **22** may be formed without the stops **118** to enable a full 360° of isolation for the sensor **20**.

The drive arm **24** may be biased by a torsion spring **120** having extending end portions **122**. The bottom end portion (not shown) is adapted to be received in a slot **124** formed in the aperture **108**. The top end portion **122** is received in a corresponding slot **126** formed in the drive arm **24**. The diameter of the torsion spring **120** is sized to be slightly larger than the magnet holder portion **121**. In embodiments wherein the sensor is adapted to rotate 360°, the torsion spring **120** is eliminated.

The aperture **108** is formed with concentric walls **128**, **130** and **132**. The concentric wall **128** only spans a portion of the circumference of the aperture **108** to form the stops **118** as discussed above. The drive arm portion **123** is received within the aperture **108** to allow rotational movement of the tongue **116** relative to the stops **118**, formed in the partial concentric inner wall **128**. The magnet holder portion **121** is received in an integrally formed circular guide, **134** formed on the underside of the carrier **94'**. Once the drive arm **24** and torsion spring **120** are disposed within the aperture **108**, the carrier assembly **94** closes the aperture **108** by way of an O-ring **158** forming the angular position sensor in accordance with the present invention. As shown, the carrier **94'** and printed circuit board **106'** are configured differently than the embodiment illustrated in FIGS. **11–13**.

As shown, the printed circuit board **106'** may include three conductive tracings **132** for connecting the electrical conductors **144** from the magnetic sensing element **43** thereto. A pair of capacitors **138**, preferably surface mount capacitors, are electrically connected

with the conductive tracings **132** to suppress noise-to-ground. Three plated-through holes **140** are provided for connecting the conductors **144** of the magnetic sensing device **43** to the printed circuit board **106'**. The printed circuit board **106'** includes an additional three plated-through holes **142** for connection with corresponding terminals **148**, insert molded into the housing **22'**, which enables the sensor **20'** to be connected to an external electrical conductor (not shown). Once the components of the sensor **20'** are assembled, the component side **146** of the sensor **20'** is then potted with a suitable potting compound, such as epoxy to seal the electrical components. This allows the electrical components of the sensor to be sealed from moisture, contaminants and the like without the need for a dynamic or a static seal as discussed above. As such, the seal in accordance with the present invention is virtually unaffected by wear or vibration.

As discussed above, the angular position sensor **20, 20'** is connected to a throttle body **27** by way of the fasteners **40**. Thus, the housing **22, 22'** may be provided with a pair of oppositely disposed apertures **154** for receiving a pair of insert molded mounting sleeves **156**. The fasteners **40** are received in the mounting sleeves **156** and are used to connect the sensor **20, 20'** to the throttle body **27**.

While the invention has been described with reference to details of the embodiments shown in the drawings, these details are not intended to limit the scope of the invention as described in the appended claims.

What is claimed is:

1. An angular position sensor for sensing the angular position of a pivotally mounted device comprising:

a housing;

a magnet for generating magnetic flux defining a magnetic axis through opposing North and South magnetic poles;

a drive arm, rotatably carried relative to said housing, said drive arm including means for providing a mechanical coupling to said pivotally mounted device and means for carrying said magnet;

means disposed adjacent said magnet for sensing the magnetic flux density generated by said magnet;

means for mechanically adjusting said sensing means;

means for carrying said sensing means at a predetermined fixed air gap relative to said magnet;

means for providing temperature compensation for said sensors, wherein said temperature compensation providing means includes a flux concentrator.

2. An angular position sensor as recited in claim **1**, wherein said flux concentrator is formed from a plurality of materials defining one or more layers.

3. An angular position sensor as recited in claim **2**, wherein said one or more of said layers are formed from a material whose permeability decreases at a different rate with increasing temperature relative to the other material layer.

4. An angular position senor as recited in claim **3**, wherein said one or more of said layers are formed from an iron-nickel alloy.

5. An angular position sensor as recited in claim **2**, wherein said one or more of said layers are formed from steel.

6. A method for adjusting the sensitivity of a throttle position sensor which includes a magnet and a magnetic sensing element, said throttle position sensor including a magnet, a magnetic sensing element, disposed a first predetermined distance from said magnet and a movably mounted flux concentrator, disposed a second predetermined distance from said magnet, said magnet and said magnetic sensing element being rotatably mounted relative to each other; the method comprising the steps of:

a) varying said second predetermined distance until the desired sensitivity is attained without altering said first predetermined distance; and

b) securing said flux concentrator in place at the location of desired sensitivity.

* * * * *