US005415144A

United States Patent [19]

Hardin et al.

[11] **Patent Number: 5,415,144**

[45] **Date of Patent: May 16, 1995**

[54] **THROTTLE POSITION VALIDATION METHOD AND APPARATUS**

[75] Inventors: **George T. Hardin; James A. Keller; Earl C. Pearson,** all of Knoxville, Tenn.

[73] Assignee: **Robertshaw Controls Company,** Richmond, Va.

[21] Appl. No.: **182,625**

[22] Filed: **Jan. 14, 1994**

[51] **Int. Cl.**[6] **F02D 7/00**

[52] **U.S. Cl.** **123/399**

[58] **Field of Search** 123/399, 478, 493, 494, 123/397, 361, 339; 180/197, 335; 338/153, 172, 174, 200; 333/184; 73/118.1, 513; 364/431.05

[56] **References Cited**

U.S. PATENT DOCUMENTS

2,192,714	3/1940	Norman et al.	123/399
3,837,321	9/1974	Sauer	123/399
3,858,561	1/1975	Aono	123/399
3,911,872	10/1975	Hughes	123/399
3,926,153	12/1975	Reddy	123/399
4,133,320	1/1979	Bianchi et al.	123/399
4,305,359	12/1981	Mann et al.	123/333
4,308,838	1/1982	Nakano et al.	123/492
4,355,293	10/1982	Driscoll	333/184
4,528,590	7/1985	Bisacquino et al.	338/153
4,532,908	8/1985	Steinbrenner	123/493
4,603,675	8/1986	Junginger et al.	123/478
4,653,453	3/1987	Kamai et al.	123/444
4,703,649	11/1987	Eitoku et al.	73/118.1
4,703,823	11/1987	Yogo et al.	180/197
4,706,062	11/1987	Männle et al.	338/172
4,722,313	2/1988	Kohler et al.	123/494
4,883,037	11/1989	Mabee et al.	123/399
4,915,075	4/1990	Brown	123/399
4,933,661	6/1990	Oda et al.	338/174
4,944,269	7/1990	Imoehl	123/399
4,958,607	9/1990	Lundberg	123/399
4,983,946	1/1991	Kotaki et al.	338/200
5,133,321	7/1992	Hering et al.	123/399
5,307,776	5/1994	Unuvar et al.	123/399
5,327,865	7/1994	Reihemann	123/397
5,339,782	8/1994	Golzer et al.	123/399

OTHER PUBLICATIONS

H. Collona, "VDO 'Electric Accerlerator' Remote Control", distributed at the Second Int'l Conference on Automotive Electronics, London, England held Oct. 29–Nov. 2, 1979.

Primary Examiner—Raymond A. Nelli

Attorney, Agent, or Firm—Watts, Hoffmann, Fisher & Heinke

[57] **ABSTRACT**

An engine control system is disclosed having a unit for providing signals indicative of the position of an engine throttle member. The unit comprises a housing assembly associated with an engine throttle member and containing a stator assembly and a rotor assembly. The rotor assembly moves relative to the stator assembly as the throttle member moves. The rotor and stator assemblies are electrically coupled together for producing first and second continuously variable, ratiometrically identical signals whose values depend upon the throttle member position. The first signal is delivered from the housing assembly for use in controlling the engine operation. Processing circuitry processes the second signal for producing a throttle position validation signal having a first value when the throttle member is in an engine idle range of positions and a second value when the throttle member moves beyond the idle range of positions. If the first signal and the validation signal signify incompatible throttle member positions the engine speed is limited to "idle."

12 Claims, 11 Drawing Sheets

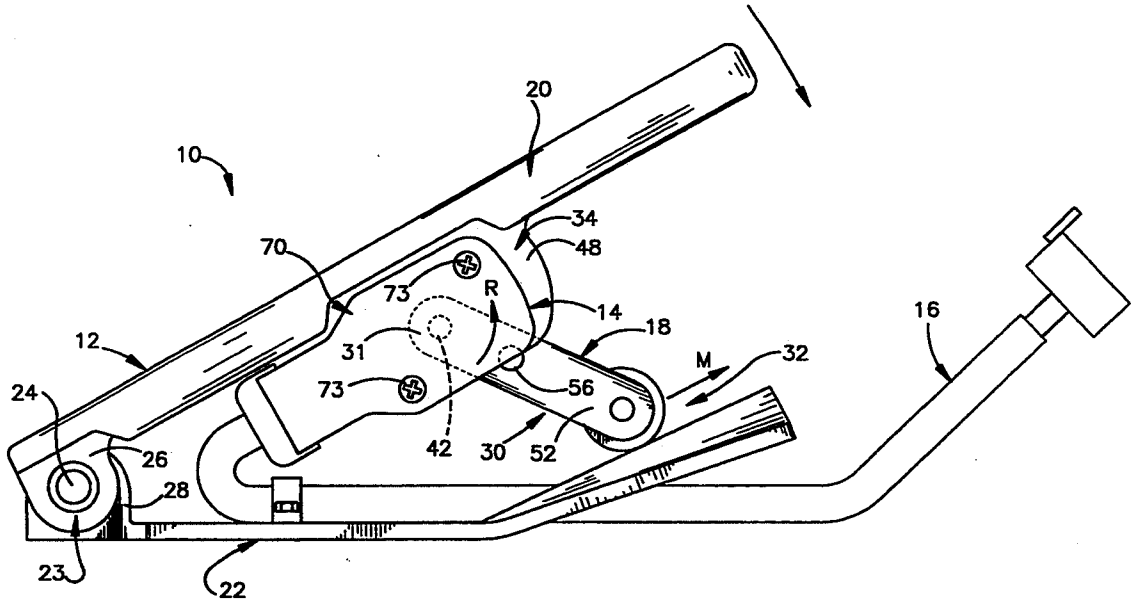

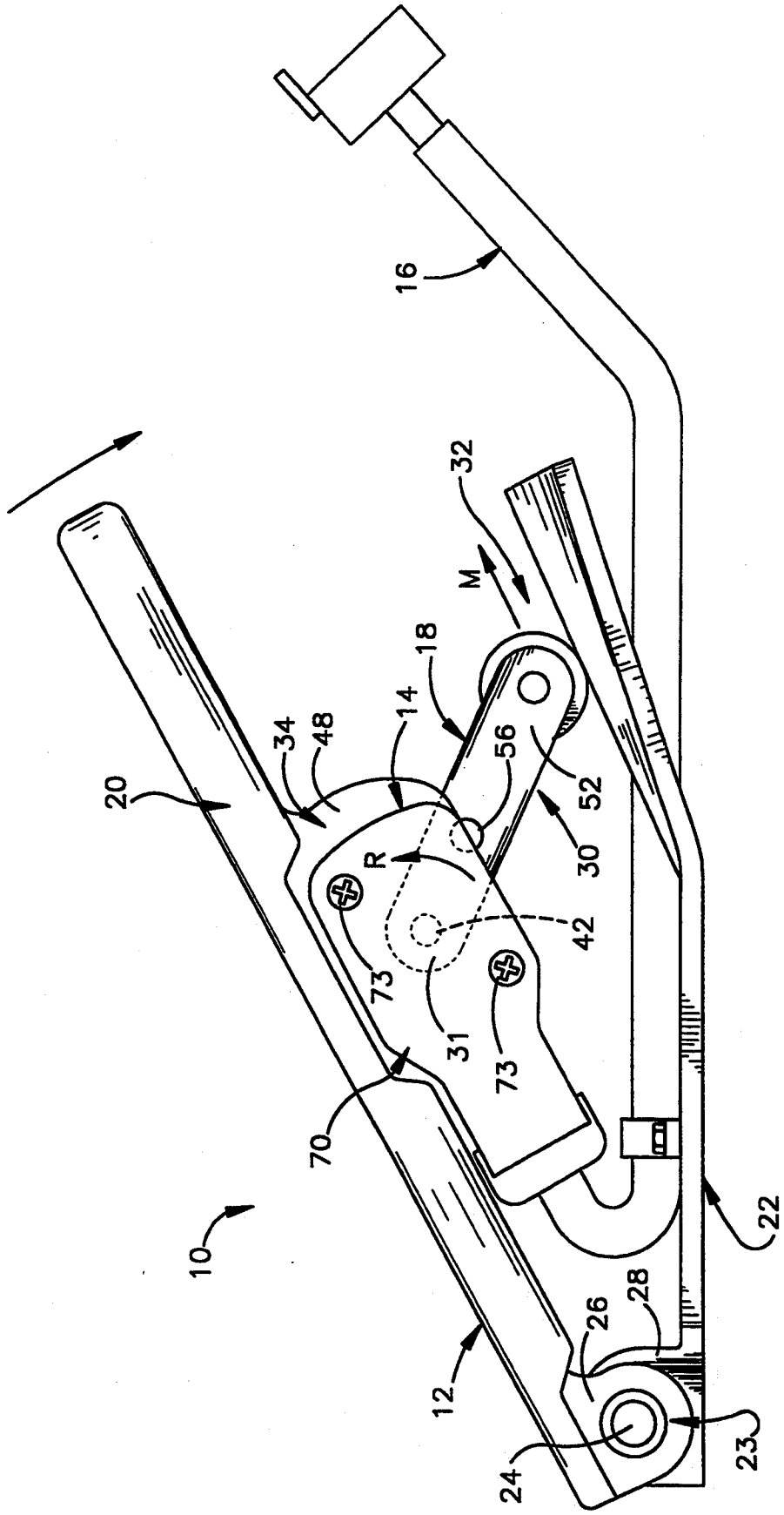

Fig.1

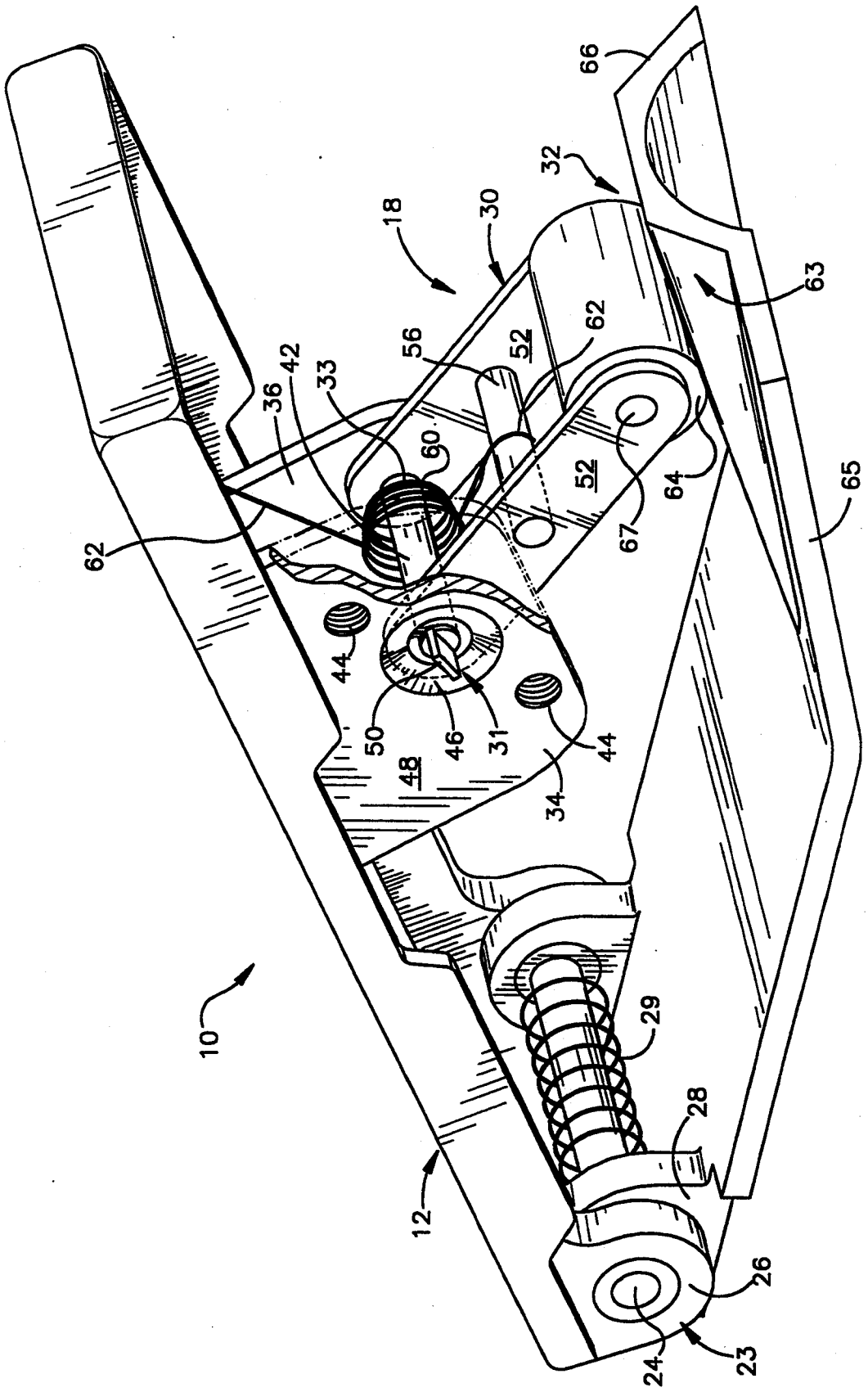
10
12
18
23
24
26
28
29
30
31
32
33
34
36
42
44
44
46
48
50
52
52
56
60
62
62
63
64
65
66
67

Fig.2

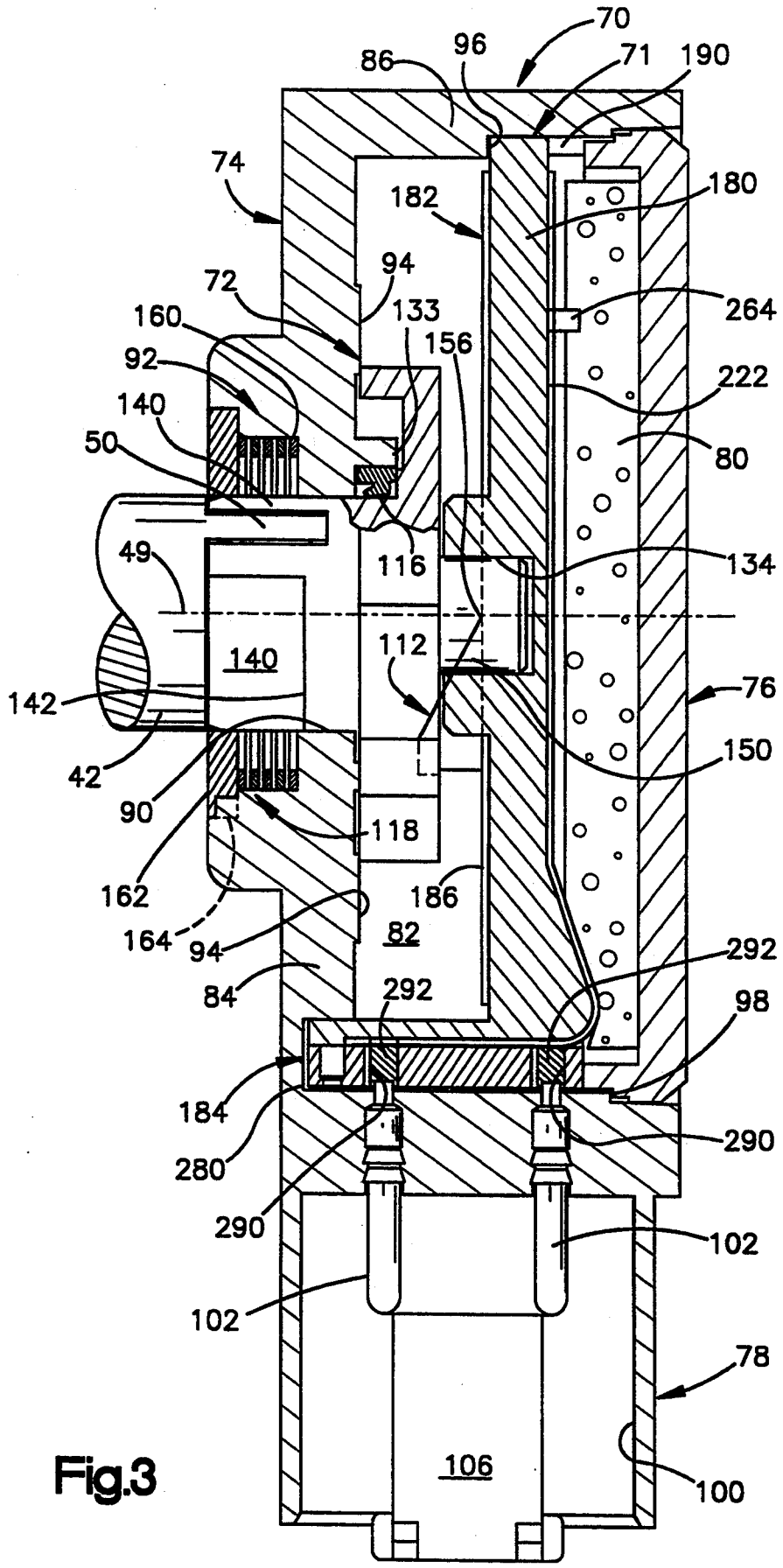
70
96
86
71
190
74
182
180
94
72
133
264
160
156
92
222
140
50
80
49
116
134
140
112
76
142
150
42
90
118
162
186
164
94
82
292
84
292
98
184
280
290
290
102
102
78
106
100

Fig.3

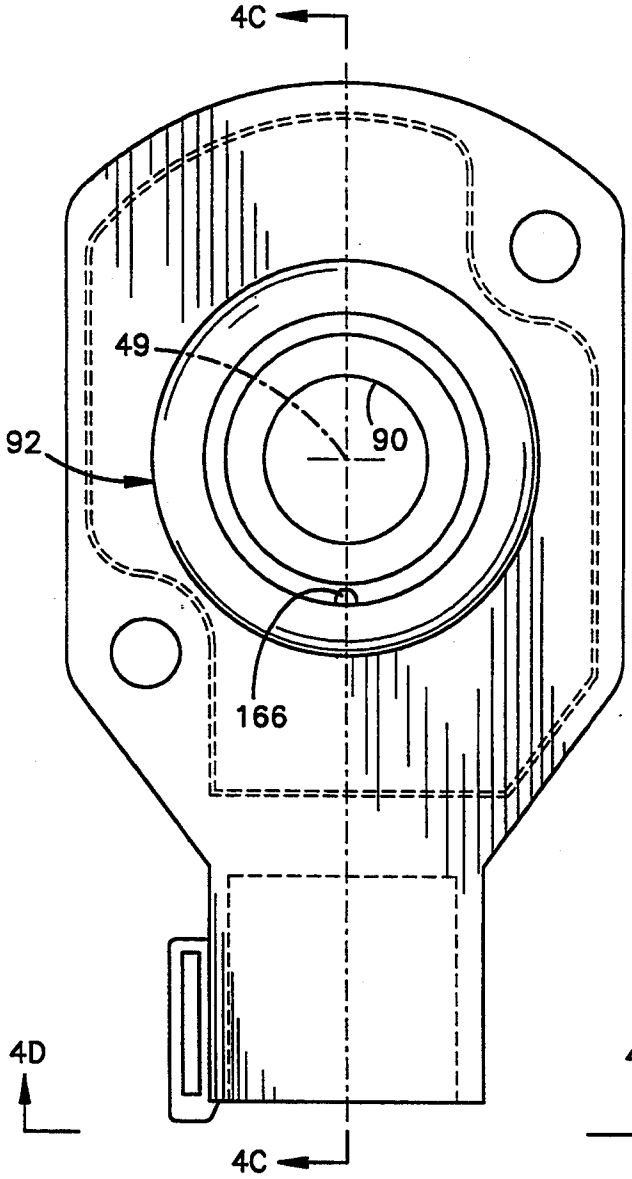

Fig.4A

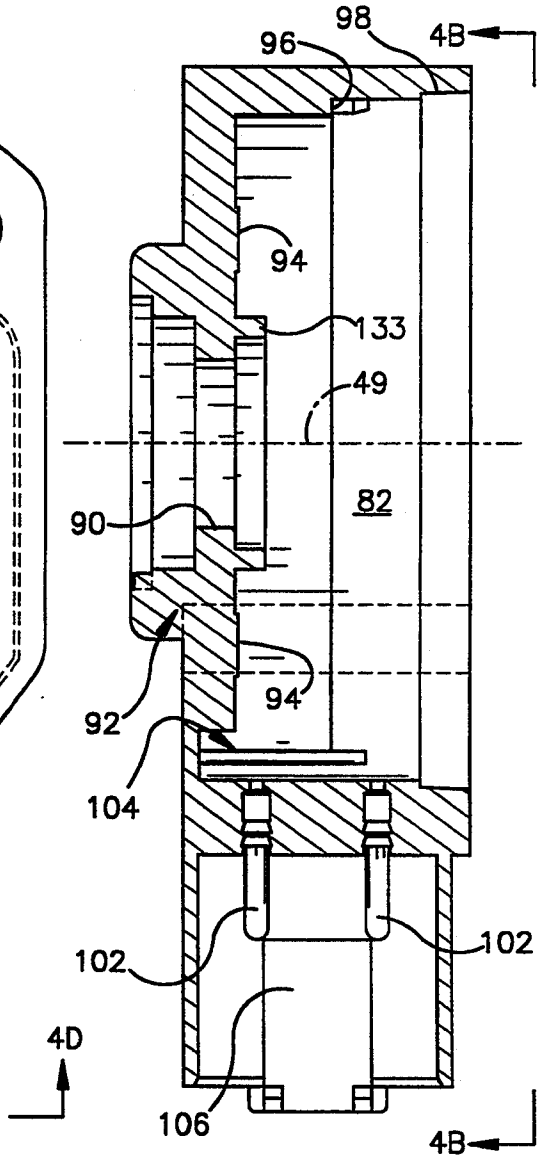

Fig.4C

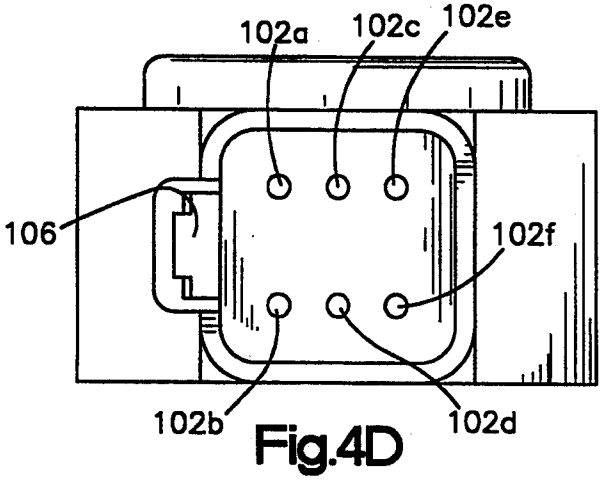

Fig.4D

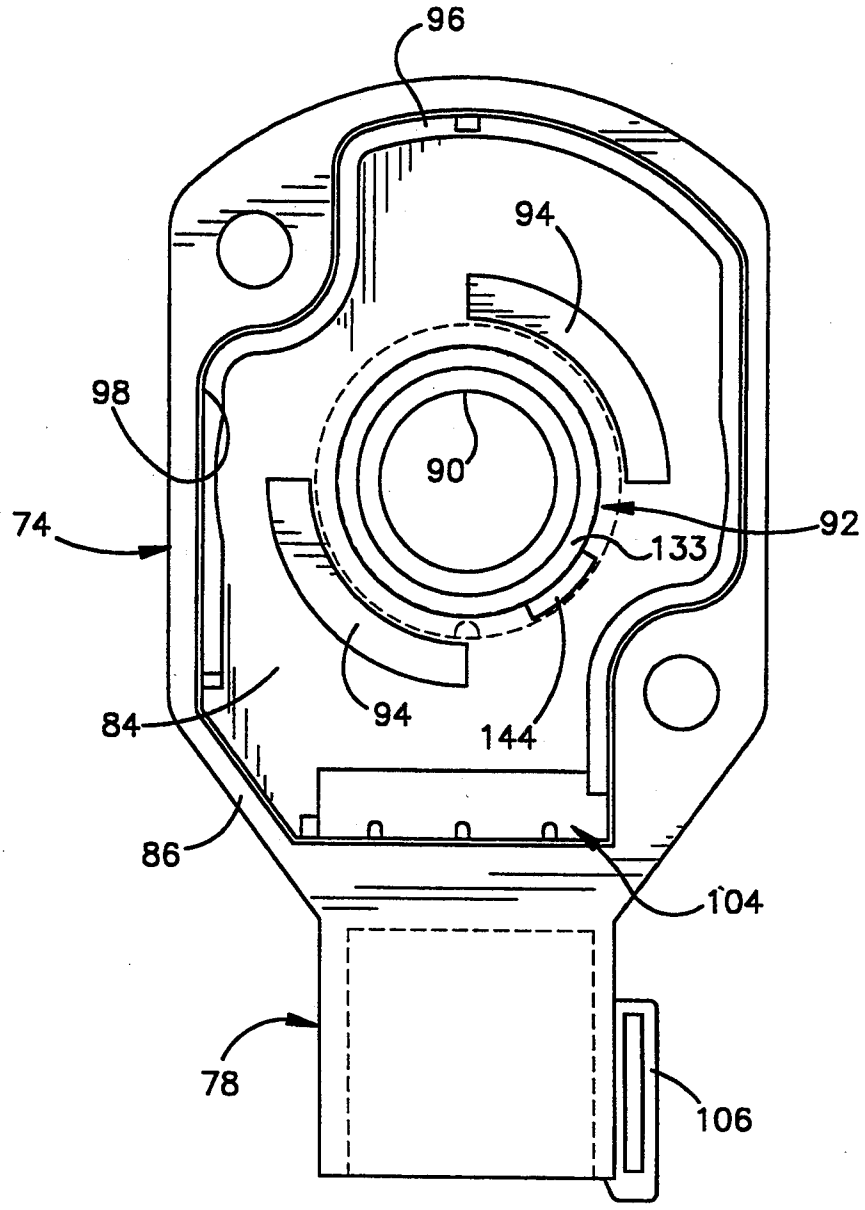

Fig.4B

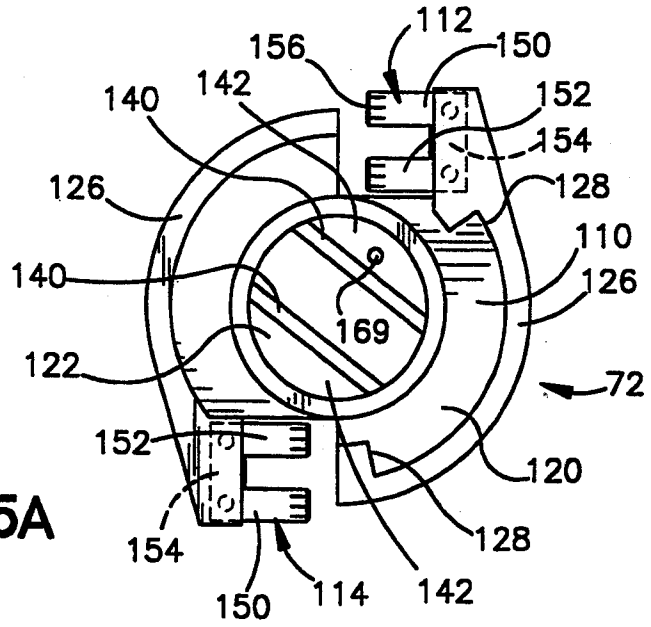
112
156
150
142
140
152
154
126
128
110
140
126
169
122
72
152
120
154
128
150
114
142

Fig.5A

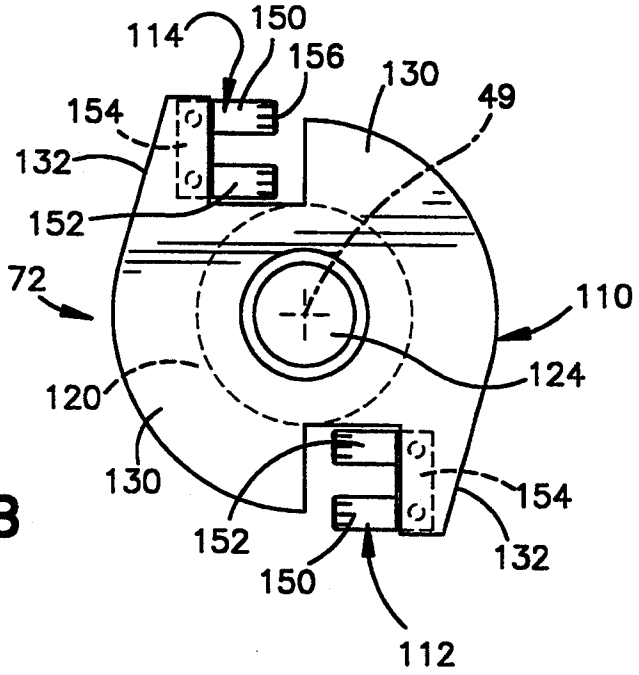
114
150
156
130
49
154
132
152
72
110
124
120
130
154
152
132
150
112

Fig.5B

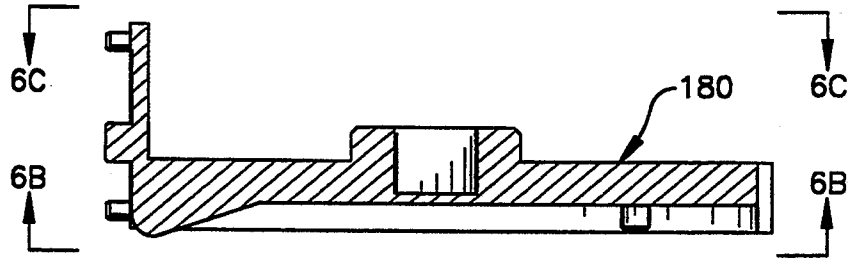

Fig.6A

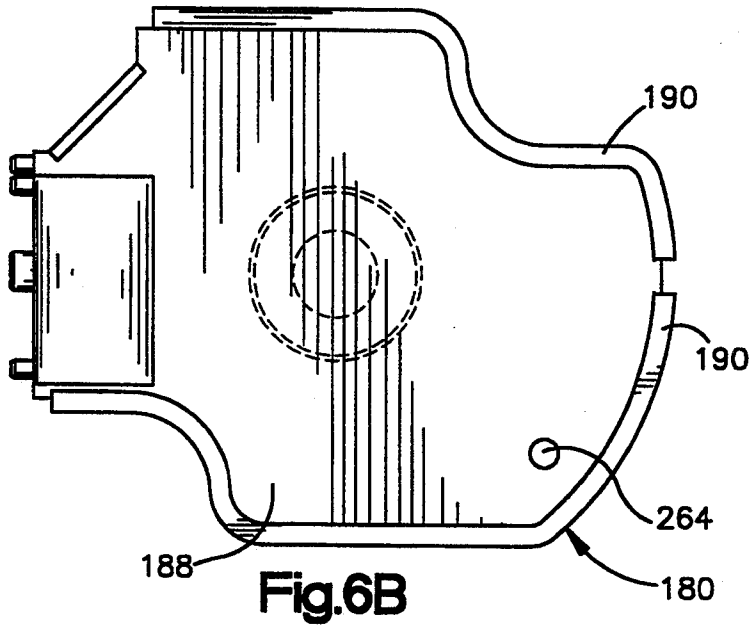

Fig.6B

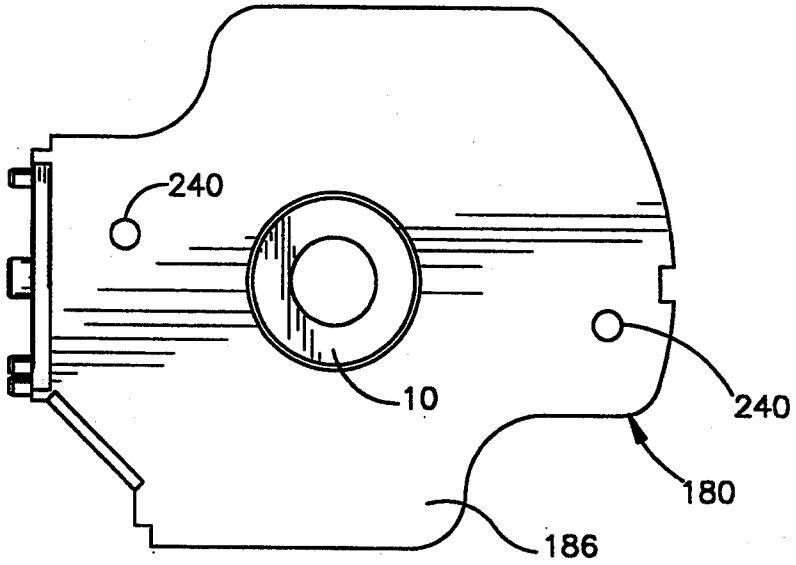

Fig.6C

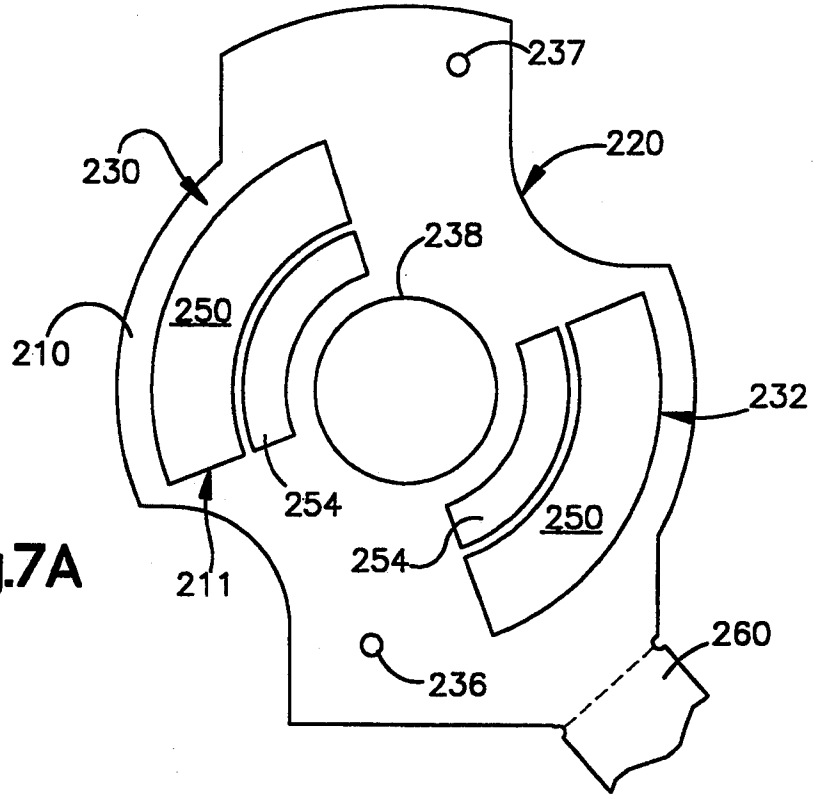
237
220
230
238
250
210
232
254
250
254
211
260
236

Fig.7A

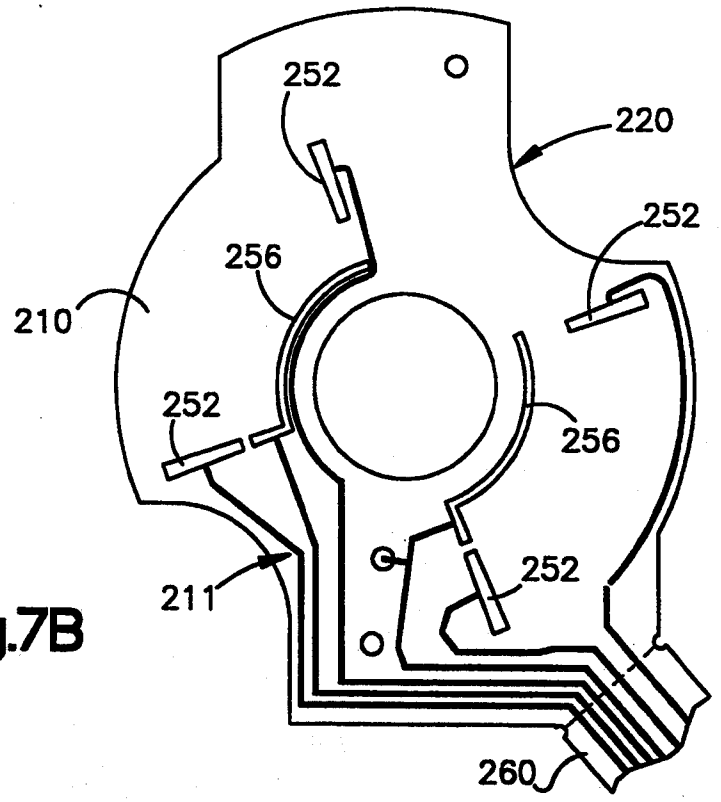
252
220
252
256
210
252
256
252
211
260

Fig.7B

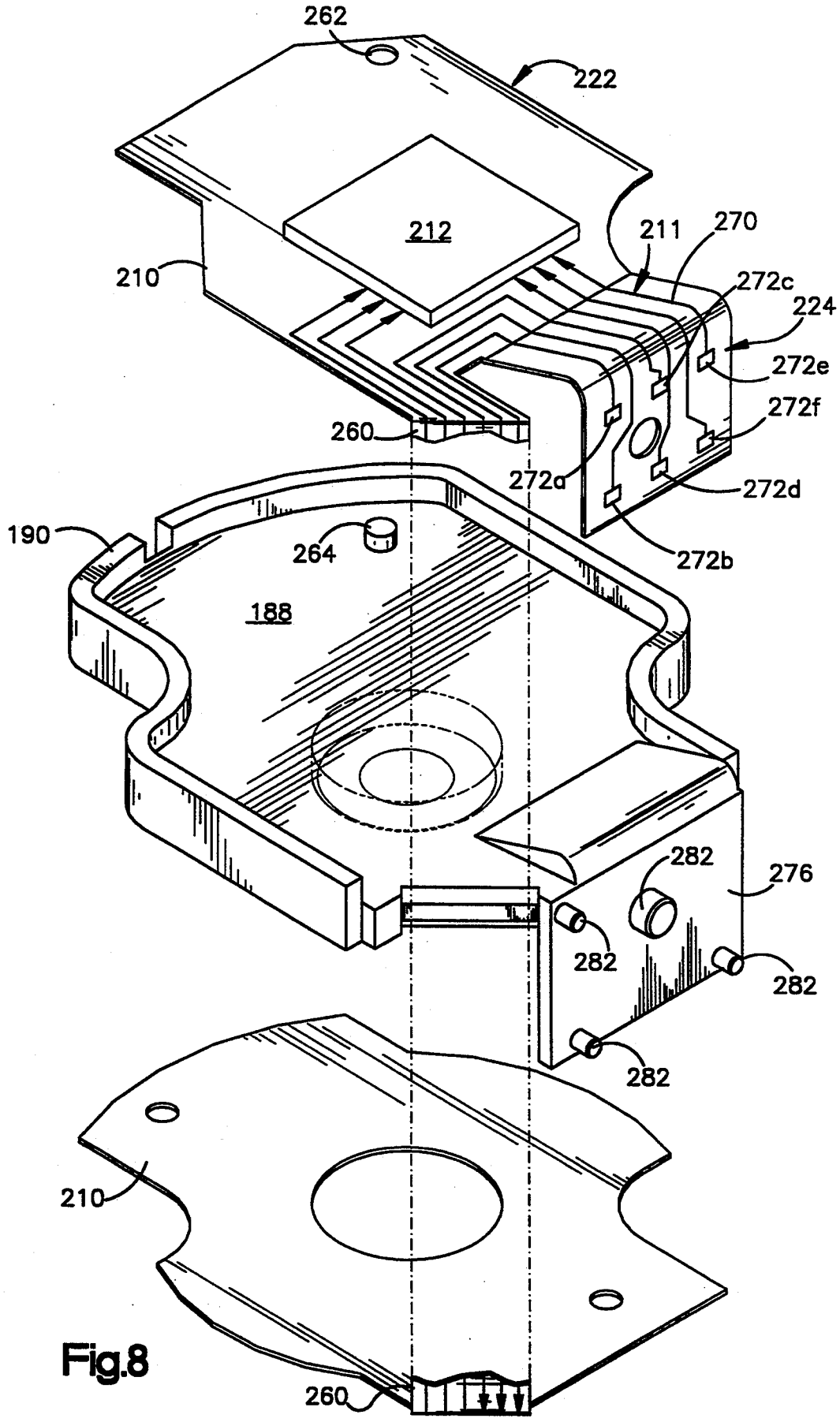
262
222
212
211
270
210
272c
224
272e
272f
260
272a
272d
190
264
272b
188
282
276
282
282
282
210
260

Fig.8

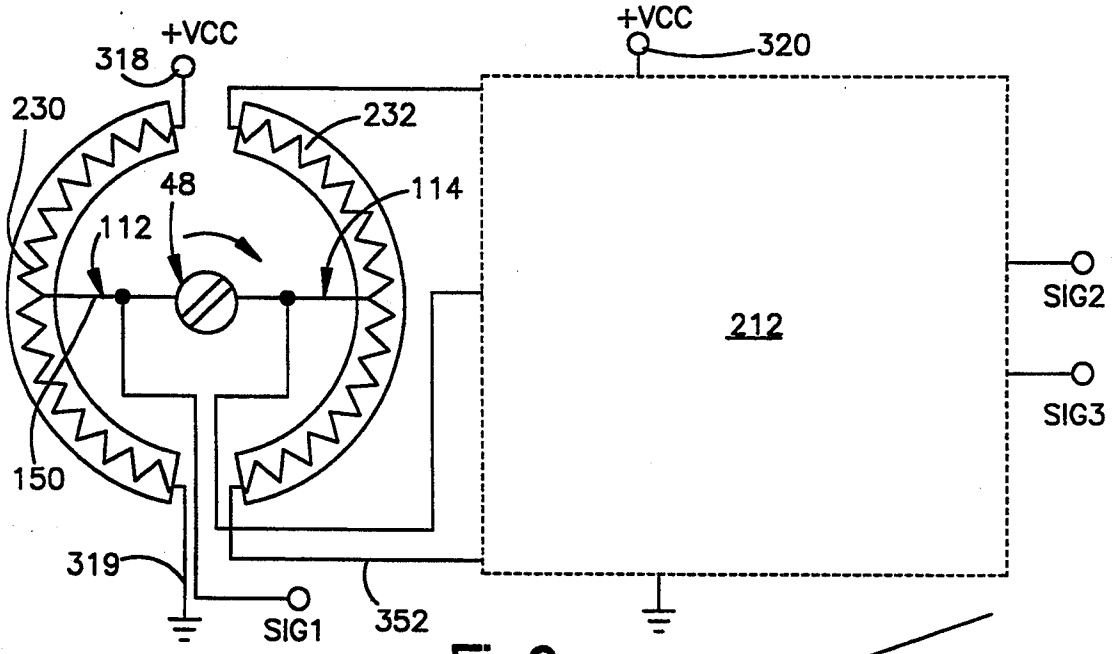

Fig.9

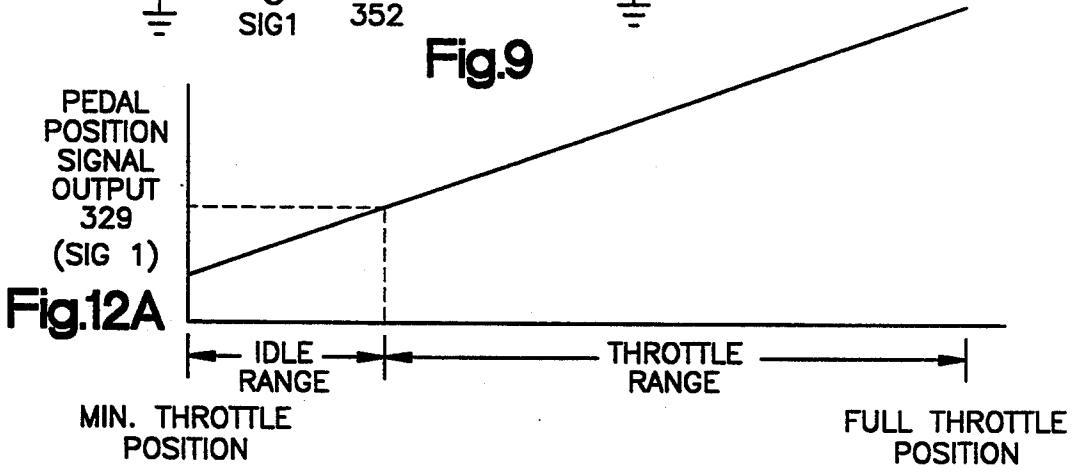

Fig.12A

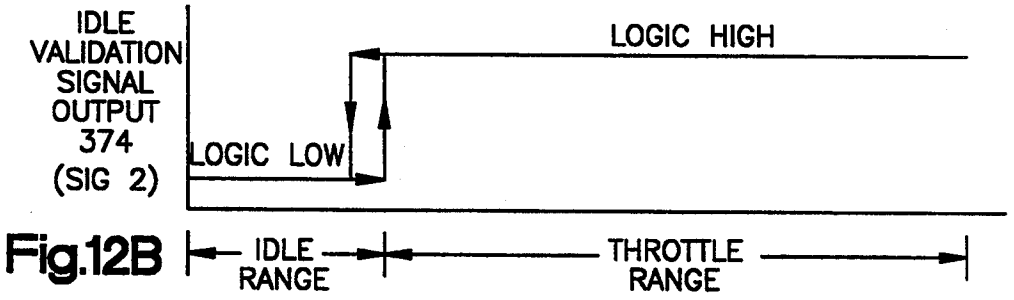

Fig.12B

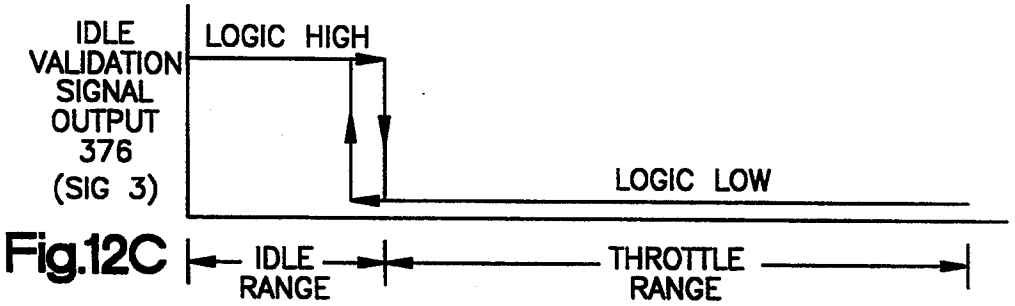

Fig.12C

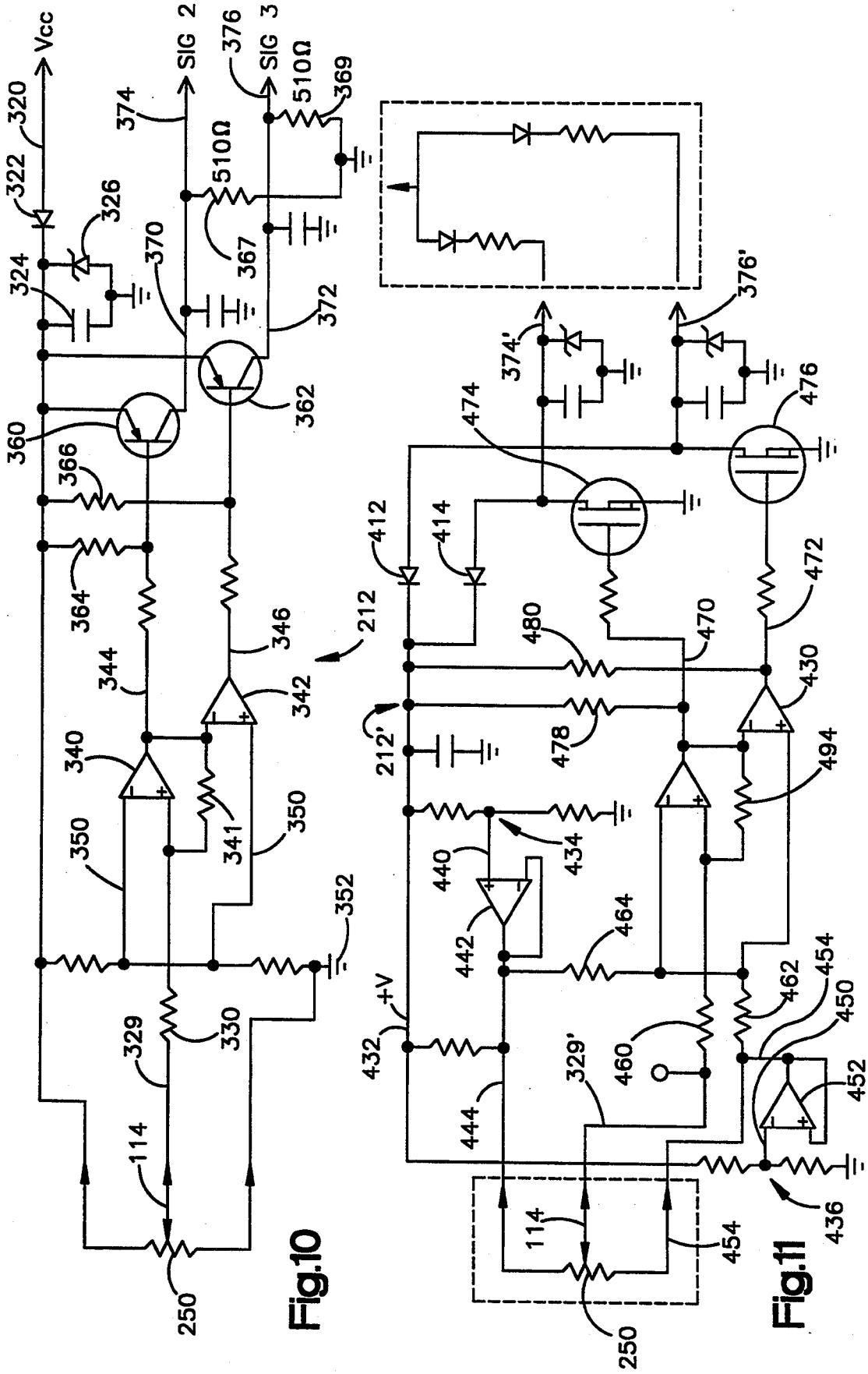

Fig.10

Fig.11

THROTTLE POSITION VALIDATION METHOD AND APPARATUS

FIELD OF THE INVENTION

The present invention concerns a throttle pedal position sensor for a motor vehicle and, more particularly, a throttle pedal position sensor that provides complementary signals for validating throttle positioning.

BACKGROUND ART

In prior art motor vehicle designs, engine setting has been achieved by a mechanical linkage between a throttle control element, such as a foot pedal, and a butterfly valve which opens and closes to adjust the amount of combustion air entering the engine intake manifold. With the increasing use of fuel injection, many vehicles employ electronic controls to adjust the amount of fuel reaching the engine combustion chambers. Proposals have been made to directly convert throttle pedal position to an electric signal which controls fuel injection. Such vehicles may not employ any direct mechanical linkage between the throttle pedal and the engine. Instead, the fuel flowing to the engine is controlled by an electric signal whose value varies according to throttle pedal position. In case of a failure in the electronics resulting in false output signals, the vehicle engine speed could become uncontrollable by the operator.

In order to assure safe operation of such vehicles, engine idle validation devices have been employed. When the engine throttle pedal is in its "engine idle" position (e.g. when an operator's foot is off the pedal), an output signal is produced signifying that the pedal is not depressed. When the pedal is depressed beyond a predetermined "idle" position, the validation device signals that the pedal is away from the idle position. Engine operation in response to the pedal position is then enabled.

Idle validation devices have sometimes taken the form of mechanical on-off type switches actuated by the throttle pedal separately from the throttle position signal generator. The mechanical switches had to be installed and calibrated so that they accurately signalled the pedal position. In use, these switches were subject to mechanical forces which shifted them relative to the pedal and to the pedal position signal generator. Besides requiring recalibration, shifting switch settings relative to the pedal position signal generators could disable the vehicle. Moreover, the mechanical switches exhibited fixed relatively wide hysteresis which was undesirable. An example of a prior art proposal of an idle validation device for use with an electronic fuel injection control is disclosed in U.S. Pat. No. 5,133,321 to Hering et al. The Hering et al. patent provided an idle verification device which was fixed in a housing with a pedal position signal generator so that calibration settings could not drift relative to each other. The idle verification switch was provided by a deposited resistance material similar to the deposited material used to form the signal generator. The deposited material forming the idle verification switch was interrupted so that when the pedal was in its idle position one section of the material was engaged by a conductive wiper arm to signal the pedal position at idle. The other section of the material was engaged to signal the pedal position away from idle.

This approach required that the resistance material sections be spaced apart, creating a "dead band" in which the conductive wiper arm engaged neither section of the deposited material. No output of any sort was available from the verification switch in the dead band, which is undesirable. The dead band simulated hysteresis so that the pedal position could be varied somewhat without generating frequent incompatible verification signals.

The present invention provides a new and improved throttle pedal position signalling unit. Wherein independently derived signals both indicate pedal position and validate the pedal position without requiring calibration or periodic adjustments for recalibration.

DISCLOSURE OF THE INVENTION

An engine control system is disclosed having a unit for providing signals indicative of the position of an engine throttle member. The unit comprises a housing assembly associated with an engine throttle member and defining a chamber for a rotor assembly and a rotor assembly. The stator assembly is fixed against movement with respect to the housing and the stator assembly is connected to the throttle member for movement relative to the stator assembly in relation to throttle movement. The rotor and stator assemblies are electrically coupled together for producing first and second continuously variable, ratiometrically identical signals whose values depend upon the throttle member position. The first signal is delivered from the housing assembly for use in controlling the engine operation. Processing circuitry processes the second signal for producing a throttle position validation signal having a first value when the throttle member is in an engine idle range of positions. The processing circuitry produces a validation signal having a second value when the throttle member moves beyond the idle range of positions. If the first signal and the validation signal signify incompatible throttle member positions the engine speed is limited to "idle."

BRIEF DESCRIPTION OF THE DRAWINGS

FIG. 1 is a side elevation view of a vehicle throttle pedal assembly embodying the present invention attached thereto;

FIG. 2 is a perspective view of the assembly of FIG. 1 with parts removed;

FIG. 3 is a cross sectional view of a pedal position signal generating unit forming part of the assembly of FIGS. 1 and 2;

FIG. 4A is an elevation view of a housing forming part of the unit of FIG. 3;

FIG. 4B is a view seen approximately from the plane indicated by the line 4B—4B of FIG. 4C;

FIG. 4C is a view seen approximately from the plane indicated by the line 4C—4C of FIG. 4A;

FIG. 4D is a view seen approximately from the plane indicated by the line 4D—4D of FIG. 4A;

FIG. 5A is a top plan view of a rotor component of FIG. 3;

FIG. 5B is a bottom view of the rotor component of FIG. 5A;

FIG. 6A is a cross-sectional view of a stator member illustrated in FIG. 3 and shown on a smaller scale;

FIG. 6B is a view seen approximately from the plane indicated by the line 6B—6B of FIG. 6A;

FIG. 6C is a view seen approximately from the plane indicated by the line 6C—6C of FIG. 6A;

FIG. 7A is an elevational view of a film member having deposited resistance material tracks thereon;

FIG. 7B is a view similar to FIG. 7A wherein the deposited materials are removed and printed electrical circuit elements exposed;

FIG. 8 is an exploded perspective view of the printed circuit film member of FIG. 7 and the stator member of FIG. 6;

FIG. 9 is a schematic diagram of circuitry for generating throttle pedal position signals and complementary position validation signals constructed according to the invention;

FIG. 10 is a schematic diagram of a circuit for generating complementary pedal position validation signals;

FIG. 11 is a schematic diagram of a portion of an alternate circuit for generating complementary pedal position validation signals; and

FIGS. 12A–12C are plots of signals produced by the circuitry of FIGS. 10 and 11.

BEST MODE FOR PRACTICING THE INVENTION

FIGS. 1 and 2 of the drawings illustrate a position signalling throttle pedal assembly 10 embodying the present invention which is constructed for use in controlling automotive vehicle engines. The assembly 10 comprises a throttle pedal unit 12 actuated by a vehicle operator to control the engine, a pedal position signal generating unit 14 (FIG. 1) producing electric signals indicative of pedal position, a signal cable 16 for transmitting the signals to an engine controller (not illustrated), and a linkage 18 for actuating the signal generator 14 in response to pedal positioning.

The assembly 10 is constructed to simulate the operation of a throttle controlling pedal which is mechanically linked to the engine. Thus when the operator's foot is off the pedal (as illustrated in FIG. 1) the engine "idles." As the pedal is depressed, a continuously variable throttle position signal is produced by the unit 14 and transmitted to the engine controller so that progressively more fuel and air are supplied to the engine. Because there is no mechanical linkage between the operator and the engine, it is important to insure against a malfunction of some sort creating spurious electrical signals which cause the engine to operate out of control. The new assembly 10 also produces throttle position validation signals which are also transmitted to the engine controller.

FIGS. 1 and 2 illustrate the pedal unit 12 as comprising a pedal 20, a pedal supporting base plate 22 and a hinge assembly 23 connecting the pedal to the base plate. The base plate 22 is formed of heavy gage sheet metal and secured to the vehicle operator's compartment floor by suitable connectors (not illustrated). The pedal 20 coacts with the hinge assembly and base plate to simulate a conventional pedal mechanically linked to a carburetor or fuel injection system. The pedal is schematically illustrated as constructed from heavy gage sheet metal and may have a rubber-like tread member (not shown) bonded to its upper side for traction and wear resistance. The lower, pedal base end is coupled to the base plate 22 by the hinge assembly 23 so that the upper pedal tip end moves toward and away from the base plate through an arc.

The hinge assembly 23 secures the pedal to the base plate and locates the pedal in its "engine idle" position when the operator's foot is either off the pedal or exerting less than a predetermined force. The hinge assembly 23 comprises a hinge pin 24, pin receiving pillow blocks 26, 28 formed on the pedal and base plate, respectively, and a pedal return spring 29 (FIG. 2). The pillow blocks comprise ear-like projections in which aligned bearings are fixed. The bearings receive the pin 24 to assure a stable, wear resistant, low friction interconnection between the pedal and base plate.

The return spring 29 reacts between the pedal and the base plate to strongly resist depression of the pedal by the operator and to return the pedal to its idle position when the operator's foot is relaxed or removed from the pedal. The preferred spring 29 is a helical torsion spring surrounding the pin 24. Opposite spring ends react between the pedal and base plate, respectively, to bias the pedal.

The linkage 18 reacts between the pedal 20 and the base plate 22 to condition the signal generating unit 14 for signalling the exact pedal position relative to the base plate. The linkage 18 comprises a lever assembly 30 extending between the pedal and the base plate, a pivot unit 31 connecting the lever assembly to the pedal, a cam mechanism 32 for positioning the lever assembly relative to the pedal and a return spring 33 biasing the lever assembly 30 to its engine idle position.

As can best be seen in FIG. 2 the pivot unit 31 comprises a flange 34 and lug 36 extending from the pedal 20 and containing bearings (not illustrated) and a pivot shaft 42 mounted in the bearings for rotation relative to the pedal. The flange 34 carries the signal generating unit 14 on its front face 48 and includes tapped mounting holes 44 and a circular locating recess 46 on the front face 48. The holes 44 and recess 46 assure accurate alignment of the signal generating unit 14 with the pedal 20.

The shaft 42 transmits motion from the linkage 18 to the signal generating unit 14. The shaft 42 is mounted for low friction rotation in the aligned flange and lug bearings and is fixed to the lever assembly 30. Thus the shaft 42 rotates relative to the flange 34 about an axis 49 when the pedal moves relative to the base plate. The shaft 42 is preferably cylindrical with a tang 50 at one end projecting outwardly beyond the flange face 48 for engagement with the signal generating unit 14.

The lever assembly 30 drives the shaft 42 for actuating the signal generating unit 14. The lever assembly 30 extends between the shaft 42 and the cam mechanism 32 so that as the pedal 20 moves, the cam mechanism 32 and lever assembly 30 control the degree of shaft rotation. The lever assembly 32 comprises a pair of lever members 52 fixed to the shaft 42 and projecting to the cam mechanism 32 at the base plate, a cross member 56 fixed between the lever members and spaced from the shaft, and a return spring 60 (FIG. 2) for biasing the lever members towards their "engine idle" position. The lever members 52 are fixed to the shaft 42 (for example by keys and keyways) at axially spaced locations adjacent the respective confronting sides of the flange 34 and lug 36. The lever members 52 extend parallel to each other toward the cam mechanism with the cross member 56 fixed between them for support. The return spring 60 (schematically shown) is a helical torsion spring encircling the shaft 42 with its opposite ends 62 resiliently engaging and reacting between the pedal 20 and the cross member 56. The spring 60 is coiled to strongly urge the lever members 52 clockwise about the shaft 42 axis 49 (as seen in FIGS. 1 and 2) toward the lever assembly "engine idle" position.

The cam mechanism 32 governs the degree of shaft (42) rotation created by a given pedal movement. The mechanism 32 comprises a cam ramp 63 on the base

plate 22 and a roller follower 64 carried by the lever assembly 30. The cam ramp 63 is illustrated as formed by an upturned base plate end 65 having an embossed cam track 66 extending along its length. The cam follower 64 is formed by a cylindrical roller extending between the lever member ends remote from the shaft 42 and a roller axle 67. The axle 67 is fixed between the lever member ends and carries the roller which is freely rotatable on the axle. The illustrated roller follower 64 provides a wide cylindrical cam following surface which is matched by the wide flat embossed cam track surface on the base plate end 65. The illustrated cam track is formed by a straight, angled ramp on the base plate, but other ramp configurations can be employed to produce shaft rotations varying as desired functions of pedal displacement.

When the pedal 20 is in its "engine idle" position, the roller follower 64 is at an initial position on the cam ramp 63 which is illustrated by FIGS. 1 and 2. As the vehicle operator depresses the pedal 20 both the pedal 20 and the lever members 52 rotate. The pedal 20 rotates in opposition to the spring 29 (clockwise as viewed in FIG. 1) and the lever members 52 rotate in opposition to the spring 60 (counterclockwise as viewed in FIG. 1). The roller follower moves along the cam ramp in a direction "M" (see FIG. 1) and the levers 52 rotate the shaft 42 in the direction of the arrow "R."

When the pedal pressure is relieved, the return spring 60 urges the lever members back toward their initial "engine idle" positions, while the spring 29 returns the pedal to its "engine idle" position. The shaft 42 then turns in the direction opposite to the direction of the arrow "R" (FIG. 1).

The signal generating unit 14 of the present invention is carried by the pedal 20 for providing electric pedal position responsive signals to control the engine. The unit 14 (FIGS. 1 and 3) comprises a housing assembly 70, a signal handling stator assembly 71 anchored in the housing, and a rotor assembly 72 movably supported in the housing and coacting with the stator assembly 71 for generating pedal position responsive signals. The rotor and stator assemblies are disposed in a sealed chamber defined by the housing assembly. The housing assembly 70 is secured to the pedal 20 with the rotor assembly 72 connected to and driven by the shaft 42 for rotation relative to the stator assembly 71. Position signals are generated as the rotor assembly moves relative to the stator assembly. In the preferred construction the housing assembly is clamped to the pedal by screws 73 (FIG. 1) extending through openings in the housing assembly which are aligned with the tapped mounting flange holes 44.

Referring to FIGS. 3 and 4A–C, the housing assembly 70 comprises a cup-like housing member 74 receiving the stator and rotor assemblies, a cover member 76 for the housing member, a terminal connector arrangement 78 and an assembly spring member 80 associated with the cover member for maintaining the stator assembly in position.

The housing member 74 is a relatively high strength, electric insulator molded from plastic or plastic-like material (for example Valox 420). The member 74 forms a cavity 82 defined by a base wall 84 and a surrounding side wall 86. The rotor and stator assemblies are received in the cavity 82 and are accurately positioned with respect to each.

The base wall 84 supports the rotor assembly 72 in a rotor assembly supporting boss structure 92. The boss structure defines a bore 90 aligned with the shaft axis 49 for accurately positioning and securing the rotor assembly radially with respect to the shaft axis. Arcuately curved bearing lands 94 are formed in the base wall 84 adjacent the boss structure 92 for engaging and locating the rotor assembly relative to the shaft axis. The lands 94 project slightly from the wall 84 towards the rotor and define narrow, low friction bearing faces engaged with the rotor assembly.

The stator assembly 71 is fixed against movement both axially and radially relative to the housing assembly. The side wall 86 defines a seat forming shoulder 96 extending partially about the irregularly shaped cavity (82) perimeter at a given distance from the base wall bearing land faces. The stator assembly 71 firmly seats on the shoulder 96 to fix the axial location of the stator assembly in the housing assembly. The stator assembly perimeter shape conforms to the shape of the cavity perimeter and shoulder 96 so that the stator assembly is fixed against any radial or circumferential motion relative to the housing member when seated on the shoulder 96.

The cover member 76 (FIG. 3) both closes the cavity 82 and resiliently clamps the assembly spring member 80 against the stator assembly. The cover member 76 is a flat plate-like member hermetically secured to the housing member 74 at the cavity end remote from the base wall 84 to close the housing assembly chamber. As shown by FIG. 3 the housing side wall 86 defines a cover member seating shoulder 98 disposed a fixed distance from the shoulder 96 near the cavity open end. The cover member 76 is bonded to the shoulder 98 (for example by ultrasonic welding) when the housing assembly is complete. The shoulder perimeter conforms to the cavity perimeter shape and to the perimetral cover member (76) shape to assure a complete and hermetic bond.

The illustrated spring member 80 is formed by a pad of foam plastic or rubber-like material compressed between the cover member and the stator assembly 71. The spring member periphery conforms generally to the cavity shape and thus overlies the stator assembly. The uncompressed pad thickness is appreciably greater than the distance between the cover member and the stator assembly so that the pad resiliently maintains contact with the stator assembly. In addition to its spring function the foam construction cushions the housing assembly against road shocks. Other forms of assembly spring can be employed.

The terminal connector arrangement 78 detachably couples the signal cable 16 to pedal position signal circuitry of the stator assembly. In a preferred embodiment of the invention the cable 16 plugs into the signal generating unit 14. The illustrated terminal connector arrangement 78 (FIGS. 3 and 4A–C) comprises a female socket formation 100 continuous with and projecting from an external face of the side wall 86, a series of terminal pins 102*a–f* hermetically fixed in and extending through the side wall 86 into the cavity 82 for electrical engagement with respective stator assembly circuit elements, and guide structure 104 along the internal face of the side wall 86 for assuring proper alignment between the terminal pins and the stator assembly.

The socket formation 100 extends about the terminal pins 102 and the mating male end of the cable 16 to shield their juncture. A guide slot 106 integral with the socket formation 100 interfits with a key formed on the cable plug (not illustrated) to assure the terminal pins

are properly aligned with the cable plug. Each terminal pin **102** is press fit into a respective conforming preformed side wall (**86**) hole. Terminal pin ends project through the wall **86** into the cavity **82** for making good electrical contact with stator assembly circuit elements when the housing assembly has been completed.

The rotor assembly **72** (See FIGS. **3** and **5**) is mounted for rotation about the axis **49** between the boss structure **92** and the stator assembly **71** and coacts with the stator assembly to create electrical signals indicative of throttle pedal position. The rotor assembly **72** comprises a molded rotor body **110**, position signal transmitting circuit elements **112**, **114**, coupled to the stator assembly, a shaft seal **116**, and a return spring system **118**.

The rotor body **110** carries the position signal transmitting circuit elements **112**, **114** and rotates with the shaft to move the position signal transmitting elements relative to the stator assembly circuitry for producing the position signals. The rotor body comprises a disc-like rotor member **120**, supporting trunnions **122**, **124** projecting from opposite faces of the member **120** along the axis **49**, bearing flanges **126** depending from the rotor member outer periphery for engagement with the bearing lands **94**, and rotor body travel limiting stop elements **128** (See FIG. 5A).

The rotor member **120** is a relatively thin, planar member centered on the axis **49** and defining a pair of generally cylindrically curved outer peripheral sections **130** each having a wing-like projection **132** extending tangentially away from one end. The position signal transmitting elements **112**, **114** are molded into respective projections **132**. Each bearing flange **126** projects from a respective cylindrical rotor body periphery and defines a relatively narrow bearing face engagable with a bearing land **94**. A generally circular channel is defined between the trunnion **124** and the bearing flanges **126** into which a cylindrical housing member boss element **133** surrounding the bore **90** extends (See FIGS. **3** and **4**).

The trunnions **122**, **124** are aligned on the axis **49** and support the rotor assembly for rotation about the axis **49**. The trunnions are respectively received and supported for rotation in the housing member wall bore **90** and in a stator assembly bearing socket **134** (FIG. **3**). The shaft seal **116** is a conventional resilient ring seal seated on a shoulder within the boss element **133** and having faces sealingly engaging the trunnion **122**, the rotor member **120** and the shoulder so that the housing chamber is sealed against the ingress of moisture, dust, etc. along the trunnion **122**. The end of the trunnion **122** projecting from the bore **90** is shaped to provide two parallel blade-like tangs **140** which receive the shaft tang **50** between them. The shaft **42** positively drives the rotor in both directions of rotation because of the relationship between the tangs. Planar semicircular shoulders **142** remain radially outwardly of the tangs **140**.

The stop elements **128** coact with a stop lug **144** (FIG. **4B**) formed on the boss element **133** to limit rotor body rotation. The elements **128** are defined by radially inwardly projecting faces on the bearing flange **126**. The lug **144** is molded continuously with the boss element **133** and the base wall **84** and projects radially outwardly from the boss element. The faces are spaced apart a sufficient distance about the axis **49** to assure that the pedal **20** freely moves the rotor body through the full range of pedal travel. The stop elements limit rotor member motion if the rotor member should move beyond its normal operating range.

The position signal transmitting elements **112**, **114** are electrically coupled to conductive circuit elements on the stator assembly **71** to produce electrical signals whose values vary as a function of the rotor body position relative to the stator assembly **71**. The illustrated position signal transmitting elements are potentiometer wiper elements each respectively engaging and bridging pairs of stator assembly circuit elements forming potentiometers (the stator assembly circuit elements are described in detail below). Referring to FIGS. **3** and **5**, each wiper element is a thin, highly conductive beryllium copper sheet forming first and second resilient contact arms **150**, **152** projecting from the rotor member for resilient engagement with the stator assembly and a bridge **154** extending between the arms. The bridge **154** is molded into the rotor member **120** with the arms projecting from the rotor member. Each arm terminates in a plurality of projecting, curved wiper fingers **156**. The wiper fingers **156** engage electrical resistance material deposited on the stator assembly for producing position related electrical signals. The preferred fingers **156** have gold alloy tips.

The return spring system **118** (FIG. **3**) reacts between the housing assembly and the rotor body **110** to bias the rotor body against movement away from its position corresponding to the "engine idle" throttle pedal position. The spring system **118** thus acts as a return spring in concert with the return springs **29** and **33**. The system **118** additionally fulfills a failsafe role by assuring that the pedal position signal generating unit **14** produces engine idle signals should the shaft **42** and rotor assembly **72** ever be disconnected.

The illustrated spring system **118** comprises a helical torsion spring **160** disposed about the trunnion **122** between a shoulder forming part of the boss structure **92** and a washer-like spring anchor **162** surrounding the trunnion end projecting from the bore **90**. The spring anchor **162** defines a peripheral notch **164** alignable with a radially inwardly extending key element **166** molded into the boss structure **92** (See FIG. **4A**) for securing the spring anchor against rotation with respect to the housing assembly **70**. A finger (not shown) formed at the spring end adjacent the anchor **162** projects through a receiving hole in the anchor so that the spring (**160**) end is fixed with respect to the housing assembly. The opposite end of the spring **160** is defined by a finger projecting into a receiving hole **169** (FIG. **5A**) in the rotor member **120**. The spring **160** is initially stressed by "winding" it about its axis so that when the rotor member is in the "engine idle" position the spring **160** forcefully retains the rotor member in place. As the rotor member moves away from the engine idle position the spring stress increases, strongly resisting the movement.

The stator assembly **71** (FIGS. **3** and **6–8**) is precisely stationed within the housing chamber for coaction with the rotor assembly **72** and the terminal connector arrangement **78** to produce and supply the position signals to the engine controller via the cable **16**. The stator assembly comprises a stator body **180**, a position signal assembly **182** (FIGS. **3**, **7** and **8**) supported by the body and an output signal terminal construction **184** for delivering signals from the assembly **182** to the cable **16**.

The stator body **180** is fixed with respect to the rotor body **110**. The preferred body **180** is a flat plate-like molded plastic member shaped to conform to the cavity

82 and having a face **186** confronting the rotor assembly and seated on the shoulder **96**. The stator body defines a flange **190** extending partially about its periphery along the housing side wall **86** and projecting toward the cover member **76** to define a recessed body face **188** opposite the face **186**. The cover member **76** is seated against the flange **190** to fix the stator assembly in place against the shoulder **96**. A socket-like boss **192** projecting from the face **186** forms the socket **134** which receives and supports the trunnion **124** for rotation about the axis **49**.

The position signal assembly **182** (see FIGS. **7** and **8**) is precisely located on and fixed to the stator body for coacting with the rotor assembly to produce position signals and process and deliver them to the engine controller. The assembly **182** comprises a flexible nonconductive film member **210** anchored to the stator body, circuitry (generally indicated by the reference character **211**) printed or otherwise deposited on the film member, and signal processing circuit components, schematically shown by FIGS. **3** and **8–10** and generally indicated by the reference character **212**, mounted on the member **210** and connected to part of the circuitry **211** for processing pedal position signals.

The film member **210** comprises a position signal generating section **220** (FIG. **7**) fixed to the stator body face **186**, a signal processing circuit supporting section **222** (FIG. **8**) fixed to the face **188** and a terminal section **224** (FIG. **8**) associated with the terminal connector arrangement **78** to provide output signals from the unit **14**.

The position signal generating section **220** is secured to the stator body face **186** in precise alignment with the stator and rotor bodies. The preferred signal generating section defines two pairs of deposited resistance material tracks **230, 232** (FIG. 7A) positioned for engagement by the respective wiper elements **112, 114**, conductors printed in the film material for connecting the track pairs **230, 232** into the signal circuitry, and section alignment structure. The alignment structure comprises film member registration holes **236, 237, 238** which are respectively aligned with corresponding locating holes **240, 241** molded into the stator member and the boss **192**. The holes **236, 240** and **237, 241** are aligned by assembly fixture pins extending through them when the boss **192** extends through the hole **238**. The film member is bonded to the face **186** by a suitable adhesive applied between the face **186** and the film locations beneath the track pairs **230, 232**. When the film member is secured in place the fixture pins are removed. In the preferred unit **14** each track pair **230, 232** is so constructed and arranged that it cooperates with its associated respective signal transmitting circuit element **112, 114** to form a potentiometer. Each track pair comprises a circularly curved resistor pad **250** extending between conductor pad segments **252** (FIG. 7B) at its opposite ends and an adjacent, concentric, radially aligned, circularly curved pad **254** of resistance material deposited on a conductor pad **256** which extends throughout the length of the pad **254**. The wiper arms **150, 152** confront and contact the pads **250** and **254**, respectively. The conductor pads **252, 256** form part of the printed circuitry on the film and are visible from the side of film opposite the resistor pads (see FIG. 7B).

Each pad **250** forms a voltage dropping resistive path between the associated conductor pad segments **252**. When a given voltage is applied across the pad **250** via the pad segments **252** the voltage level existing at the contact point between the arm **150** and the pad **250** indicates the throttle pedal position. That voltage level constitutes a signal which is transmitted through the arm **150**, bridge **154**, arm **152**, pad **254**, the underlying conductor pad **256** and away from the signal generating section **220** via the printed circuitry. Since the conductor pad **256** extends the full length of the resistor pad **254** the voltage drop across the pads **254, 256** is constant regardless of the wiper arm position.

The track pairs **230, 232** are so constructed and arranged that, in cooperation with the elements **112, 114**, the signal generated from the track pair **230** is ratiometrically identical to the signal generated from the track pair **232**. In the preferred and illustrated embodiment of the invention the resistance pads **250** are identical and are displaced **180°** from each other about the axis **49**. The elements **112, 114** are likewise fixed to the rotor body so that the wiper fingers engage the pads **252** at locations spaced **180°** apart. When the rotor body moves about the axis **49** relative to the stator body **180** the voltage signals produced from the track pairs **230, 232** are identical and vary as identical continuous functions of throttle pedal displacement.

The output signal from the track pairs **230, 232** are delivered to the signal processing circuit supporting section **222** via conductors printed on the film member **210**. Voltage supply leads printed on the film member **210** likewise connect the conductor pads **254** associated with the track pairs **230, 232** to the section **222**. The sections **220, 222** are attached to each other via a hinge-like bridge **260** of the film material on which the voltage signal and supply conductors are printed and which wraps around a side of the stator member **180**.

The signal processing circuit supporting section **222** (FIGS. **3** and **8**) is aligned with and bonded or otherwise adhered to the stator face **188**. The section **222** defines a locating hole **262** receiving an alignment pin **264** projecting from the face **188**. The signal processing circuit elements project away from the face **188**. The flange **190** projects from the level of the face **188** slightly beyond the signal processing circuit (**212**) elements. The elements are lightly engaged by the assembly spring pad **80**. The voltage signal input to the signal processing circuitry **212** is processed in a manner described presently and output signals from the processing circuitry are delivered to the film member terminal section **224**.

The film member sections **222** and **224** are connected by a hinge-like bridge **270** which flexes to enable assembly of the sections **222, 224** to the stator body. The bridge **270** carries printed conductors extending between the terminal section **222** and the sections **220, 224**.

The terminal section **224** is secured to and forms part of the terminal construction **184** with the printed conductors forming terminal pads **272***a–f* each electrically connected to a respective terminal pin **102***a–f*. The terminal construction **184** comprises a stator body flange **276** (FIG. **8**) projecting from the plane of the face **186** and along the side wall **86** in the guide structure **104** and a retainer plate **280** (FIG. **3**) for clamping the terminal section **224** in place for making electrical connections with the terminal pins.

The stator body flange **276** is molded integrally with the stator body **180**. The flange **276** extends at a right angle with respect to the face **186**. Locating pins **282** project from the body flange toward the side wall **86** for aligning the retainer plate and the film member terminal section **224** with the flange.

The retainer plate **280** aligns the film member terminal section **224** with the terminal pins while providing for electrical contact between the terminal pins and the terminal pads **272**. The illustrated retainer plate is a rectangular molded plastic member having holes for receiving the alignment pins **282**, parallel slots **290** (FIG. **3**) aligned with and disposed between the terminal pads and the terminal pins, and elastomeric electrical connectors **292** supported in the slots and engaged with the pads **272** and pins **282**.

Terminal construction assembly is completed by flexing the film member terminal section **224** into face contact with the body flange **276** and fitting a central alignment pin **282** through a conforming hole in the section **224**; pressing the retainer plate onto the pins **282** and into clamping engagement with the film section **224**; and positioning the stator assembly **71** in the cavity **82** with the flange **276** and retainer plate in the guide structure **104**. The terminal pins **102***a–f* extend into resilient engagement with the connectors **292** which in turn are resiliently urged into engagement with the pads **272**. The connectors **292** are each formed from an elongated rectangular body of resilient rubber-like electrical insulating material containing encapsulated strips of electrically conductive material (such as silver foil) extending parallel to each other between opposite faces of the connector from the terminal pads **272** to the terminal pins **102**. The conductive strips are insulated from each other by the connector body material so that the only conduction taking place through the connector occurs directly between each terminal pad **272***a–f* and the associated one of the connector pins **102***a–f*.

The output signal from the track pair is directly output to the engine controller via the cable **16**. This output signal (identical to the signal indicated by the reference character **329** of FIG. **12**A) is an analog continuously variable signal corresponding to throttle pedal position. The output signal from the track pair **232** is identical and is indicated by the reference character **329** of FIG. **12**A. The signal **329** is fed to the signal processing circuity **212** to produce complementary, logic output signals used by the engine controller to validate the output signal from the track pair **230**. The logic output signals are graphically depicted by FIGS. **12**B and **12**C.

FIG. **9** is a schematic diagram of the circuitry **211** and the signal processing circuitry **212**. The DC power input **318** is electrically coupled to the conductive film element **250** of the track pair **230** which, in turn, is coupled to a grounding member **319**. The wiper arm **150** acts as a voltage divider for the voltage drop across the film element **250**. This pedal position signal, taken off the wiper arm **150**, is input to the engine electronic control module.

A second DC power input **320** is electrically coupled to the conductive film element **250** of the track pair **232** and which, in turn, is coupled to a grounding member **352**. The wiper arm **150** of the element **114** functions as a voltage divider for the voltage drop across the film element **250**. The position of the wiper arm **150** along the film element **250** is dependent upon the position of the throttle pedal **20**. The signal **329**, is taken off the wiper arm **150** and input to the circuit **212** as will be described in detail with regard to FIGS. **10** and **11**. The idle validation circuitry **212** generates the complementary signals **374**, **376** (Sig **2** and Sig **3** of FIGS. **12**B and **12**C) which are input to the engine electronic control module.

Turning to FIG. **10**, the idle validation signal generation circuit **212** includes the power input **320** coupled to the film element **250** through a diode **322** which protects the circuit **212** against reverse polarity connection of the power input. Noise suppression and voltage limiting is performed by the combination of a capacitor **324** and zener diode **326** which are also connected to the input **320**. A typical voltage at the input **320** is plus five volts DC.

The 5 volt input **320** is applied across the film element **250** and a voltage output from the wiper arm **150** is coupled through a resistor **330** and connected to a non-inverting input (+) to a comparator **340**. The signal **329** and the non-inverting input varies with the position of the throttle pedal **20** so that when the pedal is in the idle range, a particular voltage will be output through the wiper arm **150**. The signal at the non-inverting input to the comparator amplifier **340**, is also connected through a resistor **341** to an inverting input (−) to a second comparator **342**.

Each of the two comparators **340**, **342** includes a reference input **350** that defines a switching point for outputs **344**, **346** from the comparators **340**, **342**. The reference input **350** is connected to an inverting input of the comparator **340** and is derived from a voltage divider coupled across the power input **320** and a ground connection **352**. In the disclosed embodiment of the invention, this reference input **350** is held at a voltage of approximately one volt. Since the disclosed embodiment of the present invention is for monitoring an idle transition point for a throttle actuator, this value corresponds to the signal output **329** from the wiper arm **150** when the idle-non-idle threshold position is reached during depression of the pedal **20**. The same voltage is applied to the non-inverting input of the second comparator amplifier **342**.

The output signals **344**, **346** are complementary and are coupled to base inputs of two switching transistors **360**, **362**. The base inputs to these switching transistors **360**, **362** are biased by two pull-up resistors **364**, **366** to maintain the transistors in an OFF condition. When one of the outputs **344**, **346** goes low, the associated transistor is biased into conduction and pulls an associated output at the transistor's collector high. As an example, when the switching transistor **360** is biased into conduction by a low signal at the output **344**, the transistor's collector **370** which is connected to ground through a resistor **367**, is pulled high. In a similar fashion, a collector **372** is also connected to ground through a resistor **369**. The transistor **362** responds to outputs from the comparator **342** on the output **346**. Two complementary outputs **374**, **376** (Sig **2** and Sig **3**) are connected through terminal pins **272***e*, **272***f*, and the cable **16** to the engine electronic control module to validate the throttle pedal position output signal.

As seen in FIGS. **12**B and **12**C, the outputs **374**, **376** are complementary. A high output from the comparator **340** assures the signal at the inverting (−) input to the comparator **342** is greater than the input **350** and comparator **342** will have a low output **346**.

As the throttle pedal **20** moves back and forth from the idle to non-idle ranges, the switch-on (or idle-non-idle) transition point changes depending on which direction the pedal **20** is moving. This hysteresis is needed to avoid output oscillation at the switch point. Assume the output **344** is low. This corresponds to a condition where the reference input **350** is greater than the signal from the wiper arm **150** and the throttle pedal is in the

idle zone. When the output changes state, a five volt signal is coupled to the resistor **341** from the output **344**. The five volt signal pulls up the voltage at the non-inverting input to the comparator **340** to a level greater than the level it would reach from its connection to the wiper arm **150**. Since the reference input **350** is fixed, the voltage at the wiper connection must be lower than the voltage that caused the output **344** to go high. In a preferred embodiment, the voltage must be 1% lower.

An alternate circuit **212'** for generating complementary idle validation signals is depicted in FIG. **11**. In this Figure, no power input, such as the input **320** shown in FIG. **10**, is used. The signals applied across the conductive film element **250** are provided by one of two diodes **412, 414** having anodes coupled to a 5-volt source outside the housing assembly **70**.

A power bus **432** in FIG. **11** has been labeled +V since the output at that connection is coupled to one or the other of the two complementary outputs from the comparator amplifiers **420, 430**. The +V signal on the bus **432** is applied across two voltage dividers **434, 436**. The first voltage divider **434** has an input **440** to a buffer amplifier **442** which applies its output **444** across the conductive film **250**. The second voltage divider **436** has an input **450** to a second buffer amplifier **452** having an output **454** connected to an opposite end of the resistive element **250**. The resistance values of the two voltage dividers **434, 436** is such that only a percentage of the positive voltage at the bus **432** is applied across the wiper element. This reduces current through the wiper arm **114** and thereby reduces the power consumption of the circuit **212'**. The signal output **329'** at the wiper arm **114** is connected through a resistor **460** to the two comparator amplifiers **420, 430**. These comparator amplifiers have reference inputs coupled to outputs **444, 454** from the buffer amplifiers **442, 452** through voltage divider resistors **462, 464** so that the same signal used to energize the conductive film element **250** is used in defining the reference inputs to the comparators **420, 430**.

Two outputs **470, 472** from the comparators are connected to associated field effect transistors **474, 476**. Pull-up resistors **478, 480** maintain the gate inputs to these field effect transistors **474, 476** at high levels absent a low output from the comparator amplifiers **420, 430**. When a comparator produces a low output, this output is coupled to the gate of an associated field effect transistor. When the field effect transistor **474** conducts, the signal **374'** goes low. When the transistor **476** conducts, the signal **376'** goes low. Since the signals **374', 376'** are complementary, one is high and one is low.

A feedback resistor **444** connected between the output **470** and non-inverting input (+) of the comparator **420** to provide hysteresis in the same manner as the hysteresis described above concerning FIG. **10**.

While preferred embodiments of the invention have been illustrated and described in detail, the present invention is not to be considered limited to the precise constructions disclosed. Various adaptations, modifications and uses of the invention may occur to those skilled in the art to which the invention relates and the intention is to cover hereby all such adaptations, modifications and uses which fall within the spirit or scope of the appended claims.

We claim:

1. A unit for providing signals indicative of the position of an engine throttle member comprising:

a) a housing assembly associated with an engine throttle member and defining a chamber for a stator assembly and a rotor assembly, said stator assembly fixed against movement with respect to said housing and said rotor assembly coupled to said throttle member for movement with respect to said stator assembly in relation to movement of said throttle member;

b) said rotor and stator assemblies electrically coupled together for producing first and second continuously variable, ratiometrically identical signals whose values depend upon the position of said throttle member;

c) transmission circuitry for delivering said first signal from said housing assembly for use in controlling the engine operation; and,

d) processing circuitry for processing said second signal and producing a throttle position validation signal having a first value when said throttle member is in an engine idle range of positions, said processing circuitry producing a validation signal having a second value when said throttle member moves beyond said idle range of positions.

2. The unit claimed in claim **1** wherein said processing circuitry comprises second signal responsive elements for generating dual, complementary validation signals.

3. The unit claimed in claim **1** wherein said rotor assembly and said stator assembly form parts of a throttle position signal circuit, said throttle position signal circuit connected across a voltage source, said stator and rotor assemblies forming parts of a second throttle position circuit connected across a second voltage source separately from said first throttle position circuit.

4. The unit claimed in claim **1** wherein said signal processing circuitry further comprises circuit elements for maintaining said signal processing circuitry conditioned to produce a validation signal having said second value when said throttle member moves from beyond said idle range of positions a predetermined amount back into said idle range of positions.

5. The unit claimed in claim sensor of claim **3** wherein the first and second throttle position circuits each comprises a resistive path electrically connected across a voltage source and a wiper element engaging said resistive path, one of said wiper element and resistive path fixed with respect to said rotor assembly and the other of said wiper element and resistive path fixed with respect to said stator assembly, said wiper element and said resistive path moving relative to each other to produce one of said first and second signals.

6. The unit claimed in claim **1** wherein said processing circuitry for said second signal comprises an electronic switching element having a first reference input defining a switch point therefor and a second input for receiving said second signal, said switching element having a first state for producing a validation signal having one value when said reference input has a higher value than said second signal, said switching element changing state when said second signal value exceeds the value of said reference input.

7. A unit for providing signals indicative of the position of an engine throttle member comprising:

a) a housing assembly associated with an engine throttle member and defining a chamber for a stator assembly and a rotor assembly, said stator assembly fixed against movement with respect to said

housing and said rotor assembly coupled to said throttle member for movement with respect to said stator assembly in relation to movement of said throttle member;

b) said rotor and stator assemblies electrically coupled together for producing first and second signals having values depending upon the position of said throttle member; and,

c) processing circuitry for processing said second signal and producing a throttle position validation signal having a first value when said throttle member is in an engine idle range of positions, said processing circuitry producing a validation signal having a second value when said throttle member moves beyond said idle range of positions

d) said housing assembly supporting said rotor assembly for rotation with respect to an axis extending into said housing assembly and comprising structure for preventing said rotor assembly from shifting axially or radially relative to said axis, said housing assembly comprising elements for engaging said stator assembly and fixing said stator assembly against motion relative to said axis;

e) said stator assembly comprising a stator body and a film member, said stator body having one face confronting the rotor assembly and a second face, said film member comprising a throttle position signal generating section precisely positioned on and fixed to said one face and a signal processing circuit supporting section positioned on and fixed to said second face, said film member sections joined by a flexible hinge-like film member bridge having conductors printed thereon.

8. The unit claimed in claim **7** wherein said stator member further comprises a terminal construction including a stator body flange extending transverse to said first face, said film member comprising a terminal section secured to said stator member flange and defining electrically conductive terminal pads deposited thereon, said terminal pads electrically connected to said signal processing circuit and said throttle position signal generating section by conductive material deposited on said film member.

9. The unit claimed in claim **8** wherein said terminal section is connected to said signal processing circuit supporting section and said throttle position signal generating section by a flexed hinge-like bridge of said film material.

10. A method of controlling an engine by generating throttle member position signals and producing signals for validating the throttle member position signal comprising the steps of:

a) connecting first and second substantially identical paths of resistive material into separate circuits having substantially identical source voltages;

b) coupling first and second conductive wiper elements to the throttle member in precise alignment with said first and second paths and moving said first and second wiper elements across said respective first and second paths of resistive material in strict accordance with movement of said throttle member;

c) producing first and second continuously variable signals from said respective wiper elements, the first and second signals having values corresponding to throttle member positioning;

d) utilizing said first signal for operating the engine in relation to the throttle member position; and,

e) processing the second signal to produce a digital signal to enable validating the first signal, comprising producing a first digital validation signal value when said second signal indicates said throttle member is in an "idle" range of positions and producing a second digital signal value when said second signal indicates the throttle member has moved beyond the "idle" range of positions.

11. The method of claim **10** wherein processing the second signal further comprises creating a second, complimentary digital idle validation signal.

12. The method of claim **10** further comprising disabling the engine from operating at speeds greater than idle speed unless and until the validation signal value corresponds a throttle member position beyond the "idle" range of positions.

* * * * *