IN THE UNITED STATES PATENT AND TRADEMARK OFFICE

_____

BEFORE THE PATENT TRIAL AND APPEAL BOARD

_____

INTERACTIVE COMMUNICATIONS INTERNATIONAL, INC.,

Petitioner,

v.

BLACKHAWK NETWORK INC.,

Patent Owner.

_____

Case No. IPR2023-01235

U.S. Patent No. 9,865,135

_____

PETITION FOR *INTER PARTES* REVIEW
OF U.S. PATENT NO. 9,865,135

TABLE OF CONTENTS

I. Introduction 1

II. Standing 2

III. Identification of Challenge And Relief Requested 2

IV. Level Of Ordinary Skill In The Art 2

V. State of the Art 3

A. Early POS Activation Systems 3

B. Expanded Use of POS Activation Systems 4

C. Sale of Lottery Tickets 5

VI. The ’135 patent 8

A. Overview 8

B. Prosecution History of the ’135 patent 8

C. PGR2020-00084 9

VII. Overview Of The Prior Art 10

A. Szrek (Ex. 1005) 10

B. Llach (Ex. 1006) 12

VIII. Claim Construction 13

A. “transaction processor” 13

B. “data package” 18

IX. Detailed Explanation of Invalidity Grounds 19

A. Ground 1: Claims 1-6 are Unpatentable Over Szrek 19

1. Claim 1 20

2. Claim 2 35

3. Claim 3: The method of claim 1 or 2, further comprising transmitting the draw details by the lottery administration system, wherein transmitting the draw details generating at the lottery administration system an image or data package containing at least the draw details. 43

4. Claim 4 45

5. Claim 5 49

6. Claim 6 52

B. Ground 2: Claims 1-6 are Unpatentable over Llach and Szrek 54

1. Rationale to Combine Llach and Szrek 55

2. Claim 2 59

3. Claim 1 66

4. Claim 3: The method of claim 1 or 2, further comprising transmitting the draw details by the lottery administration system, wherein transmitting the draw details generating at the lottery administration system an image or data package containing at least the draw details. 66

5. Claim 4 67

6. Claim 5 70

7. Claim 6 73

X. Mandatory Notices And Fees 74

A. Real Party-In-Interest 74

B. Related Matters 74

1. Related Patent Office Proceedings 74

2. Related Litigation 75

C. Counsel and Service Information 75

D. Payment of Fees 76

XI. Conclusion 76

EXHIBIT LIST

Ex.	Description
1001	U.S. Patent No. 9,865,135 ("'135 patent")
1002	File History for U.S. Patent No. 9,865,135
1003	Declaration of Michael Hutton
1004	*Curriculum Vitae* of Michael Hutton
1005	U.S. Patent No 7,627,497 (Szrek)
1006	U.S. Pat. Pub. No. 2013/0441768 (Llach)
1007	*Interactive Communications International, Inc., v. Blackhawk Network Inc.*, PGR2020-00084, Paper 2 (Petition for Post-Grant Review of U.S. Patent 10,769,894)
1008	*Interactive Communications International, Inc., v. Blackhawk Network Inc.*, PGR2020-00084, Paper 47 (Final Written Decision)
1009	*Blackhawk Network, Inc. v. Interactive Communications International, Inc.*, 2022-1650, Dkt. 43 (Fed. Cir. June 7, 2023)
1010	U.S. Patent No. 5,511,114 (Stimson-I)
1011	U.S. Patent No. 5,577,109 (Stimson-II)
1012	U.S. Patent No. 5,777,305 (Smith-I)
1013	U.S. Patent No. 6,000,608 (Dorf)
1014	U.S. Patent No. 6,454,165 (Dawson)
1015	U.S. Patent Publication No. WO 01/059597 (Tidball)
1016	U.S. Patent No. 7,024,807 (Street)
1017	U.S. Patent No. 8,706,630 (Graves)
1018	U.S. Patent No. 7,093,761 (Smith-II)

1019	U.S. Patent No. 7,344,067 (Beck)
1020	U.S. Patent No. 8,083,133 (Seifert)
1021	U.S. Patent Publication No. US 2010/0051691 (Brooks)
1022	U.S. Patent No. 8,862,504 (Sobek)
1023	U.S. Patent No. 8,424,758 (Esslinger)
1024	U.S. Patent Publication No. 2004/0193464 (Szrek Publication)
1025	U.S. Patent No. 10,296,895 (Llach)
1026	U.S. Patent No. 6,899,621 (Behm)
1027	U.S. Patent No. 6,267,670 (Walker)
1028	U.S. Patent Publication No. 2009/0163263 (Herndon)
1029	U.S. Patent Publication No. 2005/0233797 (Gilmore)
1030	Intentionally Left Blank
1031	Intentionally Left Blank
1032	*Interactive Communications International, Inc., v. Blackhawk Network Inc.*, PGR2020-00084, Paper 30 (Petitioner's Reply to Patent Owner's Response)
1033	File History for U.S. Patent No. 10,769,894

LIST OF CHALLENGED CLAIMS

Claim	Limitation
1[pre]	A method of providing a lottery ticket for a random draw comprising:
1[a]	scanning at a point-of-sale (POS) terminal a pre-printed lottery ticket to obtain unique identification information and product information from the pre-printed lottery ticket;
1[b]	transmitting the unique identification information and product information from the POS terminal to a lottery administration system;
1[c]	receiving at the POS terminal payment confirmation;
1[d]	transmitting payment confirmation from the POS terminal to the lottery administration system;
1[e]	receiving at the POS terminal from the lottery administration system draw details associated with the pre-printed lottery ticket; and
1[f]	printing the draw details on a receipt.
2[pre]	A method of providing a lottery ticket, for a random draw comprising:
2[a]	scanning at a point-of-sale (POS) terminal a pre-printed lottery ticket to obtain unique identification information and product information from the pre-printed lottery ticket;
2[b]	transmitting the unique identification information and product information from the POS terminal to a transaction processor;
2[c]	transmitting the unique identification information and product information from the transaction processor to a lottery administration system;

Claim	Limitation
2[d]	receiving at the POS terminal payment confirmation;
2[e]	transmitting payment confirmation from the POS terminal to the transaction processor;
2[f]	transmitting payment confirmation from the transaction processor to the lottery administration system;
2[g]	receiving by the transaction processor from the lottery administration system draw details associated with the pre-printed lottery ticket;
2[h]	receiving at the POS terminal from the transaction processor draw details associated with the pre-printed lottery ticket; and
2[i]	printing the draw details on a receipt.
3	The method of claim 1 or 2, further comprising transmitting the draw details by the lottery administration system, wherein transmitting the draw details generating at the lottery administration system an image or data package containing at least the draw details.
4[pre]	A lottery administration system comprising:
4[a]	at least one communication interface for communicating with other computing systems; at least one processing unit for executing instructions; and at least one memory unit for storing instructions, which when executed by the at least one processing unit configure the lottery administration system to provide a method of generating a lottery ticket for a random draw, wherein the method of generating a lottery ticket for a random draw comprises
4[b]	receiving at the lottery administration system unique identification information from a pre-printed lottery ticket,

Claim	Limitation
4[c]	determining at the lottery administration system draw information for a subsequent draw being held,
4[d]	associating at the lottery administration system the determined draw information with the unique identification information,
4[e]	receiving at the lottery administration system payment confirmation;
4[f]	and transmitting from the lottery administration draw details.
5[pre]	A point-of-sale (POS) terminal comprising:
5[a]	at least one communication interface for communicating with other computing systems; at least one scanning component; at least one processing unit for executing instructions; and at least one memory unit for storing instructions, which when executed by the at least one processing unit configure the POS terminal to provide a method of providing a lottery ticket for a random draw, wherein the method of providing a lottery ticket for a random draw comprises
5[b]	scanning at the POS terminal a pre-printed lottery ticket to obtain unique identification information and product information from the pre-printed lottery ticket,
5[c]	transmitting the unique identification information and product information from the POS terminal to a lottery administration system,
5[d]	receiving at the POS terminal payment confirmation, transmitting payment confirmation from the POS terminal to the lottery administration system,
5[e]	receiving at the POS terminal from the lottery administration system draw details associated with the pre-printed lottery ticket,
5[f]	and printing the draw details on a receipt.

Claim	Limitation
6[pre]	transaction processor comprising:
6[a]	at least one communication interface for communicating with other computing systems; at least one processing unit for executing instructions; and at least one memory unit for storing instructions, which when executed by the at least one processing unit configure the transaction processor to provide a method of providing a lottery ticket for a random draw, wherein the method of providing a lottery ticket for a random draw comprises
6[b]	scanning at a point-of-sale (POS) terminal pre-printed lottery ticket to obtain unique identification information and product information from the pre-printed lottery ticket,
6[c]	transmitting the unique identification information and product information from the POS terminal to the transaction processor,
6[d]	transmitting the unique identification information and product information from the transaction processor to the lottery administration system,
6[e]	receiving at the POS terminal payment confirmation,
6[f]	transmitting payment confirmation from the POS terminal to the transaction processor,
6[g]	transmitting payment confirmation from the transaction processor to the lottery administration system,
6[h]	receiving by the transaction processor from the lottery administration system draw details associated with the pre-printed lottery ticket,
6[i]	receiving at the POS terminal from the transaction processor draw details associated with the pre-printed lottery ticket,
6[j]	and printing the draw details on a receipt.

I. INTRODUCTION

Interactive Communications International, Inc. ("InComm" or "Petitioner") respectfully requests *inter partes review* of claims 1–6 (the "Challenged Claims") of U.S. Patent No. 9,865,135 (the "'135 patent") pursuant to 35 U.S.C. §311 and 37 C.F.R. §42.100.

The Board has already found a continuation of the '135 patent to be unpatentable. Specifically, U.S. Patent No. 10,769,894 (the "'894 patent") was subject to a post-grant review proceeding, where the Board found nearly all claims of the '894 patent unpatentable as obvious in view of Szrek alone. *See* PGR2020-00084, Paper 47 (Ex. 1008). The Federal Circuit recently affirmed the Board's decision, holding that the Board's findings were supported by substantial evidence. *See* Ex. 1009.

The claims of both the '894 patent and the challenged '135 patent are directed to the same subject matter. Specifically, the claims of both the challenged patent and the '894 patent are directed to conventional point of sale (POS) systems that sell and activate lottery tickets (as well as other physical substrates, such as gift cards or coupons). Indeed, that the '894 patent's claims are obvious variants to the challenged claims is evidenced by the double patenting rejection issued during prosecution of the '894 patent, and the terminal disclaimer the applicants filed to overcome that rejection. As demonstrated below, Szrek renders obvious each and

every limitation of the Challenged Claims, for the same reasons as the Board found Szrek rendered obvious the claims of the ’894 patent. Where appropriate, this petition cites to the Board’s reasoning in PGR2020-00084, but independently analyzes the prior art against the challenged claims.

In the alternative, all of the Challenged Claims are rendered obvious by Llach, which discloses a system for activating stored value cards (*i.e.* prepaid gift cards), modified in view of Szrek to support activating pre-printed lottery tickets in accordance with Szrek. The Llach/Szrek ground was presented but not considered during the PGR.

II. STANDING

Petitioner certifies that the ’135 patent is available for IPR and that Petitioner is not barred or estopped from presenting the grounds identified in this Petition.

III. IDENTIFICATION OF CHALLENGE AND RELIEF REQUESTED

Petitioner requests cancellation of claims 1–6 on the following grounds:

Ground	Reference(s)	Basis	Claims
1	Szrek	§103	1-6
2	Llach, Szrek	§103	1-6

IV. LEVEL OF ORDINARY SKILL IN THE ART

A person of ordinary skill in the art (“POSITA”) in January 2015 is an artisan with a working knowledge of POS activation systems and lottery systems that was gained through a mixture of training and work experience in the relevant field such

as (i) having a Bachelor's degree in computer science, computer communications, electrical engineering, or equivalent degree, coupled with at least three years of work experience; (ii) having a Master's degree in computer science, computer communications, or electrical engineering, but having less work experience; or (iii) having no formal degree, but having experience in the relevant field of at least six years of work experience. Ex. 1003, ¶13. Petitioner's expert, Mr. Hutton, exceeds this definition. *Id.*, ¶14. The Board adopted this level of skill in PGR2020-00084. Ex. 1008, 11.

V. STATE OF THE ART

A. Early POS Activation Systems

Point of sale activation systems have been in use for years. Ex. 1003, ¶¶27-28. A consumer purchases a physical substrate, such as a card or lottery ticket, that encodes identifying and other information in a barcode or magnetic stripe. Ex. 1003, ¶29. The indicia has no value until the time of sale when it is activated through the retailer's existing POS system by scanning and transmitting the encoded information to a remote processor. Ex. 1003, ¶¶30-31. The remote processor returns a message indicating whether the indicia has been activated along with other information relevant to the transaction. Ex. 1003, ¶32.

Such activation systems began in the early 1990's in connection with prepaid phone cards. Ex. 1003, ¶33. Before, prepaid phone cards were distributed to retailers

in an "active" state, meaning they could be used immediately with no additional processing, which were frequent targets of theft. Ex. 1003, ¶¶34-35; Ex. 1013, 1:59-62.

POS activation systems were developed to allow "inactive" prepaid phone cards to be "activated" at the time of purchase. Ex. 1003, ¶36. Stimson-I describes an early example: "[p]re-paid calling card services [were] well-known in the art" but that such cards were "batch-activated by the card provider" prior to distribution. Ex. 1010, 1:12; 1:24-25. Stimson-I's invention was to "provide a telephone pre-paid calling card system that includes on-site activation of calling cards," including "point-of-sale activation of calling cards using data terminals connectable to a host computer." Ex. 1010, 1:60-66; Ex. 1003, ¶37. This was done by scanning a barcode on the card, sending an activation request that included the card's number and balance, verifying the transaction, and activating the card. Ex. 1003, ¶¶37-39; Ex. 1010, 4:16-23, 5:42-60, 5:5-14.

B. Expanded Use of POS Activation Systems

From prepaid phone cards, use of POS activation systems quickly expanded to other types of prepaid instruments, including gift cards and lottery tickets. Ex. 1003, ¶40. For example, in Stimson-II, a CIP of Stimson-I, the POS activation system worked identically to the POS activation system of Stimson-I, but included the activation of prepaid "debit cards, smart cards, or any other type of purchasing

card which is currently available or may in the future become generally available." Ex. 1011, 6:20-44.; Ex. 1003, ¶¶40-41.

Smith-I describes another POS activation system for activating prepaid cards at the time of sale. Ex. 1012, 2:62-64; Ex. 1003, ¶¶42-48. To activate the cards, a customer would choose the "prepaid debit card having the desired dollar value, and take[] it to the cash register at the point of sale." Ex. 1012, 7:2-5. There, the magnetic stripe on the card would be swiped and the "identification number of the prepaid debit card together with an activation request" would be communicated to a "host computer" located "at a remote location." Ex. 1012, 7:22-29. Upon receipt of the information, the host computer would activate the card using the provided information. Ex. 1012, 7:31-54. POS activation has since become ubiquitous. Exs. 1006, 1013-1023, 1025; Ex. 1003, ¶¶49-63.

C. Sale of Lottery Tickets

Lotteries have been in existence for hundreds of years. Ex. 1003, ¶64. In a random draw lottery, a player purchases a ticket containing self-picked or computer-picked numbers for a future lottery draw event that compares the winning number(s) with the ticket's numbers. *Id.*

The '135 patent alleges that lottery tickets were only available through "single checkout lane environments such as convenience stores and gas stations" and not through "multi-lane environments such as grocery stores, discount and big box

retailers." Ex. 1001, 1:48-52. According to the '135 patent, this means consumers would have to make a "second stop" at the "lottery terminal location in order to purchase the lottery draw ticket." Ex. 1001, 1:52-56. To the contrary, POS terminals were well-known to activate lottery tickets in the same way as other prepaid instruments. Ex. 1005, Abstract. Szrek, as discussed herein, describes such a system. Ex. 1003, ¶¶65-66.

Behm describes another lottery POS activation system. Ex. 1003, ¶¶67-68. The invention of Behm "integrates the retail functions of modern point of sale systems' with a "pre-printed lottery game ticket dispensing system." Ex. 1026, 3:55-61. A "game player traveling through the store while shopping will pick up at least one lottery game token ... and take the token with them to the POS terminal where the token is presented to a sales clerk for being scanned thereat with the other items purchased." Ex. 1026, 4:21-25.

Behm also specifically addresses "on-line" lottery games wherein "preprinted lottery game ticket[s]" have a "bar-code printed on the back of the ticket" that "is scanned by the ticket dispenser bar code reader and forwarded" to an "offsite lottery computer in the form of a new 'Ticket Activation Message.'" Ex. 1026, 14:5-23. Thereafter, the "the lottery computer records the ticket validation number and authorizes the ticket so that the game ticket is now 'live,' and in play." Ex. 1026, 14:24-27.

Walker also describes another lottery ticket activation system. Ex. 1003, ¶69. According to Walker, the retailer's POS terminals, which "communicate with a lottery data processing system," perform "lottery transactions in addition to merchandise transactions." Ex. 1027, 2:63-3:1. If a consumer wishes to purchase a lottery ticket along with other merchandise, a "lottery ticket request" is sent from the POS terminal and received by "the lottery data processing system, which carries out the lottery transaction." Ex. 1027, 3:1-8. The "lottery data processing system then transmits lottery ticket information back to the POS terminal, which prints "out a single sales receipt containing both lottery ticket information and information concerning the merchandise being purchased." Ex. 1027, 3:8-13.

Herndon describes a multiple in-lane lottery ticket sales system, wherein "[l]ottery customers present a bar coded or otherwise machine-readable lottery 'token' to the cashier," which token "may be any type of readable device, such as a coupon, ticket, chip, and so forth," and which "is scanned using the point-of-sale terminal and the in-lane lottery sales computing device" which sends "lottery data" to "a centralized lottery system for handling the request," and where "there is no lottery-specific software running on the retail point of sale system or terminals." Ex. 1028, [0009]; Ex. 1003, ¶70.

Gilmore describes a system for selling tickets through a retailer POS system by scanning said tickets. Ex. 1029; Ex. 1003, ¶71. A lottery system controller 12

receives the data from the scan and sends an activation request to the lottery system. The lottery system 28 confirms the lottery numbers are recorded, and the controller 12 provides confirmation to the POS system.

VI. THE '135 PATENT

A. Overview

U.S. Pat. No. 9,865,135 (the "'135 patent") is directed to "[a] system and method of selling pre-printed lottery tickets for random draw lotteries through the retailers POS without the use of additional lottery hardware." Ex. 1001, Abstract; Ex. 1003, ¶80. As claimed, the POS terminal scans a barcode on a preprinted ticket and sends the encoded information to a lottery administration system. The POS terminal also confirms payment and sends said confirmation to the lottery administration system as well. The lottery administration then sends information about the lottery draw to the POS, which prints that information on a receipt. The '135 patent also claims a similar system where data that travels between the POS terminal and the lottery administration system does so via an intermediary transaction processor.

B. Prosecution History of the '135 patent

The '135 patent was filed April 6, 2015 as Application No. US14/679,028. Ex. 1001. The applicant successfully argued that the prior art cited by the examiner failed to disclose a "pre-printed lottery ticket." Ex. 1002, 75-76. As a result, the

claims of the ’135 patent were allowed. *Id.*, 59. The examiner did not cite or consider the Szrek or Llach references. Ex. 1003, ¶81.

C. PGR2020-00084

On December 6, 2017, applicant filed continuation application number 15/833,566 based off parent application 14/679,028 (*i.e.* the ’135 patent’s application). This application issued as U.S. Patent No. 10,769,894 (the “’894 patent”). During the prosecution of the ’894 patent, the applicant filed a terminal disclaimer to overcome a double patenting rejection in view of the ’135 patent. Ex. 1033, 158.

Petitioner filed a petition for post-grant review against the ’894 patent after it issued, PGR2020-00084. PGR2020-00084, Paper 2 (Ex. 1007). Petitioner argued in that case that the claims of the ’894 patent were obvious in view of Szrek alone or Llach in view of Szrek. The Board instituted and, on March 15, 2022, issued a Final Written Decision finding all challenged claims to be unpatentable in view of Szrek. Ex. 1008. The Board declined to decide whether the challenged claims were also unpatentable in view of Llach and Szrek. *Id.*, 24. The Federal Circuit upheld the Board’s decision in a non-precedential opinion, holding that the Board’s findings were supported by substantial evidence. *Blackhawk Network, Inc. v. Interactive Communications International, Inc.*, 2022-1650, Dkt. 43 (June 7, 2023) (Ex. 1009).

The claims of the ’135 patent are substantively similar to the claims of the ’894 patent that were found to be unpatentable over Szrek. Like the ’135 patent, the ’894 patent claims recite a system where a POS terminal scans a barcode of a preprinted lottery ticket, sends identifying and product information and payment confirmation to a lottery administration system, and receives information about the random draw which is printed on a receipt. Ex. 1003, ¶¶82-88. The ’894 patent also describes that the information sent between the POS system and lottery administration system is sent via an intermediary transaction processor. The Board found that all of these limitations in the ’894 patent that are substantively identical to the claims in the ’135 patent were disclosed or rendered obvious by Szrek.

VII. OVERVIEW OF THE PRIOR ART

A. Szrek (Ex. 1005)

U.S. Patent No. 7,627,497 to Szrek issued on December 1, 2009 from an application filed March 22, 2004. Thus, Szrek is prior art under 35 U.S.C. §102(b). Szrek was not cited or applied by the examiner during prosecution of the Challenged Claims.

Szrek discloses a system for selling and activating preprinted lottery tickets. Ex. 1005, Abstract; Ex. 1003, ¶¶75-76. Szrek discloses that each ticket “has a barcode 310 that could be scanned on the cash register, with information identifying this barcode as lottery ticket 300 and uniquely identifying the ticket 330.” *Id.*, 6:7-

10. The barcode could also include product information like the chosen bet combination or the sequence counter. *Id.*, 7:21-31. This information, along with payment confirmation, is sent to a backend game provider which uses that information to activate a lottery ticket. *Id.*, 6:32-37, 6:44-47. The game provider sends to the POS terminal details about the lottery draw, "such as draw number or draw time, [which is] printed on cash register receipt." *Id.*, 6:54-59. Szrek also discloses an embodiment where information sent between the cash register and game provider goes through a store back office, as depicted in the annotated Figure 2 below.

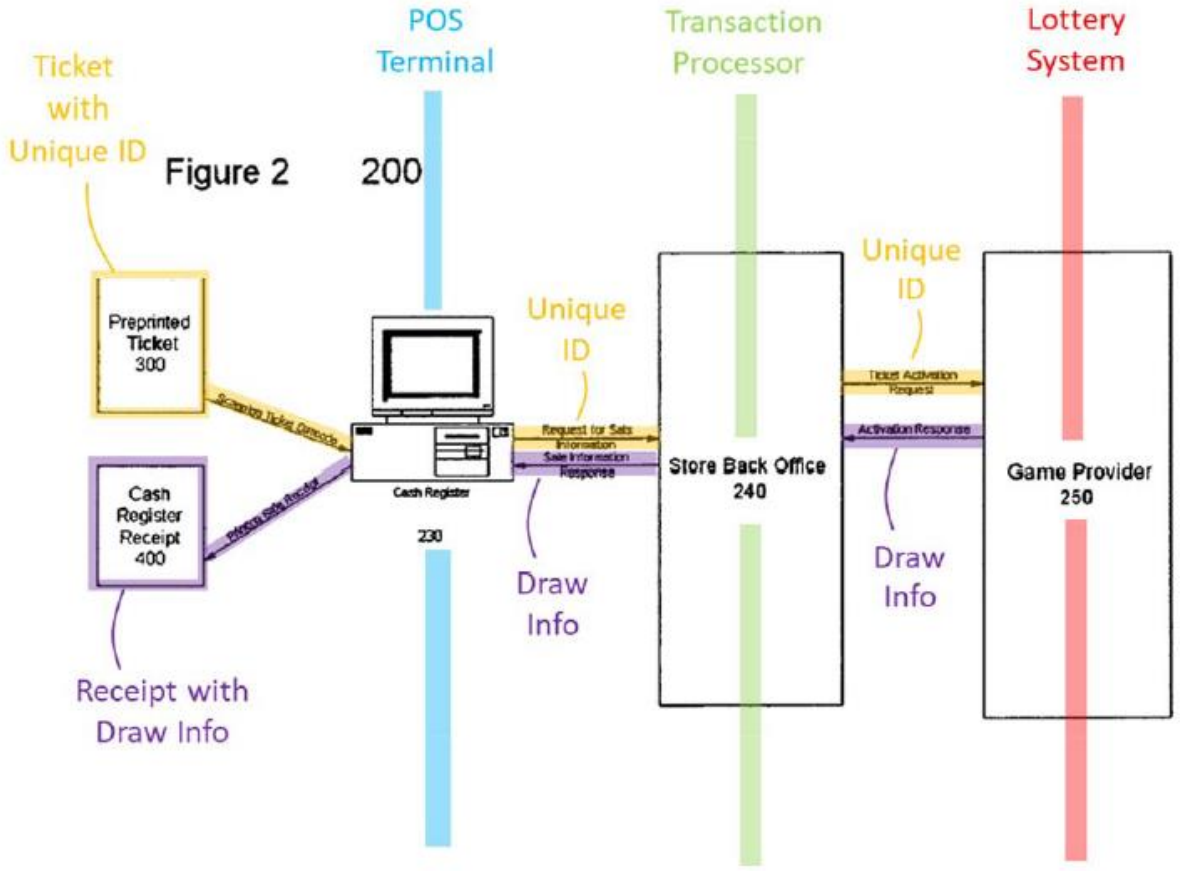

B. Llach (Ex. 1006)

U.S. Patent Pub. No. 2013/0041768 published February 14, 2013 and is therefore prior art under §102(b).

Llach discloses a system for activating stored value cards (*i.e.* pre-printed gift cards) at a POS terminal in a retail store. Ex. 1003, ¶¶77-79. Llach discloses three components for performing the activation: (1) the POS terminal, which communicates with the (2) transaction computer, which communicates with the (3) card issuer's activation system. These components are depicted below in Figure 1.

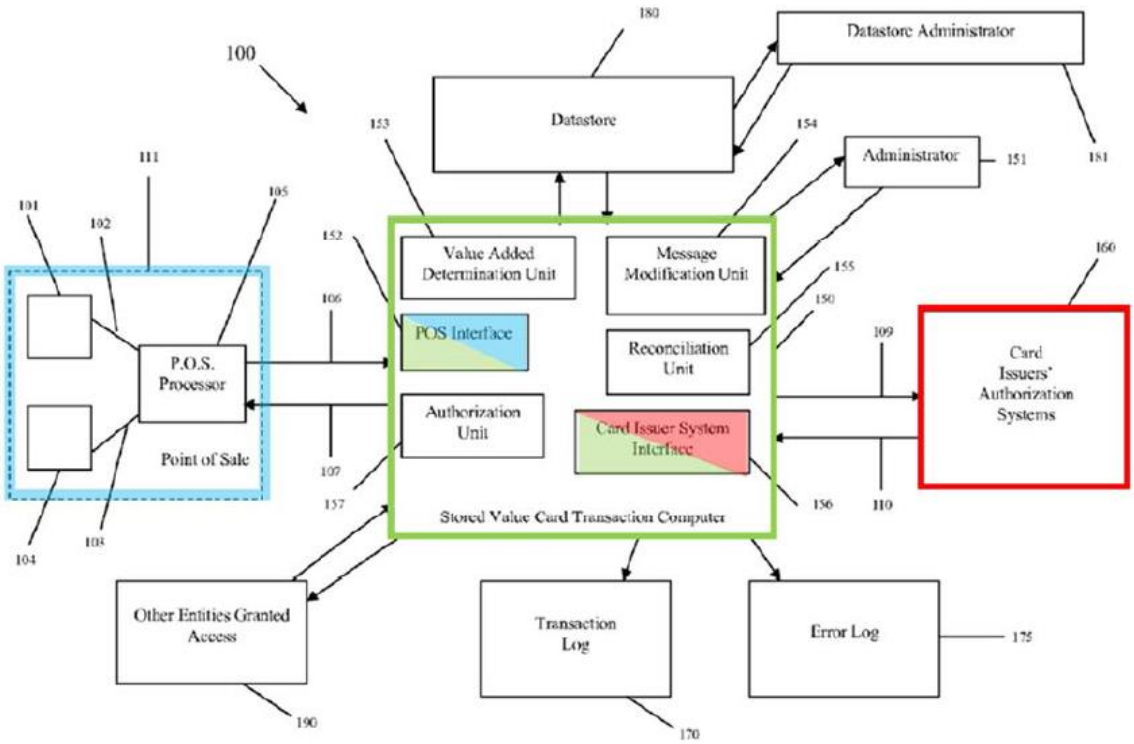

Figure 1

The process begins by scanning a barcode on the stored value card, from which a unique identifier and other information is obtained. Ex. 1006, [0019]. That

information, along with payment confirmation, is transmitted to transaction computer 150, which processes the transmission and forwards it to the respective card issuer's authorization system. *Id.*, [0037]. The authorization system activates the card, and then sends information back to the POS terminal via the transaction computer.

VIII. CLAIM CONSTRUCTION

Petitioner has applied the ordinary and customary meaning as it would have been understood by a POSITA at the time of the alleged invention, in the context of the '135 patent and its prosecution history. *Phillips v. AWH Corp.*, 415 F.3d 1303 (Fed. Cir. 2005) (*en banc*).

During PGR2020-00084, the parties disputed, and the Board resolved, two terms of the '894 patent that also appear in the '135 patent: (1) "transaction processor," and (2) "data package." Petitioner proposes that these terms be given their plain and ordinary meaning as construed by the Board in PGR2020-00084. *See* Ex. 1008, 13-24; Ex. 1003, ¶¶89-90.

A. "transaction processor"

Petitioner proposes that this term be given is plain meaning in view of the '135 patent, which is "a processor that processes transactions between two devices." Ex. 1003, ¶¶91-99. In PGR2020-00084, the parties agreed that the plain meaning of the term "transaction processor" included "a processor that processes transactions

between two devices," and that was how the Board construed the term. Ex. 1008, 15.

As set forth in the attached declaration of Mr. Hutton, the ordinary meaning of this term to a POSITA in the context of the '135 patent is captured by Petitioner's proposed meaning. Ex. 1003, ¶¶92-93. This is confirmed by the '135 patent's intrinsic evidence. The '135 patent's claims and specification are clear that the transaction processor is a separate device from the POS terminal and the lottery administration system. With respect to the claims, claim 6 recites a "transaction processor comprising: at least one communication interface for communicating with *other computing systems*" and a "processing unit configure[d]" to "transmit[]" and "receiv[e]" information from a POS terminal or lottery administration system. Claim 2 similarly recites that a POS terminal and lottery administration transmit or receive information from the transaction processor. Because the claims separately list the transaction processor, POS terminal, and lottery administration system, "the clear implication of the claim language is that those elements are distinct components of the patented invention." *Becton, Dickinson & Co. v. Tyco Healthcare Grp., LP*, 616 F.3d 1249, 1254 (Fed. Cir. 2010); Ex. 1003, ¶92. The Board in PGR2022-00084 similarly held that because of nearly identical claim language in the '894 patent, "the transaction processor, retailer POS, and lottery administration system [are] distinct components of the claimed invention." Ex. 1008, 17-20.

The specification of the ’135 patent further supports that these components are separate, which the Board in PGR2020-00084 agreed with respect to identical disclosures in the ’894 patent. Ex. 1008, 20-22 (“[I]t is clear that the Specification [of the ’894 patent] is referring to the retailer POS terminal and the lottery system as the external devices with which the transaction processor system communications through the I/O interface(s).”); Ex. 1001, 8:2-7 (“a retailer’s point of sale terminal 202 ..., a lottery system 220 ... and a transaction processor 630 to facilitate the exchange of data between the retailer’s point of sale 202 and the lottery system 220 each connected to one other through one or more communication networks 218; 219”); 8:51-54 (“transaction processor system 630 may include central processing unit (CPU) 604, memory unit 616 and I/O interface(s) 608 for communicating with devices external to the transaction processor system 630”); Fig. 6 (depicting transaction processor 630 as having a separate CPU, memory, and I/O interface from the POS terminal 202 and lottery administration system 220); Ex. 1003, ¶93.

To the extent Patent Owner argues that the construction of “transaction processor” is limited to third-party processors, as it did in PGR2020-00084, that construction should be rejected. Ex. 1003, ¶¶94-99.

First, there can be no dispute that the plain meaning of the term “transaction processor” is not limited to a third-party transaction processor, as the term says nothing about who owns or operates it. Ex. 1003, ¶95. As just discussed, within the

context of the claims and specification, the transaction processor is simply a processor that transmits and receives information from other devices, without regard to any party that may own or operate it. *Id.*

To construe a term beyond its plain meaning, "[t]here are only two exceptions to this general rule: 1) when a patentee sets out a definition and acts as his own lexicographer, or 2) when the patentee disavows the full scope of a claim term either in the specification or during prosecution." *Kyocera Senco Industrial Tools v. ITC*, 22 F.4th 1369, 1378 (Fed. Cir. 2022).

Neither the specification nor the prosecution history have done that. Ex. 1003, ¶96. The term "transaction processor" was not discussed during the prosecution of the patent. And with respect to the specification, in some, but not all, embodiments, the specification describes that using a "transaction processor system ... ***may be*** effective where a third party system is already integrated with the retailers POS for the purpose of interchanging data and transactions" and depicts a "Third Party Processor" in Figures 7 and 8. Ex. 1001, 3:35-37. These disclosures, however, do not "clearly express an intent to redefine the term." 22 F.4th at 1378; Ex. 1003, ¶97. The specification does not state that the transaction processor is a third-party transaction processor, and, in any case, the use of a third-party system is written in a permissive way. Moreover, none of the other embodiments described in the specification or depicted in the other figures indicate that the transaction processor

is a third-party one. *Info-Hold, Inc. v. Applied Media Techs. Corp.*, 783 F.3d 1262, 1267 (Fed. Cir. 2015) (explaining that an invention will only be limited to its preferred embodiment when "the patentee uses words that manifest a clear intention to restrict the scope of the claims to that embodiment").

The Board reached a similar conclusion in PGR2022-00084, stating that "[i]dentifying the transaction processor as a 'Third Party Processor' in two illustrative figures depicting a process (Ex. 1001, Figs. 7, 8), without anything more in the written description to explain why a 'third party processor' may be an important or significant aspect of the transaction processor or invention as a whole, does not justify limiting the plain meaning of a 'transaction processor' to the 'third party processor' shown." Ex. 1008, 17; Ex. 1003, ¶98.

Second, the term "third party" is a relative term that does not have a well-defined meaning as used in the '135 patent—adding it would simply add confusion and ambiguity. Ex. 1003, ¶99. The specification does not explain what the term "third party" means, for example, whether it is a vendor that manufactures the processor, or a retailer that operates the processor, or a lottery administration that owns the processor. Indeed, in PGR2020-00084, Patent Owner itself could not clearly define the "third party." On the one hand, Patent Owner construed "third party" to "exclude the retailer and lottery administration system," yet on the other hand, Patent Owner's expert testified that "third party" means "a retailer or a

vendor." Ex. 1032, 9-10. As a result, the Board in PGR2020-00084 rejected Patent Owner's construction, "agree[ing] with Petitioner that adding 'third party' to the plain meaning simply creates uncertainty." Ex. 1008, 16.

B. "data package"

The term "data package" should be given its plain meaning—a position both parties agreed with in PGR2020-00084. Ex. 1008, 22; Ex. 1003, ¶¶100-103.

To the extent Patent Owner argues that the plain meaning of "data package" is limited to a "grouping of more than one datum together in some sort of packaging syntax," the Board should reject that construction as it did in PGR2020-00084. Ex. 1008, 23-24. The intrinsic evidence does not support Patent Owner's construction. Ex. 1003, ¶102. Claim 3 of the '135 patent broadly recites that the lottery administration system transmits a "data package containing at least the draw details," *i.e.* there is no notion of "more than one datum" or any required "packaging syntax." Moreover, the specification describes that draw details may broadly "be communicated in the form of an image, ***text or any other message format deemed appropriate***." Ex. 1001, 4:50-52. Thus, neither the claims nor the specification justify Patent Owner's proposed narrowing of "data package."

The language of Patent Owner's proposal in PGR2020-00084 came from the deposition testimony of Petitioner's expert, Mr. Hutton. Ex. 1008, 23; Ex. 1003, ¶103. But as the Board correctly concluded, this testimony "is directed to what Mr.

Hutton would have *personally* thought 'data package' referred to *generally* in 2015" and "has limited probative value demonstrating what the term 'data package' means to a skilled artisan within the context of the '894 patent." *Id.* Moreover, Mr. Hutton's testimony is extrinsic evidence, and cannot override the broad use of the term "data package" in the claims or the specification of the '135 patent. *Id.*, 23-24.

IX. DETAILED EXPLANATION OF INVALIDITY GROUNDS

The following grounds establish a reasonable likelihood that the Petitioner will prevail with respect to the Challenged Claims. Ex. 1003, ¶¶104-273.

A. Ground 1: Claims 1-6 are Unpatentable Over Szrek

Szrek expressly discloses each and every limitation of the Challenged Claims, specifically POS terminals that scan identifying and product information from a pre-printed lottery ticket, and send that information to a game provider (*i.e.* a lottery administration system) (whether directly or indirectly through a store back office computer, *i.e.* transaction processor). Ex. 1003, ¶¶105-207. As the Board in PGR2020-00084 also held, Szrek renders obvious the provision of payment confirmation from the POS terminal to the lottery administration system. The lottery administration system then responds with draw details for the ticket (either directly or indirectly through a store back office computer), which is printed on a receipt. This is, in fact, exactly what the Board found Szrek to disclose in PGR2020-00084. Ex. 1008, 30-65.

1. Claim 1

(a) 1[pre]: A method of providing a lottery ticket for a random draw comprising:

To the extent the preamble is limiting, Szrek discloses ***a method for providing a lottery ticket for a random draw***. Ex. 1003, ¶106. Szrek is titled "Method for ***selling lottery tickets*** from a POS terminal" and is directed to a "method and system for ***selling game of chance tickets*** at a point of sale cash register." Ex. 1005, Title, Abstract. Szrek discloses that these tickets include a "***draw*** identifier 460, such as ***draw number*** or ***draw time***." *Id.*, 6:58. Szrek further discloses that "[t]he ticket can be preprinted ... as a computer generated selections (quick pick)," and a POSITA would understand that "quick pick" refers to an option for a customer of a lottery ticket to have a computer choose random numbers for a random draw. *Id.*, 3:28-31; Ex. 1003, ¶106. Because Szrek discloses lottery/game of chance tickets with draw information, a POSITA would therefore understand that Szrek discloses the ***sale of lottery tickets for a random draw***.

The Board came to a similar conclusion in PGR2020-00084, finding that "no patentable differences exists between the subject matter Szrek discloses to a skilled artisan and the subject matter recited by independent claims 1, 6, 7, 29, and 33 [of the '894 patent]," including the preamble of claim 7, which identically claims "[a] method of providing a lottery ticket for a random draw." Ex. 1008, 30; Ex. 1007,

53-54; Ex. 1003, ¶107. Patent Owner did not dispute that Szrek discloses the preamble of claim 7.

(b) 1[a]: scanning at a point-of-sale (POS) terminal a pre-printed lottery ticket to obtain unique identification information and product information from the pre-printed lottery ticket;

[S]canning at a point-of-sale (POS) terminal a pre-printed ticket to obtain unique information ... from the pre-printed lottery ticket: Szrek discloses "***Preprinted tickets*** (PT) 300," where "[e]ach ticket 300 preferably has a barcode 310 that could be ***scanned*** on the cash register [*i.e.* ***POS terminal***], with information allowing identifying this ***barcode as lottery ticket 300*** and ***uniquely identifying*** the ticket 330," element 330 being the "***unique ticket identifier*** 330." Ex. 1005, 5:57, 5:67, 6:7-10. Thus, Szrek discloses that a pre-printed lottery ticket contains a ***barcode*** which ***uniquely identifies*** the ticket when ***scanned at a POS terminal***. Ex. 1003, ¶¶108-09.

The Board in PGR2020-00084 similarly held, and Patent Owner did not dispute, that Szrek discloses "provid[ing] unique identification information from a pre-printed lottery ticket" because "Szrek describes using preprinted ticket 300 that has a unique ticket identifier 330 and a barcode 310 that includes the unique ticket identifier." Ex. 1008, 33; Ex. 1003, ¶110. The Board in PGR2020-00084 further held that, for the '894 patent claim 3's "scan of the pre-printed lottery ticket," "Petitioner provides arguments and evidence identifying where the recited subject

matter ... is taught or suggested by Szrek" and that "Patent Owner does not dispute that Szrek discloses or suggests" claim 3's limitation. *Id.*, 46.

[S]canning ... to obtain ... product information from the pre-printed lottery ticket: Szrek provides a number of teachings that the scanned barcode contains product information, *i.e.* information about the lottery ticket product. Ex. 1003, ¶111. Szrek discloses that the "fixed part of the [pre-printed lottery ticket's] barcode should ***indicate the product type***," *i.e.* ***product information***. Ex. 1005, 6:11-12. Szrek also discloses that "the information in the barcode ... may contain other information such as ***lottery product code, ticket price or other data***," *i.e.* ***product information***. *Id.*, 4:44-46. Along with this information encoded in the barcode, Szrek discloses that the ticket identifier itself (which as discussed above is scanned from the barcode) also contains ***product information***. For example, Szrek discloses that "part of ticket identifier 330 could correspond to ***the bet combination*** 350 chosen by the players [or] some element making this ticket unique, such as issued tickets ***sequence counter*** on said self-service terminal 130 or kiosk 130," *i.e.* ***product information***. Ex. 1005, 7:21-31. A POSITA would understand that product type, product code, ticket price, bet combination, or sequence counter are all examples of ***product information*** because they are information about the product that was purchased, *i.e.* the lottery ticket. Ex. 1003, ¶111.

The Board in PGR2020-00084 similarly held, and Patent Owner did not dispute, that "we are persuaded that [Szrek's] 'transaction request' received by the transaction processor from a point of sale (POS) system includes 'unique product information associated with the pre-printed lottery ticket,'" a limitation from claim 11 of the '894 patent. Ex. 1008, 56; Ex. 1003, ¶112.

(c) 1[b]: transmitting the unique identification information and product information from the POS terminal to a lottery administration system;

[T]ransmitting ... information from the POS terminal to a lottery administration system: Szrek discloses that "[a]fter the barcode has been scanned, a cash register [*i.e.* ***POS terminal***] originates a ***transaction*** to the game provider [*i.e.* ***lottery administration systems***] requesting ticket activation." Ex. 1005, 4:56-58. Szrek further discloses that "the checkout register 230" (*i.e.* ***POS terminal***) sends a "transactional request to the game provider 250 [*i.e.* ***lottery administration system***] who verifies if this Checkout Play 300 was already activated." *Id.*, 6:32-37. Thus, Szrek discloses that a POS terminal transmits a transaction request to the game provider. Ex. 1003, ¶¶113-14.

[T]ransmitting the unique identification information: Szrek discloses that the transaction request sent to the game provider includes the ticket identifier (*i.e.* ***unique identification information***) obtained from the lottery ticket's barcode. Szrek states that, "during ticket activation, the game provider ... recognizes ***from the ticket***

identifier what transaction is activated (e.g. lotto, 6 specific boards known to the system and the player)," which means the game provider must have received the ticket identifier. Ex. 1005, 3:47-50; *see also id.*, 6:36-39 ("game provider ... will activate this ticket by marking a status or state of ***corresponding identifier***."). Since the ticket identifier originates from scanning the ticket at the POS terminal, a POSITA would understand based on this disclosure that the POS terminal also sent the ticket identifier to the game provider via the transaction request in order to provide the game provider the necessary information to activate the correct ticket. Ex. 1003, ¶115.

A POSITA would have also considered it obvious to transmit the ticket identifier to the game provider because the game provider "recognizes ***from the ticket identifier*** what transaction is activated," and thus transmitting the ticket identifier beneficially allows the game provider to know which ticket to activate and to perform the recited function of activating the ticket. Ex. 1003, ¶116. It would have also been beneficial to transmit the ticket identifier with the transaction request because sending them separately would be slower, less efficient, and more difficult to implement than sending them in a single transaction. Sending them separately would require some mechanism for the game provider to map requests with ticket identifiers—whereas sending them together would allow the game provider to handle the activation request in its entirety. A POSITA would have reasonably

expected transmitting the ticket identifier with the transaction request to succeed since transmitting information was a conventional computer process and implementation was within the capabilities of a POSITA, and indeed would be trivial.

The Board in PGR2020-00084 similarly held, and Patent Owner did not dispute, that "Szrek describes preprinted ticket 300 with unique identifier 330 that, when scanned at the POS terminal (cash register 230), is communicated in a transaction request ... to a lottery administration system (game provider 250)." Ex. 1008, 42 (citing Ex. 1005, 5:52-69, 6:28-38); Ex. 1003, ¶117.

[T]ransmitting ... the product information: Szrek also discloses that the transmitted transaction request contains product information. Ex. 1003, ¶118. As just discussed, Szrek discloses or renders obvious that the ticket identifier 330 is sent by the cash register (*i.e.* ***POS terminal***) to the game provider (*i.e.* ***lottery administration system***) via a transaction request. Ex. 1005, 3:47-50; 6:36-39. The ticket identifier contains product information. Szrek discloses that "part of ticket identifier 330 could correspond to the bet combination 350 chosen by the players [or] some element making this ticket unique, such as issued tickets sequence counter on said self-service terminal 130 or kiosk 130," *i.e.* ***product information***. Ex. 1005, 7:21-31. Thus, Szrek discloses that the POS terminal transmits a transaction request

to the game provider, and the transaction request contains the ticket identifier 330 which includes product information such as bet combination or sequence counter.

The Board in PGR2020-00084 similarly found, and Patent Owner did not dispute, that Szrek discloses that a "'transaction request' received ... from a point of sale (POS) system includes 'unique product information associated with the pre-printed lottery ticket.'" Ex. 1008, 56; Ex. 1003, ¶119.

(d) 1[c]: receiving at the POS terminal payment confirmation;

Szrek discloses that "[t]he preprinted ticket is not eligible to win unless ***payment*** and activation occurs" and that "[a] cash register receipt is used by the ticket holder to prove that the ticket was activated." Ex. 1005, 4:28-31. A POSITA would understand that a "cash register receipt" indicates that the POS terminal received payment confirmation, for a "receipt" is proof (and therefore confirmation) of payment. Ex. 1003, ¶¶120-21. A POSITA would further understand that payment confirmation is received at the POS terminal because Szrek discloses that the POS terminal is where a customer purchases the ticket, *i.e.* provides proof of payment in order to receive an activated ticket. *Id.*, ¶122; *see also* Ex. 1005, 1:16-19 ("The goal of the present invention is to enable the secure ***sale of lottery tickets*** at general retail point of sale (POS) checkout points, such as standard cash registers, and other similar devices."). The sale of a lottery ticket by definition requires confirmation of payment, otherwise no sale has occurred. Ex. 1003, ¶122.

Szrek also discloses that "lottery terminals or kiosks [are] equipped with ***bill acceptors for payment***," which is another form of payment confirmation. Ex. 1005, 2:55-57. A POSITA would understand that bill acceptors are devices that accept and scan bank notes (*i.e.* physical cash) and, after scanning and verifying the value of the bank note, will confirm that payment was received. Ex. 1003, ¶123.

Indeed, Patent Owner made concessions in PGR2020-00084 that are relevant here. While '894 patent does not recite a limitation where payment confirmation is received by the POS terminal, in the context of another limitation[1]Patent Owner conceded that "the customer must also possess the cash register receipt as ***proof of payment***," *i.e.* ***payment confirmation*** received at the POS terminal. Ex. 1008, 38-39; Ex. 1003, ¶¶125-26.

(e) 1[d]: transmitting payment confirmation from the POS terminal to the lottery administration system;

Szrek renders obvious that the POS terminal transmits payment confirmation to the game provider (*i.e.* ***lottery administration system***). Ex. 1003, ¶¶126-131. Szrek discloses that, after a ticket is activated, the game provider (*i.e.* lottery administration system) determines "the ticket is a winner and authorize[s] winner payment" to the POS terminal. Ex. 1005, 46:44-47. Szrek further discloses that

[1] That limitation recited that a "transaction processor system ... provide[s], to the lottery administration system, payment confirmation for the pre-printed lottery ticket." Ex. 1008, 38.

"[t]he preprinted ticket is not eligible to win unless ***payment*** and activation occurs," *i.e.* payment of the lottery ticket must be confirmed before a ticket is eligible to win. Ex. 1005, 4:28-29. A POSITA would understand that, because a winning ticket is not eligible unless ticket payment is confirmed (*i.e.*, the ticket must have been bought in the first place to be eligible to win), the game provider must receive ticket payment confirmation before it can authorize winner payment. Ex. 1003, ¶127. A POSITA would further understand that, since the POS terminal receives ticket payment confirmation when the customer pays for the ticket (*see, e.g.*, *supra* at IX.A.1(d)), the POS terminal would have also sent the ticket payment confirmation to the game provider so it can be used to authorize winner payment. Ex. 1003, ¶127. A POSITA would understand that an authorization for payment of a winning ticket from the game provider, as described in Szrek, would reflect that the game provider received payment confirmation. *Id.*

To the extent it is not expressly disclosed, a POSITA would have found that Szrek renders obvious that its POS terminal transmits payment confirmation to the game provider. Ex. 1003, ¶¶128-130. As already discussed, a ticket must have been purchased in the first place in order to be a winning ticket—and Szrek requires that payment of the ticket is confirmed before a ticket is "eligible to win." Ex. 1005, 4:28-29. And Szrek states that it is the ***game provider*** that decides whether a ticket is a winner and then "authorize[s] winner payment." *Id.*, 6:44-47.

First, it would have been obvious to a POSITA for the POS terminal to transmit payment confirmation to the game provider in the form of the transaction request. Ex. 1003, ¶129. A POSITA would have found it obvious and beneficial to have the game provider treat the transaction request as ticket payment confirmation. This is because a POSITA would have been well aware that typical contracts between lottery systems and retailers will require that any activation request that is not canceled be for a ticket where payment is confirmed. *Id.* Thus, a retailer is contractually obligated to only send a transaction request after payment is confirmed. *Id.* Moreover, at the time of the '135 patent, lottery providers were increasingly using their own designed POS terminals for purchase and authorization of lottery tickets, and they were typically designed to require payment confirmation before sending an authorization request (for example, the POS terminal disclosed in Szrek). *Id.* Because of these contractual obligations and the increasing use of trustworthy lottery-owned POS terminals for activating lottery tickets, a POSITA would find it beneficial for Szrek's game provider to treat the transaction request as payment confirmation, as that would allow the game provider to authorize winner payments without the need to process additional information, thereby increasing efficiency and decreasing cost of the authorization process. *Id.* A POSITA would have reasonably expected having the game provider treat the transaction request as payment confirmation to succeed, since implementing such functionality was trivial and well-

within the capabilities of a POSITA, and the use of lottery-owned POS terminals and a retailer's contractual obligations was typical in the industry. *Id.*

A POSITA would have also considered it obvious to send data representing payment confirmation concurrent with the transaction request. Ex. 1003, ¶130. A POSITA would have considered it obvious to transmit such payment confirmation in order to allow the game provider to independently confirm payment of the ticket before authorizing the ticket and winner payment. *Id.* A POSITA would have found this desirable because it would add an extra layer of security to have both POS terminal and game provider confirm ticket payment. *Id.* A POSITA would have reasonably expected this to succeed, as implementing a POS terminal to send payment confirmation concurrently with the transaction request was trivial and well-within the capabilities of a POSITA. *Id.*

In PGR2020-00084, one of the primary disputes between Petition and Patent Owner was whether Szrek disclosed a similar limitation in the '894 patent that requires the "lottery administration system [to receive] payment confirmation for the pre-printed lottery ticket." Ex. 1008, 38-40; Ex. 1003, ¶131. Patent Owner argued that "the cash register never provides an affirmative confirmation of payment to the lottery administration system." Ex. 1008, 38. The Board rejected Patent Owner's argument, concluding that in Szrek, "it logically follows that the game provider system possessed the information necessary to establish payment" and that "a natural

result flowing from the game provider system being able to determine a winning ticket *and* provide authorization of a winning payment is that the store back office provided payment confirmation for the ticket to the game provider system *before* that determination." *Id.*, 44. This limitation was the only basis for Patent Owner's appeal to the Federal Circuit, which held that the "Board's findings were supported by substantial evidence," and specifically that "because Szrek taught that from scanning a ticket, the lottery administration system could alone determine whether the ticket was eligible to win a prize, it logically followed that the lottery administration system possessed the information necessary to establish payment." Ex. 1009, 4.

(f) 1[e]: receiving at the POS terminal from the lottery administration system draw details associated with the pre-printed lottery ticket; and

Szrek discloses that the game provider (*i.e.* ***lottery administration system***) sends an activation receipt (which contains ***draw details***) to the POS terminal. Ex. 1003, ¶¶132-35. Szrek discloses that after the game provider (*i.e.* ***lottery administration system***) activates a ticket, it "sends activation receipt info to the cash register" (*i.e.* ***POS terminal***) and that "***only*** an activation receipt for the transaction is printed at cash register." Ex. 1005, 3:53-56. Szrek also refers to the "activation receipt" as a "cash register receipt [which] is used by the ticket holder to prove that the ***ticket was activated***." *Id.*, 4:29-30. A POSITA would understand that in Szrek,

the "cash register receipt" is simply another name for the "activation receipt" because the activation receipt is the "only" receipt that is "printed at [the] cash register" and the cash register receipt "prove[s] that the ticket was activated." *Id.*, 3:53-56, 4:29-30; Ex. 1003, ¶133.

Szrek discloses that the "activation receipt"/"cash register receipt" contains ***draw details associated with the pre-printed lottery ticket***. Ex. 1003, ¶134. Specifically, Szrek discloses that "[o]nce the ticket 300 is activated, product type 410 ..., the ***original preprinted ticket identifier 330***, activation identifier 430, security codes 440, an activation price 450 and valid ***draw identifier 460, such as draw number or draw time***, [*i.e.* ***draw details***] are printed on cash register receipt." Ex. 1005, 6:54-59. Because the draw details are included with the "original preprinted ticket identifier," they are ***associated with the pre-printed lottery ticket***. Thus, a POSITA would understand from these teachings that the game provider (*i.e.* ***lottery administration system***) transmits to the cash register (*i.e.* ***POS terminal***) an activation receipt, which includes the draw identifier, draw number and draw time (*i.e.* ***draw details associated with the pre-printed lottery ticket***). Ex. 1003, ¶134.

In PGR2020-00084, for similar reasons, the Board found that Szrek discloses the '894 patent's limitation of "receive, from a lottery administration system, a determined draw information associated with the unique identification information." Ex. 1008, 30; Ex. 1007, 45-47; Ex. 1003, ¶135.

(g) 1[f]: printing the draw details on a receipt.

Szrek discloses ***printing the draw details on a receipt***. Ex. 1003, ¶¶136-138. Szrek discloses that "[o]nce the ticket 300 is activated, product type 410 ..., the original preprinted ticket identifier 330, activation identifier 430, security codes 440, an activation price 450 and valid ***draw identifier 460, such as draw number or draw time***, [*i.e.* ***draw details***] are ***printed on cash register receipt***." Ex. 1005, 6:54-59. Figure 4, annotated below, is a "diagrammatic view of activation information printed on the cash register receipt," and depicts that draw details are printed on the receipt. *Id.*, 5:48-49.

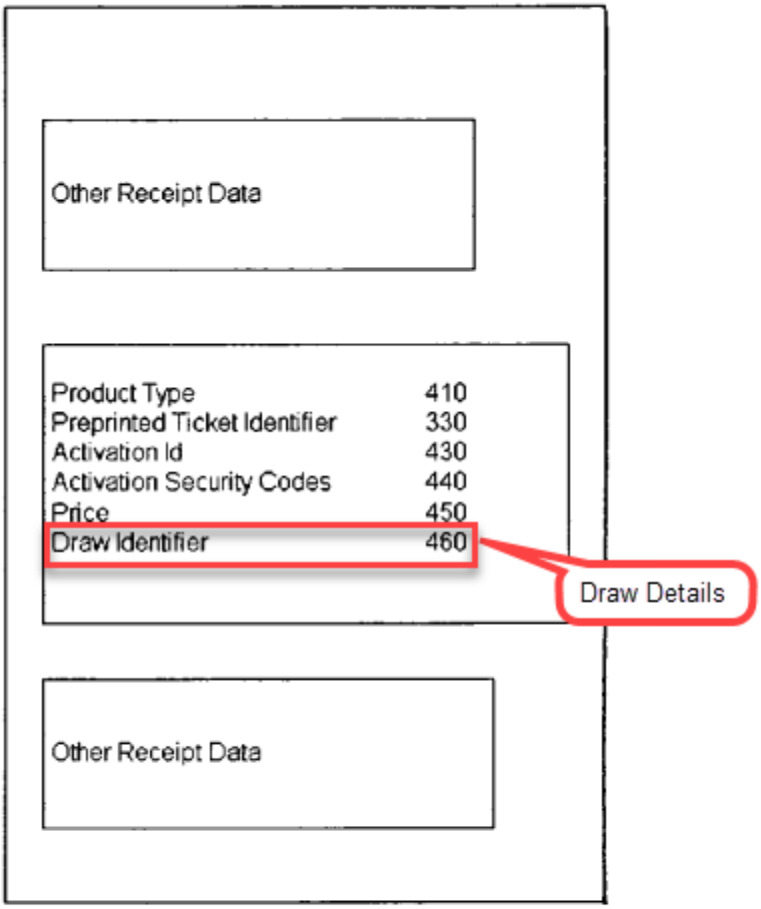

400
Cash Register
Receipt Figure 4

The Board in PGR2020-00084 held, and Patent Owner did not dispute, that for claim 12, which recites "wherein draw information is made available on a printed receipt," "Petitioner provides argument and evidence identifying where the recited subject matter, respectively, is taught or suggested by Szrek." Ex. 1008, 46; Ex. 1007, 66-67.

2. Claim 2

Claim 2 is similar to claim 1 in that it recites the same information sent between the POS terminal and the lottery administration system. Claim 2, however, further recites a "transaction processor" which sits in between the POS terminal and the lottery administration system and forwards information from one to the other. Claim 2 does not require that the transaction processor transmit any other information beyond what the POS terminal and lottery administration system provide (which, again, is the same information recited in claim 1). Ex. 1003, ¶¶139-140.

Petitioner proposes that, consistent with its plain meaning, "transaction processor" be construed as "a processor that processes transactions between two devices," as the Board construed it in PGR2020-00084. Ex. 1008, 22; Ex. 1003, ¶141.

As discussed herein, Szrek discloses that information transmitted between the cash register (*i.e.* ***POS terminal***) and game provider (*i.e.* ***lottery administration system***) can also pass through an intermediary store back office, as shown in Figures 1 and 2. Ex. 1003, ¶142. Figure 1 depicts several types of POS terminals, some of which directly communicate with the game provider, and some which communicate via the "store back office 240," *i.e.* a ***transaction processor***.

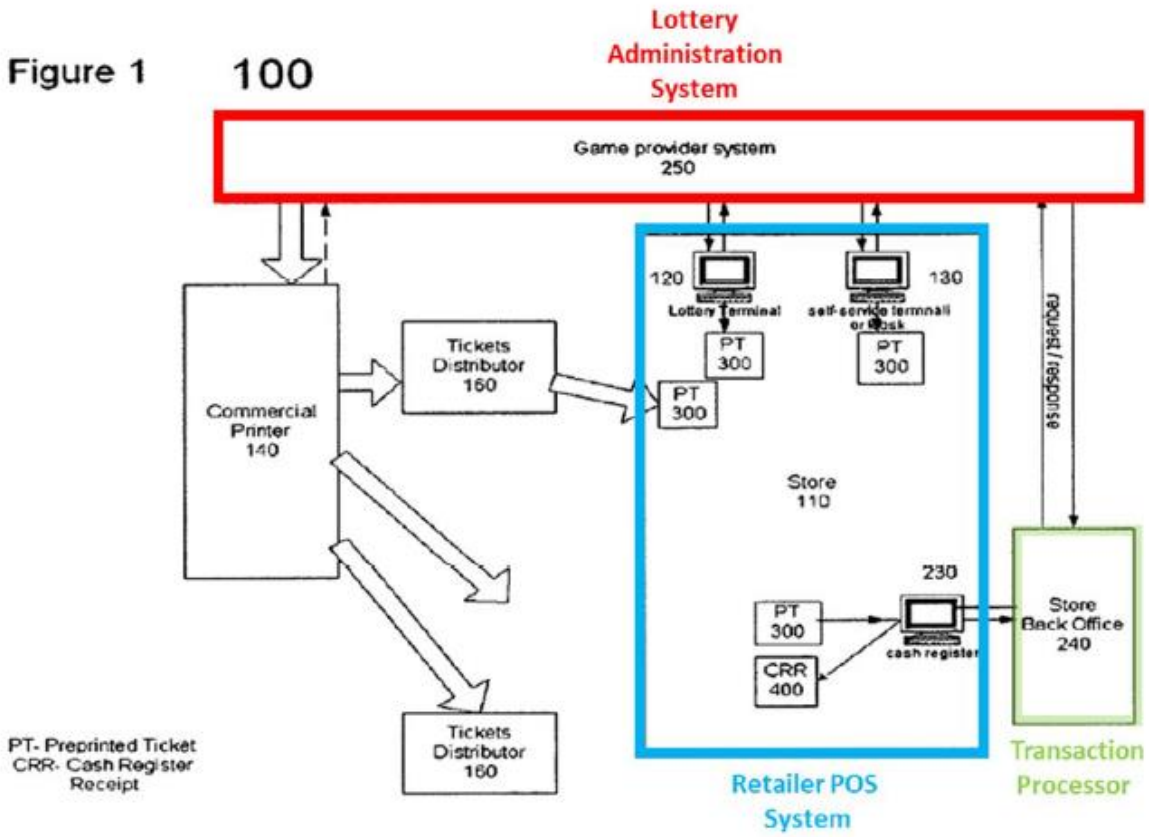

Figure 2 similarly depicts a POS system that communicates with the game provider via the store back office. Ex. 1003, ¶143.

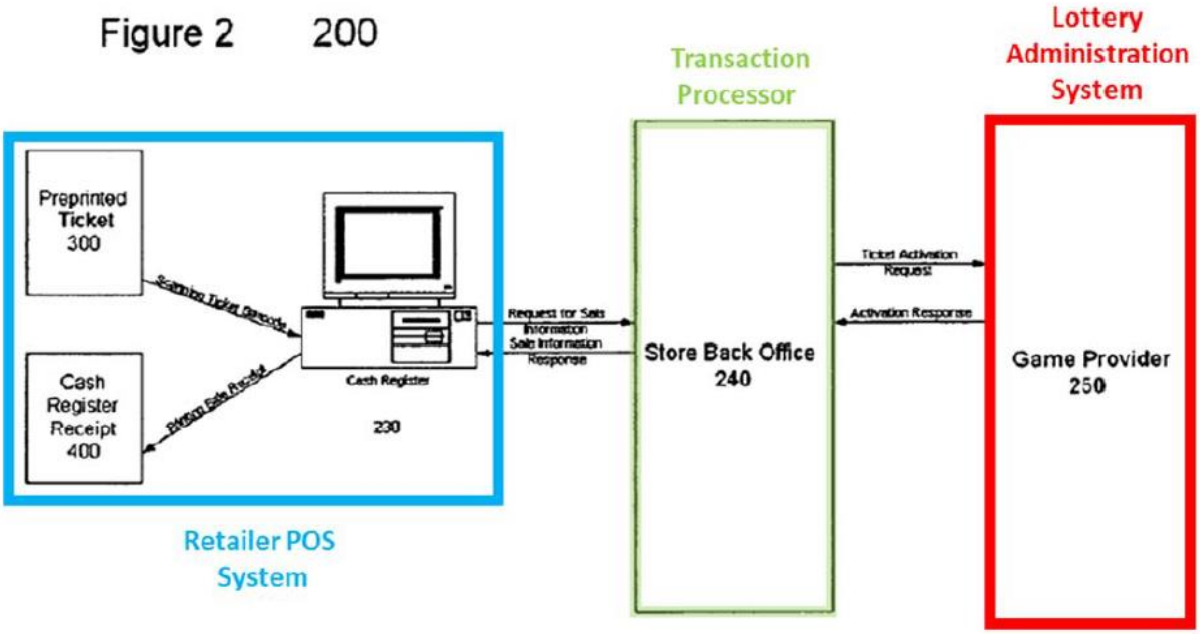

(a) Corresponding Limitations

Several limitations from claim 2 are substantively similar to limitations from claim 1, as set forth in the following chart. While the limitations may not be identical, Szrek discloses each of these limitations in claim 2 for the same reasons set forth above. Ex. 1003, ¶¶144-164. The remaining limitations from claim 2 are separately addressed.

Claim Limitation	Corresponding Claim Limitation(s)
2[pre]	1[pre]
2[a]	1[a]
2[d]	1[c]
2[i]	1[f]

(b) 2[b]: transmitting the unique identification information and product information from the POS terminal to a transaction processor;

2[c]: transmitting the unique identification information and product information from the transaction processor to a lottery administration system;

Szrek discloses these limitations**.** Ex. 1003, ¶¶146-152.

[A] transaction processor. Szrek discloses a "store back office," *i.e.* ***a transaction processor***. The proper construction of a "transaction processor" is "a processor that processes transactions between two devices." A POSITA would understand that Szrek's "store back office" includes a processor because Szrek discloses that the back office can perform computing tasks such as "connect[] to store chain network," "transform" a "request ... into an activation request," and "append its own security code," each of which would require a processor to perform. Ex. 1005, 2:50-51, 4:59-64; Ex. 1003, ¶147. Figure 2 also depicts that the store back office processes requests and responses, which a POSITA would similarly understand would require a processor.

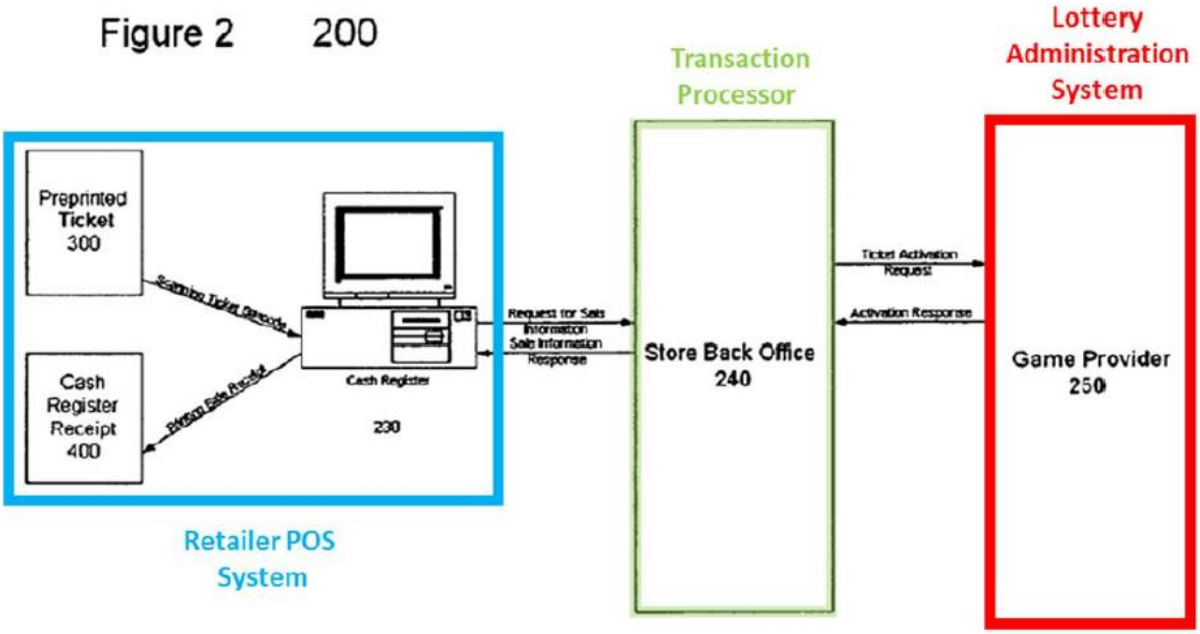

Szrek also discloses that the store back office ***processes transactions between two devices***, specifically a cash register and game provider. This is clearly depicted in Figure 2, where requests from the cash register are forwarded to the game provider, and responses from the game provider are forwarded to the cash register. Ex. 1003, ¶148.

In PGR2020-00084, the Board similarly concluded that "[f]rom Szrek's description and illustration of the disclosed activation process for a pre-printed lottery ticket at a POS terminal, cited by Petitioner, we are persuaded a skilled artisan would have recognized that store back office 240 includes: (1) a system with at least a processing unit that executes instructions ...." Ex. 1008, 40; Ex. 1003, ¶149. The Board also concluded that "a skilled artisan would have viewed store back office 240 to be a transaction processor or transaction processor system because the

processor [system] in store back office 240 processes a transaction (*i.e.*, the activation of a pre-printed lottery ticket) between two devices (*i.e.*, the POS terminal and the lottery administration system). Ex. 1008, 40-41.

[T]ransmitting the unique identification information and product information from the POS terminal to a transaction processor [and] from the transaction processor to a lottery administration system: As discussed above for limitation 1[b], Szrek discloses ***transmitting the unique identification information and product information from the POS terminal to a lottery administration system***, because Szrek discloses that an authorization request containing such information is sent from the cash register (*i.e.* ***POS terminal***) to the game provider (*i.e.* ***lottery administration system***); Ex. 1003, ¶150.

Szrek further discloses different embodiments where "the authorization request is sent to the game provider either directly from the cash register ***or indirectly via the store 'back office'.***" Ex. 1005, 4:23-25. Thus, a POSITA would understand that the authorization request (which contains ***unique identification and product information***) is transmitted from POS terminal to the back office (*i.e.* ***transaction processor***) to the game provider (*i.e.* ***lottery administration system***). Ex. 1003, ¶151.

In PGR2020-00084, for similar reasons, the Board found that "Szrek describes preprinted ticket 300 with unique identifier 330 that, when scanned at the POS terminal (cash register 230), is communicated in a transaction request to a

transaction processor (store back office 240) that then provides the transaction request to a lottery administration system (game provider 250)." Ex. 1008, 42; Ex. 1003, ¶152. The Board also found that Szrek discloses that a "'transaction request' received by the transaction processor from a point of sale (POS) system includes 'unique product information associated with the pre-printed lottery ticket.'" Ex. 1008, 56.

(c) 2[e]: transmitting payment confirmation from the POS terminal to the transaction processor;

2[f]: transmitting payment confirmation from the transaction processor to the lottery administration system;

Szrek discloses these limitations. Ex. 1003, ¶¶154-57. As discussed above, Szrek discloses a "store back office" that is a ***transaction processor***.

As discussed above for limitation 1[d], a POSITA would understand from Szrek's teachings that, in order for the game provider (*i.e.* ***lottery administration system***) to authorize payment of a winning ticket, it must have received the payment confirmation that was provided to the ***POS terminal***. Ex. 1003, ¶155.

Szrek discloses an embodiment depicted in Figure 2 where communications between the cash register and game provider are sent via the store back office. A POSITA would therefore understand that, in such an embodiment, in order for the game provider (*i.e.* ***lottery administration system***) to receive the payment confirmation to authorize payment of a winning ticket, the payment confirmation

would have been ***transmitted from the POS terminal to the back office*** (*i.e.* ***transaction processor***) and then ***transmitted from the back office to the game provider***. Ex. 1003, ¶156.

In PGR2020-00084, the Board agreed with a similar argument and concluded that in Szrek, "a natural result flowing from the game provider system being able to determine a winning ticket *and* provide authorization of a winning payment is that the store back office provided payment confirmation for the ticket to the game provider system *before* that determination." *Id.*, 44; Ex. 1003, ¶157.

(d) 2[g]: receiving by the transaction processor from the lottery administration system draw details associated with the pre-printed lottery ticket;

2[h] receiving at the POS terminal from the transaction processor draw details associated with the pre-printed lottery ticket; and

Szrek discloses these limitations. Ex. 1003, ¶¶158-62. As discussed above for limitation 2[b], Szrek discloses a "store back office" that is ***a transaction processor***.

As discussed above for limitation 1[e], Szrek discloses ***receiving at the POS terminal from the lottery administration system draw details associated with the pre-printed lottery ticket***, because Szrek discloses an "activation receipt" that contains said draw details that is sent from the game provider (*i.e.* ***lottery administration system***) to the cash register (*i.e.* ***POS terminal***). Ex. 1003, ¶159.

Szrek further discloses an alternative embodiment where the game provider "sends back" the activation receipt to the store back office, and that "[t]he store back office may append its own security code" to the activation receipt. Ex. 1005, 4:60-64. A POSITA would therefore understand that Szrek discloses that the activation receipt is sent by the game provider to the store back office which may provide a security code before transmitting it to the POS terminal. Ex. 1003, ¶160.

Moreover, Szrek discloses an embodiment depicted in Figure 2 where communications between the game provider and cash register are sent via the store back office. A POSITA would therefore understand that, in such an embodiment, in order for the game provider (*i.e.* ***lottery administration system***) to send the activation receipt (containing the ***draw details***) to the cash register, the activation receipt would have been ***transmitted from the game provider to the back office*** (*i.e.* ***transaction processor***) and then ***transmitted from the back office to the POS terminal***. Ex. 1003, ¶161.

In PGR2020-00084, for similar reasons, the Board found that Szrek discloses the '894 patent's limitation of a transaction processor system that "receive[s], from a lottery administration system, a determined draw information associated with the unique identification information." Ex. 1008, 30; Ex. 1007, 45-47; Ex. 1003, ¶162.

3. Claim 3: The method of claim 1 or 2, further comprising transmitting the draw details by the lottery administration system, wherein transmitting the draw details generating at

the lottery administration system an image or data package containing at least the draw details.

Szrek discloses this limitation. Ex. 1003, ¶¶164-67.

[T]ransmitting the draw details by the lottery administration system. As discussed for limitations 1[e] and 2[g], Szrek discloses that the game provider (*i.e.* ***lottery administration system***) transmits an activation receipt (comprising ***draw details***) to a POS terminal either directly, or via a store back office; Ex. 1003, ¶165.

[W]herein transmitting the draw details [comprises] generating at the lottery administration system an image or data package containing at least the draw details. A POSITA would understand that the activation receipt (comprising ***draw details***) is transmitted by the game provider (*i.e.* ***lottery administration system***) as a data package. Ex. 1003, ¶166. Figure 4, which depicts "activation information printed on the cash register receipt," that is, the activation receipt information transmitted by the game provider, states that the activation receipt information is "receipt ***data***." A POSITA would understand that such data, including the draw details, is sent as a ***data package*** because a POSITA would have known data that is transmitted will be transmitted in a "message format deemed appropriate," which is how the '135 patent describes a "data package." Ex. 1001, 4:50-52. Moreover, because Szrek discloses that the draw details include "draw number" and/or "draw time," a POSITA would understand that including such information into an activation receipt would be done by packaging said data together. Ex. 1003, ¶166.

At the very least, in view of the above reasons, a POSITA would have considered it obvious to transmit the activation receipt as a data package, since a POSITA would understand that it would be desirable to transmit data in a "message format deemed appropriate" for the transmission medium. *Id.*; Ex. 1001, 4:50-52.

In PGR2020-00084, for similar reasons, the Board held that "[b]ecause the textual information communicated to the transaction processor from the game provider system is generated on the printed receipt by a POS device in Szrek ..., at the time of the invention, a skilled artisan would have recognized that the transaction processor received, from the lottery administration system, an electronically formatted message with textual information about the random draw details." Ex. 1008, 47-48; Ex. 1003, ¶167.

4. Claim 4

(a) Corresponding Limitations

Several limitations from claim 4 are substantively similar to limitations from claim 1, as set forth in the following chart. While the limitations may not be identical, Szrek discloses each of these limitations in claim 4 for the same reasons set forth above. Ex. 1003, ¶¶168-180. The remaining limitations from claim 4 are separately addressed.

Claim Limitation	Corresponding Claim Limitation(s)
4[pre]	1[b]

Claim Limitation	Corresponding Claim Limitation(s)
4[b]	1[b]
4[d]	1[e]
4[e]	1[d]
4[f]	1[f]

(b) 4[a]

Szrek discloses that the game provider (*i.e.* ***lottery administration system***) comprises a communication interface, a processing unit, and a memory unit. Ex. 1003, ¶¶169-174.

[C]ommunication interface: Figure 1 depicts that the "game provider system 250" communicates with POS systems and the store back office, as well as a commercial printer. Figure 2 likewise depicts that the game provider 250 communicates with store back office 240. A POSITA would therefore understand that the game provider system comprises a ***communication interface for communicating with other computing systems***. Ex. 1003, ¶170.

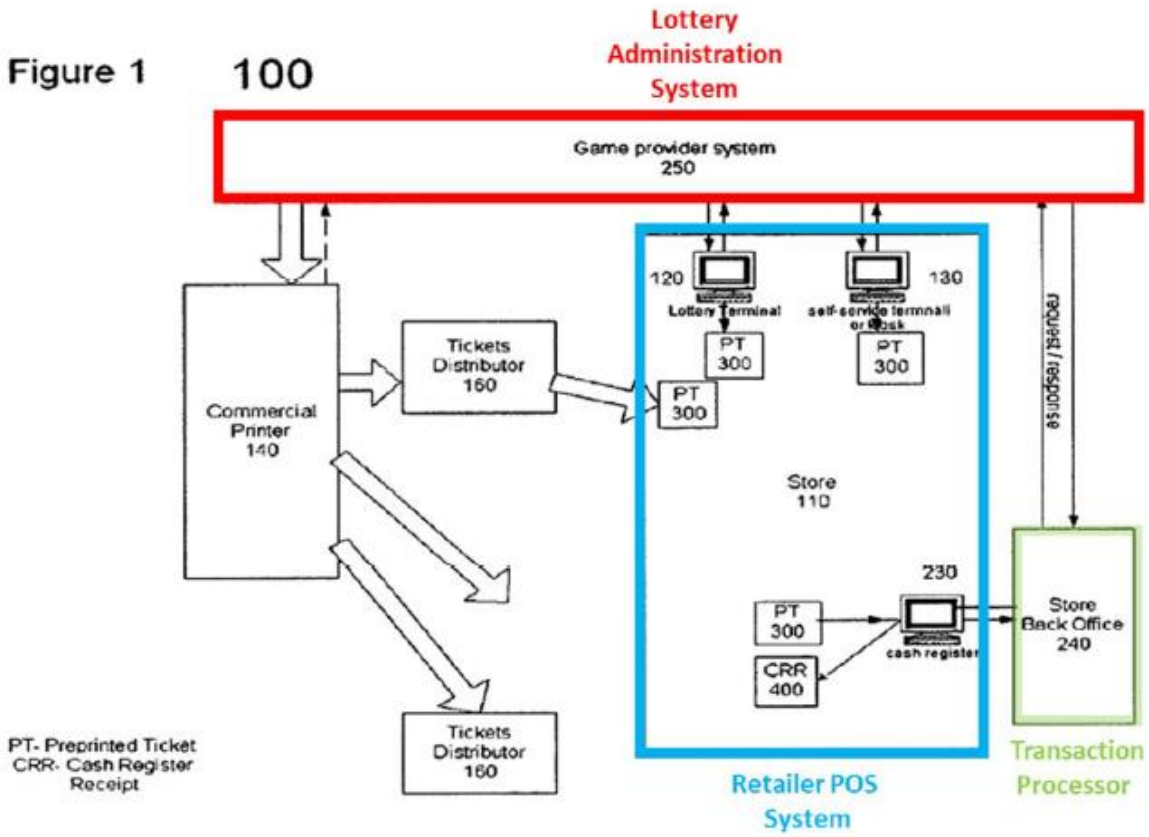

[A] processing unit: Szrek discloses that the game provider performs a number of computing functions, including those discussed above in claims 1-3. Szrek also discloses that "game provider 250 ... agrees with commercial printer 140 on methods of its assignment ... ***via algorithm***)." Ex. 1005, 7:13-18. A POSITA would understand that these processes and algorithms would require a ***processing unit for executing instructions***. Ex. 1003, ¶171.

[A] memory unit: Szrek discloses that the game provider has a "computer memory." Ex. 1005, 6:39-40. A POSITA would also understand that in order for a

system to perform processes and algorithms, it would require ***a memory unit for storing instructions*** that the processing unit executed. Ex. 1003, ¶172.

[W]hich when executed .... *See, supra*, limitations 1[pre], 1[e]. Ex. 1003, ¶173.

In PGR2020-00084, the Board found a POSITA would understand that, based on similar disclosures about Szrek's back office (including Figure 2), the back office comprised a communications interface, a processing unit, and a memory unit. Ex. 1008, 40. The Board should reach a similar conclusion with respect to Szrek's game provider system. Ex. 1003, ¶174.

(c) 4[c]: determining at the lottery administration system draw information for a subsequent draw being held,

As discussed above for limitation 1[e], Szrek discloses that the game provider (*i.e.* ***lottery administration system***) transmits draw details "such as draw number or draw time." Ex. 1005, 6:54-59. A POSITA would therefore understand that such draw details are ***determined at the lottery administration system***. Ex. 1003, ¶176.

A POSITA would further understand that the "draw time" is ***draw information for a subsequent draw being held***. Szrek discloses that "[i]n accordance with the present invention, such securely printed tickets can then be activated and used for ***the next lottery draw***." Ex. 1005, 5:30-32. Szrek also discloses that "tickets 300 will not be eligible in the draws until activated," which a POSITA would understand indicates that the draws are ***subsequent*** to the activation.

Id., 5:60-61. Thus, the disclosed "draw time" refers to a ***subsequent draw***. Ex. 1003, ¶177.

(d) 4[d]: associating at the lottery administration system the determined draw information with the unique identification information,

As discussed above for limitation 1[e], the game provider provides an activation receipt containing "preprinted ticket identifier 330" and draw information. Ex. 1005, 6:54-59. Thus, the game provider associates draw information with unique identification information. Ex. 1003, ¶178.

5. Claim 5

(a) Corresponding Limitations

Several limitations from claim 5 are substantively similar to limitations from claim 1, as set forth in the following chart. While the limitations may not be identical, Szrek discloses each of these limitations in claim 5 for the same reasons set forth above. Ex. 1003, ¶¶181-191. The remaining limitations from claim 5 are separately addressed.

Claim Limitation	Corresponding Claim Limitation(s)
5[pre]	1[pre]
5[b]	1[a]
5[c]	1[b]
5[d]	1[c]
5[e]	1[e]

Claim Limitation	Corresponding Claim Limitation(s)
5[f]	1[f]

(b) 5[a]

Szrek discloses that a POS terminal comprises a communication interface, a processing unit, and a memory unit. Ex. 1003, ¶¶182-186.

[C]ommunication interface: Figure 1 depicts several POS terminals that communicate with the store back office and the game provider system. Szrek further discloses that "the cash register is capable of ***communicating*** with the game provider system." Ex. 1005, 3:15-16. A POSITA would therefore understand that the cash register (*i.e.* ***POS terminal***) comprises a ***communication interface for communicating with other computing systems***. Ex. 1003, ¶183.

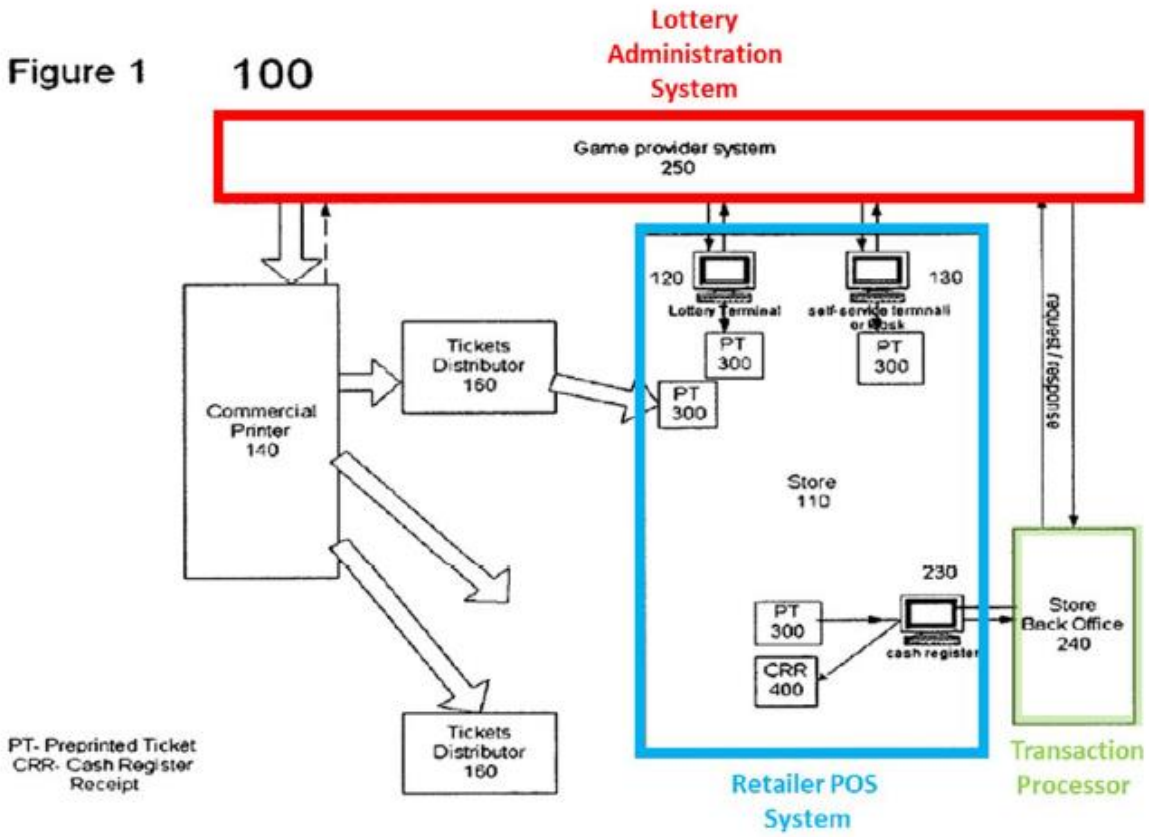

[A] processing unit and a memory unit: Szrek depicts the POS terminal in Figure 1 and Figure 2 as a computer system, which a POSITA would understand includes a ***processing unit***. Szrek also discloses that the POS terminal performs a number of computing functions, including those discussed above in claims 1-3. Ex. 1003, ¶184. Szrek also discloses that cash registers have "hardware and software." Ex. 1005, 1:53-54. A POSITA would understand that executing computer functions and software would require a ***processing unit for executing instructions***. Ex. 1003, ¶184. A POSITA would also understand that executing functions and software would also require a ***memory unit*** for storing instructions. Ex. 1003, ¶184.

[W]hich when executed .... *See, supra,* limitations 1[pre], 1[a]. Ex. 1003, ¶185.

In PGR2020-00084, the Board found a POSITA would understand that, based on similar disclosures about Szrek's back office (including Figure 2), the back office comprised a communications interface, a processing unit, and a memory unit. Ex. 1008, 40. The Board should reach a similar conclusion with respect to Szrek's POS terminals. Ex. 1003, ¶186.

6. Claim 6

(a) Corresponding Limitations

Several limitations from claim 6 are substantively similar to limitations from claim 2, as set forth in the following chart. While the limitations may not be identical, Szrek discloses each of these limitations in claim 6 for the same reasons set forth above. Ex. 1003, ¶¶192-207. The remaining limitations from claim 6 are separately addressed.

Claim Limitation	Corresponding Claim Limitation(s)
6[pre]	2[b]
6[b]	2[a]
6[c]	2[b]
6[d]	2[c]
6[e]	2[d]
6[f]	2[e]

Claim Limitation	Corresponding Claim Limitation(s)
6[g]	2[f]
6[h]	2[g]
6[i]	2[h]
6[j]	2[i]

(b) 6[a]

Szrek discloses that the store back office 240 (*i.e.* ***transaction processor***) comprises a communication interface, a processing unit, and a memory unit. Ex. 1003, ¶¶193-207.

[C]ommunication interface: Figure 1 depicts that the "store back office 240" communicates with POS systems and the game provider system. Figure 2 likewise depicts that the store back office 240 communicates with the cash register and game provider. Szrek further discloses that the "store back office ... may be connected to a store chain network." Ex. 1005, 2:50-51. A POSITA would therefore understand that the game provider system comprises a ***communication interface for communicating with other computing systems***. Ex. 1003, ¶194.

[A] processing unit: *See, supra*, limitation 2[a]. Ex. 1003, ¶195.

[A] memory unit: As discussed in limitation 2[a], Szrek discloses a number of computing functions performed by the store back office, from which a POSITA would understand the store back office comprises a processor. Szrek also discloses that the store back office comprises "software." Ex. 1005, 4:60. A POSITA would

understand that in order for Szrek to execute software instructions, it would require ***a memory unit for storing instructions*** that the processing unit executed. Ex. 1003, ¶196.

[W]hich when executed ...: *See, supra*, limitations 1[pre], 2[b]. Ex. 1003, ¶197.

In PGR2020-00084, the Board found "[f]rom Szrek's description and illustration of the disclosed activation process for a pre-printed lottery ticket at a POS terminal, cited by Petitioner, we are persuaded a skilled artisan would have recognized that store back office 240 includes: (1) a system with at least a processing unit that executes instructions; (2) a communication interface for communicating with cash register 230 and game provider system 250; and (3) a memory unit for storing those instructions." Ex. 1008, 40; Ex. 1003, ¶198.

B. Ground 2: Claims 1-6 are Unpatentable over Llach and Szrek

Independently of Ground 1, Llach in view of Szrek also renders obvious claims 1-6. Ex. 1003, ¶¶208-273. Llach discloses a system for activating "stored value cards" where a POS terminal scans a barcode printed on the stored value card, sends the information (and payment confirmation) to a transaction computer, which sends it to a card issuer's authorization system for activation. Upon activation, the authorization system sends back information about the additional value amounts added to the card, which are printed on the receipt generated by the POS terminal.

While Llach does not expressly disclose activating a pre-printed lottery ticket, it would have been obvious to combine Llach with Szrek's disclosures for scanning and authorizing a pre-printed lottery ticket, including the information transmitted and received by the POS terminal to facilitate the transaction.

1. Rationale to Combine Llach and Szrek

A POSITA would have found it obvious to modify Llach's system for activating "stored value cards" (*i.e* gift cards) by incorporating Szrek's teachings of activating pre-printed lottery tickets and receiving draw details. Ex. 1003, ¶¶210-18. A POSITA would be motivated to do this because it would allow Llach's system to sell pre-printed lottery tickets, thereby providing numerous benefits, including increased revenue streams for retailers, greater flexibility in retailers' POS terminals or cash registers, simplification of operations by having POS terminals allow transactions for both gift cards and lottery tickets, reduction in time of transaction, and greater customer satisfaction. Ex. 1003, ¶210. A POSITA would also know that this would simply be the application of Szrek's known techniques for activating lottery tickets to Llach's known system. *Id.*

As discussed below, Llach discloses a system for activating "stored value cards" where a POS terminal scans a barcode printed on the stored value card, sends the information (and payment confirmation) to a transaction computer, which sends it to a card issuer's authorization system for activation. Upon activation, the

authorization system sends back information about the additional value amounts added to the card, which are printed on the receipt generated by the POS terminal. And as discussed above in Ground 1, Szrek discloses a similar system for activating pre-printed lottery tickets, where a POS terminal scans a barcode on the pre-printed ticket, sends the information to a game provider (either directly or indirectly via a store back office), after which the game provider returns draw details about the lottery, which are printed on a receipt. *Compare* Llach Fig. 1 *with* Szrek Fig. 2; Ex. 1003, ¶211.

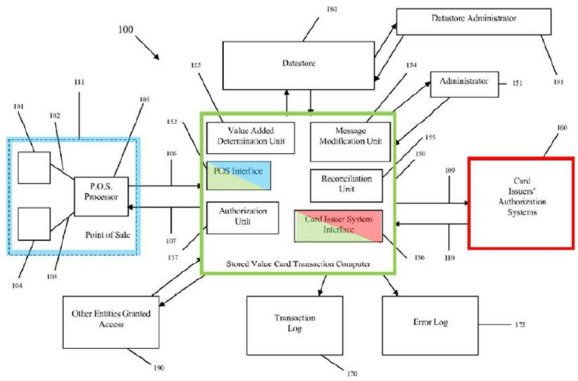

Figure 1

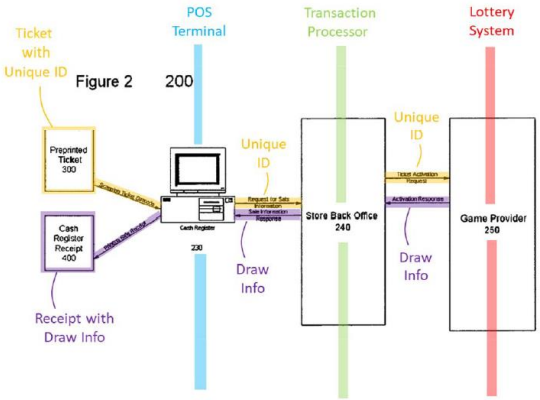

A POSITA would be motivated to combine Llach's system with Szrek's system for activating pre-printed lottery tickets by modifying Llach's system to send and receive the data disclosed in Szrek, as well as modifying Llach's authorization system to perform the same functions as Szrek's game provider. By doing this, the modified system would support the sale and activation of pre-printed lottery tickets as well as gift cards, which would have provided a number of known benefits. For example, a retailer's POS terminals would be able to allow transactions for both gift

cards and lottery tickets, which is cheaper, operationally simpler, and more efficient than having two different types of POS terminals. Moreover, the sale of lottery tickets gives retailers an additional source of revenue, which is obviously desirable. Customers also would not be required to use different terminals to activate gift cards and lottery tickets, thereby reducing the time of transaction and increasing customer satisfaction, all of which are desirable to a retailer. (Ex. 1003, ¶212).

A POSITA would also be motivated to combine the two references because Szrek expressly teaches their compatibility. In particular, Szrek teaches that its process for activating pre-printed lottery tickets "is similar to a model following selling phone cards at the cash register." Ex. 1006, 2:36-46. According to Szrek, "phone cards do not work unless they are sold and activated through the cash register in the store" and "[i]n this case the sale of the card would be registered and authorization request, including phone card identifier, would be sent to the card issuer or his agent for the phone card activation." *Id.* This broadly describes the same system disclosed by Llach. Ex. 1003, ¶213.

Moreover, Llach discloses that its POS terminals support scanning of the barcode type of EAN-128, and Szrek likewise discloses that its pre-printed lottery tickets use EAN-128 barcodes. *See* Ex. 1005, 4:42; Ex. 1006, [0043]. Thus, Llach's POS terminal already supports scanning Szrek's pre-printed lottery ticket to obtain the information embedded in the barcode. Ex. 1003, ¶214.

Because of these compatibilities, a POSITA would understand that the proposed combination would simply be the application of Szrek's known techniques for activating lottery tickets to Llach's known system. Ex. 1003, ¶215.

A POSITA would have combined Llach and Szrek as proposed with a reasonable expectation of success. As discussed, Llach and Szrek disclose that their systems are compatible with one another. Indeed, Llach's POS terminals require little modification to support scanning and decoding of the EAN-128 barcode on Szrek's pre-printed lottery tickets. Modifying Llach's transaction computer and authorization system would also be well within the capabilities of a POSITA, because such modification would be minimal and trivial to implement. Indeed, Szrek provides numerous implementation details for implementing the functionalities of its game provider, which include well-known, conventional functions such as receiving identifying information, checking the unique identifying information to determine if it was already activated, and providing draw details in response. (Ex. 1003, ¶216.)

Moreover, the combination of Llach and Szrek would have yielded predictable results. A POSITA would have readily understood that combining Llach with Szrek would predictably results in Llach's system modified to be able to activate pre-printed lottery tickets (in addition to its stored value cards). Ex. 1003, ¶217.

Like Llach and Szrek, the '135 patent is directed to the field of activating pre-printed cards. Ex. 1001, 1:13-16. All three references, therefore, are directed to the same field of endeavor, and are analogous art. Ex. 1003, ¶218.

2. Claim 2

(a) 2[pre]: A method of providing a lottery ticket for a random draw comprising:

To the extent the preamble is limiting, as discussed above in Ground 1 for limitation 1[pre], Szrek discloses the preamble. When these teachings are incorporated into Llach's system for authenticating "a stored value card," the combination of Llach and Szek discloses the preamble. Ex. 1003, ¶220.

(b) 2[a]: scanning at a point-of-sale (POS) terminal a pre-printed lottery ticket to obtain unique identification information and product information from the pre-printed lottery ticket;

Llach in view of Szrek renders obvious this limitation. Ex. 1003, ¶¶221-22. Llach discloses that "at the point of sale component 111 [*i.e.* ***POS terminal***] ..., the card identifier on the stored value card is interpreted 102 by a point of sale interpretation component 101 (e.g., a card reader) [such as] a ***bar code scanner*** ..." Ex. 1006, [0019]. Llach notes that the card's unique card identifier could be encoded as "a bar code of conventional construction, such as a UPC code (e.g., a GS1-128 or UCC/EAN-128), positioned on the stored value card 201 so that it can be scanned by well-known bar code reading equipment." *Id.*, [0043]. Thus, Llach discloses a ***POS terminal*** capable of scanning bar codes. Ex. 1003, ¶221.

As discussed above in Ground 1 for limitation 1[a], Szrek discloses a pre-printed lottery ticket containing a bar code from which ***unique identification information and product information*** (such as bet combination or sequence counter) are obtained when the bar code is scanned. *See* Ex. 1005, 5:57, 5:67, 6:7-12, 7:21-31. Szrek also discloses that "[t]he barcode on the preprinted ticket should be compatible with barcode technology commonly used at the cash registers [such as] EAN-128." *Id.*, 4:42. Since both Llach and Szrek disclose support for EAN-128 barcodes, the Llach-Szrek combination results in Llach's POS terminal scanning the barcode of Szrek's pre-printed lottery ticket to obtain unique identification and product information from the ticket. Ex. 1003, ¶222.

(c) 2[b]: transmitting the unique identification information and product information from the POS terminal to a transaction processor;

2[c]: transmitting the unique identification information and product information from the transaction processor to a lottery administration system;

Llach in view of Szrek renders obvious this limitation. Ex. 1003, ¶¶223-28.

[U]nique identification information and product information: As discussed above in limitation 2[a], the Llach-Szrek combination uses Llach's POS terminals to scan Szrek's pre-printed lottery ticket to obtain unique identification and product information. Ex. 1003, ¶224.

[T]ransmitting ... information from the POS terminal to a transaction processor: Llach discloses that, after scanning the stored value card's barcode, "a request for activation ... by a point of sale transaction component 104 is made." Ex. 1006, [0020]. This "activation request from the point of sale component 111" at least contains the "stored value card identification," *i.e.* the information obtained from scanning the stored value card's barcode. *Id.*, [0034]. Thus, in the Llach-Szrek combination, the POS terminal sends the activation request with the unique identification and product information obtained from scanning Szrek's pre-printed lottery ticket. Ex. 1003, ¶225.

Llach teaches that the "activation request is communicated to the stored value card transaction computer 150," *i.e.* ***transaction processor***. *Id.*, [0033]. The transaction computer 150 is a ***transaction processor*** because it is ***a processor that processes transactions between two devices***. Llach discloses that the transaction computer 150 "may be implemented on any general-purpose computer with sufficient processing power," and "includes a ***processor*** 582." *Id.*, [0074]. The transaction computer processes transactions between the POS terminal and the card issuers' authorization system, as depicted below in annotated Figure 1. Ex. 1003, ¶226. In particular, as discussed herein, the transaction computer processes activation requests from the POS terminal by forwarding them to the card issuer's authorization system. *Id.*

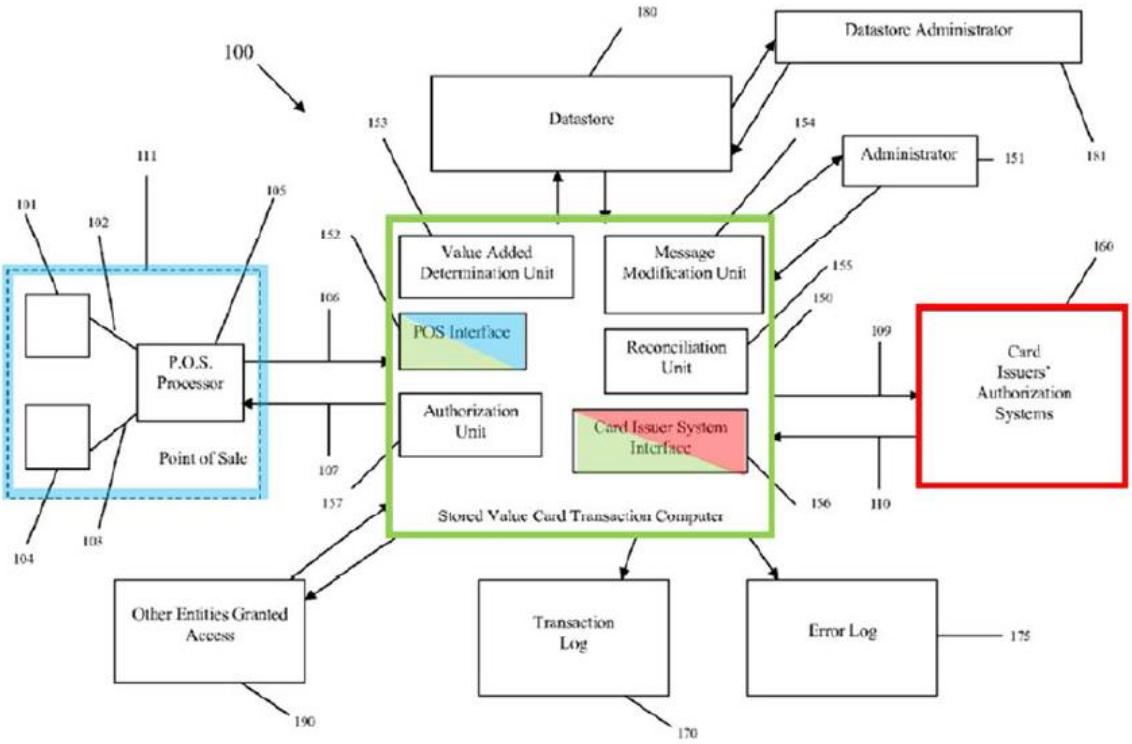

Figure 1

[T]ransmitting ... information from the transaction processor to a lottery administration system: Llach further teaches that, from the transaction computer 150 (*i.e.* ***transaction processor***), the activation request "is then forwarded as message 109 to the appropriate card issuers' authorization system 160 for authorizing the activation request." *Id.*, [0037]; Ex. 1003, ¶227.

In the Llach-Szrek combination, Llach's card issuer's authorization system 160 is modified to perform the same functions as Szrek's gaming provider. These include, as discussed in Ground 1, receiving unique identification information for Szrek's pre-printed lottery ticket, activating the lottery ticket, authorizing winner

payment, sending activation receipt info. Thus, the card issuer's authorization system as modified by Szrek is a ***lottery administration system***. Ex. 1003, ¶228.

(d) 2[d]: receiving at the POS terminal payment confirmation;

Llach discloses this limitation because it discloses that when "a vendor ... ***receives payment from a customer***, then an account associated with the stored value card is credited with the payment amount," *i.e.* ***payment confirmation***. Ex. 1006, [0039]; Ex. 1003, ¶229.. The vendor is where the "point of sale component [is] located." *Id.*, [0019].

(e) 2[e]: transmitting payment confirmation from the POS terminal to the transaction processor;

2[f]: transmitting payment confirmation from the transaction processor to the lottery administration system;

Llach discloses these limitations. Ex. 1003, ¶¶230-232.

[T]ransmitting payment confirmation from the POS terminal to the transaction processor: Llach discloses that the transaction computer 150 (*i.e.* ***transaction processor***) "generate[s] and maintain[s] a transaction log 170," which includes "a detailed summary of ... requested stored-value card activations; ... the ***monetary amount ascribed to card activations***." Ex. 1006, [0026]. Llach further discloses that "[t]he information contained in the transaction log 170 may be used to generate ... ***payment reports***." *Id.*, [0027]. A POSITA would therefore understand

that the transaction computer 150 receives payment confirmation in order to maintain a transaction log detailing requested activations and monetary amounts ascribed to those activations, from which a ***payment report*** is generated. Ex. 1003, ¶231. A POSITA would understand that such payment confirmation would have been transmitted from the ***POS terminal***, as Llach teaches that is where payment is received. *Id.*; Ex. 1006, [0039].

[T]ransmitting payment confirmation from the transaction processor to the lottery administration system: Llach teaches that the payment reports (*i.e.* ***payment confirmation***) are generated by the ***transaction processor*** "for the benefit of, use by, or for ***provision*** to ... card issuers' authorization systems 160," *i.e.* ***lottery administration system***. Ex. 1006, [0027]. A POSITA would understand that, since the transaction computer generates the payment report for provision to the authorization system, it transmits the payment report to the authorization system. Ex. 1003, ¶232.

(f) 2[g]: receiving by the transaction processor from the lottery administration system draw details associated with the pre-printed lottery ticket;

2[h] receiving at the POS terminal from the transaction processor draw details associated with the pre-printed lottery ticket; and

Llach in view of Szrek render obvious these limitations. Ex. 1003, ¶¶233-35.

[R]eceiving by the transaction processor from the lottery administration / [R]eceiving at the POS terminal from the transaction processor: Llach teaches that, following activation of the stored value card by the authorization system 160 (*i.e.* ***lottery administration system***), the authorization system will send "messages 110 ... intended for the ***point of sale component*** 111 [which] include any information regarding value added to the stored value card that may be printed on the receipt generated for the customer." Ex. 1006, [0038]. Llach further teaches that it is the transaction computer's message modification component 154 (*i.e.* ***transaction processor***) that receives these messages from the authorization system before forwarding them to the POS system. *Id.*; Ex. 1003, ¶234.

[D]raw details associated with the pre-printed lottery ticket: As discussed above in Ground 1 for limitation 1[e], Szrek teaches ***draw details*** such as "draw number or draw time" are sent by Szrek's game provider following activation of a pre-printed lottery ticket. Ex. 1005, 6:54-59. Llach's card issuer's authorization system 160 is modified to perform the same functions as Szrek's gaming provider, including sending draw details. Ex. 1003, ¶235.

(g) 2[i]: printing the draw details on a receipt.

Llach in view of Szrek renders obvious this limitation. Llach itself teaches that "messages 110 ... intended for the ***point of sale component*** 111 [which] include any information regarding value added to the stored value card that may be ***printed***

on the receipt generated for the customer." Ex. 1006, [0038]. When combined with Szrek, it is the draw details received from the transaction processor which are printed on the receipt. Ex. 1003, ¶236.

Moreover, as discussed above in Ground for limitation 1[f], Szrek discloses printing the draw details on a receipt. In view of these teachings, a POSITA would further combine Llach and Szrek such that the draw details are printed on a receipt. Ex. 1003, ¶237.

3. Claim 1

Claim 1 is identical to Claim 2 except that it does not recite a transaction processor that receives and forwards information between the POS terminal and lottery administration system. However, because Claim 1's limitations of "transmitting the unique identification information and product information from the POS terminal to a lottery administration system," "transmitting payment confirmation from the POS terminal to the lottery administration system," and "receiving at the POS terminal from the lottery administration system draw details associated with the pre-printed lottery ticket" do not *preclude* the use of a transaction processor as part of the step of transmitting or receiving information, Claim 1 is rendered obvious by Llach in view of Szrek for the same reasons discussed for claim 2. Ex. 1003, ¶238.

4. Claim 3: The method of claim 1 or 2, further comprising transmitting the draw details by the lottery administration

system, wherein transmitting the draw details generating at the lottery administration system an image or data package containing at least the draw details.

Llach in view of Szrek renders obvious this limitation. As discussed above in Ground 1 for claim 3, Szrek renders obvious this claim. Thus, in the combination of Llach and Szrek, Llach's card issuer's authorization system 160 is modified to perform the same functions as Szrek's gaming provider, which would include transmitting draw details using a data packaging. Ex. 1003, ¶239.

5. Claim 4

(a) Corresponding Limitations

Several limitations from claim 4 are substantively similar to limitations from claim 2, as set forth in the following chart. While the limitations may not be identical, Szrek discloses each of these limitations in claim 4 for the same reasons set forth above. Ex. 1003, ¶¶240-49. The remaining limitations from claim 4 are separately addressed.

Claim Limitation	Corresponding Claim Limitation(s)
4[pre]	2[b]
4[b]	2[c]
4[e]	2[f]
4[f]	2[g]

(b) 4[a]

Llach discloses that the authorization system 160 (*i.e.* ***lottery administration system***) comprises a communication interface, a processing unit, and a memory unit. Ex. 1003, ¶¶241-45.

[C]ommunication interface: Llach discloses that "the stored value card transaction computer 150 may communicate with the card issuers' authorization system 160 via, for example, the Internet, a Public Switched Telephone Network (PSTN), or an independent dedicated network." Ex. 1006, [0018]. Figure 1 likewise depicts that authorization system 160 communicates with transaction computer 150. A POSITA would therefore understand that the activation system 160 comprises a ***communication interface for communicating with other computing systems***. Ex. 1003, ¶242.

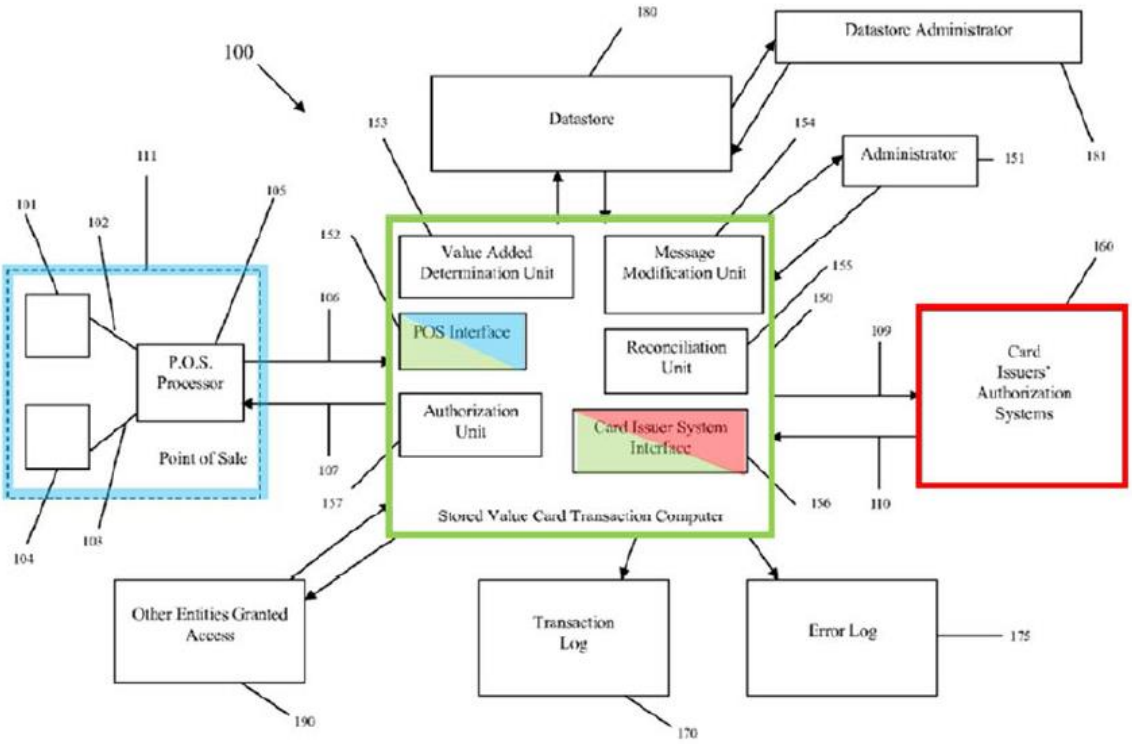

Figure 1

[A] processing unit: Llach discloses that the authorization system performs a number of computing functions, including those discussed above in claims 1-3 as well as "effectuat[ing] activation or deactivation of the transaction cards secured by the package as well as to effectuate the addition of a value added service, product, or cash value amount." Ex. 1006, [0030]. Moreover, in the proposed combination, the authorization system is modified to perform the same functions as Szrek's game provider. Ex. 1003, ¶243. A POSITA would understand that these processes would require ***processing unit for executing instructions***. *Id.*

[A] memory unit: A POSITA would also understand that in order for Llach's authorization system to perform processes, it would require ***a memory unit for storing instructions*** that the processing unit executed. Ex. 1003, ¶244.

[W]hich when executed .... *See, supra*, limitations 2[pre], 2[g]. *Id.*, ¶245.

(c) 4[c]: determining at the lottery administration system draw information for a subsequent draw being held,

As discussed above in Ground 1 for limitation 4[c], Szrek discloses that its game provider ***determines draw information for a subsequent draw being held***. In the Llach-Szrek combination, Llach's card issuer's authorization system 160 is modified to perform the same functions as Szrek's gaming provider. These include determining draw information for a subsequent draw being held. Ex. 1003, ¶247.

(d) 4[d]: associating at the lottery administration system the determined draw information with the unique identification information,

See, supra, limitation 2[g], 2[a]; Ground 1, limitation 1[e]. Llach in view of Szrek teaches draw information and unique identification information associated with the pre-printed lottery ticket, and therefore the modified authorization system associates draw information with unique identification information. Ex. 1003, ¶248.

6. Claim 5

(a) Corresponding Limitations

Several limitations from claim 5 are substantively similar to limitations from claim 2, as set forth in the following chart. While the limitations may not be

identical, Szrek discloses each of these limitations in claim 5 for the same reasons set forth above. Ex. 1003, ¶¶251-61. The remaining limitations from claim 5 are separately addressed.

Claim Limitation	**Corresponding Claim Limitation(s)**
5[pre]	2[pre], 2[a]
5[b]	2[a]
5[c]	2[b], 2[c]
5[d]	2[d], 2[e], 2[f]
5[e]	2[g], 2[h]
2[f]	2[i]

(b) 5[a]

Llach discloses that a POS terminal comprises a communication interface, a processing unit, and a memory unit. Ex. 1003, ¶¶252-56.

[C]ommunication interface: Llach discloses that "[t]he ***point of sale processing component 105*** is connectable to the stored value card transaction computer 150 via a suitable network, such as the Internet, the public switched telephone network (PSTN), or an independent dedicated network." Ex. 1006, [0021]. Figure 1 likewise depicts that POS terminal communicates with transaction computer 150. A POSITA would therefore understand that the POS terminal comprises a ***communication interface for communicating with other computing systems***. Ex. 1003, ¶253.

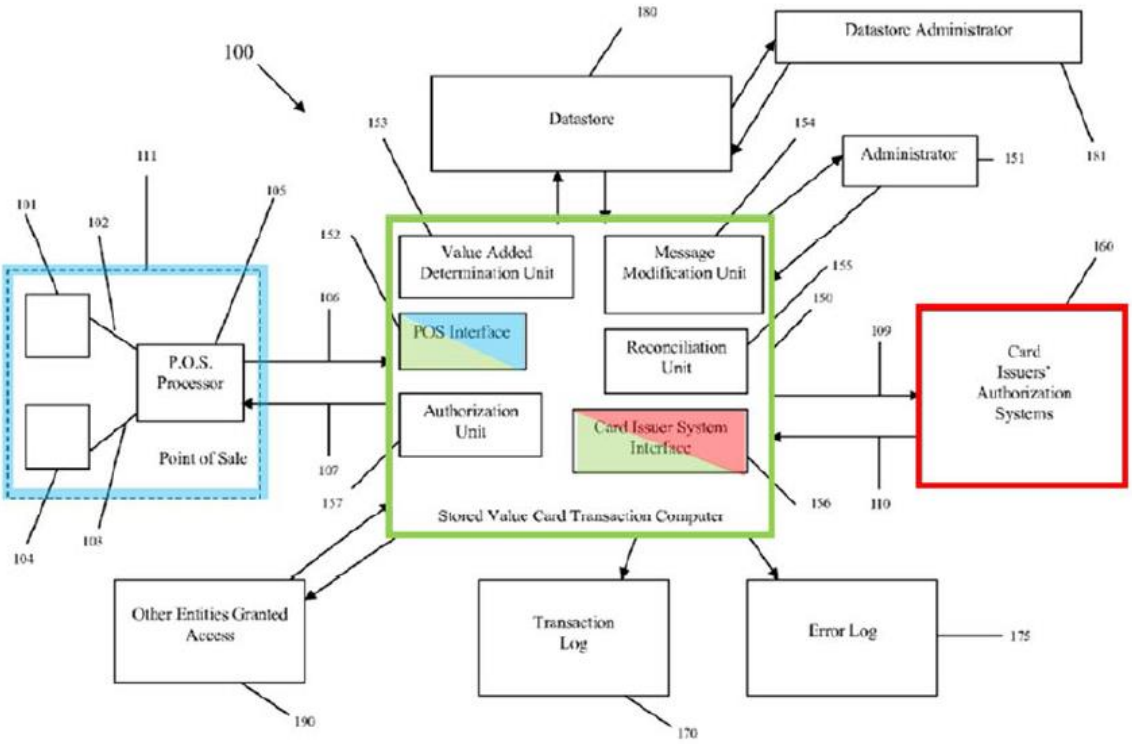

Figure 1

[A] processing unit: Figure 1 depicts that the POS terminal comprises a "P.O.S. Processor." Llach further discloses that "[t]he point of sale processing component 105 can comprise a CPU or other type of processing device accepted for use in the industry." Ex. 1006, [0021]; Ex. 1003, ¶254.

[A] memory unit: A POSITA would also understand that in order for Llach's POS terminal to perform processes, it would require ***a memory unit for storing instructions*** that the processing unit executed. Ex. 1003, ¶255.

[W]hich when executed .... *See, supra*, limitations 2[pre], 2[a]. Ex. 1003, ¶256.

7. Claim 6

(a) Corresponding Limitations

Several limitations from claim 6 are substantively similar to limitations from claim 2, as set forth in the following chart. While the limitations may not be identical, Szrek discloses each of these limitations in claim 6 for the same reasons set forth above. Ex. 1003, ¶¶262-74. The remaining limitations from claim 6 are separately addressed.

Claim Limitation	Corresponding Claim Limitation(s)
6[pre]	2[b]
6[b]	2[a]
6[c]	2[b]
6[d]	2[c]
6[e]	2[d]
6[f]	2[e]
6[g]	2[f]
6[h]	2[g]
6[i]	2[h]
6[j]	2[i]

(b) 6[a]

Llach discloses that the transaction computer (*i.e.* ***transaction processor***) comprises a communication interface, a processing unit, and a memory unit. Ex. 1003, ¶¶263-65. Specifically, Llach discloses that "[t]he stored value card

transaction computer 150 above may be implemented on any general-purpose computer with sufficient ***processing power, memory resources, and network throughput*** capability to handle the necessary workload placed upon it." Ex. 1006, [0074]; Ex. 1003, ¶264. Llach further discloses that the transaction computer "includes a processor 582 (which may be referred to as a central processor unit or CPU) that is in communication with memory devices including secondary storage 584, read only memory (ROM) 586, random access memory (RAM) 588, input/output (I/O) 590 devices, and network connectivity devices 592." *Id.*

[W]hich when executed ...: *See, supra*, limitations 2[pre], 2[b]. Ex. 1003, ¶265.

X. MANDATORY NOTICES AND FEES

A. Real Party-In-Interest

The real party-in-interest for Petitioner is Interactive Communications International, Inc.

B. Related Matters

1. Related Patent Office Proceedings

PGR2020-00084 and PGR2020-00085 were proceedings brought by Petitioner against U.S. Pat. No. 10,769,894, which issued from a child application of the '135 patent. In PGR2020-00084, institution was granted and the Board has issued a Final Written Decision finding all challenged claims unpatentable. In PGR2020-00085, institution was denied.

2. Related Litigation

Blackhawk Network, Inc. v. Interactive Communications International, Inc., No. 2022-1650 (Fed. Cir.) is the appeal from PGR2020-00084. On June 7, 2023, the Federal Circuit issued a non-precedential opinion affirming the Board's Final Written Decision.

Blackhawk Network, Inc. v. SL Card Company Inc., No. 2:21-cv-00813-PHX-MTL (Superior Court of Ariz.) is a lawsuit brought by Patent Owner in the Superior Court of Arizona asserting a Breach of Contract claim against SL Card, a company that an affiliate of Petitioner acquired on March 12, 2019. In the Litigation, Patent Owner alleges that SL Card breached a Product Distribution Agreement after SL Card's then-parent company, Linq3 Technologies LLC, filed patent applications directed to and marketed a product purportedly derived from products Blackhawk claims to be protected by the '135 and '894 patents. Patent Owner does not allege infringement of any patent.

C. Counsel and Service Information

Petitioner provides the following counsel and service information. Petitioner consents to electronic service the email addresses listed in the table below. Pursuant to 37 C.F.R. § 42.10(b), a Power of Attorney accompanies this Petition.

LEAD COUNSEL	BACK-UP COUNSEL
James M. Glass (Reg. No. 46729) jimglass@quinnemanuel.com QUINN EMANUEL URQUHART & SULLIVAN, LLP 51 Madison Avenue, 22nd Floor New York, NY 10010 Tel: (212) 849-7000 Fax: (212) 849-7100	Quincy Lu (Reg. No 76,954) quincylu@quinnemanuel.com QUINN EMANUEL URQUHART & SULLIVAN, LLP 1109 First Avenue, Suite 210 Seattle, WA 98101 Tel: (206) 905-7000 Fax: (206) 905-7100

D. Payment of Fees

The undersigned authorizes the Office to charge the fee required for this Petition for *Inter Partes* Review to Deposit Account No. 50-5708. Any additional fees that might be due are also authorized.

XI. CONCLUSION

Petitioner requests institution of an IPR and cancellation of the Challenged Claims.

Date: July 21, 2023

Respectfully submitted,

By: /s/ *James M. Glass*
James M. Glass

Counsel for Petitioner

CERTIFICATE OF COMPLIANCE WITH TYPE-VOLUME LIMITATION, TYPEFACE REQUIREMENTS, AND TYPE STYLE REQUIREMENTS

1. This Petition complies with the type-volume limitation of 14,000 words, comprising 13,995 words, as counted using the Microsoft Word software that was used to prepare this paper, excluding the parts exempted by 37 C.F.R. § 42.24(a).

2. This Petition complies with the general format requirements of 37 C.F.R. § 42.6(a) and has been prepared using Microsoft® Word 2016 in 14-point Times New Roman.

Date: July 21, 2023

By: */s/ James M. Glass*

James M. Glass
QUINN EMANUEL URQUHART
& SULLIVAN, LLP
51 Madison Avenue, 22nd Floor
New York, NY 10010
Tel: (212) 849-7000
Fax: (212) 849-7100

Counsel for Petitioner

CERTIFICATE OF SERVICE

The undersigned hereby certifies that on July 21, 2023, true and correct copies of the foregoing document and supporting materials were served in its entirety on the Patent Owner at the following address of record as listed on PAIR via Priority Mail Express® or Express Mail:

Barges & Thornburg LLP
(Blackhawk)
11 S. Meridian St.
Indianopolis, IN 46204
Official Correspondence Address

Date: July 21, 2023

By: */s/ James M. Glass*
James Glass
QUINN EMANUEL URQUHART
& SULLIVAN, LLP
51 Madison Avenue, 22nd Floor
New York, NY 10010
Tel: (212) 849-7000
Fax: (212) 849-7100

Counsel for Petitioner