US010217326B2

(12) **United States Patent**
Cage et al.

(10) **Patent No.: US 10,217,326 B2**
(45) **Date of Patent: *Feb. 26, 2019**

(54) **PROCESSING OF A USER DEVICE GAME-PLAYING TRANSACTION BASED ON LOCATION**

(71) Applicant: **Linq3 Technologies LLC**, Atlanta, GA (US)

(72) Inventors: **Daniel Cage**, Atlanta, GA (US); **John Minutaglio**, Atlanta, GA (US); **Roy Leach**, Elizabeth, CO (US); **David Tashjian**, Fort Lauderdale, FL (US); **Travis L. Smith**, Alpharetta, GA (US); **John Frederick Houseal, Jr.**, Atlanta, GA (US)

(73) Assignee: **LINQ3 TECHNOLOGIES LLC**, Atlanta, GA (US)

(*) Notice: Subject to any disclaimer, the term of this patent is extended or adjusted under 35 U.S.C. 154(b) by 0 days.

This patent is subject to a terminal disclaimer.

(21) Appl. No.: **15/818,569**

(22) Filed: **Nov. 20, 2017**

(65) **Prior Publication Data**

US 2018/0102018 A1 Apr. 12, 2018

Related U.S. Application Data

(63) Continuation-in-part of application No. 15/614,490, filed on Jun. 5, 2017, now Pat. No. 9,824,340, which
(Continued)

(51) **Int. Cl.**
A63F 13/12 (2006.01)
G07F 17/32 (2006.01)
(Continued)

(52) **U.S. Cl.**
CPC ***G07F 17/329*** (2013.01); ***A63F 13/213*** (2014.09); ***A63F 13/216*** (2014.09);
(Continued)

(58) **Field of Classification Search**
USPC 463/25, 29
See application file for complete search history.

(56) **References Cited**

U.S. PATENT DOCUMENTS

4,669,730 A 6/1987 Small
4,815,741 A 3/1989 Small
(Continued)

FOREIGN PATENT DOCUMENTS

CA 2548533 A1 6/2005
CN 102054185 5/2011
(Continued)

OTHER PUBLICATIONS

International Search Report and the Written Opinion dated Feb. 11, 2014 of International Patent Application No. PCT/US2013/058078.
(Continued)

Primary Examiner — Pierre E Elisca
(74) *Attorney, Agent, or Firm* — Baker & McKenzie LLP

(57) **ABSTRACT**

An exemplary method comprises receiving information associated with a game-playing transaction conducted between a user device and a game-playing terminal, wherein the game-playing transaction is associated with a request for playing a game; determining a location of the user device associated with the game; determining the user device is located in an approved location associated with the game; and processing the game-playing transaction based on determining the user device is located in the approved location associated with the game. The game-playing transaction is conducted on a first communication interface, and the information associated with the game-playing transaction is received on a first or second communication interface.

113 Claims, 27 Drawing Sheets

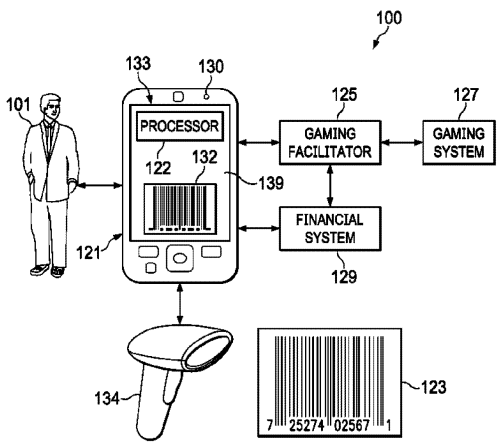

BLACKHAWK EXHIBIT 2019.0001
Incomm v. Blackhawk, IPR2023-01235

Related U.S. Application Data

is a continuation-in-part of application No. 14/958,720, filed on Dec. 3, 2015, now Pat. No. 9,672,697, which is a continuation-in-part of application No. 14/018,276, filed on Sep. 4, 2013, now Pat. No. 9,227,136, application No. 15/818,569, filed on Nov. 20, 2017, which is a continuation-in-part of application No. 14/856,421, filed on Sep. 16, 2015, now abandoned.

(60) Provisional application No. 61/696,533, filed on Sep. 4, 2012, provisional application No. 62/458,457, filed on Feb. 13, 2017.

(51) **Int. Cl.**

H04W 4/02	(2018.01)
G06K 7/14	(2006.01)
G06Q 20/04	(2012.01)
G06Q 20/32	(2012.01)
G06Q 50/00	(2012.01)
G06Q 30/06	(2012.01)
G06Q 30/02	(2012.01)
A63F 13/216	(2014.01)
A63F 13/213	(2014.01)
A63F 13/92	(2014.01)
A63F 13/73	(2014.01)

(52) **U.S. Cl.**

CPC ***A63F 13/73*** (2014.09); ***A63F 13/92*** (2014.09); ***G06K 7/1413*** (2013.01); ***G06Q 20/0453*** (2013.01); ***G06Q 20/3224*** (2013.01); ***G06Q 20/3276*** (2013.01); ***G06Q 30/0209*** (2013.01); ***G06Q 30/0609*** (2013.01); ***G06Q 50/01*** (2013.01); ***G07F 17/3209*** (2013.01); ***G07F 17/3218*** (2013.01); ***G07F 17/3223*** (2013.01); ***G07F 17/3225*** (2013.01); ***G07F 17/3237*** (2013.01); ***G07F 17/3239*** (2013.01); ***G07F 17/3255*** (2013.01); ***H04W 4/02*** (2013.01)

(56) **References Cited**

U.S. PATENT DOCUMENTS

4,833,307	A	5/1989	Gonzalez-Justiz	
5,083,272	A	1/1992	Walker et al.	
5,216,595	A	6/1993	Protheroe	
5,330,185	A	7/1994	Wells	
5,417,424	A	5/1995	Snowden et al.	
5,890,718	A	4/1999	Byon	
5,897,625	A	4/1999	Gustin et al.	
5,919,091	A	7/1999	Bell et al.	
5,935,000	A	8/1999	Sanchez, III	
6,277,026	B1	8/2001	Archer	
6,304,860	B1	10/2001	Martin et al.	
6,322,446	B1	11/2001	Yacenda	
6,364,206	B1	4/2002	Keohane	
6,507,823	B1	1/2003	Nel	
6,508,710	B1	1/2003	Paravia et al.	
6,547,131	B1	4/2003	Foodman et al.	
6,585,589	B2	7/2003	Okuniewicz	
6,607,439	B2	8/2003	Schneier et al.	
6,616,531	B1	9/2003	Mullins et al.	
6,824,464	B2	11/2004	Weil et al.	
6,869,358	B2	3/2005	Yacenda	
7,168,616	B2	1/2007	Carnation	
7,177,428	B2	2/2007	Gordon et al.	
7,547,251	B2	6/2009	Walker et al.	
7,621,810	B2	11/2009	Gilmore et al.	
8,103,520	B2	1/2012	Mueller et al.	
8,219,497	B2	7/2012	Crucs	
8,408,986	B2	4/2013	Irwin et al.	
8,775,814	B2	7/2014	Bidare et al.	
8,784,180	B2	7/2014	Stanek	
9,098,190	B2 *	8/2015	Zhou	G06Q 20/3829
9,227,136	B2	1/2016	Cage et al.	
9,672,687	B2	6/2017	Cage et al.	
9,672,697	B2	6/2017	Cage et al.	
9,865,135	B2	1/2018	Giunti	
2001/0045456	A1	11/2001	Smith	
2002/0062249	A1	5/2002	Iannacci et al.	
2002/0094858	A1	7/2002	Yacenda	
2002/0145039	A1	10/2002	Carroll	
2002/0165023	A1	11/2002	Brosnan et al.	
2003/0186734	A1	10/2003	LeMay et al.	
2003/0228910	A1	12/2003	Jawaharlal et al.	
2003/0236749	A1	12/2003	Shergalis	
2004/0002383	A1	1/2004	Lundy et al.	
2004/0014514	A1	1/2004	Yacenda et al.	
2004/0185881	A1	9/2004	Lee et al.	
2004/0259626	A1	12/2004	Akram	
2004/0267663	A1	12/2004	Karns et al.	
2005/0054438	A1	3/2005	Rothschild et al.	
2005/0143163	A1	6/2005	Yacenda	
2005/0149393	A1	7/2005	Loef et al.	
2005/0153779	A1	7/2005	Ziegler	
2005/0167488	A1	8/2005	Higgins et al.	
2005/0211764	A1	9/2005	Barcelou	
2005/0215306	A1	9/2005	O'Donnell et al.	
2005/0233797	A1	10/2005	Gilmore et al.	
2005/0261058	A1	11/2005	Nguyen et al.	
2007/0060284	A1	3/2007	Yacenda	
2007/0083466	A1	4/2007	Crowell et al.	
2007/0117609	A1	5/2007	White et al.	
2007/0155489	A1	7/2007	Beckley et al.	
2007/0156436	A1	7/2007	Fisher et al.	
2008/0079573	A1	4/2008	Bloebaum et al.	
2008/0167060	A1	7/2008	Moshir et al.	
2008/0194311	A1	8/2008	Cage et al.	
2008/0139306	A1	12/2008	Lutnick et al.	
2009/0017893	A1	1/2009	Carson	
2009/0037743	A1	2/2009	Narayanaswami et al.	
2009/0042633	A1	2/2009	Yacenda	
2009/0093292	A1	4/2009	Randhawa	
2009/0111378	A1	4/2009	Sheynman et al.	
2009/0137304	A1	5/2009	Yacenda	
2009/0144161	A1	6/2009	Fisher	
2009/0227320	A1	9/2009	McBride	
2009/0239657	A1	9/2009	Ryan et al.	
2010/0062826	A1	3/2010	Walker et al.	
2010/0069136	A1	3/2010	Safaei et al.	
2010/0082490	A1	4/2010	Rosenblatt et al.	
2010/0093421	A1	4/2010	Nyman et al.	
2010/0075735	A1	5/2010	Luciano et al.	
2010/0151930	A1 *	6/2010	Oram	G06Q 30/0207 463/17
2010/0203943	A1	8/2010	Hughes	
2010/0222125	A1	9/2010	Nyman et al.	
2010/0255902	A1 *	10/2010	Goldstein	G07F 17/32 463/29
2010/0264499	A1	10/2010	Goodelle et al.	
2011/0034229	A1	2/2011	Guziel et al.	
2011/0034252	A1	2/2011	Morrison et al.	
2011/0081958	A1	4/2011	Herrmann et al.	
2011/0105213	A1	5/2011	Irwin et al.	
2011/0202419	A1	8/2011	Mamdani et al.	
2011/0246284	A1	10/2011	Chaikin et al.	
2011/0251892	A1	10/2011	Laracey et al.	
2011/0258075	A1	10/2011	Ciurea et al.	
2012/0069471	A1	4/2012	Comparelli et al.	
2012/0089468	A1	4/2012	Guziel	
2012/0184354	A1	7/2012	Brosnan et al.	
2012/0202571	A1	8/2012	Stanek et al.	
2012/0244930	A1	9/2012	Cage et al.	
2012/0264499	A1 *	10/2012	Walker	G07F 17/32 463/19
2012/0276976	A1	11/2012	Yoo et al.	
2013/0072280	A1	3/2013	Yacenda	
2013/0073388	A1	3/2013	Heath	
2013/0196733	A1	8/2013	Cage et al.	
2013/0196734	A1	8/2013	Cage et al.	

(56) **References Cited**

U.S. PATENT DOCUMENTS

2013/0217462	A1	8/2013	Cage et al.	
2013/0281190	A1	10/2013	Cage et al.	
2014/0066194	A1	3/2014	Cage et al.	
2014/0155172	A1	6/2014	Stoilkovich et al.	
2014/0256422	A9*	9/2014	Saunders	A63F 13/12 463/29
2014/0274314	A1	9/2014	Cage et al.	
2014/0378204	A1	12/2014	Michel et al.	
2015/0238857	A1*	8/2015	Amaitis	G07F 17/3218 463/42
2015/0279156	A1	10/2015	Omar	
2016/0042600	A1*	2/2016	Bickley	G07F 17/32 463/25
2016/0086447	A1	3/2016	Cage et al.	
2016/0086453	A1	3/2016	Cage et al.	
2016/0093137	A1	3/2016	Gaddy	
2017/0076293	A1	3/2017	Cage et al.	
2018/0096558	A1	4/2018	Giunti	

FOREIGN PATENT DOCUMENTS

CN	102184501	9/2011
EP	1587014	10/2005
WO	2001099067	12/2001
WO	2004004280	1/2004
WO	2007049283	5/2007
WO	2008092034	7/2008
WO	2012048313	8/2012
WO	2013026997	2/2013

OTHER PUBLICATIONS

International Search Report and the Written Opinion dated Nov. 20, 2014 of International Patent Application No. PCT/US2014/022877.
Supplemental extended Search Report dated Feb. 27, 2015 in European patent application No. 13744174.7.
Vlugt, Erik: "NFC: The "Presence + Intention" Bridge: The Verifone Blog", Apr. 11, 2011, XP55170410.
Tainton, Tom: "Smart Card News", Jun. 1, 2011, XP55168606.
International Search Report and Written Opinion from PCT/US2012/061744 dated Jun. 10, 2014.
International Search Report and Written Opinion from PCT/US2008/051955 dated Aug. 1, 2008.
International Search Report and Written Opinion of PCT/US2013/024475 dated Apr. 12, 2013.
Office Action dated Mar. 25, 2016 in Chinese Patent Application No. 201380057172.6.
Partial Supplementary European Search Report dated Aug. 26, 2015 of European Patent Application No. 12844370.2.
Office Action dated Jul. 27, 2013 in Chinese Patent Application No. 200880009639.9.
Extended European search report dated Dec. 22, 2015 of European patent application 12844370.2.
Substantive Examination Report dated Mar. 2, 2016 in Philippines patent application No. 1/2014/500913.
Notice of Acceptance dated Dec. 1, 2015 in Australia Patent Application No. 2012328881.
Notification of Grant dated Oct. 16, 2015 in Singapore Patent Application No. 11201401751V.
Acceptance of Complete Specification dated May 14, 2015 in South Africa Patent Application No. 2014/03419.
Extended European search report dated Sep. 23, 2016 in European patent application 14770551.1.
Extended European search report dated Jan. 21, 2016 in European patent application 13835153.1.
U.S. Appl. No. 11/734,207.
U.S. Appl. No. 13/280,196.
U.S. Appl. No. 13/757,512.
U.S. Appl. No. 13/829,776.
U.S. Appl. No. 13/839,469.
U.S. Appl. No. 13/839,558.
U.S. Appl. No. 13/842,709.
U.S. Appl. No. 14/018,276.
U.S. Appl. No. 14/856,421.
U.S. Appl. No. 14/958,715.
U.S. Appl. No. 14/958,720.
International Preliminary Report on Patentability dated Mar. 10, 2015 of International Patent Application No. PCT/US2013/058078.
International Preliminary Report on Patentability dated Sep. 15, 2015 of International Patent Application No. PCT/US2014/022877.
International Preliminary Report on Patentability dated Jun. 10, 2014 of International Patent Application No. PCT/US2012/061744.
International Preliminary Report on Patentability dated Jul. 28, 2009 of International Patent Application No. PCT/US2008/051955.
International Preliminary Report on Patentability dated Sep. 15, 2015 of International Patent Application No. PCT/US2013/024475.
European Patent Application No. 14770551.1.
European Patent Application No. 13835153.1.
European Patent Application No. 08713986.1.
Australian Patent Application No. 2008207887.
Australian Patent Application No. 2012328881.
Office Action dated May 12, 2016 for Chinese Patent Application No. 2012800064355.
European Patent Application No. 12844370.2.
European Patent Application No. 13744174.7.
Office Action dated Sep. 7, 2016 for Chinese Patent application No. 201380018680.
U.S. Appl. No. 15/614,486.
U.S. Appl. No. 15/614,490.
Substantive Examination Report dated Sep. 5, 2017 in Philippines patent application No. 1/2015/500472.
International Search Report of PCT/US2018/018071 dated Jul. 16, 2018; 10 pgs.
Written Opinion of the International Searching Authority of PCT/US2018/018071 dated Jul. 16, 2018; 19 pgs.

* cited by examiner

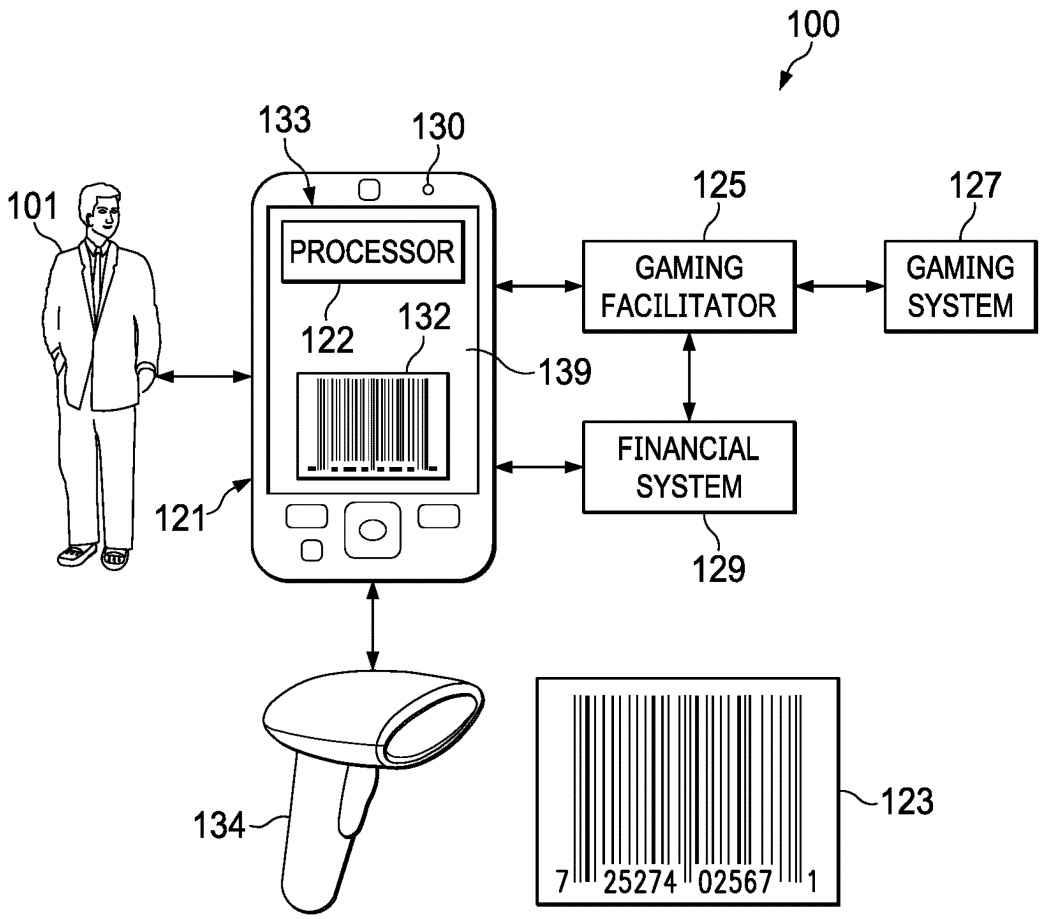
100
133
130
101
PROCESSOR
122
132
139
125
GAMING FACILITATOR
127
GAMING SYSTEM
FINANCIAL SYSTEM
129
121
134
123
7 25274 02567 1

FIG. 1

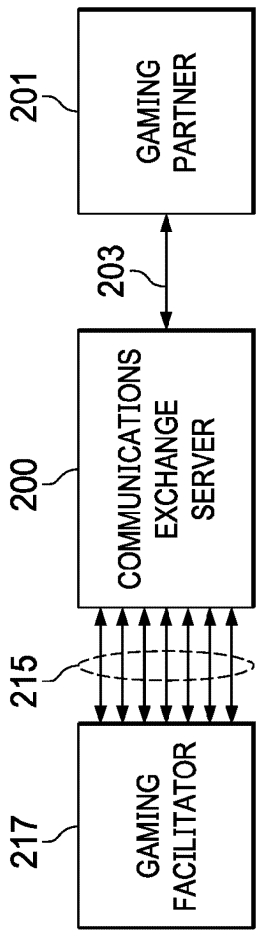
201
GAMING PARTNER
203
200
COMMUNICATIONS EXCHANGE SERVER
215
217
GAMING FACILITATOR

FIG. 2A

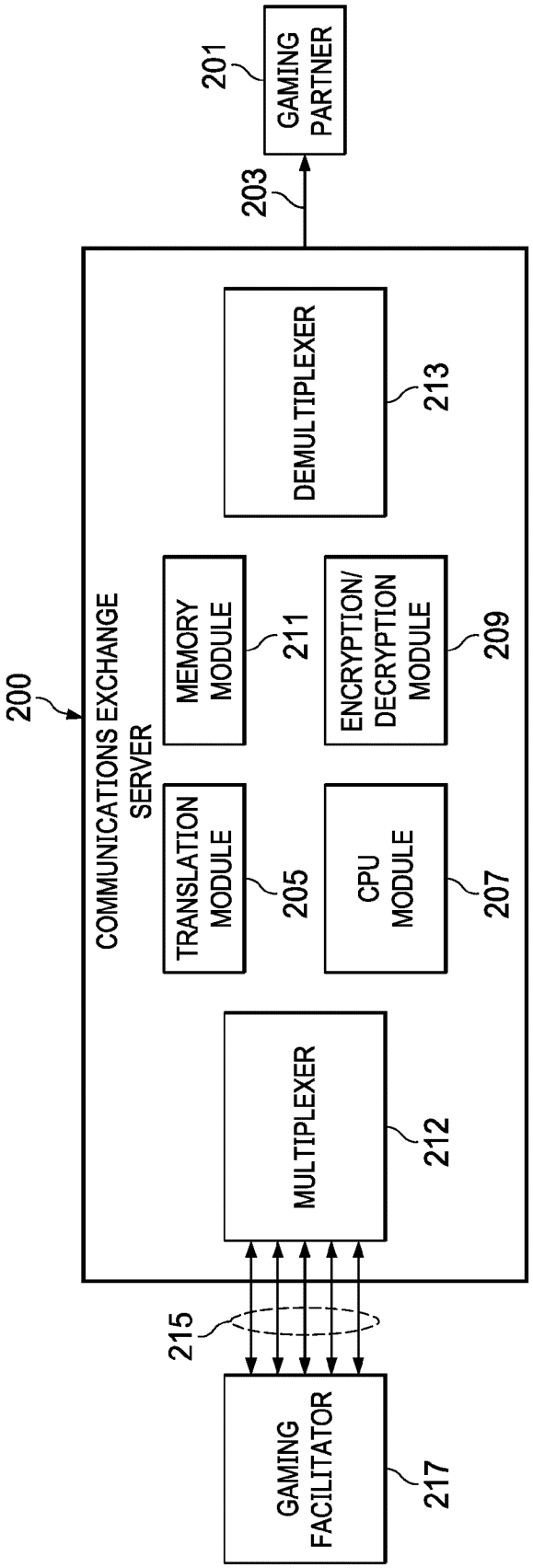
201
GAMING PARTNER
203
200
COMMUNICATIONS EXCHANGE SERVER
DEMULTIPLEXER
213
MEMORY MODULE
211
ENCRYPTION/ DECRYPTION MODULE
209
TRANSLATION MODULE
205
CPU MODULE
207
MULTIPLEXER
212
215
GAMING FACILITATOR
217

FIG. 2B

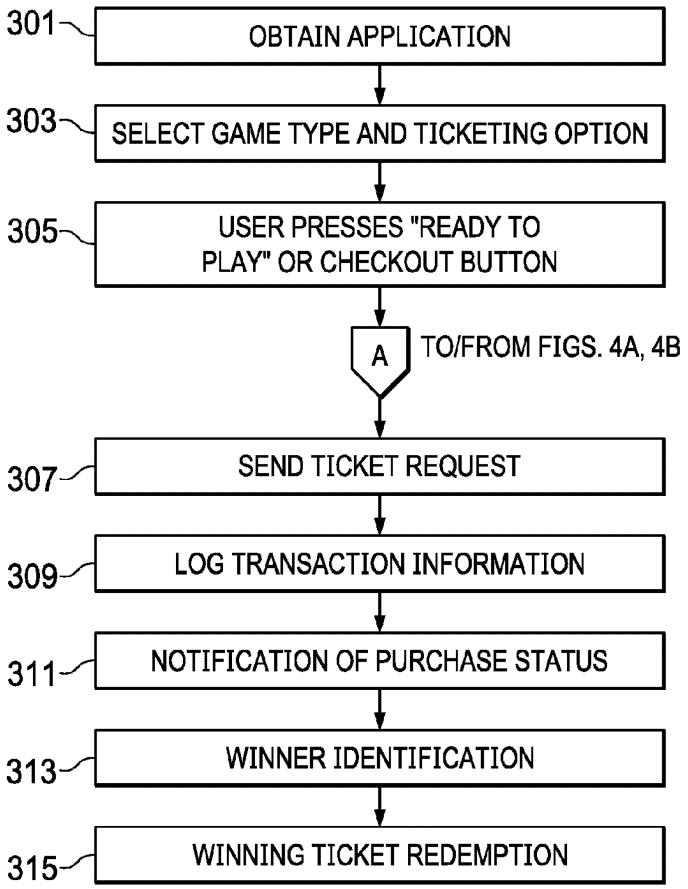

FIG. 3

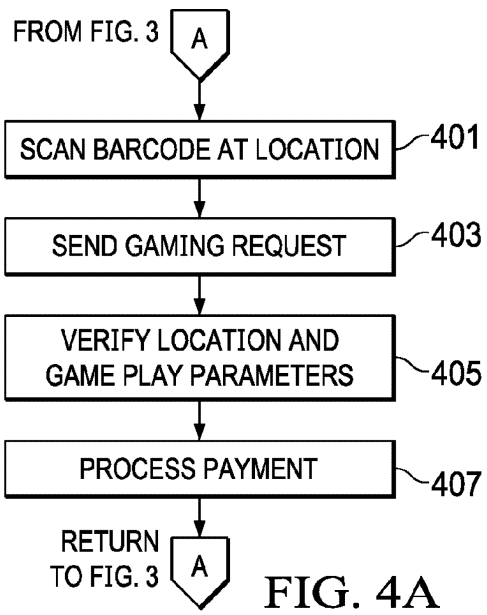

FIG. 4A

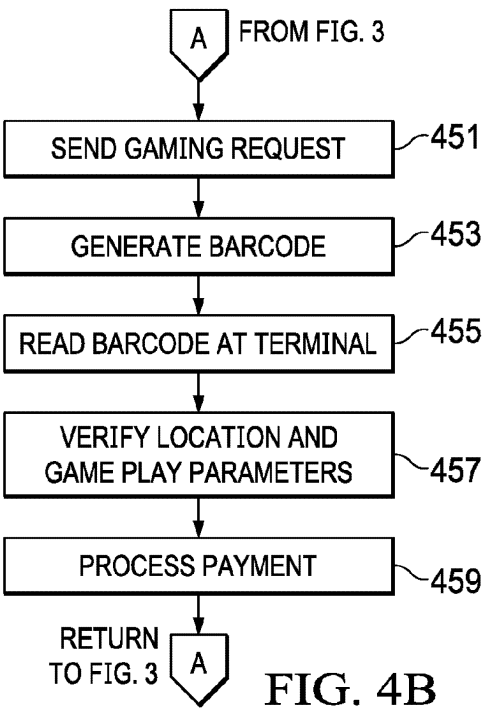

FIG. 4B

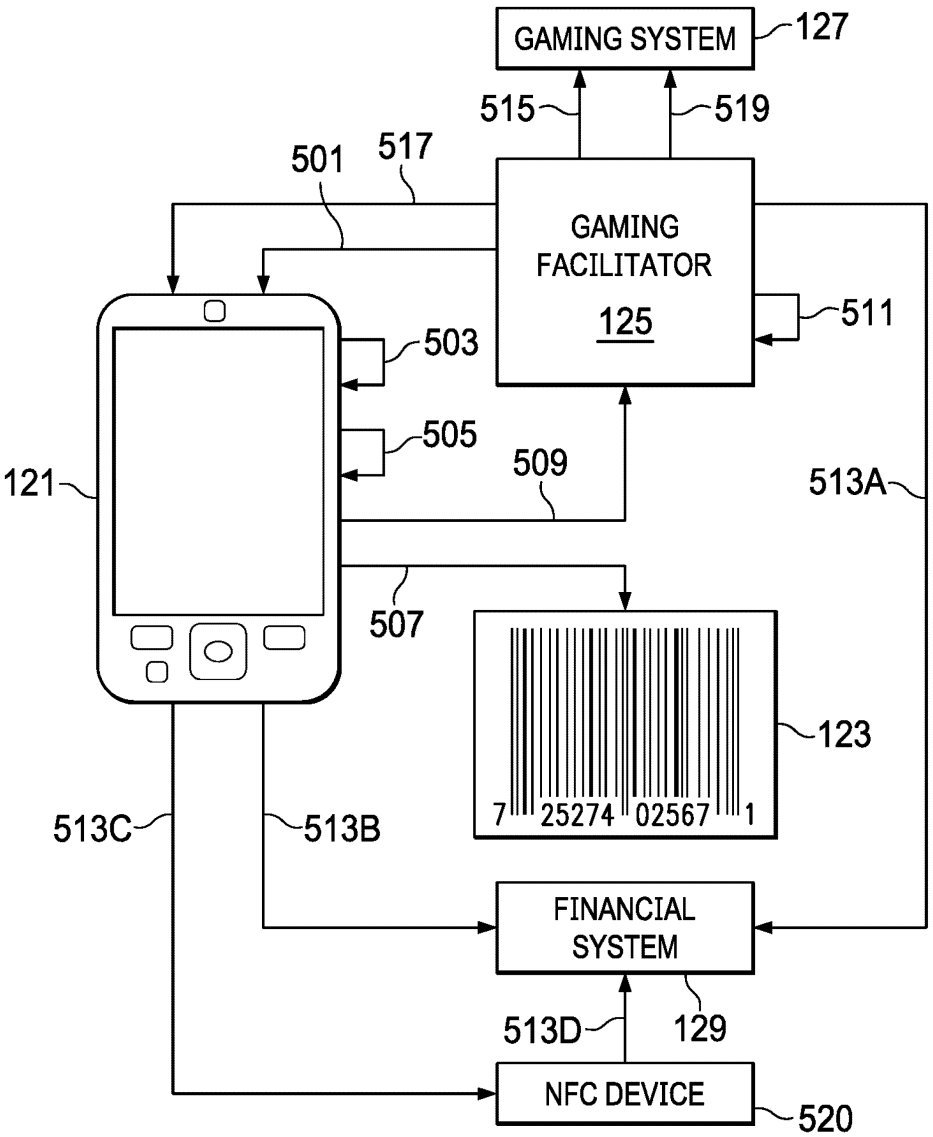
GAMING SYSTEM
127
515
519
501
517
GAMING
FACILITATOR
125
511
503
505
509
121
513A
507
123
7 25274 02567 1
513C
513B
FINANCIAL
SYSTEM
513D
129
NFC DEVICE
520

FIG. 5A

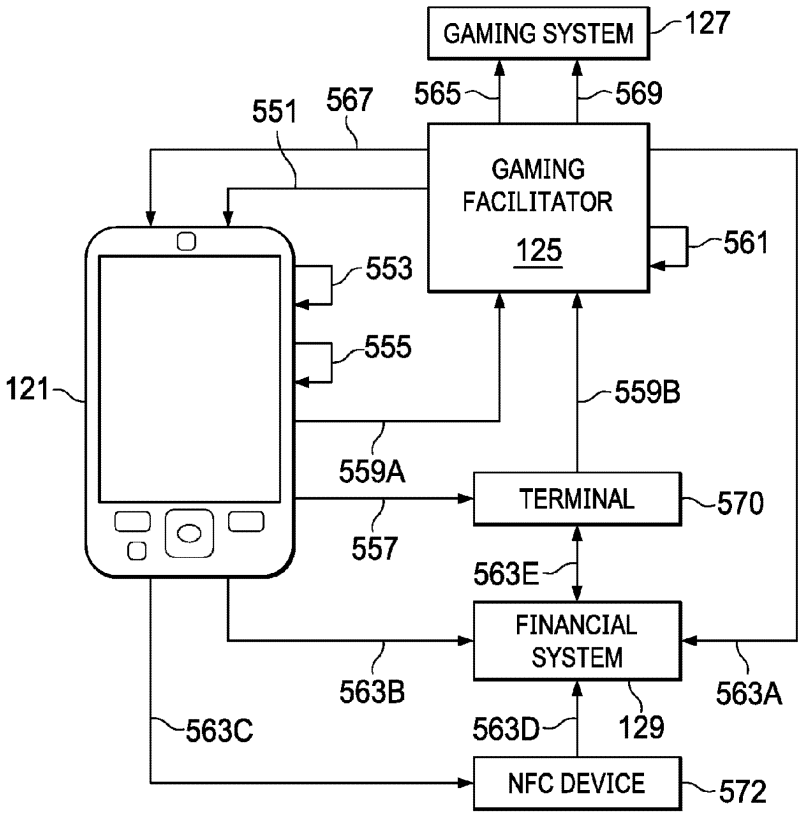

FIG. 5B

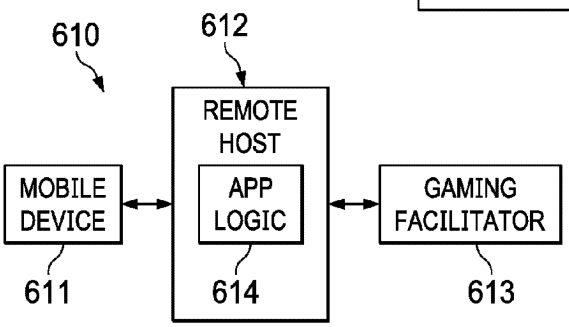

FIG. 6A

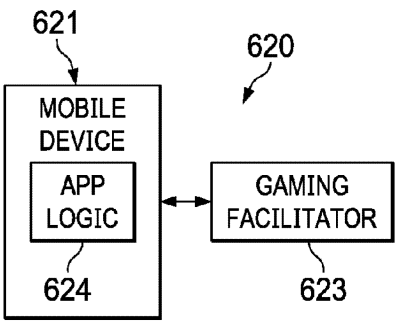

FIG. 6B

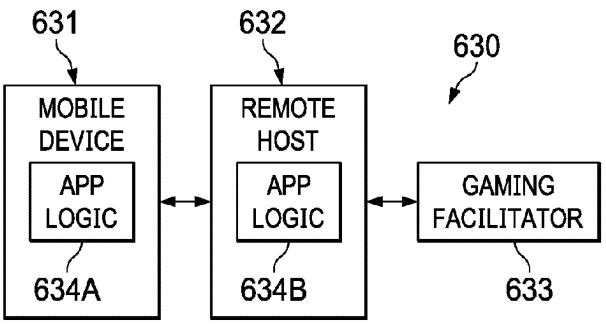

FIG. 6C

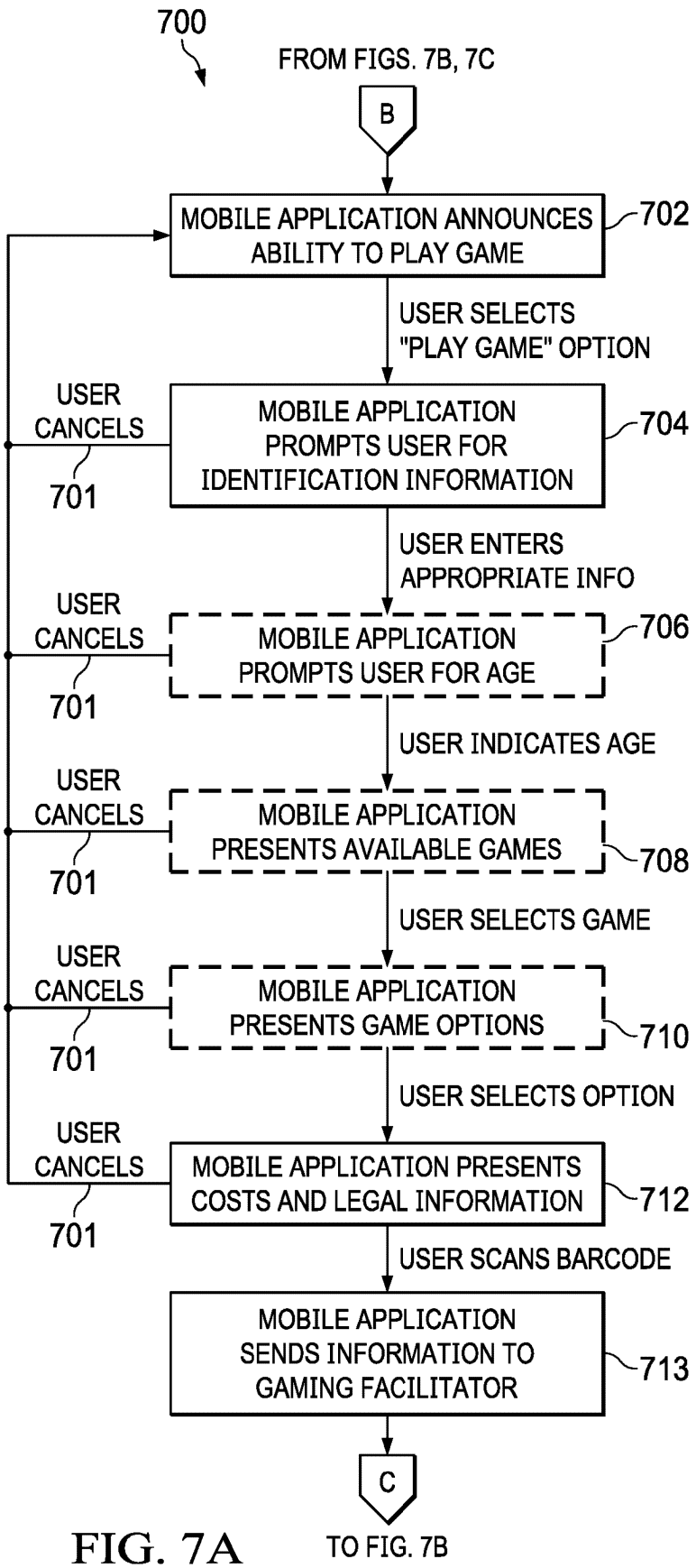
700
FROM FIGS. 7B, 7C
B
MOBILE APPLICATION ANNOUNCES ABILITY TO PLAY GAME
702
USER SELECTS "PLAY GAME" OPTION
USER CANCELS
701
MOBILE APPLICATION PROMPTS USER FOR IDENTIFICATION INFORMATION
704
USER ENTERS APPROPRIATE INFO
USER CANCELS
701
MOBILE APPLICATION PROMPTS USER FOR AGE
706
USER INDICATES AGE
USER CANCELS
701
MOBILE APPLICATION PRESENTS AVAILABLE GAMES
708
USER SELECTS GAME
USER CANCELS
701
MOBILE APPLICATION PRESENTS GAME OPTIONS
710
USER SELECTS OPTION
USER CANCELS
701
MOBILE APPLICATION PRESENTS COSTS AND LEGAL INFORMATION
712
USER SCANS BARCODE
MOBILE APPLICATION SENDS INFORMATION TO GAMING FACILITATOR
713
C
TO FIG. 7B

FIG. 7A

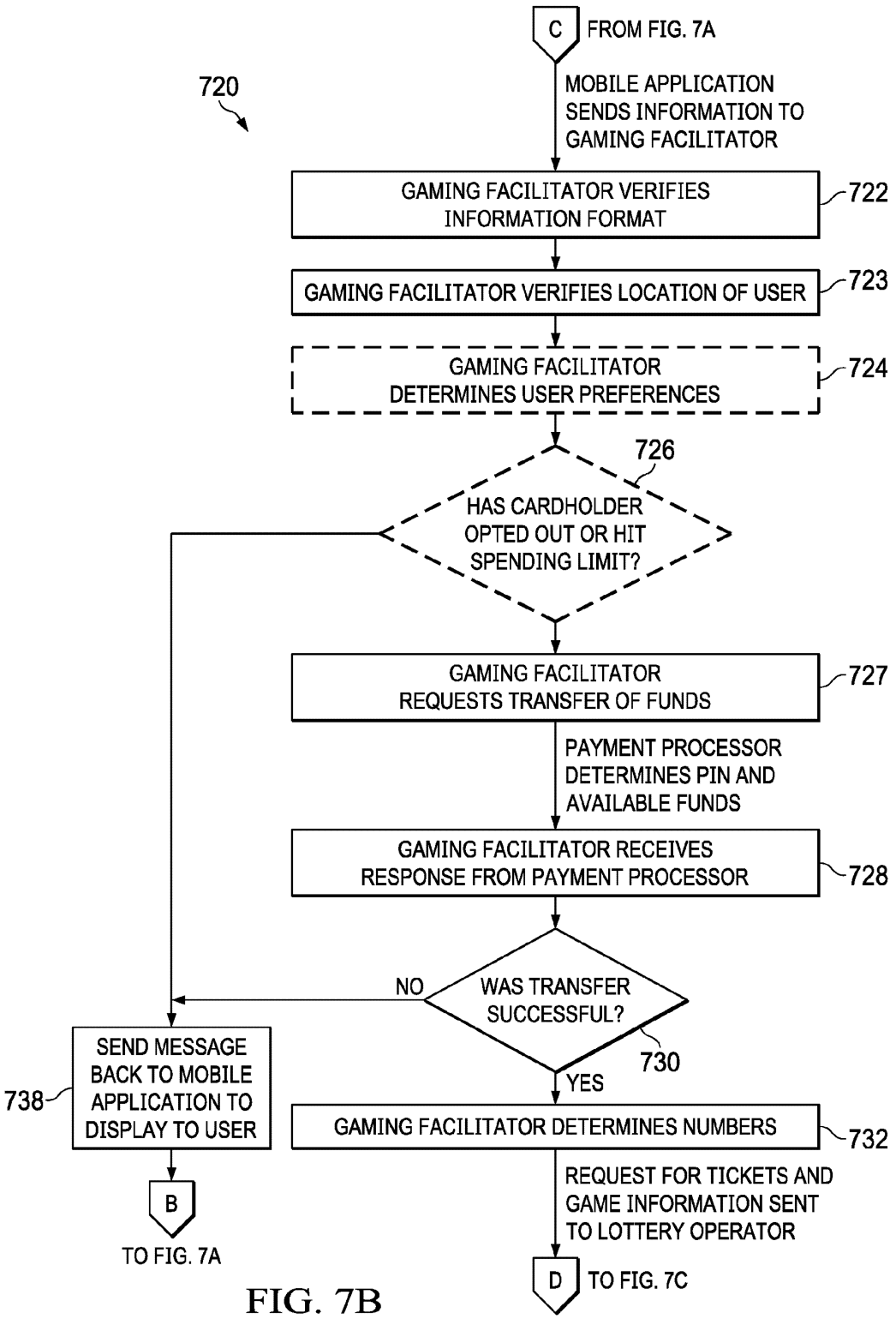
C
FROM FIG. 7A
720
MOBILE APPLICATION SENDS INFORMATION TO GAMING FACILITATOR
GAMING FACILITATOR VERIFIES INFORMATION FORMAT
722
GAMING FACILITATOR VERIFIES LOCATION OF USER
723
GAMING FACILITATOR DETERMINES USER PREFERENCES
724
726
HAS CARDHOLDER OPTED OUT OR HIT SPENDING LIMIT?
GAMING FACILITATOR REQUESTS TRANSFER OF FUNDS
727
PAYMENT PROCESSOR DETERMINES PIN AND AVAILABLE FUNDS
GAMING FACILITATOR RECEIVES RESPONSE FROM PAYMENT PROCESSOR
728
NO
WAS TRANSFER SUCCESSFUL?
730
YES
SEND MESSAGE BACK TO MOBILE APPLICATION TO DISPLAY TO USER
738
GAMING FACILITATOR DETERMINES NUMBERS
732
B
TO FIG. 7A
REQUEST FOR TICKETS AND GAME INFORMATION SENT TO LOTTERY OPERATOR
D
TO FIG. 7C

FIG. 7B

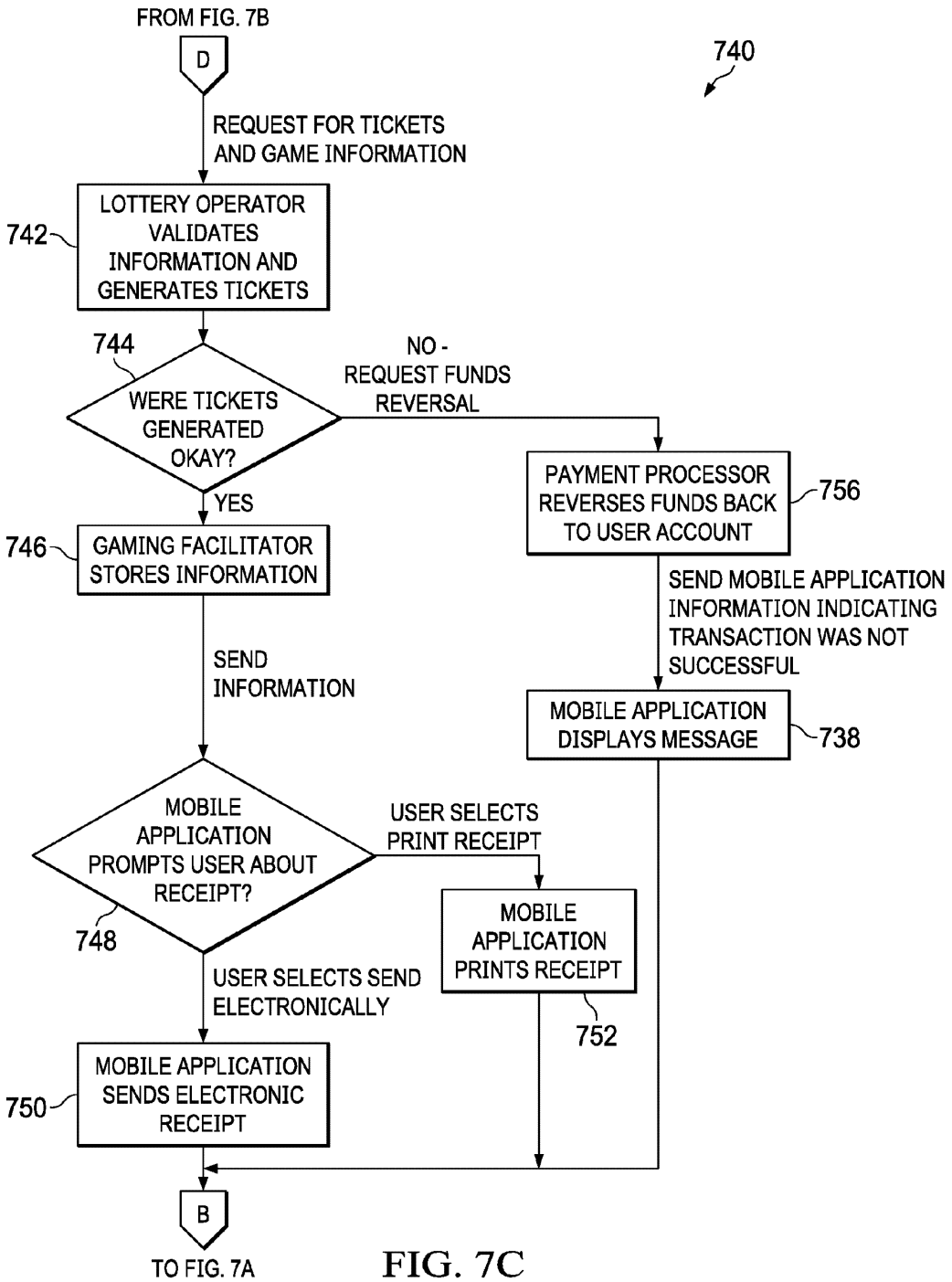
FROM FIG. 7B
D
740
REQUEST FOR TICKETS AND GAME INFORMATION
742
LOTTERY OPERATOR VALIDATES INFORMATION AND GENERATES TICKETS
744
WERE TICKETS GENERATED OKAY?
NO - REQUEST FUNDS REVERSAL
PAYMENT PROCESSOR REVERSES FUNDS BACK TO USER ACCOUNT
756
YES
746
GAMING FACILITATOR STORES INFORMATION
SEND MOBILE APPLICATION INFORMATION INDICATING TRANSACTION WAS NOT SUCCESSFUL
SEND INFORMATION
MOBILE APPLICATION DISPLAYS MESSAGE
738
MOBILE APPLICATION PROMPTS USER ABOUT RECEIPT?
USER SELECTS PRINT RECEIPT
748
MOBILE APPLICATION PRINTS RECEIPT
USER SELECTS SEND ELECTRONICALLY
752
750
MOBILE APPLICATION SENDS ELECTRONIC RECEIPT
B
TO FIG. 7A

FIG. 7C

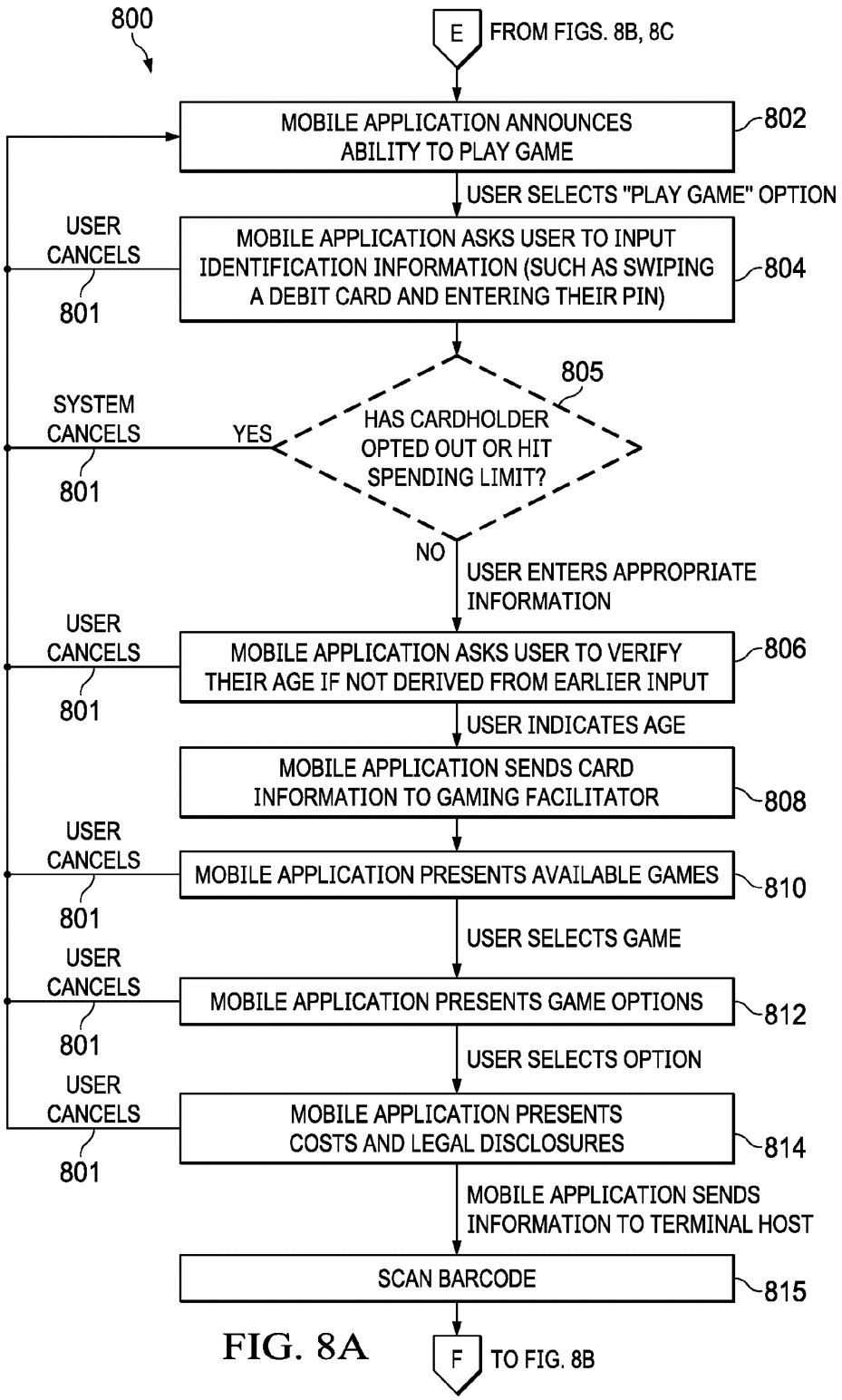
800
E
FROM FIGS. 8B, 8C
MOBILE APPLICATION ANNOUNCES ABILITY TO PLAY GAME
802
USER SELECTS "PLAY GAME" OPTION
USER CANCELS
801
MOBILE APPLICATION ASKS USER TO INPUT IDENTIFICATION INFORMATION (SUCH AS SWIPING A DEBIT CARD AND ENTERING THEIR PIN)
804
805
SYSTEM CANCELS
801
YES
HAS CARDHOLDER OPTED OUT OR HIT SPENDING LIMIT?
NO
USER ENTERS APPROPRIATE INFORMATION
USER CANCELS
801
MOBILE APPLICATION ASKS USER TO VERIFY THEIR AGE IF NOT DERIVED FROM EARLIER INPUT
806
USER INDICATES AGE
MOBILE APPLICATION SENDS CARD INFORMATION TO GAMING FACILITATOR
808
USER CANCELS
801
MOBILE APPLICATION PRESENTS AVAILABLE GAMES
810
USER SELECTS GAME
USER CANCELS
801
MOBILE APPLICATION PRESENTS GAME OPTIONS
812
USER SELECTS OPTION
USER CANCELS
801
MOBILE APPLICATION PRESENTS COSTS AND LEGAL DISCLOSURES
814
MOBILE APPLICATION SENDS INFORMATION TO TERMINAL HOST
SCAN BARCODE
815
F
TO FIG. 8B

FIG. 8A

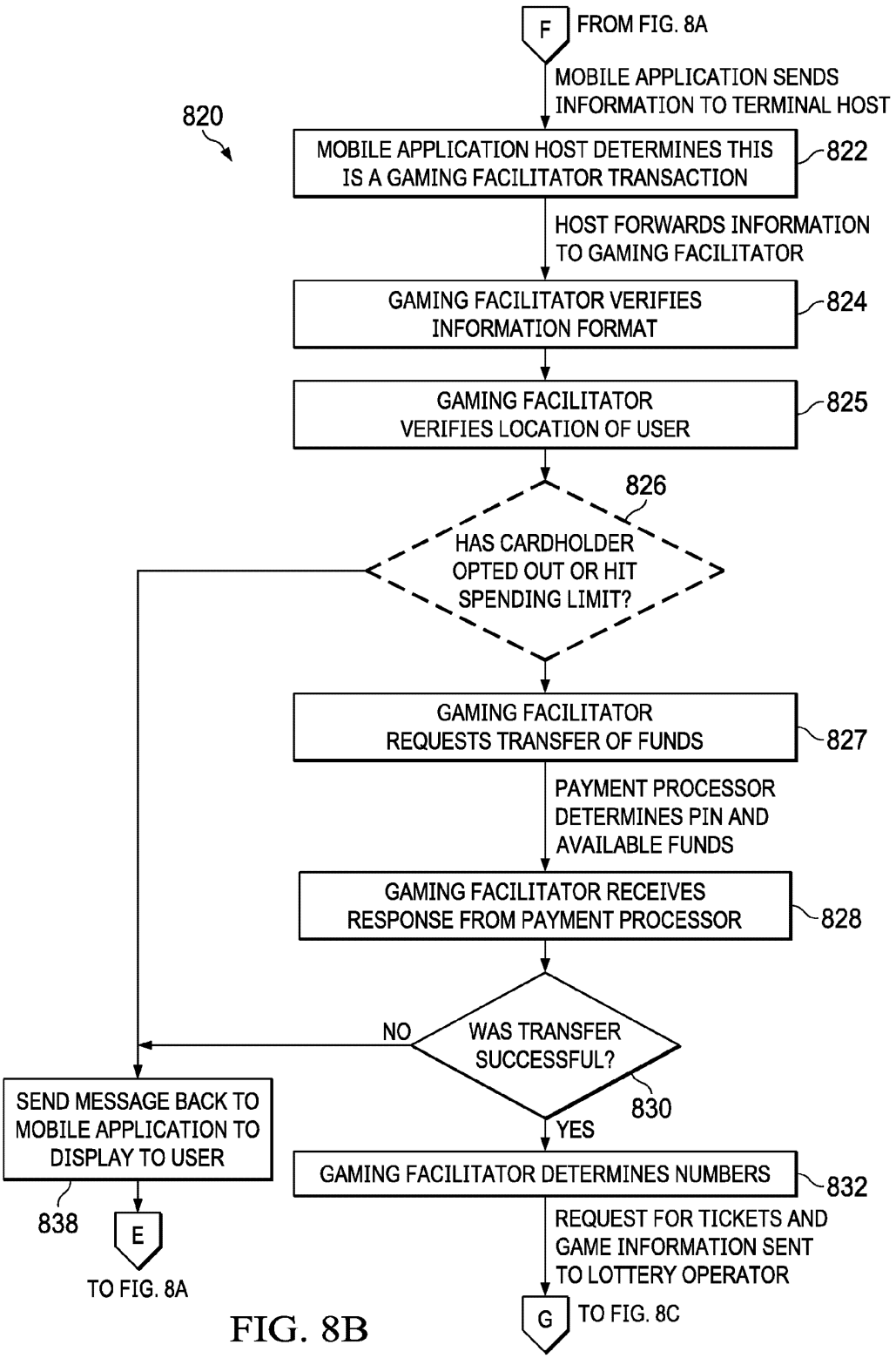
F
FROM FIG. 8A
MOBILE APPLICATION SENDS INFORMATION TO TERMINAL HOST
820
MOBILE APPLICATION HOST DETERMINES THIS IS A GAMING FACILITATOR TRANSACTION
822
HOST FORWARDS INFORMATION TO GAMING FACILITATOR
GAMING FACILITATOR VERIFIES INFORMATION FORMAT
824
GAMING FACILITATOR VERIFIES LOCATION OF USER
825
826
HAS CARDHOLDER OPTED OUT OR HIT SPENDING LIMIT?
GAMING FACILITATOR REQUESTS TRANSFER OF FUNDS
827
PAYMENT PROCESSOR DETERMINES PIN AND AVAILABLE FUNDS
GAMING FACILITATOR RECEIVES RESPONSE FROM PAYMENT PROCESSOR
828
NO
WAS TRANSFER SUCCESSFUL?
830
YES
SEND MESSAGE BACK TO MOBILE APPLICATION TO DISPLAY TO USER
838
E
TO FIG. 8A
GAMING FACILITATOR DETERMINES NUMBERS
832
REQUEST FOR TICKETS AND GAME INFORMATION SENT TO LOTTERY OPERATOR
G
TO FIG. 8C

FIG. 8B

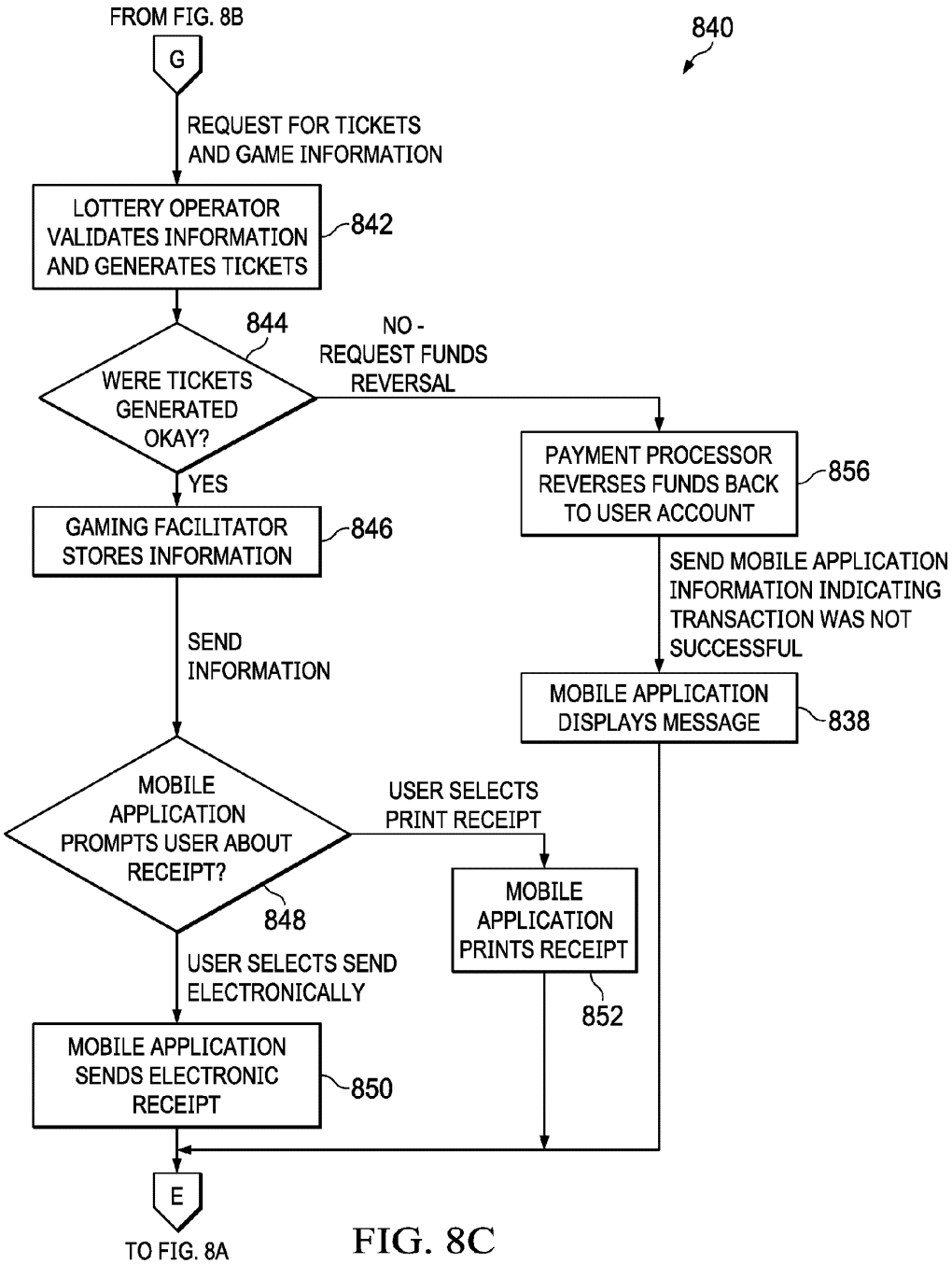
FROM FIG. 8B
G
840
REQUEST FOR TICKETS AND GAME INFORMATION
LOTTERY OPERATOR VALIDATES INFORMATION AND GENERATES TICKETS
842
844
WERE TICKETS GENERATED OKAY?
NO - REQUEST FUNDS REVERSAL
PAYMENT PROCESSOR REVERSES FUNDS BACK TO USER ACCOUNT
856
YES
GAMING FACILITATOR STORES INFORMATION
846
SEND MOBILE APPLICATION INFORMATION INDICATING TRANSACTION WAS NOT SUCCESSFUL
SEND INFORMATION
MOBILE APPLICATION DISPLAYS MESSAGE
838
MOBILE APPLICATION PROMPTS USER ABOUT RECEIPT?
USER SELECTS PRINT RECEIPT
848
MOBILE APPLICATION PRINTS RECEIPT
USER SELECTS SEND ELECTRONICALLY
852
MOBILE APPLICATION SENDS ELECTRONIC RECEIPT
850
E
TO FIG. 8A

FIG. 8C

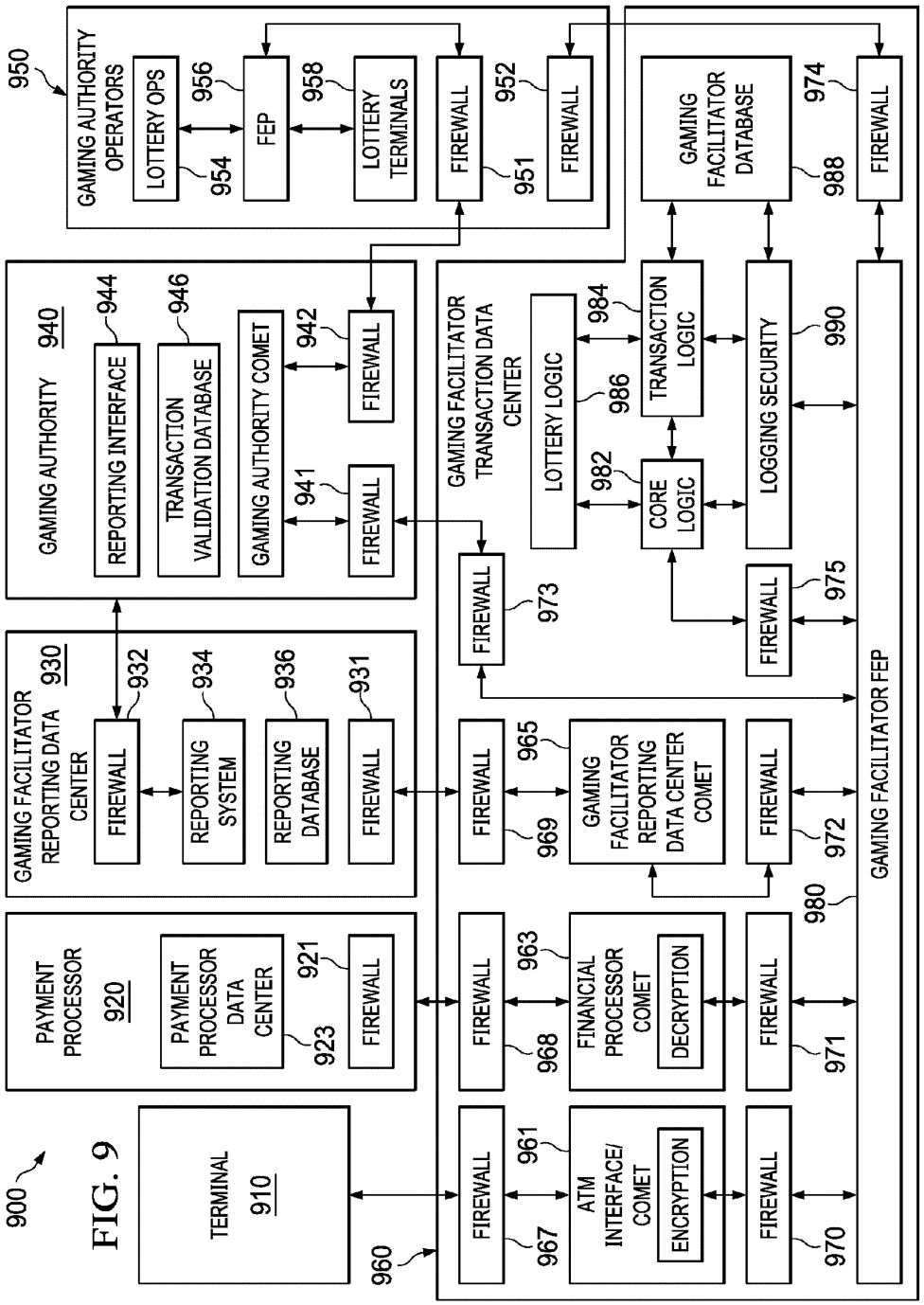
900
950
GAMING AUTHORITY OPERATORS
LOTTERY OPS
954
956
FEP
958
LOTTERY TERMINALS
FIREWALL
951
952
FIREWALL
GAMING FACILITATOR DATABASE
988
974
FIREWALL
GAMING AUTHORITY 940
REPORTING INTERFACE
944
TRANSACTION VALIDATION DATABASE
946
GAMING AUTHORITY COMET
941
942
FIREWALL
FIREWALL
GAMING FACILITATOR TRANSACTION DATA CENTER
LOTTERY LOGIC
982
986
984
TRANSACTION LOGIC
CORE LOGIC
LOGGING SECURITY
990
FIREWALL
973
FIREWALL
975
GAMING FACILITATOR REPORTING DATA CENTER 930
FIREWALL
932
REPORTING SYSTEM
934
REPORTING DATABASE
936
FIREWALL
931
FIREWALL
969
965
GAMING FACILITATOR REPORTING DATA CENTER COMET
FIREWALL
972
GAMING FACILITATOR FEP
980
PAYMENT PROCESSOR 920
PAYMENT PROCESSOR DATA CENTER
923
921
FIREWALL
FIREWALL
968
963
FINANCIAL PROCESSOR COMET
DECRYPTION
FIREWALL
971
TERMINAL 910
960
FIREWALL
967
961
ATM INTERFACE/ COMET
ENCRYPTION
FIREWALL
970

FIG. 9

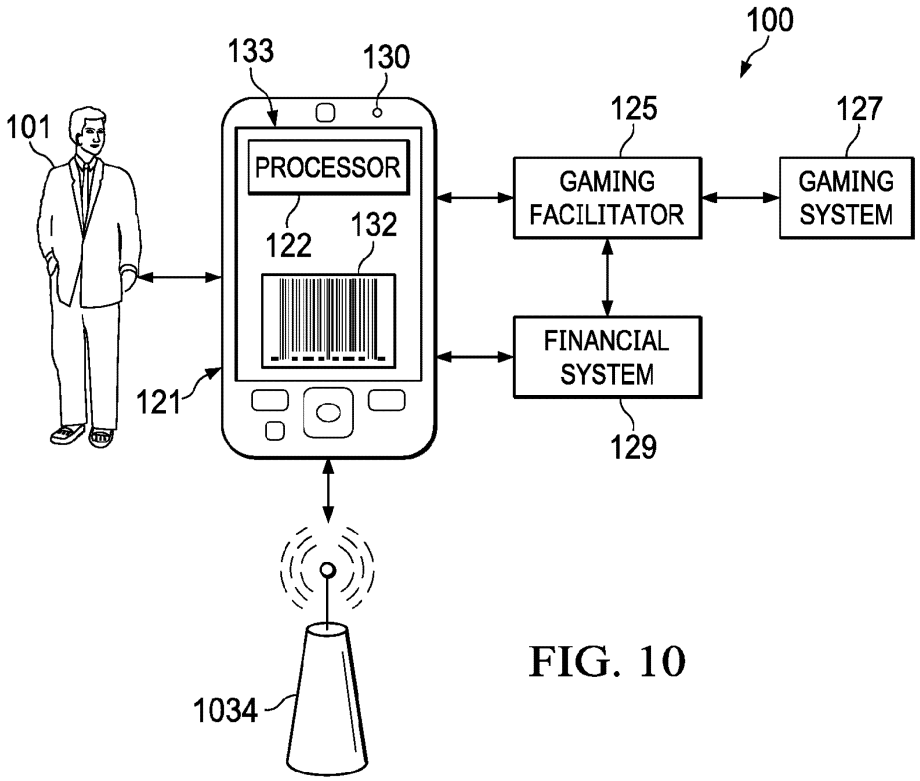
100
133
130
101
PROCESSOR
122
132
121
125
GAMING FACILITATOR
127
GAMING SYSTEM
FINANCIAL SYSTEM
129
1034

FIG. 10

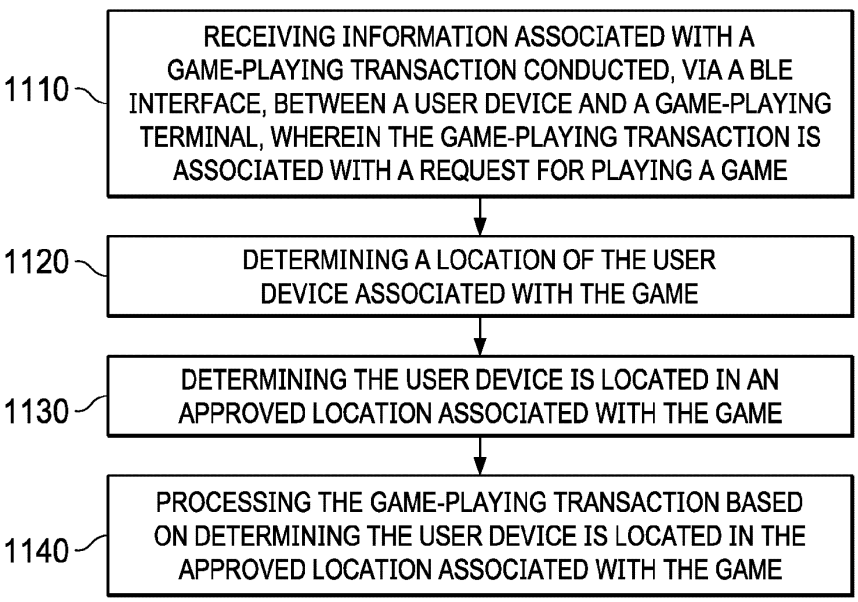
1110
RECEIVING INFORMATION ASSOCIATED WITH A GAME-PLAYING TRANSACTION CONDUCTED, VIA A BLE INTERFACE, BETWEEN A USER DEVICE AND A GAME-PLAYING TERMINAL, WHEREIN THE GAME-PLAYING TRANSACTION IS ASSOCIATED WITH A REQUEST FOR PLAYING A GAME
1120
DETERMINING A LOCATION OF THE USER DEVICE ASSOCIATED WITH THE GAME
1130
DETERMINING THE USER DEVICE IS LOCATED IN AN APPROVED LOCATION ASSOCIATED WITH THE GAME
1140
PROCESSING THE GAME-PLAYING TRANSACTION BASED ON DETERMINING THE USER DEVICE IS LOCATED IN THE APPROVED LOCATION ASSOCIATED WITH THE GAME

FIG. 11

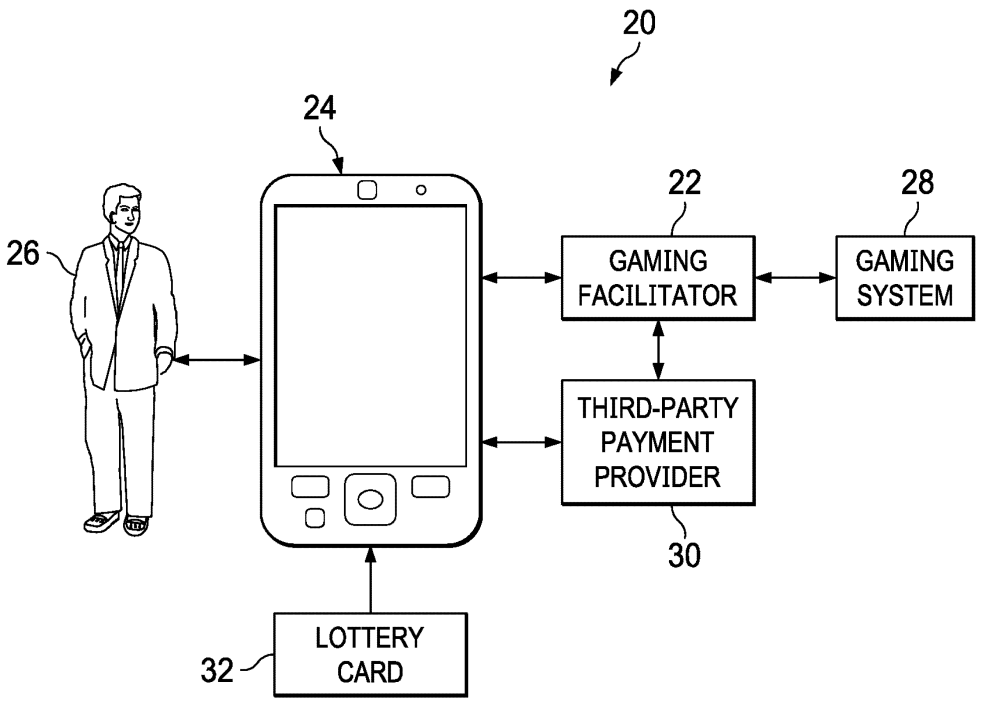
20
24
22
28
26
GAMING FACILITATOR
GAMING SYSTEM
THIRD-PARTY PAYMENT PROVIDER
30
LOTTERY CARD
32

FIG. 12

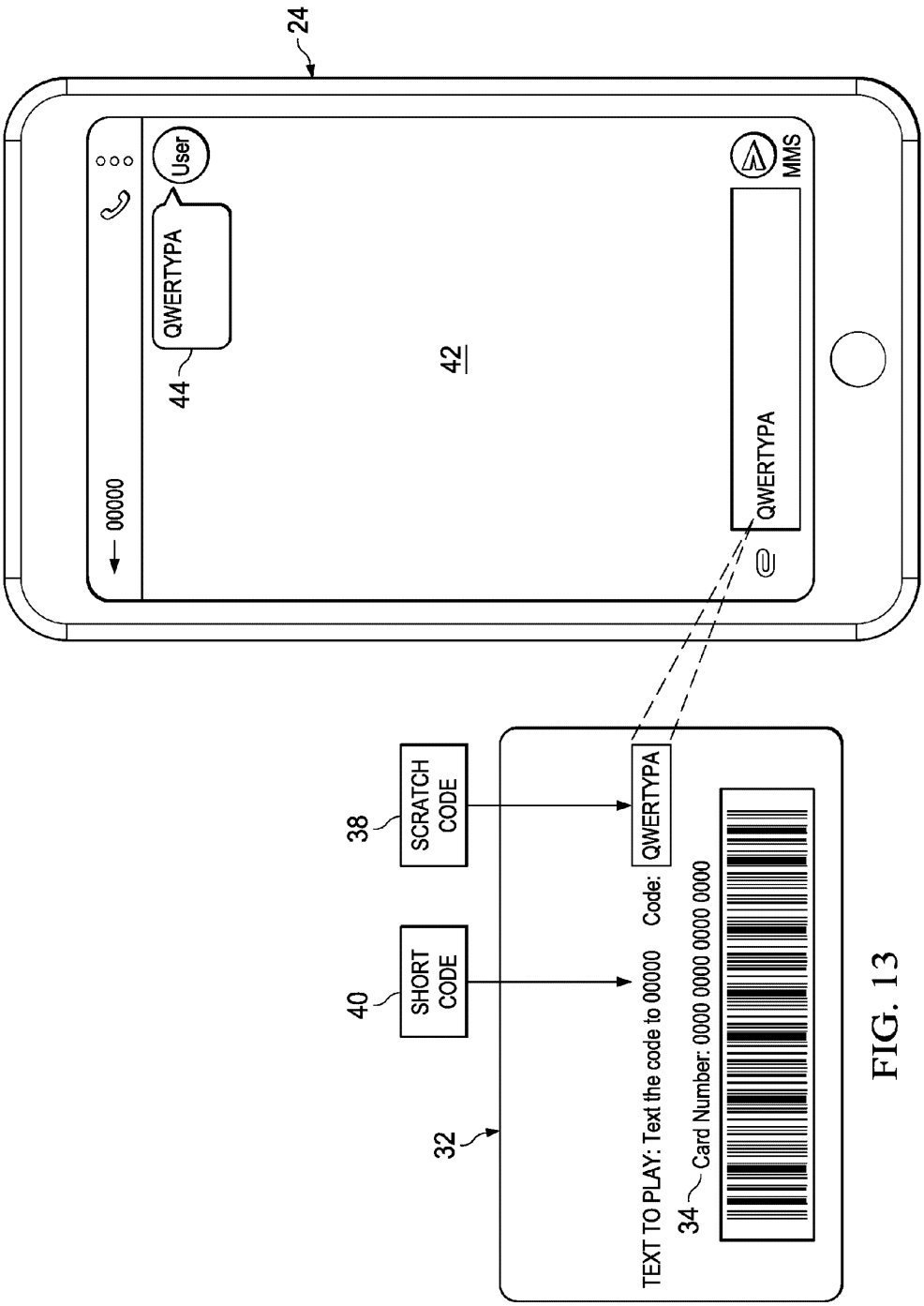
24
00000
User
QWERTYPA
44
42
QWERTYPA
MMS
38
SCRATCH CODE
40
SHORT CODE
32
TEXT TO PLAY: Text the code to 00000
Code:
QWERTYPA
34
Card Number: 0000 0000 0000 0000

FIG. 13

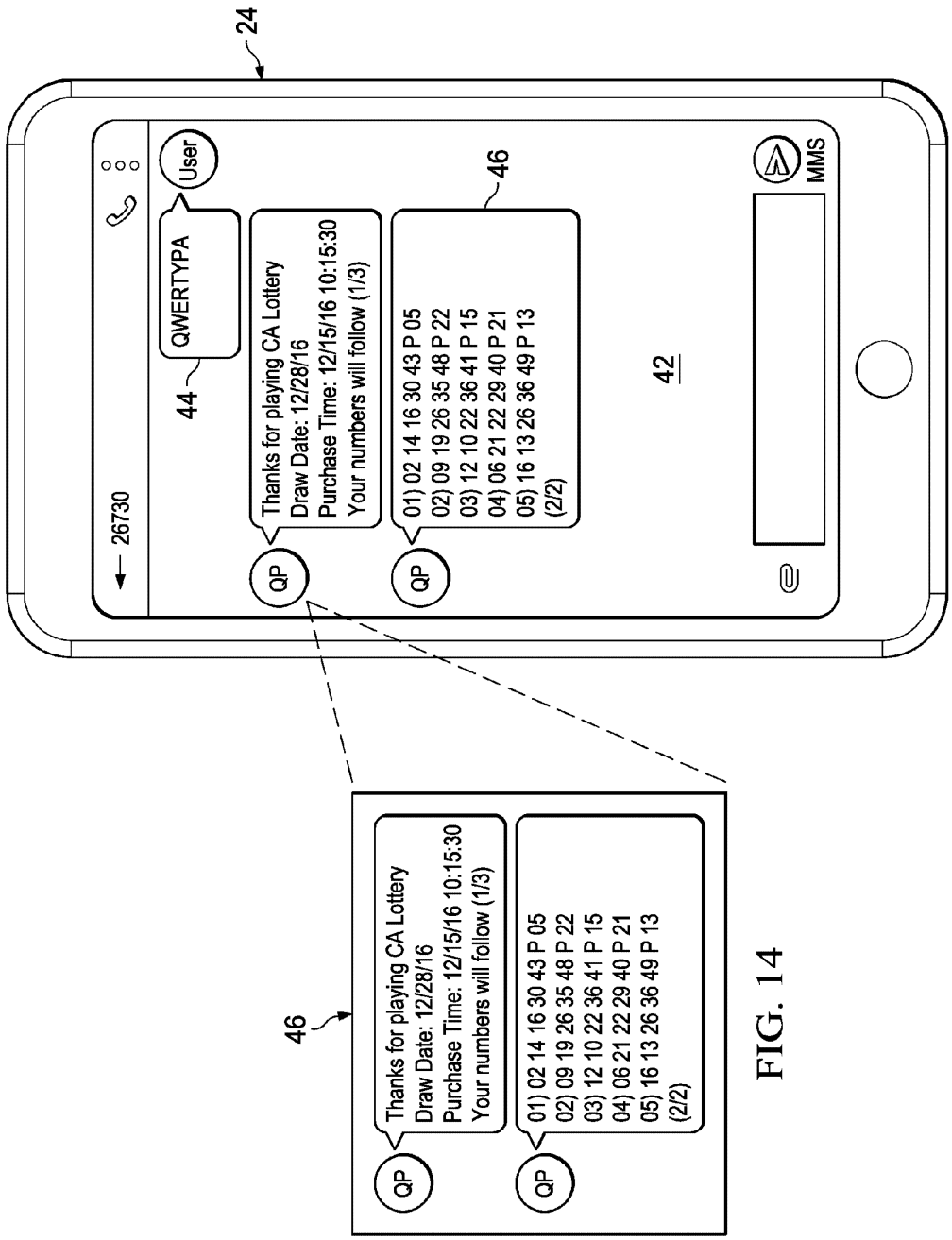
24
26730
User
QWERTYPA
44
QP
Thanks for playing CA Lottery
Draw Date: 12/28/16
Purchase Time: 12/15/16 10:15:30
Your numbers will follow (1/3)
QP
01) 02 14 16 30 43 P 05
02) 09 19 26 35 48 P 22
03) 12 10 22 36 41 P 15
04) 06 21 22 29 40 P 21
05) 16 13 26 36 49 P 13
(2/2)
46
42
MMS
46
QP
Thanks for playing CA Lottery
Draw Date: 12/28/16
Purchase Time: 12/15/16 10:15:30
Your numbers will follow (1/3)
QP
01) 02 14 16 30 43 P 05
02) 09 19 26 35 48 P 22
03) 12 10 22 36 41 P 15
04) 06 21 22 29 40 P 21
05) 16 13 26 36 49 P 13
(2/2)

FIG. 14

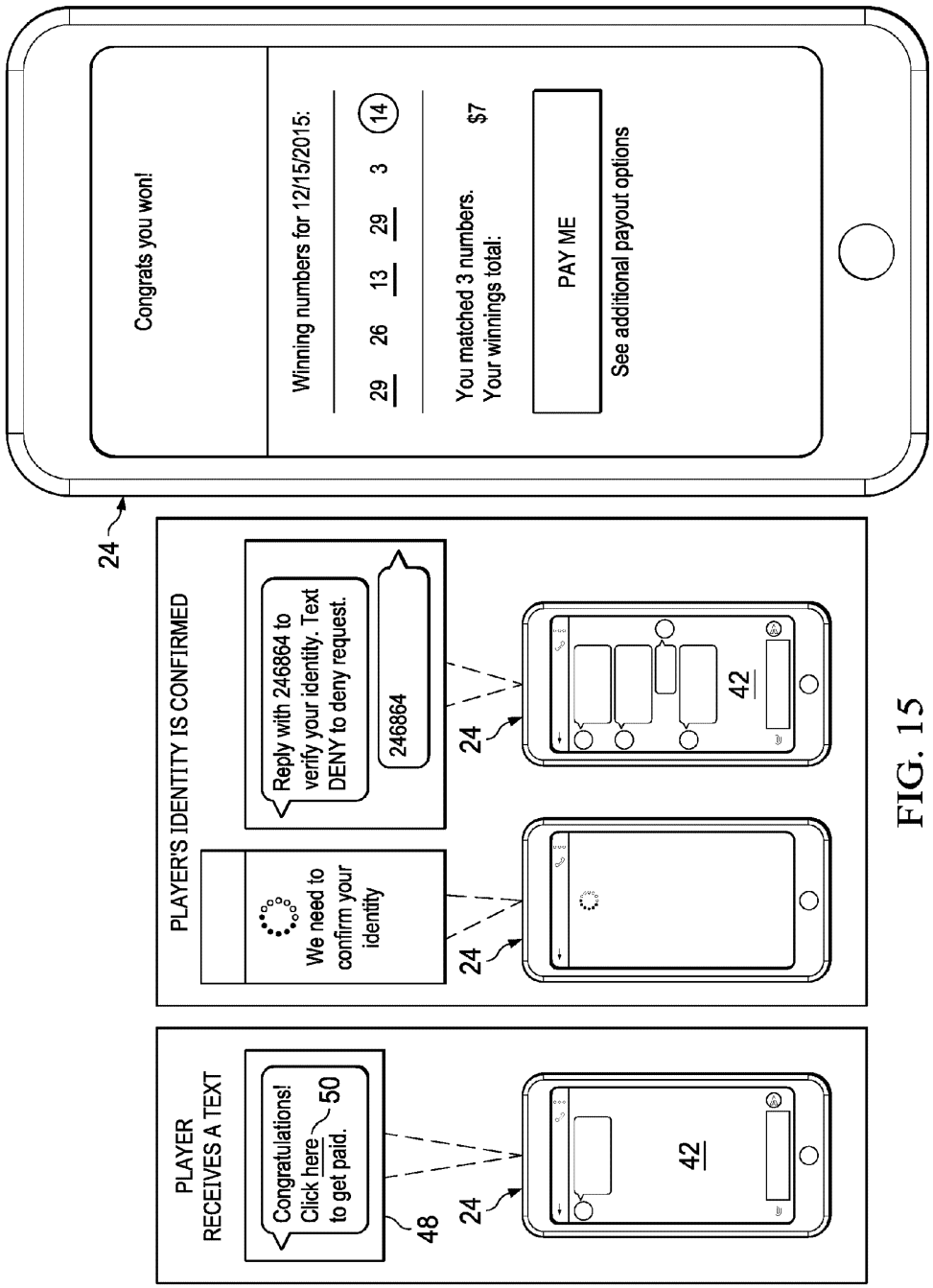
PLAYER RECEIVES A TEXT
Congratulations! Click here to get paid.
50
48
24
42
PLAYER'S IDENTITY IS CONFIRMED
We need to confirm your identity
Reply with 246864 to verify your identity. Text DENY to deny request.
246864
24
42
24
Congrats you won!
Winning numbers for 12/15/2015:
29 26 13 29 3 14
You matched 3 numbers.
Your winnings total:
$7
PAY ME
See additional payout options
24

FIG. 15

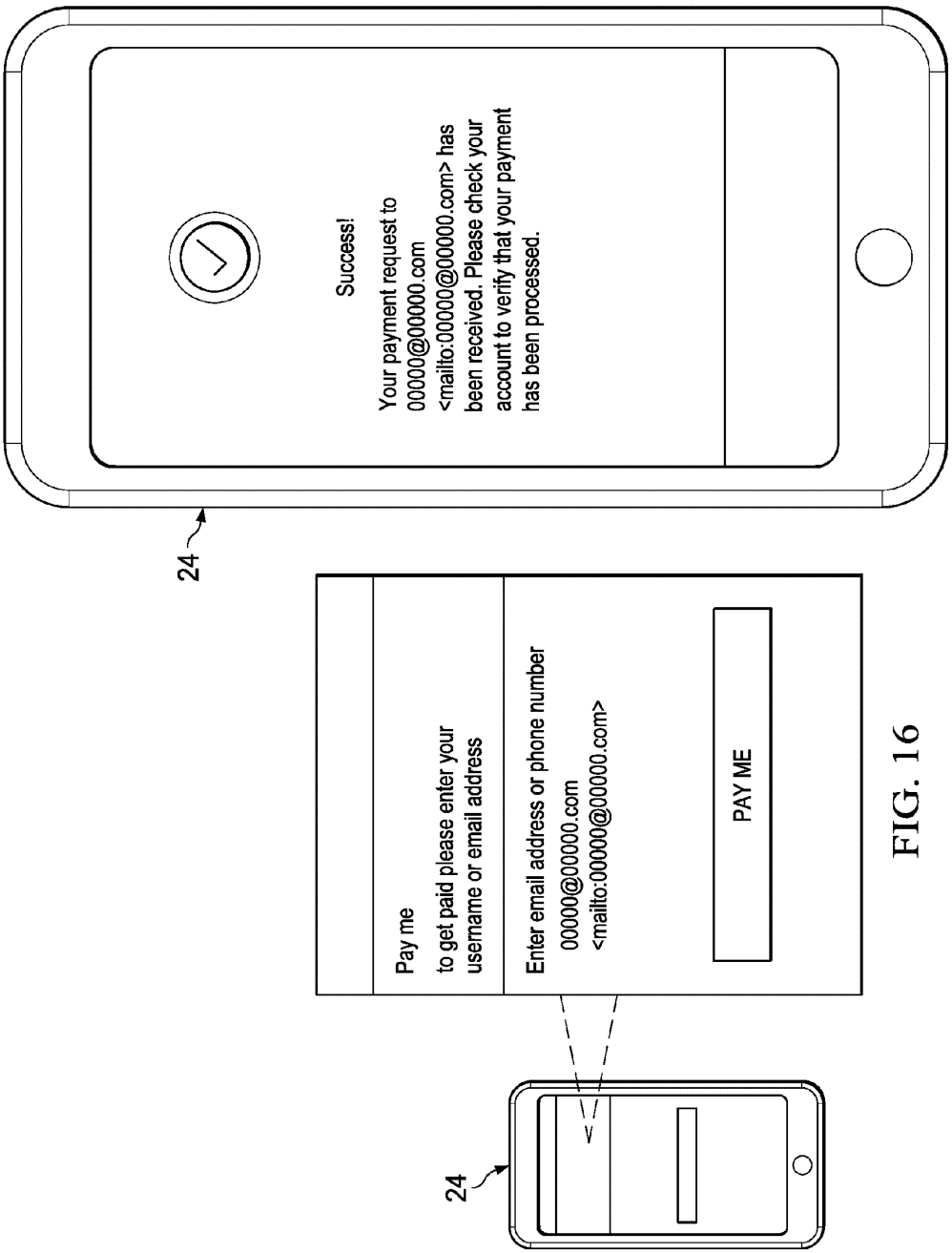
Success!
Your payment request to
00000@00000.com
<mailto:00000@00000.com> has
been received. Please check your
account to verify that your payment
has been processed.
24
Pay me
to get paid please enter your
username or email address
Enter email address or phone number
00000@00000.com
<mailto:00000@00000.com>
PAY ME
24

FIG. 16

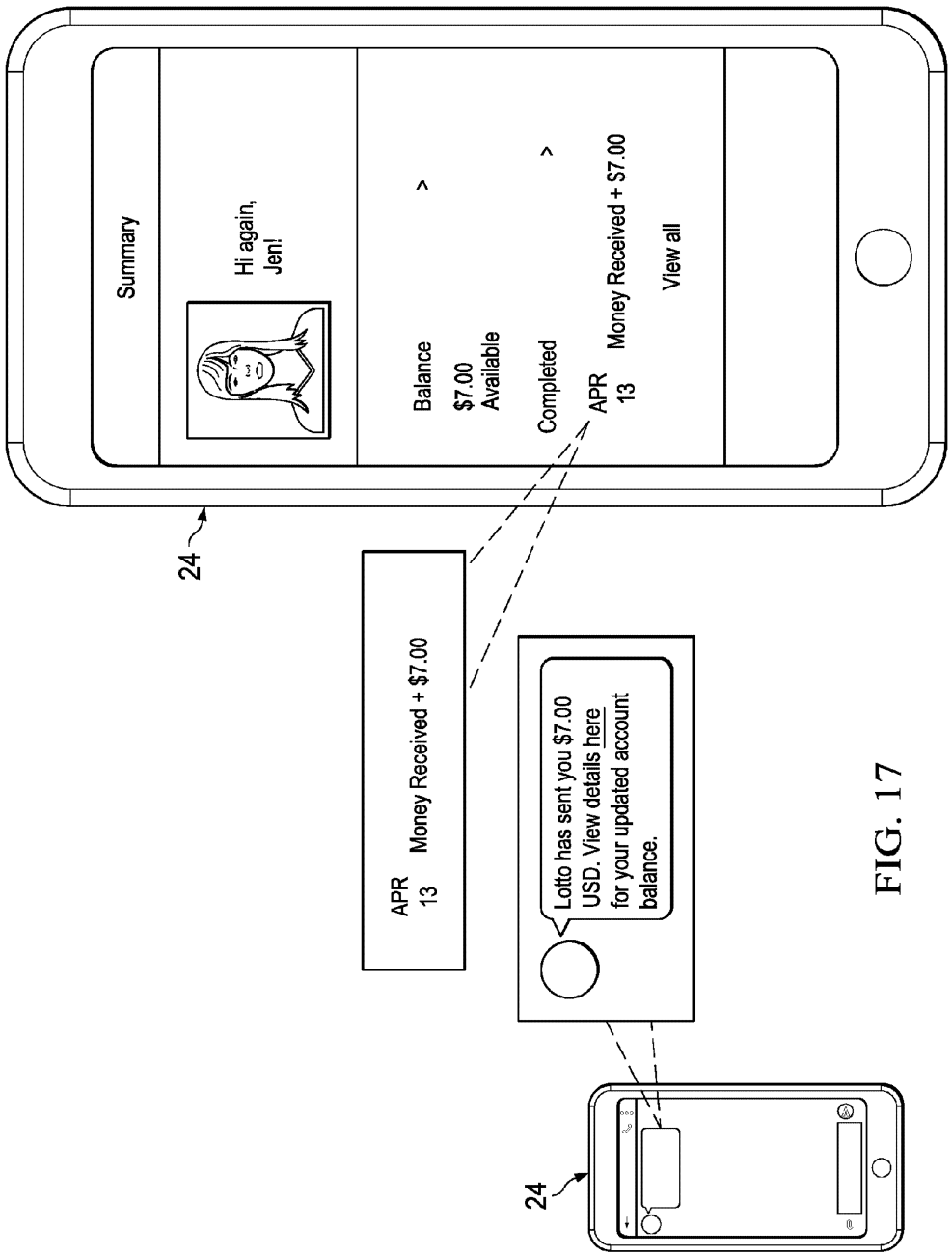
Summary
Hi again, Jen!
Balance
$7.00 Available
Completed
APR 13
Money Received + $7.00
View all
24
APR 13
Money Received + $7.00
Lotto has sent you $7.00 USD. View details here for your updated account balance.
24

FIG. 17

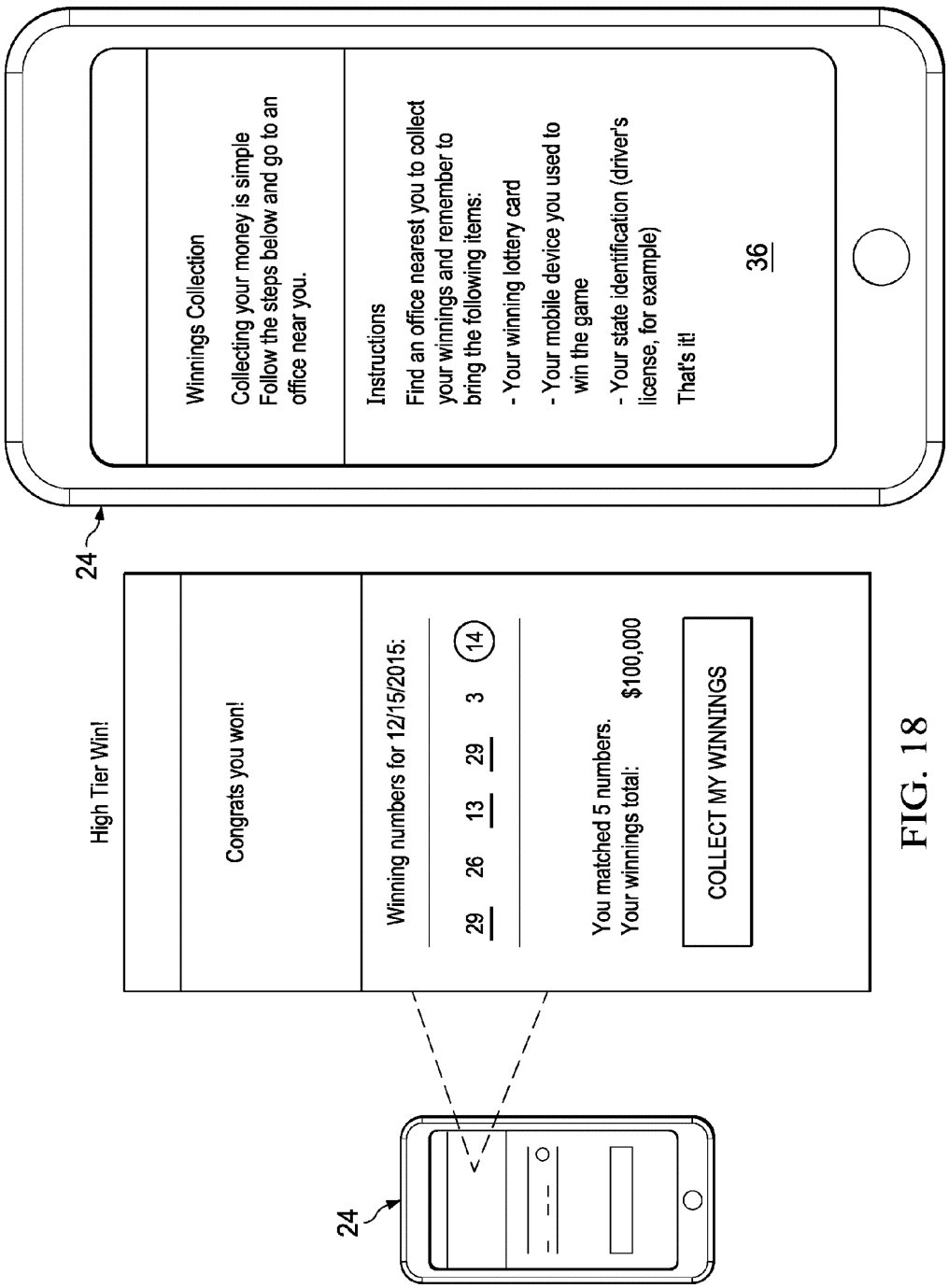
Winnings Collection
Collecting your money is simple
Follow the steps below and go to an office near you.
Instructions
Find an office nearest you to collect your winnings and remember to bring the following items:
- Your winning lottery card
- Your mobile device you used to win the game
- Your state identification (driver's license, for example)
That's it!
36
24
High Tier Win!
Congrats you won!
Winning numbers for 12/15/2015:
29 26 13 29 3 14
You matched 5 numbers.
Your winnings total: $100,000
COLLECT MY WINNINGS
24

FIG. 18

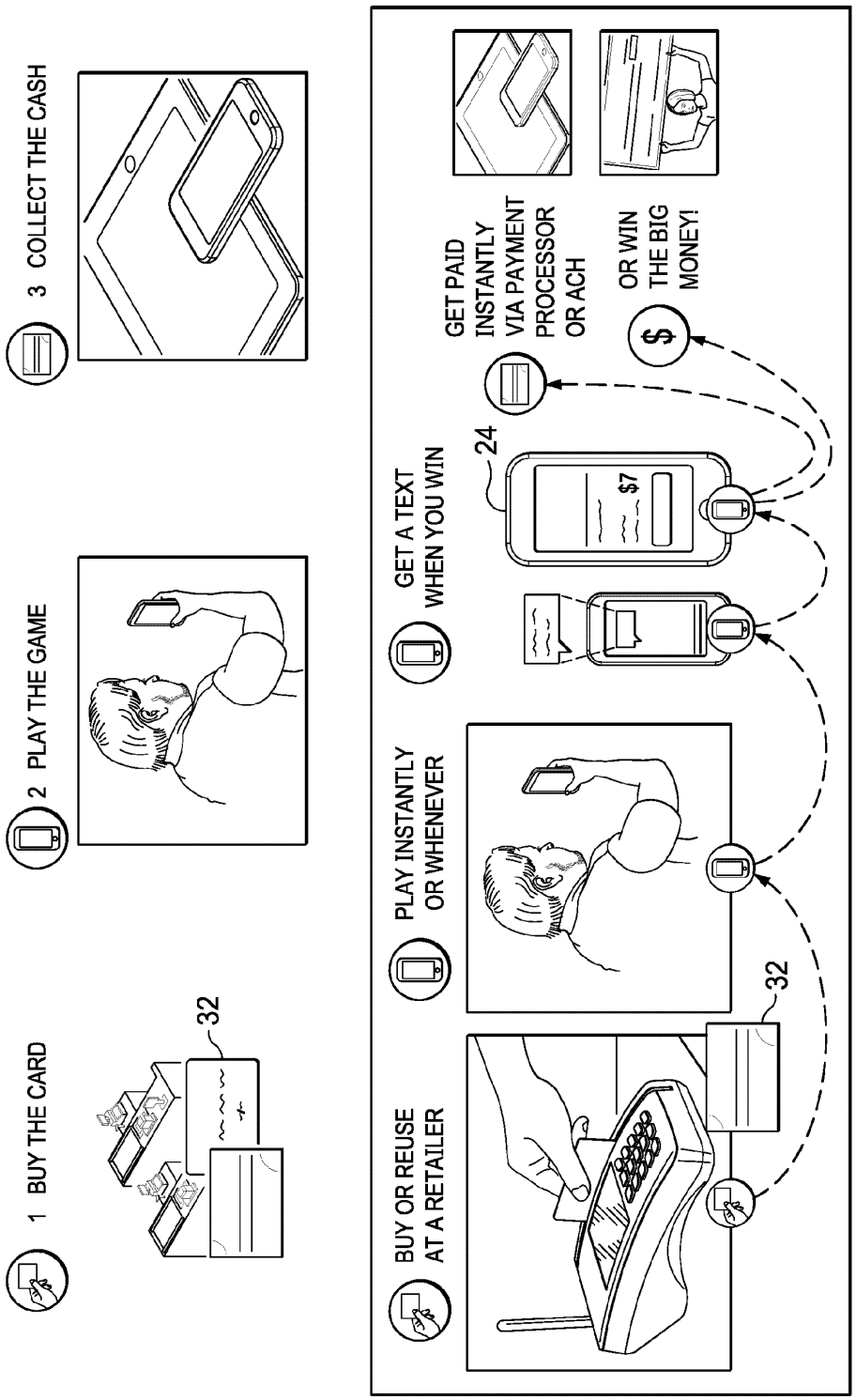
1 BUY THE CARD
32
2 PLAY THE GAME
3 COLLECT THE CASH
BUY OR REUSE AT A RETAILER
32
PLAY INSTANTLY OR WHENEVER
GET A TEXT WHEN YOU WIN
24
$7
GET PAID INSTANTLY VIA PAYMENT PROCESSOR OR ACH
OR WIN THE BIG MONEY!
$

FIG. 19

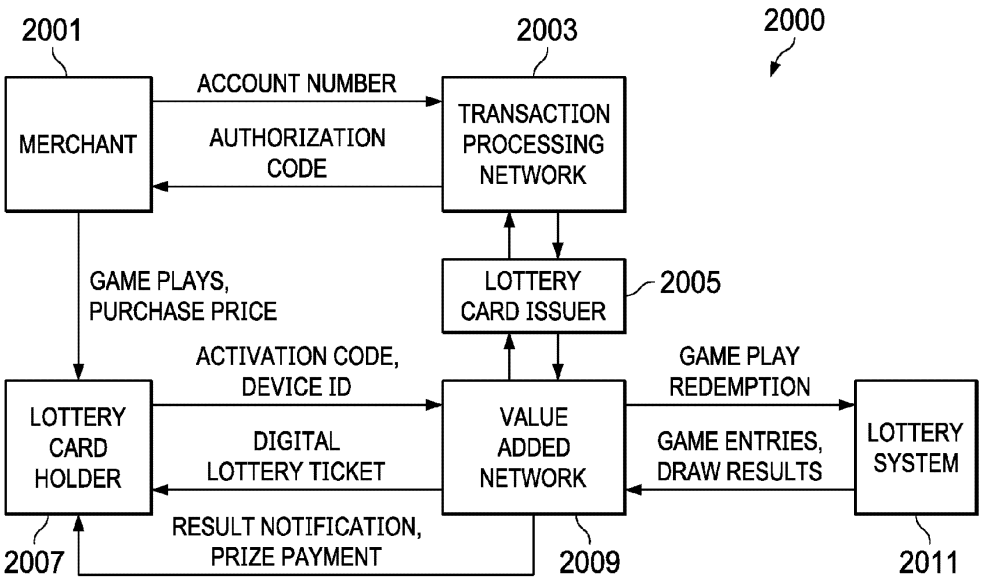
2000
2001
2003
MERCHANT
ACCOUNT NUMBER
AUTHORIZATION CODE
TRANSACTION PROCESSING NETWORK
GAME PLAYS, PURCHASE PRICE
LOTTERY CARD ISSUER
2005
ACTIVATION CODE, DEVICE ID
GAME PLAY REDEMPTION
LOTTERY CARD HOLDER
DIGITAL LOTTERY TICKET
VALUE ADDED NETWORK
GAME ENTRIES, DRAW RESULTS
LOTTERY SYSTEM
RESULT NOTIFICATION, PRIZE PAYMENT
2007
2009
2011

FIG. 20

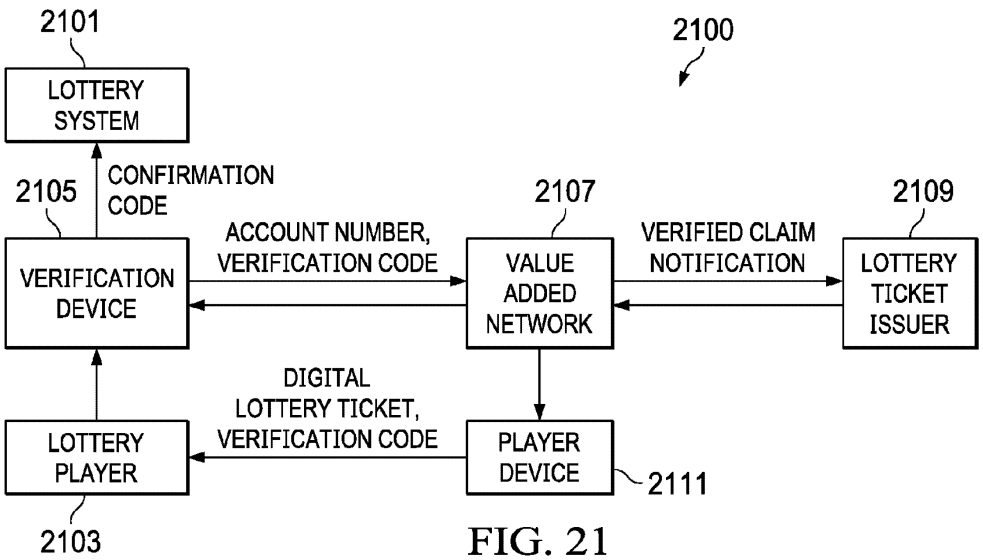
2101
2100
LOTTERY SYSTEM
CONFIRMATION CODE
2105
2107
2109
ACCOUNT NUMBER, VERIFICATION CODE
VERIFIED CLAIM NOTIFICATION
VERIFICATION DEVICE
VALUE ADDED NETWORK
LOTTERY TICKET ISSUER
DIGITAL LOTTERY TICKET, VERIFICATION CODE
LOTTERY PLAYER
PLAYER DEVICE
2111
2103

FIG. 21

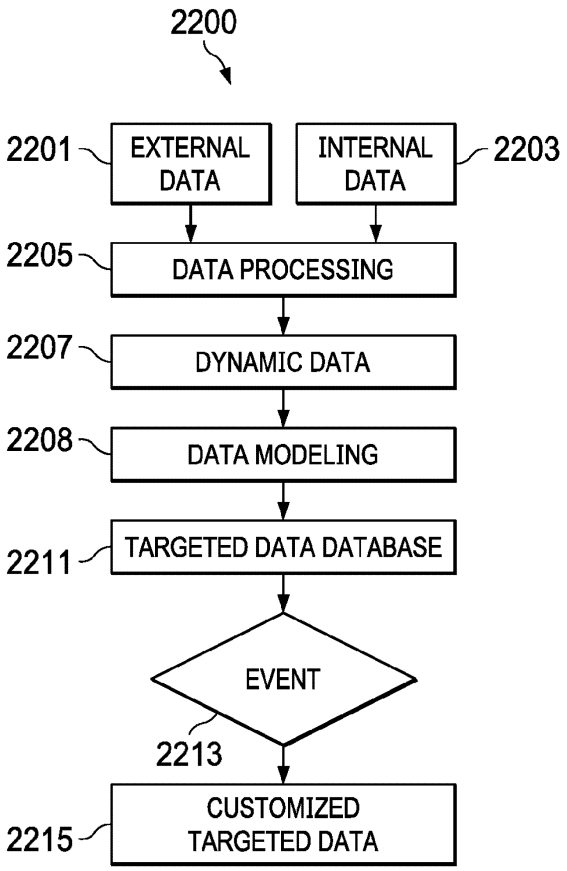
2200
2201
EXTERNAL DATA
INTERNAL DATA
2203
2205
DATA PROCESSING
2207
DYNAMIC DATA
2208
DATA MODELING
2211
TARGETED DATA DATABASE
EVENT
2213
2215
CUSTOMIZED TARGETED DATA

FIG. 22

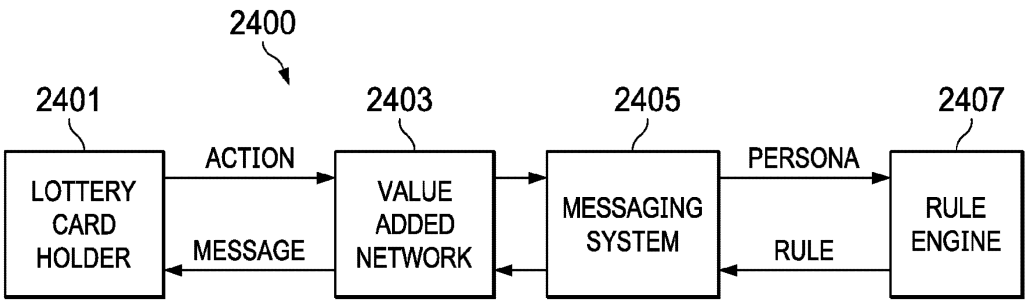
2400
2401
2403
2405
2407
LOTTERY CARD HOLDER
ACTION
MESSAGE
VALUE ADDED NETWORK
MESSAGING SYSTEM
PERSONA
RULE
RULE ENGINE

FIG. 24

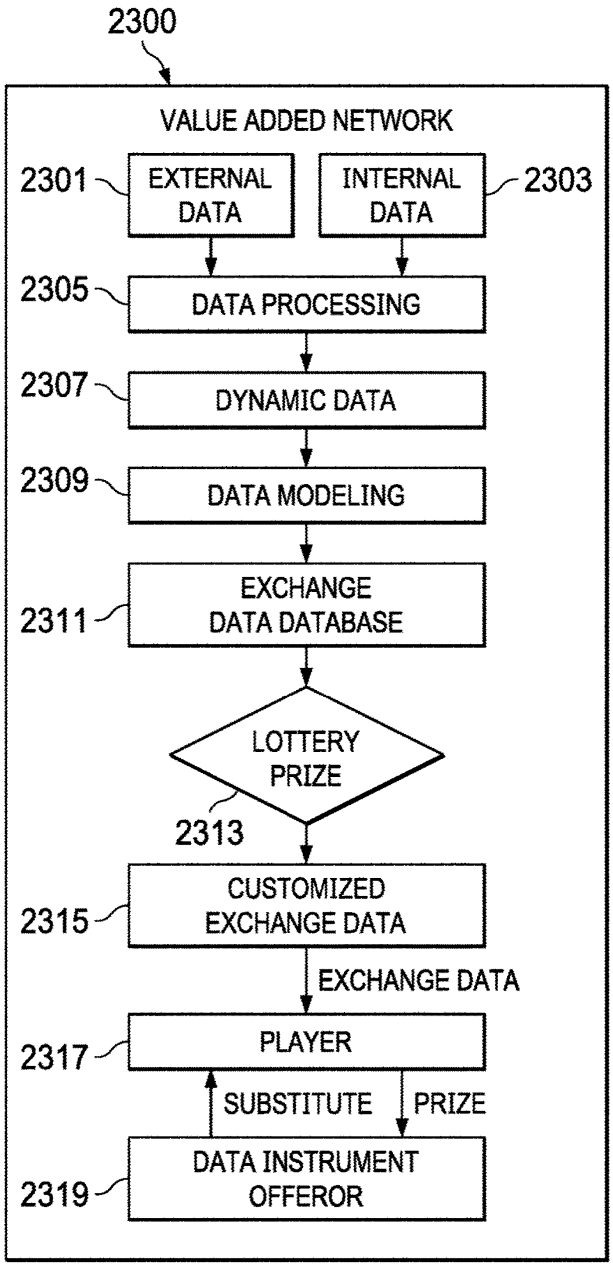
2300
VALUE ADDED NETWORK
2301
EXTERNAL DATA
INTERNAL DATA
2303
2305
DATA PROCESSING
2307
DYNAMIC DATA
2309
DATA MODELING
2311
EXCHANGE DATA DATABASE
LOTTERY PRIZE
2313
2315
CUSTOMIZED EXCHANGE DATA
EXCHANGE DATA
2317
PLAYER
SUBSTITUTE
PRIZE
2319
DATA INSTRUMENT OFFEROR

FIG. 23

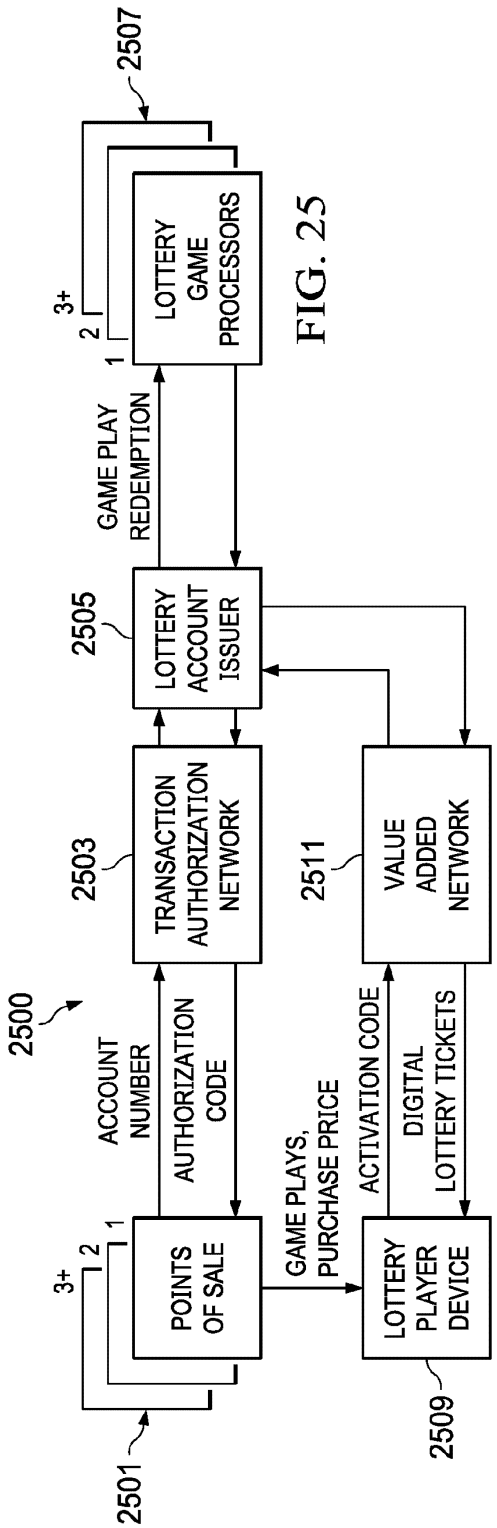
2500
2501
POINTS OF SALE
3+
2
1
ACCOUNT NUMBER
AUTHORIZATION CODE
2503
TRANSACTION AUTHORIZATION NETWORK
2505
LOTTERY ACCOUNT ISSUER
GAME PLAY REDEMPTION
2507
LOTTERY GAME PROCESSORS
GAME PLAYS, PURCHASE PRICE
2509
LOTTERY PLAYER DEVICE
ACTIVATION CODE
DIGITAL LOTTERY TICKETS
2511
VALUE ADDED NETWORK

FIG. 25

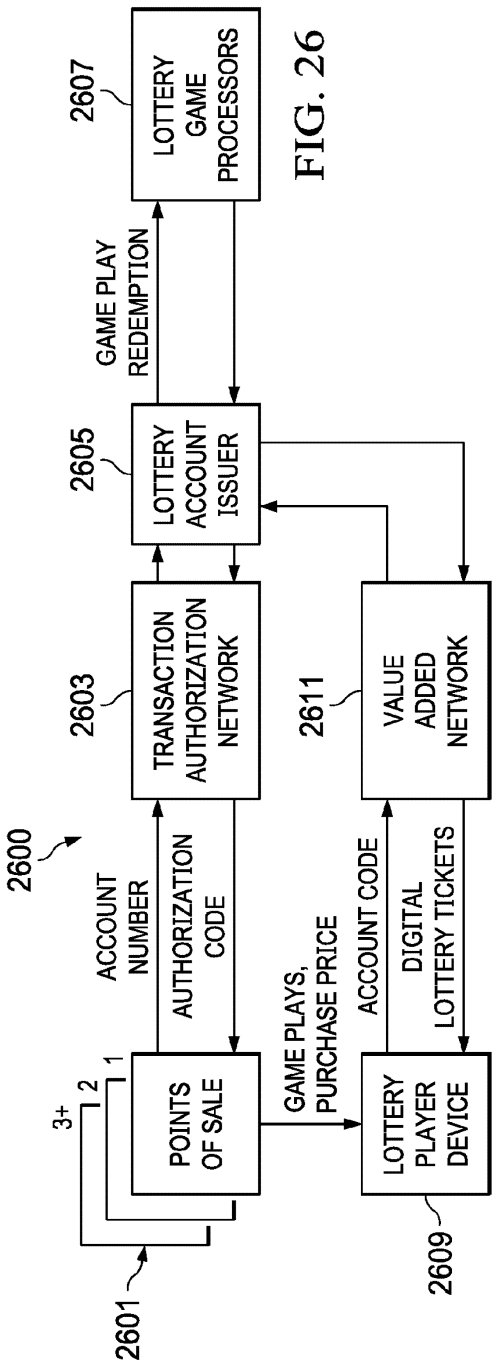
2600
2601
POINTS OF SALE
3+
2
1
ACCOUNT NUMBER
AUTHORIZATION CODE
2603
TRANSACTION AUTHORIZATION NETWORK
2605
LOTTERY ACCOUNT ISSUER
GAME PLAY REDEMPTION
2607
LOTTERY GAME PROCESSORS
GAME PLAYS, PURCHASE PRICE
2609
LOTTERY PLAYER DEVICE
ACCOUNT CODE
DIGITAL LOTTERY TICKETS
2611
VALUE ADDED NETWORK

FIG. 26

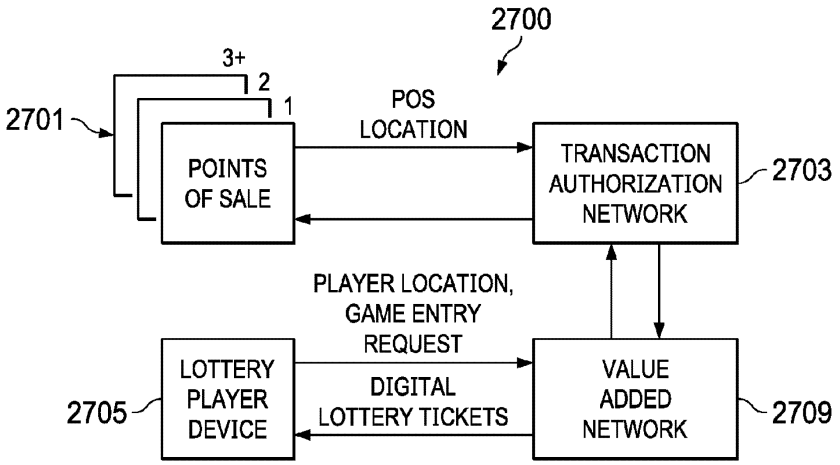
2700
3+
2
1
2701
POS
LOCATION
POINTS
OF SALE
TRANSACTION
AUTHORIZATION
NETWORK
2703
PLAYER LOCATION,
GAME ENTRY
REQUEST
LOTTERY
PLAYER
DEVICE
DIGITAL
LOTTERY TICKETS
VALUE
ADDED
NETWORK
2705
2709

FIG. 27

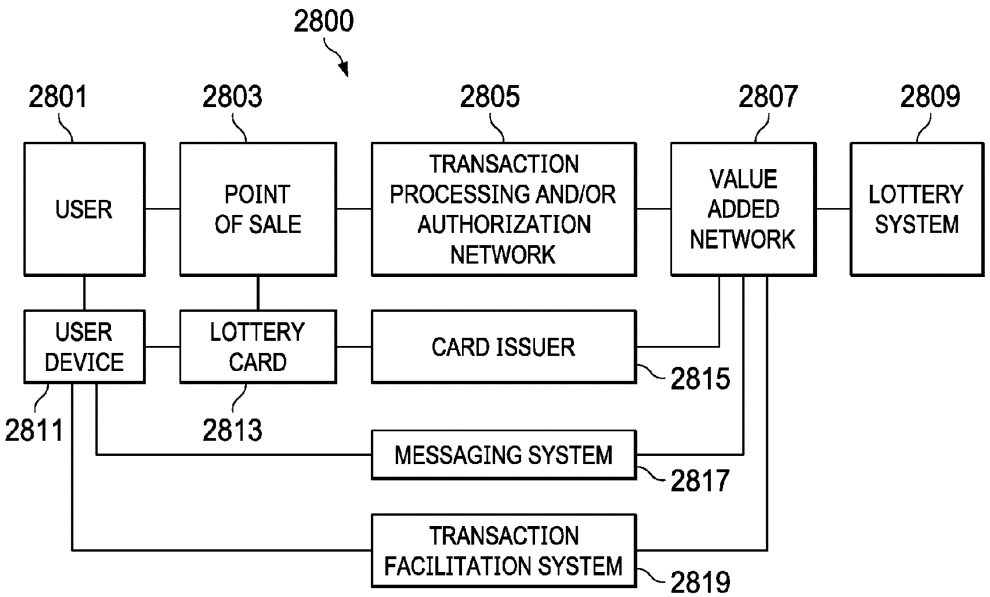
2800
2801
2803
2805
2807
2809
USER
POINT
OF SALE
TRANSACTION
PROCESSING AND/OR
AUTHORIZATION
NETWORK
VALUE
ADDED
NETWORK
LOTTERY
SYSTEM
USER
DEVICE
LOTTERY
CARD
CARD ISSUER
2815
2811
2813
MESSAGING SYSTEM
2817
TRANSACTION
FACILITATION SYSTEM
2819

FIG. 28

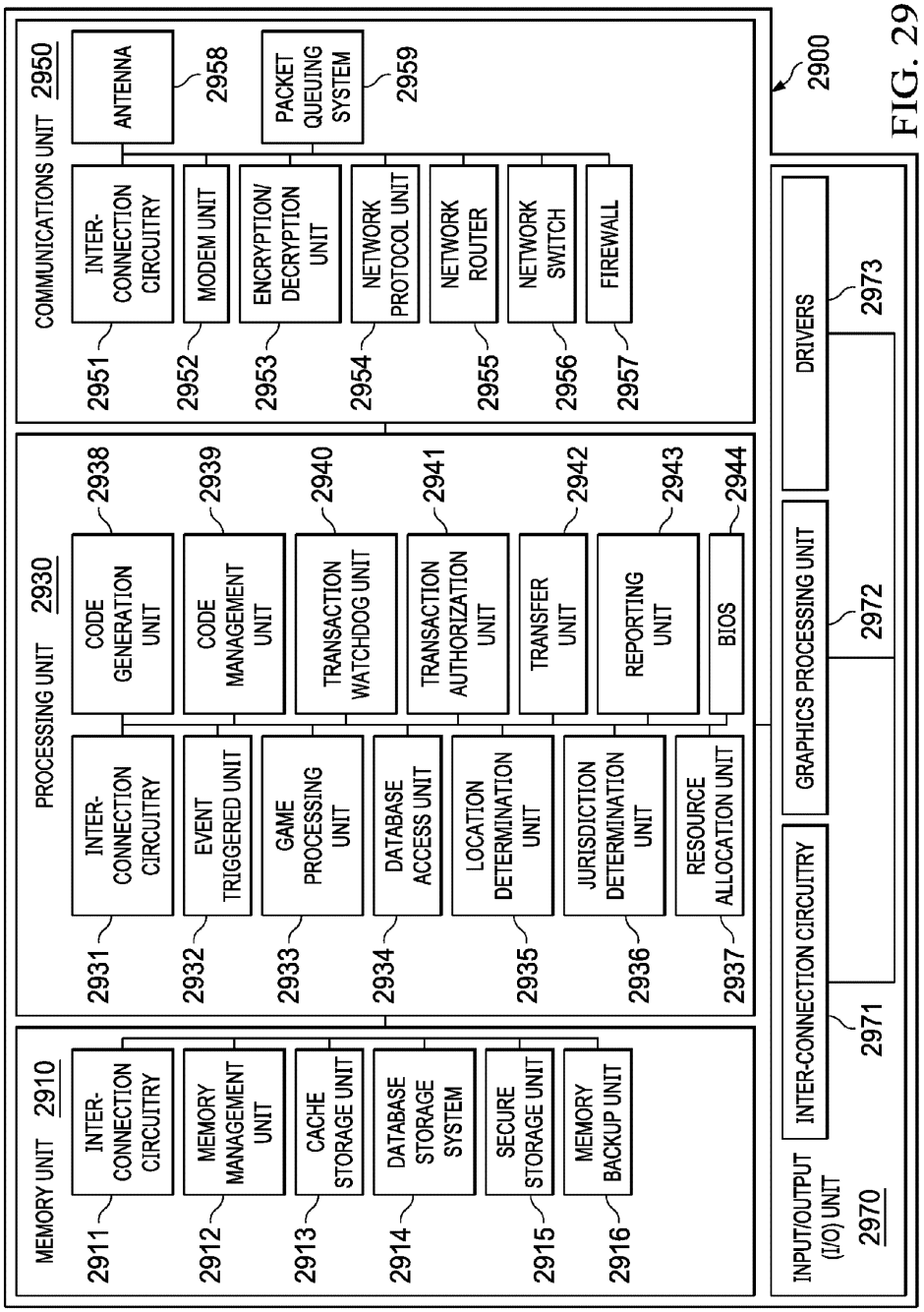
COMMUNICATIONS UNIT 2950
ANTENNA
2958
PACKET QUEUING SYSTEM
2959
INTER-CONNECTION CIRCUITRY
MODEM UNIT
ENCRYPTION/ DECRYPTION UNIT
NETWORK PROTOCOL UNIT
NETWORK ROUTER
NETWORK SWITCH
FIREWALL
2951
2952
2953
2954
2955
2956
2957
PROCESSING UNIT 2930
CODE GENERATION UNIT
CODE MANAGEMENT UNIT
TRANSACTION WATCHDOG UNIT
TRANSACTION AUTHORIZATION UNIT
TRANSFER UNIT
REPORTING UNIT
BIOS
2938
2939
2940
2941
2942
2943
2944
INTER-CONNECTION CIRCUITRY
EVENT TRIGGERED UNIT
GAME PROCESSING UNIT
DATABASE ACCESS UNIT
LOCATION DETERMINATION UNIT
JURISDICTION DETERMINATION UNIT
RESOURCE ALLOCATION UNIT
2931
2932
2933
2934
2935
2936
2937
MEMORY UNIT 2910
INTER-CONNECTION CIRCUITRY
MEMORY MANAGEMENT UNIT
CACHE STORAGE UNIT
DATABASE STORAGE SYSTEM
SECURE STORAGE UNIT
MEMORY BACKUP UNIT
2911
2912
2913
2914
2915
2916
INPUT/OUTPUT (I/O) UNIT 2970
INTER-CONNECTION CIRCUITRY
GRAPHICS PROCESSING UNIT
DRIVERS
2971
2972
2973
2900

FIG. 29

PROCESSING OF A USER DEVICE GAME-PLAYING TRANSACTION BASED ON LOCATION

CROSS-REFERENCE TO RELATED APPLICATIONS

This application is a continuation-in-part of, and claims priority to U.S. application Ser. No. 15/614,490, filed Jun. 05, 2017, issued as U.S. Pat. No. 9,824,340 on Nov. 21, 2017, which is a continuation-in-part of, and claims priority to, U.S. patent application Ser. No. 14/958,720 filed on Dec. 3, 2015, issued as U.S. Pat. No. 9,672,697 on Jun. 6, 2017, which is a continuation-in-part of, and claims priority to, U.S. patent application Ser. No. 14/018,276 filed on Sep. 4, 2013, issued as U.S. Pat. No. 9,227,136 on Jan. 5, 2016, which claims priority to U.S. Provisional Patent Application No. 61/696,533 filed on Sep. 4, 2012, all the disclosures of which are hereby incorporated by reference in their entirety for all purposes. U.S. application Ser. No. 15/614,490, filed Jun. 5, 2017, issued as U.S. Pat. No. 9,824,340 on Nov. 21, 2017, is also a continuation-in-part of, and claims priority to, U.S. patent application Ser. No. 14/856,421, filed Sep. 16, 2015, the disclosure of which is hereby incorporated by reference in its entirety for all purposes. The present application is also a non-provisional of and claims benefit of U.S. Provisional Application No. 62/458,457, filed on Feb. 13, 2017, the disclosure of which is incorporated by reference in its entirety for all purposes.

TECHNICAL FIELD

This disclosure generally relates to game play systems.

BACKGROUND

Many governments have passed laws permitting lottery games to be legalized within their borders. These laws are due to the public support for this style of entertainment. Currently, these games are presented through specific manned terminals that connect to lottery operators—corporations responsible for running the lottery games. While these games have proven to be popular, a large segment of the population does not participate. This is due to many factors including a lack of desire to interact with personnel running the game kiosks, the inconvenience of the manned terminals, the concern over losing a ticket, and, more recently, the lack of cash to play the games as many people are only using payment cards for purchases.

In addition, due to regulatory restrictions, the sale of lottery products is restricted to be within the borders of the government regulating the lottery games. Therefore, existing sales solutions used on mobile devices such as handheld devices and smart phones are not appropriate for the sale of the lottery games because they lack assurances that the mobile device is located within the borders of the government regulating the lottery game.

SUMMARY

In some embodiments, a device is provided for approving game-playing transactions. The device comprises a first communication interface, the first communication interface comprising a Bluetooth interface such as a Bluetooth Low Energy (BLE) interface; a second communication interface; and a processor configured to: receive a first request from a user of the device, the first request being associated with a game; conduct, over the first communication interface, a first transaction, the first transaction comprising reception of first information over the first communication interface, and send, over the second communication interface, a second request associated with the game. The first request or the second request is approved based on: determining a location associated with conducting the first transaction or sending the second request, and determining the location is an approved location associated with the game.

In some embodiments, the device is further configured to prompt a user of the device to play the game in response to determining the device is with a threshold distance of a beacon with which the first transaction is conducted. In some embodiments, the beacon may be a Bluetooth interface such as BLE terminal.

In some embodiments, the second communication interface comprises a Wi-Fi or cellular interface.

In some embodiments, the device is comprised in or part of a motor vehicle.

In some embodiments, the second request comprises at least one of a purchase request, the first request, or the first information.

In some embodiments, the location is determined based on global positioning system (GPS) coordinates of the device.

In some embodiments, the device comprises a mobile device or a non-mobile device.

In some embodiments, the second request is approved further based on determining a period of validity associated with the first information has not expired.

In some embodiments, the second request is approved further based on: determining a gaming authority associated with the game; and determining the user is located in an approved jurisdiction associated with the gaming authority for the game.

In some embodiments, the location is determined based on input received at the device.

In some embodiments, the second communication interface is associated with longer range communication compared to the first communication interface.

In some embodiments, the location is determined by at least one of the device or by a second device that receives the second request from the device.

In some embodiments, a method is provided for processing game-playing transactions. The method comprises receiving information associated with a game-playing transaction conducted, via a Bluetooth interface such as a BLE interface, between a user device and a game-playing terminal, wherein the game-playing transaction is associated with a request for playing a game; determining a location of the user device associated with the game; determining the user device is located in an approved location associated with the game; and processing the game-playing transaction based on determining the user device is located in the approved location associated with the game. The game-playing transaction is conducted on a first communication interface, and the information associated with the game-playing transaction is received on a second communication interface.

In some embodiments, the user device comprises a game-playing application.

In some embodiments, the game comprises a lottery game.

In some embodiments, the method further comprises determining a period of validity associated with the information has not expired, and processing the game-playing request based on determining the period of validity associated with the information has not expired.

In some embodiments, the method further comprises processing the game-playing transaction based on: determining a merchant associated with the location of the user device or the game-playing terminal; cross-referencing a list of approved merchants associated with the location of the user device or the game-playing terminal; and determining the merchant is present on the list of approved merchants.

In some embodiments, the game-playing terminal comprises either an electronic game-playing terminal or a non-electronic game playing terminal.

In some embodiments, another device is provided for processing game-playing transactions. The device is configured to receive information associated with a game-playing transaction conducted, via a Bluetooth interface such as a BLE interface, between a user device and a game-playing terminal, wherein the game-playing transaction is associated with a request for playing a game using the user device; and process the game-playing transaction based on determining the user device is located in an approved location associated with the game, wherein the location of the user device is determined either by the device or the user device. The game-playing transaction is conducted on a first communication interface, and the information is received on a second communication interface.

In some embodiments, the second communication interface is associated with longer-range communication compared to the first communication interface.

In some embodiments, the game-playing transaction comprises a game-requesting transaction or a game-purchasing transaction.

In some embodiments, a non-transitory computer readable medium may be encoded thereon with a program or code that when executed by a processor (e.g., a general or special purpose processor) of a user device (or any other device described herein), causes the processor to perform the various methods described herein.

In some embodiments, a device is provided for processing game-playing transactions. The device comprises a first communication interface; a second communication interface; and a processor configured to: receive a first request from a user of the device, the first request being associated with a game; conduct, over the first communication interface, a first transaction, the first transaction comprising transmission or reception of first information over the first communication interface, and send, over the second communication interface, a second request associated with the game. The first request or the second request is processed based on: determining a location associated with conducting the first transaction or sending the second request, and determining the location is an approved location associated with the game.

In some embodiments, the first communication interface comprises at least one of a Bluetooth interface, a near-field communication (NFC) interface, or a code-based interface.

In some embodiments, the second communication interface comprises a Wi-Fi or cellular interface.

In some embodiments, the first communication interface and the second communication interface are the same communication interface.

In some embodiments, the second request comprises at least one of a purchase request, the first request, or the first information.

In some embodiments, the location is determined based on global positioning system (GPS) coordinates of the device.

In some embodiments, the device comprises a mobile device or a non-mobile device.

In some embodiments, the second request is approved further based on determining a period of validity associated with the first information has not expired.

In some embodiments, the second request is approved further based on: determining a gaming authority associated with the game; and determining the user is located in an approved jurisdiction associated with the gaming authority for the game.

In some embodiments, the second communication interface is associated with longer range communication compared to the first communication interface.

In some embodiments, the location is determined by at least one of the device or by a second device that receives the second request from the device.

In some embodiments, a method is provided for processing game-playing transactions. The method comprises receiving information associated with a game-playing transaction conducted between a user device and a game-playing terminal, wherein the game-playing transaction is associated with a request for playing a game; determining a location of the user device associated with the game; determining the user device is located in an approved location associated with the game; and processing the game-playing transaction based on determining the user device is located in the approved location associated with the game. The game-playing transaction is conducted on a first communication interface, and the information associated with the game-playing transaction is received on a second communication interface.

In some embodiments, the first communication interface comprises at least one of a Bluetooth interface, a near-field communication (NFC) interface, or a code-based interface.

In some embodiments, the game comprises a lottery game.

In some embodiments, the method further comprises determining a period of validity associated with the information has not expired, and processing the game-playing request based on determining the period of validity associated with the information has not expired.

In some embodiments, the method further comprises processing the game-playing transaction based on: determining a merchant associated with the location of the user device or the game-playing terminal; cross-referencing a list of approved merchants associated with the location of the user device or the game-playing terminal; and determining the merchant is present on the list of approved merchants.

In some embodiments, the game-playing terminal comprises either an electronic game-playing terminal or a non-electronic game playing terminal.

In some embodiments, a device is provided for processing game-playing transactions. The device is configured to: receive information associated with a game-playing transaction conducted between a user device and a game-playing terminal, wherein the game-playing transaction is associated with a request for playing a game using the user device; and process the game-playing transaction based on determining the user device is located in an approved location associated with the game, wherein the location of the user device is determined either by the device or the user device. The game-playing transaction is conducted on a first communication interface, and the information is received on a second communication interface.

In some embodiments, the first communication interface comprises at least one of a Bluetooth interface, a near-field communication (NFC) interface, or a code-based interface.

In some embodiments, the game-playing transaction comprises a game-requesting transaction or a game-purchasing transaction.

According to another embodiment, a non-transitory computer readable medium may be encoded thereon with a program that when executed by a processor of a user device, causes the processor to perform a method that may comprise receiving a game play request from a user, obtaining barcode information associated with a barcode at a location, and sending a gaming request including the barcode information and associated with the game play request over a wireless network to a gaming facilitator.

These and other advantages of the present disclosure will become apparent to those skilled in the art from the following detailed description, the accompanying drawings, and the appended claims.

BRIEF DESCRIPTION OF THE DRAWINGS

FIG. **1** is a schematic diagram illustrating a game play system, in accordance with some embodiments.

FIG. **2**A is a schematic diagram illustrating a communications exchange server, in accordance with some embodiments.

FIG. **2**B is a schematic diagram illustrating a communications exchange server, in accordance with some embodiments.

FIG. **3** is a flow diagram illustrating a process for a game play, in accordance with some embodiments.

FIGS. **4**A and **4**B are flow diagrams illustrating methods for verifying the location of a mobile device, in accordance with some embodiments.

FIGS. **5**A and **5**B are schematic diagrams illustrating processes for game play, in accordance with some embodiments.

FIGS. **6**A, **6**B and **6**C are schematic diagrams illustrating input systems, in accordance with some embodiments.

FIGS. **7**A, **7**B, and **7**C are flow diagrams illustrating processes for a mobile application-based play of a lottery system presented game, in accordance with some embodiments.

FIGS. **8**A, **8**B, and **8**C are flow diagrams illustrating processes for a host-based play and mobile application-based play where the mobile application has a substantially constant connection of an automated lottery system presented game, in accordance with some embodiments.

FIG. **9** is a schematic diagram illustrating a gaming facilitator system, in accordance with some embodiments.

FIG. **10** is a schematic diagram illustrating another game play system, in accordance with some embodiments.

FIG. **11** is a flow diagram illustrating a method for processing game-playing transactions, in accordance with some embodiments.

FIG. **12** is a block diagram of a gaming provider system, in accordance with some embodiments.

FIG. **13** illustrates the back of a lottery gift card and a screen shot of a mobile device texting a short code to initiate a text messaging session with a gaming facilitator, in accordance with some embodiments.

FIG. **14** illustrates a screen shot of the mobile device text messaging session with the gaming facilitator sending a lottery number set generated by a gaming system, in accordance with some embodiments.

FIG. **15** illustrates a screen shot of the mobile device notifying the user of winning and confirming the identity of the user, in accordance with some embodiments.

FIG. **16** illustrates screen shots of the mobile device during payment by a third party payment provider for a low tier win, in accordance with some embodiments.

FIG. **17** illustrates screen shots of the mobile device during payment by a third party payment provider for a low tier win, in accordance with some embodiments.

FIG. **18** illustrates a screen shot of the mobile device providing instructions for payment for a high tier win, in accordance with some embodiments;

FIG. **19** illustrates a method for providing a gaming transaction using the gaming provider system of FIG. **12** or using any other system described herein, in accordance with some embodiments.

FIG. **20** is a block diagram of a gaming provider system and process, in accordance with some embodiments.

FIG. **21** is a block diagram of a winner verification system and process, in accordance with some embodiments.

FIG. **22** is a block diagram of an event-driven lottery player marketing system and process, in accordance with some embodiments.

FIG. **23** is a block diagram of a lottery prize exchange system and process, in accordance with some embodiments.

FIG. **24** is a block diagram of an event-driven lottery messaging system and process, in accordance with some embodiments.

FIG. **25** is a block diagram of a multi-jurisdictional gaming provider system and process, in accordance with some embodiments.

FIG. **26** is a block diagram of a multi-game entry gaming provider system and process, in accordance with some embodiments.

FIG. **27** is a block diagram of a location-aware gaming provider system and process, in accordance with some embodiments.

FIG. **28** is a block diagram of another gaming provider system, in accordance with some embodiments.

FIG. **29** is a block diagram of another gaming provider system, in accordance with some embodiments.

DETAILED DESCRIPTION

The disclosed systems and methods make lottery games accessible to a larger segment of the population by providing an end-to-end lottery solution for integrated game play and sale of lottery products on, for example, hand held devices and smart phones using barcode technology. A player operates an application on a mobile device, which may be provided for download or supplied with the device, that allows them to select lottery games and ticketing options. In some embodiments, the selection can be made at any time and location. The selections are recorded, for example in a virtual shopping cart, by the lottery application on the mobile device. The player purchases these recorded items at locations that are, for example, pre-approved by a gaming facilitator and/or a gaming authority. The locations are equipped to verify the presence of the mobile device at the location using a barcode technology. Redemption of winning plays can be automatically deposited into an account associated with the player or at a retail location by use of, for example, a barcode sent to the mobile device.

The use of barcode technology with an application distributed to mobile devices allows for the following exemplary advantages:

Issuing and managing a trusted execution environment.

Assigning trusted area within a trusted execution environment to a specific service.

Managing keys for a trusted execution environment.

Securely downloading lottery applications to enabled mobile phones, for example by scanning a barcode and directing the user to a secure website to download the application.

Personalizing applications.

Locking, unlocking and deleting the lottery application according to requests from a user or service provider.

Providing secure logging and accounting settlement of all lottery transactions.

The gaming facilitator enables secure data storage of lottery transactions at the device level using, for example, a Universal Integrated Circuit Card (UICC) through processing and transaction confirmation.

The UICC is a physically secure device, an integrated circuit (IC) card, or smart card, that can be inserted and removed from terminal equipment or a mobile device. The UICC may contain one or more applications and may be referred to using different terminology in different territories. A Subscriber Identity Module (SIM) is an application on the UICC containing a mobile subscriber's unique identity.

FIG. **1** is a schematic diagram illustrating a representative embodiment of a game play system **100**. A user **101** may interact with a mobile device **121**. The mobile device **121** may be, for example, a handheld device or smart phone that is already familiar to the user **101** and presents a familiar interface to lottery games. The mobile device **121** may include a processor **122** that is configured to execute programming that may be stored on and/or provided to the mobile device **121**. The mobile device **121** is equipped to use barcode technology thereby being able to read a barcode **123** using, for example, a camera **130** of the mobile device **121**. Alternatively, or in addition, the mobile device **121** may be configured to display a barcode **132** on a display **133** of the mobile device **121** to be read by barcode reader **134**.

By way of example, the barcode **123** or barcode reader **134** may be located at an ATM, a gas pump, or any other retail location. The mobile device **121** may be in communication with the gaming facilitator **125**, which may be in communication with the gaming system **127**. The mobile device **121** may also be in communication system with the financial system **129** directly and/or through the gaming facilitator **125**. The financial system **129** may include, but is not limited to, payment processors, issuer banks, acquirer banks, payment rails, credit networks, etc. The gaming system **127** may include, but is not limited to, a gaming authority, a gaming operator (for example, state lottery operators), a gaming commission (for example, a state lottery commission), etc.

According to another embodiment, the game could be a location-specific game such as Keno or Bingo. In this embodiment, the gaming system **127** would be the computer or system that draws the number for game play. The gaming facilitator **125** would allow the user **101** to interact with the gaming system **127** at the facility. Thus, a user **101** could select a series of numbers on the mobile device **121** and store those numbers for the next gaming play. At the appropriate time, the user **101** would take the mobile device **121** to the barcode reader **134** to communicate the numbers to the gaming system **127** for play. For example, the user **101** may select a button displayed on the display **133** that causes the mobile device **121** to generate a barcode that encodes the numbers and display the barcode on the screen. The barcode reader **134** can then obtain the numbers by reading the barcode. Alternatively, the mobile device **121** may communicate the numbers to the gaming facilitator **125** in association with a reference identification assigned by the mobile device **121** or the gaming facilitator **125** for the game play. The barcode displayed by the mobile device **121** encodes this reference identification thereby enabling the retrieval and identification of the numbers when the barcode reader **134** reads the barcode, which includes the encoded reference identification.

Communications Exchange Server

To sell gaming (or more particularly lottery) tickets through point of sale devices, a communication network is used for communications between a gaming facilitator and gaming partners. Gaming partners are partners that the gaming facilitator interacts with to complete a gaming transaction, such as the gaming system or the financial system. This communication network may have desirable characteristics such as being designed to be secure, reliable, and fast. In an embodiment, each gaming partner may have their own protocol for communicating with and between their systems, servers, and remote devices. Some gaming partners utilize public protocols (e.g., ISO8583) while other gaming partners have generated their own proprietary protocols. To ensure the security of each partner's data and protocols, a server for exchanging communications between a gaming facilitator and a gaming partner may be used.

FIG. **2**A is a schematic diagram of a communications exchange server **200** that exchanges communications between a gaming facilitator **217** and a gaming partner **201**. The communications **203**, **215** may include transaction-specific gaming information. In some embodiments, the communications exchange server **200** is an inbound communications server (as shown) for receiving and sending communications at a gaming facilitator **217** to and from a gaming partner **201**. The communications **215** between the gaming facilitator **217** and the communications exchange server **200** are multiple connections which represents a series of parallel requests. The communications **203** between the communications exchange server **200** and the gaming partner **201** are a single connection which represents a series of serialized requests. In those embodiments, the communications exchange server may be located at the gaming facilitator.

In some embodiments, the communications exchange server **200** is an outbound communications server (not shown) for receiving and sending communications at a gaming facilitator **217** to and from a gaming partner **201**. The communications between the gaming facilitator **217** and the communications exchange server **200** are a single connection which represents a series of serial requests. The communications between the communications exchange server **200** and the gaming partner **201** are multiple connections which represent a series of parallel requests. In those embodiments, the communications exchange server may be located at a gaming partner's site, for example, at a Lottery Operator. A gaming facilitator may send a single request to a communications exchange server that a Lottery Operator send a number of tickets (e.g., "give me 20 tickets"). The communications exchange server may turn that request into a number of requests for one ticket (e.g., 20 requests of, "give me one ticket"), resulting in a number of tickets (e.g., 20 tickets) being generated.

FIG. **2**B is a more detailed schematic diagram of a communications exchange server **200** that exchanges communications between a gaming facilitator **217** and a gaming partner **201**. The device **200** may include a translation module **205**, encryption and decryption module **209**, memory module **211**, processing (CPU) module **207**, multiplexer **212**, and demultiplexer **213**. The translation module **205** may translate communications between a gaming facili-

tator **217** and a gaming partner **201** by translating between a communication protocol used by the gaming partner **201** (e.g., a proprietary format of the gaming partner **201**) and a communication protocol used by the gaming facilitator **217** (e.g., a proprietary format of the gaming facilitator **217**). The encryption and decryption module **209** may encrypt and/or decrypt communications **215** between the gaming facilitator **217** and gaming partner **201**. For example, data arriving at connection **215** from the gaming facilitator **217** may be encrypted. The encryption and decryption module **209** may decrypt the data such that it can be processed by the communications exchange server at the processor **207**. Encryption keys may be used and may be updated at arbitrary times. Further, it may be desired that outgoing data at connection **215** to the gaming facilitator **217** or at connection **203** to the gaming partner **201** be encrypted before it is sent. Accordingly, the encryption and decryption module **209** may encrypt the data according to encryption protocols used by the gaming partner **201** and/or gaming facilitator **217**. The memory module **211** may store information from the communications **203**, **215** between the gaming facilitator **217** and gaming partner **201**. The memory module **211** may also store gaming information. In an embodiment, the memory module **211** is a cache for storing gaming information and Bank Information. The cache **211** may store non-transaction specific gaming information. The cache **211** may also store game-related logic or a portion of game-related logic. The memory module **211** may also be program memory including logic or instructions accessible by the processor module **207**. The processing module **207** may process the communications **203**, **215** between the gaming partner **201** and the gaming facilitator **217**. The translation module **205**, encryption and decryption module **209**, memory module **211**, and processing module **207** are communicatively connected.

As discussed above, the communications exchange server **200** may be considered as an inbound or an outbound communications server. Inbound communications at connection **215**, from one or more gaming partners **201** to gaming facilitator **217** may be multiplexed by the multiplexer **212**. Outbound communications at connection **203** from the gaming facilitator **217** to the one or more gaming partners **201** may be demultiplexed by the demultiplexer **213**.

FIG. **2**B depicts a single translation module **205**, memory module **211**, CPU module **207**, encryption and decryption module **209**, and communications exchange server **200** for simplicity purposes only. At any point of connection between a gaming facilitator **217** and a gaming partner **201**, multiple communications exchange servers **200** may be used for a variety of reasons including, but not limited to, redundancy, speed or efficiency of the system, failure diagnostics, ease of system upgradeability, system back-ups, network monitoring, etc. Further, each communications exchange server **200** may include multiple of any modules in the server **200**. For example, in some embodiments, the communications exchange server **200** includes multiple memory modules **211** and multiple CPU modules **207**. The communications exchange server **200** may be made of one or more machines, one or more motherboards, one or more memory modules, etc.

In an embodiment, the communications exchange server **200** is a computer that translates the gaming partner's communication protocol into a gaming facilitator specific protocol, thereby substantially eliminating the exposure of the partner's protocol to an outside entity. A communications exchange server **200** may be placed at a gaming partner's data center, either inside or outside of the gaming partner's firewall depending upon a gaming partner's preference. The communications exchange server **200** connects to gaming facilitator data centers over a gaming facilitator provided connection. In an embodiment, the gaming facilitator provided connection is a high speed, private connection (e.g., an MPLS connection). While this type of connection provides some inherent security, communications to and from the gaming facilitator may be encrypted to provide an additional layer of protection.

Non-transaction specific information (images, game rules, game information, etc.) may be cached on the device **200** in memory module **211**, which allows for rapid access to cached data. For transaction specific information, data may be passed from the gaming partner **201** to the communications exchange server **200** which then encrypts the data and passes the request to a gaming facilitator **217** via a gaming facilitator provided connection.

The communications exchange server **200** may be used with a variety of gaming partners **201** including, but not limited to, lottery authorities, banking systems, and other payment systems. Further, the communications exchange server **200** may be located at a gaming partner location or at a gaming facilitator location.

User Registration

In an embodiment, a gaming facilitator system may include a user registration server. The user registration server allows users to register with the gaming facilitator system. Registering may allow users to check to see their play history, set spending limits, to select favorite numbers to be played, and to configure how they wish to be notified of their play status. In an embodiment, users may have an online account with the gaming facilitator system in which they may register, configure and make selections for their account with the gaming facilitator system.

Information identifying the registration of the associated information (the play history, spending limits, favorite numbers, notification configuration, etc) may be stored on the gaming facilitator system or on the mobile device **121** as a part of or in association with a gaming application stored on the mobile device **121**.

Play Overview

FIG. **3** is a high-level flow diagram illustrating a process for a gaming system transaction such as a lottery transaction. At action **301**, the mobile device **121** obtains the gaming application. The application may be obtained directly or indirectly from the gaming facilitator **125**. The gaming application can be obtained at anytime prior to gaming purchase.

The action **301** may be omitted if the mobile device already has the gaming application. For example, the gaming application may be preloaded on the mobile device **121** at the time of purchase of the mobile device **121**.

At action **303**, the user **101** selects a game type and ticketing option for gaming play. Game types include but are not limited to lottery play including draw, instant, and any other games offered by the jurisdiction's gaming authority. Other games may include location-specific games, such as Keno or Bingo. The jurisdiction's gaming authority may limit the available game types to approved game types. The selecting of ticketing options may include a number of tickets, numbers played, etc.

In some embodiments, the user **101** can select the game type and ticketing options at any time and in any location even prior to entering an approved retail location. In these embodiments, the gaming application may store the selected game type and ticketing options in, for example, a virtual

shopping cart to be recalled at a later time to complete the transaction. The gaming application may also record previous selections and favorite selections such as favorite numbers to allow easier selection by the user **101**.

At action **305**, the end user presses a "ready to play" or checkout button in the mobile application. The game play system **100** verifies the location of the mobile device **121** and facilitates the user **101**'s gaming purchase using a method such as those described in FIGS. **4**A and **4**B.

FIG. **4**A is a flow diagram illustrating a first exemplary method for verifying the location of the mobile device **121** and facilitating the user **101**'s gaming purchase.

At action **401**, the gaming application prompts the user to scan a barcode at the location. The barcode may be scanned by a peripheral device attached to the mobile device **121** or by the camera **130** of the mobile device **121**. The barcode may be a static barcode displayed at the location, for example on a poster or on a gas pump, or a dynamic barcode generated by a device, such as an ATM or a display incorporated in a gas pump, at the location. The barcode may be valid only for a period of time preventing the reuse of an old barcode at another location.

At action **403**, the gaming application sends a gaming request including the selected game type and ticketing option along with the scanned barcode information to the gaming facilitator **125** using a mobile network such as Wi-Fi or CDMA/GSM. The scanned barcode information may include the barcode itself as an image file or as information encoded within the barcode that is decoded by the gaming application prior to sending the request.

At action **405**, the gaming facilitator **125** processes a location verification of the mobile device **121**, checks game availability, play limits and other lottery game play parameters. Location verification can be performed by a variety of means. According to one embodiment, the merchant may be required to be included on a list of pre-approved merchants to vend gaming tickets at the location. This list can be maintained by an appropriate authority, such as a facilitator or gaming authority. The gaming facilitator **125** cross-references the scanned barcode information to determine if the scanned barcode information corresponds with the location. The gaming facilitator **125** may also cross-reference a period of validity associated with the scanned barcode information to confirm that the scanned barcode is a recent and valid barcode.

According to another embodiment, location verification can be performed by other technology within the mobile device, such as GPS or radio tower triangulation. Ultimately, most gaming facilitators will need to take sufficient steps to confirm that the purchaser of the tickets is physically located within the jurisdiction of the gaming authority to avoid any legal complications associated with selling gaming tickets outside of the jurisdiction of the gaming authority.

At action **407**, the gaming facilitator **125** processes transaction payment through, for example, an integrated standardized ticketing system with eWallet platforms or a direct gateway to payment processing partners. The mobile application may also process payment using other methods at a retail location, such as through the use of a Near Field Communications (NFC) Transaction Anchor Point (TAP). In some embodiments, the gaming facilitator **125** communicates with the payment processing partners to obtain payment.

FIG. **4**B is a flow diagram illustrating a second exemplary method for verifying the location of the mobile device **121** and facilitating the user **101**'s gaming purchase.

At action **451**, the gaming application sends a gaming request including the selected game type and ticketing option to the gaming facilitator **125** using a mobile network such as Wi-Fi or CDMA/GSM. The gaming request is identifiable based on content or a reference identifier assigned by the gaming application or the gaming facilitator **125**. Thus, communication between the mobile device **121** and the gaming facilitator **125** may be one or two way. Note that as explained below, this step is optional in some embodiments.

At action **453**, the gaming application generates a barcode encoding the reference identifier and displays the barcode on the display **133**.

At action **455**, the user presents the displayed barcode to a terminal at the location. The terminal may be, for example, an ATM machine, a gas pump, or a stand alone device. The terminal reads the barcode displayed on the mobile device **121** and sends a notification to the gaming facilitator **125** that the barcode was read at the location. The terminal may send an image of the barcode or information encoded by the barcode that is decoded by the terminal.

In another embodiment, the barcode generated by the mobile application includes some or all of the information included in the gaming request, which may reduce the amount of information that is sent from the mobile device **121** to the gaming facilitator **125** with a larger portion of the information in the gaming request then being sent by the terminal that reads and decodes the barcode to the gaming facilitator. In the case where all of the information in the gaming request is encoded in the barcode, it is not necessary for the mobile device **121** to itself send any information to the gaming facilitator **125** (the information being sent by the terminal reading the barcode) nor is the reference identifier needed. The mobile device **121** may also transmit information to the terminal over a short range wireless connection such as WiFi or Bluetooth to reduce the amount of information encoded in the barcode.

At action **457**, the gaming facilitator **125** processes a location verification of the terminal if needed or required by the gaming system to verify eligibility of play at the location of the terminal, checks game availability, play limits and other lottery game play parameters.

At action **459**, the gaming facilitator **125** processes transaction payment through, for example, an integrated standardized ticketing system with eWallet platforms or a direct gateway to payment processing partners. The mobile application may also process payment using other methods at a retail location, such as through the use of a Near Field Communications (NFC) transaction anchor point (TAP). In some embodiments, the gaming facilitator **125** communicates with the payment processing partners to obtain payment.

Returning now to FIG. **3**, at action **307**, upon payment authorization, the gaming facilitator **125** sends the ticket request to a computerized gaming system (CGS), such as gaming system **127**. The gaming system may use a Random Number Generator (RNG) to produce the gaming play. In an embodiment using a "Virtual Instant Ticket," the RNG may not be used but the purchase will be sent to the CGS for processing and balancing. The gaming system **127**, in communication with the gaming facilitator **125**, verifies and completes the gaming transaction. According to another embodiment, pre-existing or favorite numbers can be entered or stored in the mobile device **121** or at the gaming facilitator **125**. These numbers are sent to the gaming system **127** at step **307**.

At action **309**, the gaming facilitator **125** sends the gaming transaction information to the Internal Control System (ICS) of the gaming system **127** for independent logging. This action is not always requested and may not be present in some embodiments.

At action **311**, the gaming facilitator **125** sends a notification of the purchase status to the gaming application. This notification may include, for example, numbers played, ticket serial number, date of draw, and payment authorization code along with other transaction specific information. In some embodiments the notification includes a numeric redemption code, a scannable barcode such as a QR code, or any other type of redeemable code that can be securely sent to the mobile application along with the notification. The barcode or redemption code can be used after a draw to check and claim winning numbers at an existing gaming/lottery terminal or retail location.

In the case where the transaction was not able to be completed, information notifying of the failure to complete may be sent to the mobile device **121**. The notification may include other information associated with the failure, for example, what exception caused the failure.

In some embodiments, automated paperless receipts are provided to indicate numbers and games played. This notification may be sent via multiple methodologies including email, wireless delivery to mobile devices utilizing SMS text or device specific applications, RSS feed, or feeds into Twitter, Facebook or other social media accounts.

The notification may also include an automated remote notification that may be sent to the user **101** indicating play status (winner, winner of a certain amount of money, winner with manual redemption, non-winner, winning numbers, what the winning numbers were if the game was lost, game jackpots, game statistics, and other statistics). Notifications may be sent directly to the user **101** through the gaming application as well as via wireless delivery to a mobile device or email address using, for example, SMS text, email, RSS feed to Twitter, Facebook or other social media account, through device specific apps (i.e. iPhone, BlackBerry, or PDA apps) and, through automated lottery system web sites.

Redemption

When the user **101** wins a game, the user **101** will want to redeem his or her winnings. At action **313**, a winner identification interface of the mobile application utilizes transaction data to query data from the gaming facilitator **125** to find winning ticket numbers. The data may be separated into three categories: non-winning tickets, winning tickets available for auto-redemption, and winning tickets available for manual claims. An additional winner verification system that a lottery facilitator may provide may be used by a game administrator to verify the integrity of tickets and to validate that a presented ticket is a winner for items that are manually claimed. The gaming facilitator **125** obtains the queried data from the gaming system **127** and provides it to the mobile application.

At action **315**, the mobile application facilitates the redemption of winnings. Redemption may be completed using a variety of methods selected based on, for example, a selection of a preferred method by the user **101** or the amount of the winnings.

As a first example, the mobile application may provide for the display of the barcode received in the notification in connection with action **311**. A retail location can then read the barcode to verify the win and provide the winnings.

As a second example, the winnings are automatically deposited to an account associated with the user **101**. In some embodiments, the user **101** may tap the mobile device **121** to a NFC TAP to initiate a transfer of funds through financial system **129**. An eWallet system may also be accessed for an auto-deposit of winning tickets through a point of sale terminal, debit, and/or credit network to allow for the redemption of winning tickets under a taxable or manually verifiable limit via a pin-less debit card or credit card transaction. A unique terminal number may be used for this transaction, and a pin or card may or may not be used for completion of the transaction.

FIG. **5**A is a schematic diagram illustrating a process for a game play. At action **501**, the mobile device **121** downloads the mobile application from the gaming facilitator **125**. At action **503**, the user **101** uses the mobile application running on the mobile device **121** to select game play and ticketing options. The user **101** may make the game play and ticketing option selections at anytime prior to entering an approved retail location. At action **505**, the user **101** presses a checkout or ready to play button displayed on the mobile device **121**. At action **507**, the user scans the barcode **123** displayed at the retail location. At action **509**, the mobile device **121** sends a request associated with the game play request including the barcode information to the gaming facilitator **125**. The request may include an image of the barcode, a value representing information encoded by the barcode, or other information to verify that the user was in a location at which the barcode was displayed.

At action **511**, the gaming facilitator **125** verifies the location of the mobile device **121** based on the barcode information provided in the game play request. As mentioned previously, the physical location of the user and the mobile device at the time of the payment transaction can have implications for the legality of the transaction, depending upon the laws of the jurisdiction in which the gaming authority is operating.

At action **513**A, the gaming facilitator **125** processes payment authorization through a direct gateway with financial system **129**. In other embodiments, payment may be processed directly between the mobile device **121** and the financial system **129** as shown in action **513**B. In still other embodiments, payment may be processed by tapping the mobile device **121** to a Near Field Communications (NFC) Transaction Anchor Point (TAP) **520** as shown in action **513**C. In this embodiment, the NFC TAP **520** initiates the payment instruction to the financial system **129**, as shown in action **513**D.

At action **515**, the gaming facilitator **125** sends a ticketing request to the gaming system **127**, for example the lottery authority in the jurisdiction, which verifies and completes the gaming transaction.

At action **517**, the gaming facilitator **125** sends ticket information and confirmation to the mobile device **121**.

At action **519**, the gaming facilitator **125** sends gaming processing and balancing information including transaction logs to the gaming system **127**.

FIG. **5**B is a schematic diagram illustrating a process for a game play. At action **551**, the mobile device **121** downloads the mobile application from the gaming facilitator **125**. At action **553**, the user **101** uses the mobile application running on the mobile device **121** to select game play and ticketing options. The user **101** may make the game play and ticketing option selections at anytime prior to entering an approved retail location. At action **555**, the user **101** presses a checkout or ready to play button displayed on the mobile device **121**. The mobile application generates a barcode that is displayed on the screen of the mobile device **121**. At action **557**, the user scans the barcode displayed on the

screen of the mobile device **121** at a terminal **570** installed at the retail location. The barcode may encode some or all of the information associated with the game play request. The terminal **570** may be an ATM machine, a gas pump, a stand alone device, etc. At action **559**A, the mobile device **121** sends a request associated with the game play request to the gaming facilitator **125**. The request may include some or all of the information encoded in the barcode. At action **559**B, the terminal **570** sends transaction information to the gaming facilitator **125** informing the gaming facilitator **125** of the transaction with the mobile device **121**. The transaction information may include some or all of the information encoded by the barcode. The request may include an image of the barcode, a value representing information encoded by the barcode, or other information to verify that the user was in the location at which the barcode was read.

For example, the barcode may include an identifier number that is preassigned to the mobile device **121** or randomly generated. The mobile device **121** may send the gaming request including all the game play parameters and the identifier number to the gaming facilitator **125**. In such an embodiment, the terminal **570** may only send the identifier decoded from the barcode to the gaming facilitator **125**. In receipt of this information, the gaming facilitator **125** obtains the game play request information and the information needed to verify that the mobile device **121** was in the same location as the terminal **570**. In other embodiments, the mobile application may encode all of the game play request information in the barcode read by the terminal **570**. In such an embodiment, it is not necessary that the mobile device **121** sends any information to the gaming facilitator **125** and all of the information needed to obtain the game play request and verify that the mobile device **121** is in the same location as the terminal **570** can be provided to the gaming facilitator **125** by the terminal **570**. It will be appreciated that the information transmitted to the gaming facilitator **125** by the mobile device **121** and the terminal **570** may be apportioned between these devices in any of a number of ways and the above discussion is exemplary in nature.

At action **561**, the gaming facilitator **125** verifies the location of the mobile device **121** based on the barcode information provided by the terminal **570**. As mentioned previously, the physical location of the user and the mobile device at the time of the payment transaction can have implications for the legality of the transaction, depending upon the laws of the jurisdiction in which the gaming authority is operating.

At action **563**A, the gaming facilitator **125** processes payment authorization through a direct gateway with financial system **129**. In other embodiments, payment may be processed directly between the mobile device **121** and the financial system **129** as shown in action **563**B. In still other embodiments, payment may be processed by tapping the mobile device **121** to a Near Field Communications (NFC) Transaction Anchor Point (TAP) **572** as shown in action **563**C. In this embodiment, the NFC TAP **572** initiates the payment instruction to the financial system **129**, as shown in action **563**D. In embodiments where the terminal **570** is capable of performing financial transactions, such as an ATM or a device equipped with a bill reader, the terminal **570** may register the transaction with the financial system **129** at action **563**E and accept the payment from the user.

At action **565**, the gaming facilitator **125** sends a ticketing request to the gaming system **127**, for example the lottery authority in the jurisdiction, which verifies and completes the gaming transaction.

At action **567**, the gaming facilitator **125** sends ticket information and confirmation to the mobile device **121**.

At action **569**, the gaming facilitator **125** sends gaming processing and balancing information including transaction logs to the gaming system **127**.

The above-described playing processes allow for gaming purchases such as lottery games on mobile devices while providing the assurances and verification that the sale of the gamine products occurred within the borders of the government regulating the games.

In some embodiments, the gaming facilitator **125** provides a retailer signup program as part of the mobile application. Prior to the sale of gaming (e.g., lottery) tickets a retail location or merchant may be required to be included on a list of pre-approved locations or merchants. This list can be maintained by an authority appropriate to ensure that the geographic location of the retail location or merchant has been confirmed. This could be the gaming facilitator or the gaming authority.

Embodiments of the terminal **570** may include an existing ATM or NFC device at a retailer, a dedicated gaming/lottery device at the retailer, or a device placed in conjunction with a new or existing lottery terminal.

Application Logic

Lottery system logic may reside at a device associated with the lottery system, such as the terminal or the gaming facilitator, within the gaming application on the mobile device, or both at the device and the host.

FIG. **6**A is a schematic diagram illustrating a host-based input system **610**. With the host-based terminal **610**, the mobile device **611** is a user input/display device. The application logic **614** that determines what happens with each input and provides decision-making for what to display to the user occurs on a remote host **612**. The host **612** contains automated lottery system logic and may gather the user input by providing the appropriate screens to the mobile device **611** (for example, to a gaming application running on the mobile device **611**) and forwarding the user input to the gaming facilitator **613** either through an intermediary communications exchange server (not shown) or to the gaming facilitator **613** directly.

FIG. **6**B is a schematic diagram illustrating a terminal-based input system **620**. Terminal-based input systems have automated lottery system application logic **624** on the mobile device **621**, for example as part of the mobile application stored on the mobile device **621**. Accordingly, the mobile device **621** has the ability to walk a user through the game process and may then send the information that the user has selected to a gaming facilitator **623** either through an intermediary communications exchange server (not shown) or to the gaming facilitator directly.

FIG. **6**C is a schematic diagram illustrating a hybrid-based input system **630**. Hybrid-based input systems have some application logic **634**A stored at the mobile device **631**, for example as part of the mobile application stored on the mobile device **631**, to gather user input and display the game specific parameters, but also rely on some application logic **634**B stored at a remote host **632** to control the automated lottery system flow. An example of this is a cell phone with an automated lottery system application where the application on the phone controls the layout of the screen, receives user input, and performs basic validation (e.g., prevents the user from inputting text into numeric fields). But the cell phone may communicate with a host **632** to determine the order of the screens to display. The remote host **632** may communicate with a gaming facilitator **633**

either through an intermediary communications exchange server (not shown) or with the gaming facilitator directly.

FIGS. 7A, 7B, and 7C are flow diagrams **700**, **720**, **740** illustrating a process for a mobile application-based play of an lottery system presented game. At action **702**, a mobile application announces the ability for a user to play a game. In some embodiments, the mobile application may present a screen indicating that the mobile application is capable of providing game plays to the user. If a user decides to play a game, the mobile application requests that the user input identification information at action **704**. For example, the mobile application may ask the user for their preferred language at action **704**. For example, the mobile application may request that the user swipe a debit card and enter their debit card pin or provide information regarding an account with an eWallet platform at action **704**.

The mobile application may optionally request that the user verify their age at action **706** if the user's age has not been verified by previous input at the mobile application. The mobile application may also optionally present a list of game options available through the mobile application at action **708**. The list may include games that will become available at a future time and an indication that those games will be available in the future.

At action **710**, the mobile application may present options for the selected game. For example, the mobile application may present the number of tickets available for purchase, game play times available, etc. at action **710**. The terminal may also ask the user whether they would like to have their numbers sent to them or a link to their numbers sent to them. The mobile application presents the cost associated with the user's selections as well as any necessary legal disclosures at action **712**. At any point in the process, the user may cancel the transaction at action **701**.

The user scans a barcode at the retail location, and at action **713**, the mobile application sends gaming information collected from the user to a gaming facilitator at action C. The barcode may be static displayed at the retail location on a sign or display or it may be dynamic generated by a terminal device such as an ATM or gas pump. The user may be required to make a selection following a prompt displayed on the terminal to request that the terminal display the barcode. In embodiments where the terminal generates a dynamic (for example random) barcode, the terminal may inform the gaming facilitator and/or gaming authority that the barcode has been generated along with an identifier to identify the barcode. The generated barcode may be valid only for a limited time. Static barcodes may also be valid only for a limited time.

As discussed above, in some embodiments, the mobile application displays the barcode, which is read by a terminal at the retail location at action **713**. The terminal then informs the gaming facilitator of the read barcode.

The gaming facilitator may verify information format of the information sent by the terminal at action **722**. For example, at action **722**, the gaming facilitator may determine whether the information is sufficient and complete for a certain game play. The gaming facilitator may also ensure that the information is not corrupt. The gaming facilitator may also verify a user's age if their driver's license was presented at the terminal. If a driver's license is required by the game, but was not presented at the terminal, the gaming facilitator may cancel the transaction. If the transaction is canceled, the terminal may display a cancel message indicating the reason for the cancellation.

At action **723**, the gaming facilitator verifies the location of the user. For example, the gaming facilitator may verify the location of the terminal that generated the barcode by referring to a pre-approval of the terminal with the gaming facilitator and/or the lottery authority. The gaming facilitator may also refer to a list of barcodes that are currently valid.

The gaming facilitator may also confirm the location of the retail location at which the barcode was read in embodiments where the mobile application generates the barcode.

At optional action **724**, the gaming facilitator may look up the user to determine preferences for that user. These preferences can include a list of pre-stored or favorite numbers to be used in the game play. Other preferences can include whether the user desires automatic redemption of winning plays, or manual redemption through the delivery of a redemption code to the mobile device **121**.

At optional action **726**, the gaming facilitator may determine whether the user has opted out of the gaming system, whether the user has already hit their spending limit for a certain time period, etc. If either determination is affirmatively made at optional action **726**, then the gaming facilitator sends a message back to the mobile application to display to the user at action **738** and the process may begin again with the same or a new user at action B. If the determination is not affirmatively made at optional action **726**, then the process continues.

At action **727**, the gaming facilitator may request a transfer of funds for the transaction. For example, the gaming facilitator may request that a payment processor verify the user PIN number, whether enough funds are available in the user account for the transaction, and to transfer the funds. The payment processor determines whether the pin is correct and whether funds are available and sends a response to the gaming facilitator. The gaming facilitator receives the response from the payment processor at action **728**. The response may include, for example, verification from the payment processor whether the PIN is correct, whether funds are available, and/or whether the funds were transferred. If the gaming facilitator receives verification that the PIN is correct, that sufficient funds are available, and that the funds have been transferred at action **730**, the gaming facilitator generates random numbers or uses user-specified numbers for the game play at action **732**. If the gaming facilitator receives notification that the PIN is incorrect, that sufficient funds are not available, or that the funds were not transferred at action **730**, the gaming facilitator sends a message back to the terminal to display to the user at action **738** and the process may begin again with the same or a new user at action A. A request for the desired number of tickets and games along with game information is sent by the gaming facilitator to the lottery operator at action D.

The lottery operator validates information received from the gaming facilitator and generates tickets if the information is validated at action **742**. The gaming facilitator determines whether the tickets were generated correctly at action **744**. If the tickets were not generated correctly, the gaming facilitator requests a funds reversal to the payment processor, and the payment processor may reverse the funds back to the user account at action **756**. The gaming facilitator sends a message back to the mobile application to display to the user at action **738** and the process may begin again with the same or a new user at action B. If the tickets were generated correctly, the gaming facilitator will store game play information at action **746**. The gaming facilitator sends to the terminal game play numbers, transaction numbers, and a confirmation of the transaction. The mobile application may prompt the user to indicate whether to receive a receipt electronically or obtain a barcode for use in redeem-

ing winnings at action **748**. If the mobile device is equipped with a printer or configured to access a printer, the mobile application may prompt the user to indicate whether to receive a printed receipt. If the user selects to print the receipt, the terminal prints the receipt at action **752** and the process may begin again with the same or a new user at action B. If the user selects to receive the receipt electronically, the terminal gathers user information and sends the electronic receipt at action **750**. The process may begin again with the same or a new user at action B.

Host-based mobile applications are mobile applications that receive instructions from a host instead of having internal local logic. Accordingly, a process for a host-based play of a lottery system presented game is slightly different than the mobile application-based play. A host-based terminal is connected to a host from the beginning of a transaction or at each step requiring new information between user actions, whereas a mobile application-based terminal might connect to the host or to a gaming facilitator after certain decisions and actions are taken by a user during a transaction. Being connected earlier allows the host-based mobile application to query a gaming facilitator database for information about the user at an earlier time in the transaction. This is also the case for mobile application-based play flow where the mobile application has a substantially constant connection such as with a network connection like Wi-Fi or CDMA/GSM.

FIGS. **8**A, **8**B, and **8**C are flow diagrams **800**, **820**, **840** illustrating a process for a host-based play (and mobile application-based play where the mobile application has a substantially constant connection) of an automated lottery system presented game. At action **802**, a mobile application announces the ability for a user to play a game. For example, the mobile application may present a screen indicating that the mobile application is capable of providing game plays to the user. If a user decides to play a game, the mobile application requests that the user input identification information at action **804**. In some embodiments, the mobile application may ask the user for their preferred language at action **804**. In some embodiments, the mobile application may request that the user swipe a debit card and enter their debit card pin or provide information regarding an account with an eWallet platform at action **804**.

In an embodiment, at optional action **805**, the gaming facilitator may determine whether the user has opted out of the automated gaming system, whether the user has already hit their spending limit for a certain time period, etc. If either determination is affirmatively made at optional action **805**, then the gaming facilitator system cancels the transaction at action **801**. The system may send a message back to the mobile application to display to the user and the process may begin again with the same or a new user at action E. If the determination is not affirmatively made at optional action **805**, then the process continues at action **806**.

The mobile application also requests that the user verify their age at action **806** if the user's age has not been verified by previous input at the terminal. The mobile application sends card information to a gaming facilitator (via a mobile device) at action **808** to determine whether the user is a registered user. The mobile application may present a list of game options available at the user's location at action **810**. The list may include games that will become available at a future time and an indication that those games will be available in the future. At action **812**, the mobile application may present options for the selected game. For example, the mobile application may present the number of tickets available for purchase, game play times available, etc. at action **812**. The mobile application may also ask the user whether they would like to have their numbers sent to them or a link to their numbers sent to them. The mobile application presents the cost associated with the user's selections as well as any necessary legal disclosures at action **814**. At any point in the process, the user may cancel the transaction at action **801**.

The user scans a barcode at the retail location, and at action **815**, the mobile application sends gaming information collected from the user to a terminal host at action F. The barcode may be static displayed at the retail location on a sign or display or it may be dynamic generated by a terminal device such as an ATM or gas pump. The user may be required to make a selection following a prompt displayed on the terminal to request that the terminal display the barcode. In embodiments where the terminal generates a dynamic (for example random) barcode, the terminal may inform the gaming facilitator and/or gaming authority that the barcode has been generated along with an identifier to identify the barcode. The generated barcode may be valid only for a limited time. Static barcodes may also be valid only for a limited time.

As discussed above, in some embodiments, the mobile application displays the barcode, which is read by a terminal at the retail location at action **815**. The terminal then informs the gaming facilitator of the read barcode.

At action **822**, a terminal host determines based on the information sent from the mobile application that the transaction is a gaming facilitator transaction. The host may forward the information to the gaming facilitator. The gaming facilitator may verify information format of the information sent by the mobile application at action **824**. For example, at action **824**, the gaming facilitator may determine whether the information is sufficient and complete for a certain game play. The gaming facilitator may also ensure that the information is not corrupt. The gaming facilitator may also verify a user's age if their driver's license was presented at the terminal. If a driver's license is required by the game, but was not presented at the terminal, the gaming facilitator may cancel the transaction. If the transaction is canceled, the terminal may display a cancel message indicating the reason for the cancellation.

At action **825**, the gaming facilitator verifies the location of the user. For example, the gaming facilitator may verify the location of the terminal that generated the barcode by referring to a pre-approval of the terminal with the gaming facilitator and/or the lottery authority. The gaming facilitator may also refer to a list of barcodes that are currently valid.

The gaming facilitator may also confirm the location of the retail location at which the barcode was read in embodiments where the mobile application generates the barcode.

In an embodiment, at optional action **826**, the gaming facilitator may look up the user to determine preferences for that user. At action **826**, the gaming facilitator may determine whether the user has opted out of the gaming system, whether the user has already hit their spending limit for a certain time period, etc. If either determination is affirmatively made at action **826**, then the gaming facilitator sends a message back to the mobile application (e.g., via the mobile device) host to display to the user at action **838** and the process may begin again with the same or a new user at action E. If the determination is not affirmatively made at action **826**, then the process continues.

At action **827**, the gaming facilitator may request a transfer of funds for the transaction. For example, the gaming facilitator may request that a payment processor verify the user PIN number, whether enough funds are

available in the user account for the transaction, and to transfer the funds. The payment processor determines whether the pin is correct and whether funds are available and sends a response to the gaming facilitator. The gaming facilitator receives the response from the payment processor act action **828**. The response may include, for example, verification from the payment processor whether the PIN is correct, whether funds are available, and/or whether the funds were transferred.

The gaming facilitator receives verification from the payment processor whether the PIN is correct, whether funds are available, and/or whether the funds were transferred at action **828**. If the gaming facilitator receives verification that the PIN is correct, that sufficient funds are available, and that the funds have been transferred at action **830**, the gaming facilitator generates random numbers or uses user-specified numbers for the game play at action **832**. If the gaming facilitator receives notification that the PIN is incorrect, that sufficient funds are not available, or that the funds were not transferred at action **830**, the gaming facilitator sends a message back to the terminal (e.g., via the terminal host) to display to the user at action **838** and the process may begin again with the same or a new user at action E. A request for the desired number of tickets and games along with game information is sent by the gaming facilitator to the lottery operator at action G.

The lottery operator validates information received from the gaming facilitator and generates tickets if the information is validated at action **842**. The gaming facilitator determines whether the tickets were generated correctly at action **844**. If the tickets were not generated correctly, the gaming facilitator requests a funds reversal to the payment processor, and the payment processor may reverse the funds back to the user account at action **856**. The gaming facilitator sends a message back to the terminal to display to the user at action **838** and the process may begin again with the same or a new user at action E. If the tickets were generated correctly, the gaming facilitator will store game play information at action **846**. The gaming facilitator sends to the terminal (e.g., via the terminal host) game play numbers, transaction numbers, and a confirmation of the transaction. The terminal may prompt the user to indicate whether to print a receipt at the terminal or receive a receipt electronically at action **848**. If the user selects to print the receipt, the terminal prints the receipt at action **852** and the process may begin again with the same or a new user at action E. If the user selects to receive the receipt electronically, the terminal gathers user information and sends the electronic receipt at action **850**. The process may begin again with the same or a new user at action E.

FIG. **9** is a schematic diagram illustrating a gaming facilitator system **900**. System **900** may include a terminal **910**, a payment processor **920**, a gaming facilitator reporting data center **930**, a gaming authority **940**, gaming authority operators **950** and gaming facilitator transaction data center **960**.

The gaming facilitator transaction data center **960** is in communication with the terminal **910**, the payment processor **920**, the gaming facilitator reporting data center **930** and the gaming authority **940**. Using alternative connectivity, the gaming facilitator transaction data center **960** may be in communication with the gaming authority operators **950**. In some embodiments, the communication with the gaming facilitator transaction data center **950** may be made via communications exchange servers **961**, **963** and **965**. Firewalls **921**, **931**, **941**, **942**, **951**, **952** and **967-974** provide isolation between various systems and components in the system **900**.

The payment processor **920** may include payment processor data center **923**. The payment processor **920** connects with the gaming facilitator transaction data center **960** via a secure connection (e.g., MPLS or other "private" connection) between the firewall **921** at the payment processor **920** and the firewall **968** at the gaming facilitator transaction data center **960**.

The gaming facilitator reporting data center **930** may include reporting system **934** and reporting database **936**. The gaming facilitator reporting data center **930** connects with the gaming facilitator transaction data center **960** via a secure connection (e.g., MPLS or other "private" connection) between the firewall **931** at the gaming facilitator reporting data center **930** and the firewall **969** at the gaming facilitator transaction data center **960**.

The gaming authority **940** may include a reporting interface **944** and a transaction validation database **946**. The gaming authority **940** connects with the gaming facilitator transaction data center **960** via a secure connection (e.g., MPLS or other "private" connection) between the firewall **941** at the gaming authority **940** and the firewall **973** at the gaming facilitator transaction data center **960**. Also, the gaming authority **940** connects with the firewall **932** of the gaming facilitator reporting data center **930** via a secure connection (e.g., MPLS or other "private" connection.

The gaming authority operators **950** may include a lottery ops (operations) **954**, an FEP **956** and lottery terminals **958**. The lottery ops **954** is in communication with the FEP **956**, which is in communication with the lottery terminals **958**. The gaming authority operators **950** connects with the gaming authority **950** via a secure Ethernet connection (e.g., B to B API) between the firewall **942** at the gaming authority **940** and the firewall **951** at the gaming authority operators **950**. Alternate connectivity may be provided between the firewall **974** of the gaming facilitator transaction data center **960** and the firewall **952** of the gaming authority operators **950**.

The gaming facilitator transaction data center **960** may include a gaming facilitator FEP **980**, core logic **982**, transaction logic **984**, lottery logic **986**, a gaming facilitator database **988** and logging security **990**. The core logic **982**, the transaction logic **984** and the lottery logic **986** are in communication with one another. The core logic **982** is in communication with the gaming facilitator FEP **980** through firewall **975**. The gaming facilitator database **988** is in communication with the transaction logic **984**. The logging security **990** is in communication with the gaming facilitator **980**, the core logic **982**, the transaction logic **984** and the gaming facilitator database **988**.

It will be appreciated that the above discussion of a ticket, a gaming ticket, a lottery ticket, etc is not limited to a particular type of ticket or transaction and the embodiments described above are applicable to all types of electronically facilitated transactions including, among other things, e-ticketing, the sale of e-tickets, etc.

Referring now to FIG. **10**, in some embodiments, the device **121** (either a mobile device or a non-mobile device) comprises a first communication interface for communicating with a game-playing terminal **1034**. In some embodiments, the game-playing terminal **1034** may be at a gas station. For example, the game-playing terminal **1034** may be integrated into a gas pump or be near a gas pump. Additionally or alternatively, the game-playing terminal **1034** may be located in a store in the gas station. Addition-

ally or alternatively, the game-playing terminal **1034** may be a point-of-sale device, a kiosk, an ATM machine, a coupon terminal, an arcade game-playing machine, a vending machine, etc. In some embodiments, the device **121** may comprise or be comprised in a motor vehicle. The first communication interface comprises a Bluetooth Low Energy (BLE) interface. The game-playing terminal **1034** may be either an electronic or non-electronic terminal and may transmit a code to the device **121** over the first communication interface. Codes from the game-playing terminal **1034** may be transmitted continuously or during certain periods of time (e.g., when activated). A code transmitted from the game-playing terminal **1034** may be a unique identifier for the game-playing terminal **1034**. The reception of the code by the device **121** and/or the transmission of the code by the game-playing terminal **1034** may be referred as a transaction conducted between the device **121** and the game-playing terminal. Once the code is received by the device **121**, the device **121** sends a request to at least one of the gaming facilitator **125** or the financial system **129**. The request may be sent via a second communication interface (e.g., a Wi-Fi or cellular interface). The second communication interface may be associated with longer range communication compared to the first communication interface. The request may be processed based on the location of the device **121** associated with conducting the transaction or sending the request being an approved location associated with the game. The request may be processed by at least one of the device **121**, the game-playing terminal **1034**, the gaming facilitator **125**, or the financial system **129**. The location may be determined by the device **121**, by the game-playing terminal **1034**, by the gaming facilitator **125**, or the financial system **129**. In some embodiments, the location of the device **121** may be determined using GPS coordinates of the device **121**. Multi-factor authentication may be used to determine the location of the device **121**. For example, the location of the game-playing terminal **1034** (e.g., the identity of the game-playing terminal **1034**) may be used along with the GPS coordinates of the device **121** to determine the location of the device **121**.

In some embodiments, the device **121** receives a request from a user of the device. The request may be a game-playing request or a game-purchasing request. Either request may be associated with a mobile game-playing application. In some embodiments, the mobile game-playing application is initiated on the device **121** upon detecting the presence of the game-playing terminal **1034** within the proximity of the device **121** (e.g., upon detecting a code received at the device **121** from the game-playing terminal **1034**). In some embodiments, the device **121** may be configured to prompt a user to play a game on the mobile device in response to determining the device **121** is within a threshold distance (e.g., radius) of the game-playing terminal **1034**. In some embodiments, the request transmitted via the second communication interface may comprise at least one of the request received from the user of the device or the code received from the game-playing terminal **1034**. In some embodiments, the request is processed (e.g., approved) based on determining a period of validity associated with the code received from the device **121** has not expired. In some embodiments, the request is further processed (e.g., further approved) based on determining a gaming authority associated with the game, and determining the user is located in an approved jurisdiction associated with the gaming authority for the game.

Referring now to FIG. **11**, FIG. **11** presents a method for processing game-playing transactions. At block **1110**, the method comprises receiving (e.g., on a second communication interface) information (e.g., from a user device) associated with a game-playing transaction conducted (e.g., on a first communication interface), via a BLE interface, between a user device and a game-playing terminal. In some embodiments, a BLE interface may refer to any form or type of Bluetooth technology. A BLE interface is not limited to any particular minimum or maximum communication range. A BLE interface is also not limited to any particular minimum or maximum energy. In some embodiments, both the first communication interface and the second communication interface may be the same communication interface such that the information is received via the same communication interface on which the game-playing transaction is conducted. The game-playing transaction is associated with a request for playing a game. At block **1120**, the method comprises determining a location of the user device associated with the game. In some embodiments, the location of the user device is determined by at least one of the user device, the game-playing terminal, or the device that receives (e.g., from the user device) information associated with the game-playing transaction. At block **1130**, the method comprises determining the user device is located in an approved location associated with the game. This determination may be made by the user device or by the device that receives the information associated with the game-playing transaction. At block **1140**, the method comprises processing (e.g., approving) the game-playing transaction based on determining the user device is located in the approved location associated with the game. In some embodiments, processing the game-playing transaction is based on determining an identity of the merchant or game-playing terminal associated with the location of the user device or the game-playing terminal. Once the identity of the merchant or game-playing terminal is determined, the game-playing transaction is approved based on determining the identified merchant or game-playing terminal is on a list of approved merchants or game-playing terminals. In some embodiments, the game-playing terminal (or the merchant) may be identified by accessing a correlation matrix and looking up a corresponding merchant (or game-playing terminal).

In some embodiments, a method is provided for processing game-playing transactions. The method comprises: receiving or sending information associated with a game-playing transaction between a user device and a game-playing apparatus, wherein the game-playing transaction is associated with a game; determining a location of the user device or the game-playing apparatus associated with the game-playing transaction; determining the user device or the game-playing apparatus is located in an approved location associated with the game; processing a game-playing transaction or enabling initiation or conduction of the game-playing transaction based on at least one of: determining the user device or the game-playing apparatus is located in the approved location associated with the game based on cross-referencing second location information or identification information, and determining the location matches the second location information or identification information, or determining a period of validity associated with the information has not expired, wherein the game-playing transaction is conducted on a first communication interface, and wherein the information associated with the game-playing transaction is received or sent on the first communication interface or a second communication interface.

In some embodiments, the identification information comprises merchant information.

In some embodiments, the information associated with the game-playing transaction comprises at least one of game-playing request information, pre game-playing transaction information, post game-playing transaction information, in-game information, game information, user information, location information, user device identification information, game-related information, or game-playing apparatus identification information.

In some embodiments, the game-playing transaction comprises at least one of a gaming transaction, a game purchase transaction, a pre-game transaction, a post-game transaction, an in-game transaction, a game-related transaction, a location determining transaction, a user device identifying transaction, or a game-playing apparatus identifying transaction.

In some embodiments, the location comprises or is determined based on global positioning system (GPS) coordinates of the user device or the game-playing apparatus, or location information or identification information of the game-playing apparatus or the user device.

In some embodiments, the user device comprises a mobile computing device.

In some embodiments, the user device comprises a mobile phone.

In some embodiments, the user device comprises a mobile device, and wherein the game-playing apparatus comprises a remote computing apparatus.

In some embodiments, the information associated with the game-playing transaction is received or sent on the first communication interface.

In some embodiments, the user device comprises a mobile device, and wherein the game-playing apparatus comprises a remote computing apparatus.

In some embodiments, the user device comprises a fuel pump, and wherein the game-playing apparatus comprises a remote server.

In some embodiments, the user device comprises a mobile device, and wherein the game-playing apparatus comprises a local computing apparatus.

In some embodiments, the information associated with the game-playing transaction is received or sent on the first communication interface.

In some embodiments, the information associated with the game-playing transaction is received or sent on the second communication interface.

In some embodiments, the second communication interface is located between the user device and game-playing apparatus.

In some embodiments, the second communication interface is located between the game-playing apparatus and a remote computing apparatus.

In some embodiments, the first communication interface is located between the user device and the game-playing apparatus.

In some embodiments, the second communication interface is located between the user device and the game-playing apparatus.

In some embodiments, the game-playing apparatus comprises a gaming facilitator.

In some embodiments, the game-playing facilitator comprises a firewall, logging security, core logic, and transaction logic.

In some embodiments, the game-playing apparatus comprises a communications exchange server.

In some embodiments, the game comprises a lottery game.

In some embodiments, the game comprises a non-lottery game.

In some embodiments, the game-playing transaction was conducted between the user device and the game-playing apparatus.

In some embodiments, the user device is integrated with a fuel pump.

In some embodiments, the processing the game-playing transaction or enabling initiation or conduction of the game-playing transaction is based on determining the user device or the game-playing apparatus is located in the approved location associated with the game based on cross-referencing second location information or identification information, and determining the location matches the second location information or identification information.

In some embodiments, the processing the game-playing transaction or enabling initiation or conduction of the game-playing transaction is based on determining a period of validity associated with the information has not expired.

In some embodiments, the location information comprises a parameter, and the second location information comprises a second parameter.

In some embodiments, the receiving or sending information is executed before the game-playing transaction between the user device and the game-playing apparatus.

In some embodiments, the receiving or sending information is executed after the game-playing transaction between the user device and the game-playing apparatus.

In some embodiments, the receiving or sending information is executed substantially simultaneously with the game-playing transaction between the user device and the game-playing apparatus.

In some embodiments, the determining the user device or the game-playing apparatus is located in the approved location associated with the game comprises cross-referencing the second location information or identification information, and determining the location matches the second location information or identification information.

In some embodiments, the first communication interface comprises at least one of a Bluetooth interface, a near-field communication (NFC) interface, a code-based interface, a Wi-Fi interface, or a cellular interface.

In some embodiments, the first communication interface and the second communication interface are the same communication interface.

In some embodiments, the location is determined based on global positioning system (GPS) coordinates of the device.

In some embodiments, the user device comprises a non-electronic user device or wherein the game-playing apparatus comprises a non-electronic game-playing apparatus.

In some embodiments, the user device or the game-playing apparatus comprises at least one of a pump, an ATM, a servicing station, a retail station, a local computing apparatus, or a remote computing apparatus.

In some embodiments, the user device or the game-playing apparatus comprises a local computing apparatus and a remote computing apparatus.

In some embodiments, the user device comprises a local computing apparatus and a remote computing apparatus.

In some embodiments, the game-playing apparatus comprises a local computing apparatus and a remote computing apparatus.

In some embodiments, the receiving or sending information comprises receiving or sending information between a second user device and the game-playing apparatus.

In some embodiments, the local computing apparatus comprises a retail station.

In some embodiments, a method is provided for processing game-playing transactions. The method comprises: receiving or sending information associated with a game-playing transaction conducted or to be conducted between a user device and a game-playing apparatus, wherein the game-playing transaction is associated with a game, wherein the game is associated with or comprises second information; determining a location of the user device or the game-playing apparatus associated with the game-playing transaction; determining the user device or the game-playing apparatus is located in an approved location associated with the game; processing a game-playing transaction or enabling initiation or conduction of the game-playing transaction based on at least one of: determining the user device or the game-playing apparatus is located in the approved location associated with the game based on cross-referencing second location information or identification information, and determining the location is consistent with the second location information or identification information, or determining a period of validity associated with the information or the second information has not expired, wherein the game-playing transaction is conducted or is to be conducted on a first communication interface, and wherein the information associated with the game-playing transaction is received or sent on the first communication interface or a second communication interface.

In some embodiments, a method is provided for processing game-playing transactions. The method comprises: receiving or sending information associated with a game-playing transaction conducted or to be conducted between a user device and a game-playing apparatus, wherein the game-playing transaction is associated with a game, wherein the game is associated with or comprises second information; determining a location of the user device or the game-playing apparatus associated with the game-playing transaction; processing a game-playing transaction or enabling initiation or conduction of the game-playing transaction based on at least one of: determining the user device or the game-playing apparatus is located in the approved location associated with the game based on cross-referencing second location information or identification information, and determining the location is consistent with the second location information or identification information, or determining a period of validity associated with the information or the second information has not expired, wherein the game-playing transaction is conducted or is to be conducted on a first communication interface, and wherein the information associated with the game-playing transaction is received or sent on the first communication interface or a second communication interface.

In some embodiments, the location is consistent with the second location information or identification information when the location matches the second location information or identification information.

In some embodiments, a method is provided for processing game-playing transactions. The method comprises: receiving or sending information associated with a game-playing transaction between a user device and a game-playing apparatus, wherein the game-playing transaction is associated with a game, wherein the game is associated with or comprises second information; determining a location of the user device or the game-playing apparatus associated with the game-playing transaction; determining the user device or the game-playing apparatus is located in an approved location associated with the game; modifying or configuring the user device or the game-playing apparatus based on the user device or the game-playing apparatus being located in the approved location associated with the game; processing a game-playing transaction or enabling initiation or conduction of the game-playing transaction based on at least one of: determining the user device or the game-playing apparatus is located in the approved location associated with the game based on cross-referencing second location information or identification information, and determining the location is consistent with the second location information or identification information, or determining information associated with the location meets third information (e.g., parameter information), or determining a period of validity associated with the information or the second information has not expired, wherein the game-playing transaction is conducted or is to be conducted on a first communication interface, and wherein the information associated with the game-playing transaction is received or sent on the first communication interface or a second communication interface.

In some embodiments, modifying or configuring the user device or the game-playing apparatus comprises modifying or configuring a user interface of the user device or the game-playing apparatus.

In some embodiments, modifying or configuring the user device or the game-playing apparatus comprises modifying or configuring a hardware element of the user device or the game-playing apparatus.

In some embodiments, modifying or configuring the user device or the game-playing apparatus comprises modifying or configuring a software element of the user device or the game-playing apparatus.

In some embodiments, a method for processing game-playing transactions is provided. The method comprises: receiving or sending information associated with a game-playing transaction between a user device and a game-playing apparatus, wherein the game-playing transaction is associated with a game, wherein the game is associated with or comprises second information; determining a location of the user device or the game-playing apparatus associated with the game-playing transaction; determining the user device or the game-playing apparatus is located in an approved location associated with the game; modifying or configuring the user device or the game-playing apparatus based on the user device or the game-playing apparatus being located in the approved location associated with the game, and based on at least one of: determining the user device or the game-playing apparatus is located in the approved location associated with the game based on cross-referencing second location information or identification information, and determining the location is consistent with the second location information or identification information, or determining a period of validity associated with the information or the second information has not expired, wherein the game-playing transaction is conducted or is to be conducted on a first communication interface, and wherein the information associated with the game-playing transaction is received or sent on the first communication interface or a second communication interface.

In some embodiments, an apparatus is provided for processing game-playing transactions. The apparatus comprises a computing device processor configured for: receiving or sending information associated with a game-playing transaction conducted or to be conducted between a user device and a game-playing apparatus, wherein the game-playing transaction is associated with a game, wherein the game is associated with or comprises second information; determining a location of the user device or the game-playing apparatus associated with the game-playing transaction;

determining the user device or the game-playing apparatus is located in an approved location associated with the game; processing a game-playing transaction or enabling initiation or conduction of the game-playing transaction based on at least one of: determining the user device or the game-playing apparatus is located in the approved location associated with the game based on cross-referencing second location information or identification information, and determining the location is consistent with the second location information or identification information, or determining a period of validity associated with the information or the second information has not expired, wherein the game-playing transaction is conducted or is to be conducted on a first communication interface, and wherein the information associated with the game-playing transaction is received or sent on the first communication interface or a second communication interface.

In some embodiments, the user device or the game-playing apparatus comprises at least one of a pump, an ATM, a servicing station, a retail station, a local computing apparatus, a remote computing apparatus, or the apparatus.

In some embodiments, the apparatus comprises at least one of a pump, an ATM, a servicing station, a retail station, a local computing apparatus, a remote computing apparatus, a user device, or the game-playing apparatus.

In some embodiments, the apparatus comprises or is comprised in a gaming facilitator.

In some embodiments, the apparatus comprises or is comprised in a customized gaming facilitator.

In some embodiments, the apparatus comprises or is comprised in a communications exchange server.

In some embodiments, an apparatus is provided for processing game-playing transactions. The apparatus comprises a computing device processor configured for: receiving or sending information associated with a game-playing transaction between a user device and a game-playing apparatus, wherein the game-playing transaction is associated with a game, wherein the game is associated with or comprises second information; determining a location of the user device or the game-playing apparatus associated with the game-playing transaction; determining the user device or the game-playing apparatus is located in an approved location associated with the game; modifying or configuring the user device or the game-playing apparatus based on the user device or the game-playing apparatus being located in the approved location associated with the game, and based on at least one of: determining the user device or the game-playing apparatus is located in the approved location associated with the game based on cross-referencing second location information or identification information, and determining the location is consistent with the second location information or identification information, or determining a period of validity associated with the information or the second information has not expired, wherein the game-playing transaction is conducted or is to be conducted on a first communication interface, and wherein the information associated with the game-playing transaction is received or sent on the first communication interface or a second communication interface.

In some embodiments, a fuel pump is provided for processing game-playing transactions. The fuel pump comprises a computing device processor associated configured for: receiving or sending information associated with a game-playing transaction between a user device and a game-playing apparatus, wherein the game-playing transaction is associated with a game; determining a location of the user device or the game-playing apparatus associated with the game-playing transaction; determining the user device or the game-playing apparatus is located in an approved location associated with the game; processing a game-playing transaction or enabling initiation or conduction of the game-playing transaction based on at least one of: determining the user device or the game-playing apparatus is located in the approved location associated with the game based on cross-referencing second location information or identification information, and determining the location is consistent with the second location information or identification information, or determining a period of validity associated with the information has not expired, wherein the game-playing transaction is conducted or is to be conducted on a first communication interface, and wherein the information associated with the game-playing transaction is received or sent on the first communication interface or a second communication interface.

In some embodiments, processing a game-playing transaction or enabling initiation or conduction of the game-playing transaction is further based on verifying or validating an identity (e.g., name, age, other identification information) associated with a user of the user device or game-playing apparatus. The identity of the user may be verified or validated using any method, including the method described in U.S. application Ser. No. 14/856,421, filed Sep. 16, 2015, published as US 2017/0076293.

U.S. application Ser. No. 15/614,490, filed Jun. 5, 2017, issued as U.S. Pat. No. 9,824,340 on Nov. 21, 2017, which is incorporated by reference herein in its entirety, is a continuation-in-part of, and claims priority to, U.S. patent application Ser. No. 14/856,421, filed Sep. 16, 2015, the disclosure of which is hereby incorporated by reference in its entirety for all purposes. The present application is also a non-provisional of and claims benefit of U.S. Provisional Application No. 62/458,457, filed on Feb. 13, 2017, the disclosure of which is incorporated by reference in its entirety for all purposes.

The application also incorporates by reference the entirety of U.S. application Ser. No. 15/818,603, filed Nov. 20, 2017, which is a continuation of, and claims priority to, the present application, which, in turn, is a continuation-in-part of, and claims priority to, U.S. application Ser. No. 15/614,490, filed Jun. 05, 2017, issued as U.S. Pat. No. 9,824,340 on Nov. 21, 2017, which is a continuation-in-part of, and claims priority to, U.S. patent application Ser. No. 14/958,720 filed on Dec. 03, 2015, issued as U.S. Pat. No. 9,672,697 on Jun. 6, 2017, which is a continuation-in-part of, and claims priority to, U.S. patent application Ser. No. 14/018,276 filed on Sep. 4, 2013, issued as U.S. Pat. No. 9,227,136 on Jan. 5, 2016, which claims priority to U.S. Provisional Patent Application No. 61/696,533 filed on Sep. 4, 2012, all the disclosures of which are hereby incorporated by reference in their entirety for all purposes.

The application also incorporates by reference the entirety of U.S. application Ser. No. 15/818,041, filed Nov. 20, 2017, which is a continuation of, and claims priority to U.S. patent application Ser. No. 15/614,486, filed Jun. 5, 2017, issued as U.S. Pat. No. 9,824,530 on Nov. 21, 2017, which is a continuation of, and claims priority to, U.S. patent application Ser. No. 14/958,715 filed on Dec. 3, 2015, issued as U.S. Pat. No. 9,672,687 on Jun. 6, 2017, which is a continuation of, and claims priority to, U.S. patent application Ser. No. 14/018,276 filed on Sep. 4, 2013, issued as U.S. Pat. No. 9,227,136 on Jan. 5, 2016, which claims priority to U.S. Provisional Patent Application No. 61/696,533 filed on Sep. 4, 2012, all the disclosures of which are hereby incorporated by reference in their entirety for all purposes.

The present application incorporates-by-reference the entirety of U.S. application Ser. No. 13/757,512, filed Feb. 1, 2013, published as US 2013/0196733, titled "Systems and Methods for Integrated Game Play Through the Use of Proximity-Based Communication on Smart Phones and Hand Held Devices," for all purposes.

The present application incorporates-by-reference the entirety of U.S. Application No. 61/593,762, filed Feb. 1, 2012, titled "Systems and Methods for Integrated Game Play and Sales of State Sponsored Lottery Products Through the Use of Near Field Communication on Smart Phones and Hand Held Devices," for all purposes.

The present application incorporates-by-reference the entirety of U.S. application Ser. No. 14/856,421, filed Sep. 16, 2015, published as US 2017/0076293, titled "Creating, verification, and integration of a digital identification on a mobile device" for all purposes.

The present application incorporates-by-reference the entirety of U.S. application Ser. No. 13/842,709, filed Mar. 15, 2013, published as US 2014/0274314, titled "Systems and Methods for Integrated Game Play at Payment-Enabled Terminals," for all purposes. The present application incorporates-by-reference the entirety of PCT/US14/22877, filed Mar. 10, 2014, titled "Systems and Methods for Integrated Game Play at Payment-Enabled Terminals," for all purposes.

The present application incorporates-by-reference the entirety of U.S. application Ser. No. 15/055,866, filed Feb. 29, 2016, titled "Validating a Short-Range Mobile Device Transaction Using a Long-Range Mobile Device Transaction," for all purposes.

The present application incorporates-by-reference the entirety of U.S. application Ser. No. 13/280,196, filed Oct. 24, 2011, published as US 2012/0244930, titled "Game Play System for Automated Terminals," for all purposes. U.S. application Ser. No. 13/280,196 claim priority to U.S. application Ser. No. 11/734,207, filed Apr. 11, 2007, titled "Systems and Methods for Providing Lottery Game Play Through an Unmanned Terminal," which claims priority to U.S. Application No. 60/886,818, filed Jan. 26, 2007, titled "Systems and Methods for Integrating ATM and Lottery Functions," all of which are incorporated by reference in their entirety for all purposes.

The present application incorporates-by-reference the entirety of PCT/US12/61744, filed Oct. 24, 2012, titled "Game Play System for Automated Terminals," for all purposes. The present application incorporates-by-reference the entirety of U.S. application Ser. No. 13/839,558, filed Mar. 15, 2013, titled "Game Play System for Automated Terminals," for all purposes.

The present application incorporates-by-reference the entirety of U.S. application Ser. No. 13/829,776, filed Mar. 14, 2013, titled "Systems and Methods for Providing Lottery Game Play Through an Unmanned Terminal," for all purposes. The present application incorporates-by-reference the entirety of U.S. application Ser. No. 13/839,469, filed Mar. 15, 2013, titled "Systems and Methods for Providing Lottery Game Play Through an Unmanned Terminal," for all purposes. The present application incorporates-by-reference the entirety of PCT/US08/51955, filed Jan. 24, 2008, titled "Systems and Methods for Providing Lottery Game Play Through an Unmanned Terminal," for all purposes.

In general, the present disclosure relates to gaming provider system and method of operation thereof. The gaming provider system of this disclosure will be described in conjunction with one or more example embodiments. However, the specific example embodiments disclosed are merely provided to describe the inventive concepts, features, advantages and objectives will sufficient clarity to permit those skilled in this art to understand and practice the disclosure. Any part of this disclosure may be used in combination with any other part of this disclosure.

In some embodiments, any game described herein may be an augmented or virtual reality game. In some embodiments, any game described herein may additionally be a video game.

In some embodiments, a user obtains (e.g., purchases) a game-playing card (e.g., a lottery game card) at a retail store, kiosk, etc. The place of purchase may be a physical or electronic store. At a retail checkout terminal (or any other local computing apparatus), an operator or the user may swipe or otherwise transmit information associated with the gaming card to a remote computing apparatus (e.g., a backend server). The information associated with the game-playing card may be transmitted as a data packet. For example, the retail checkout terminal may extract information from the code (e.g., a barcode) of the card, and transmit the extracted information to the remote computing apparatus (e.g., backend server). In other embodiments, the information associated with the code is transmitted from the retail checkout terminal to the remote computing apparatus, and the remote computing apparatus extracts unique identification information associated with the card. The data packet transmitted from the retail checkout terminal may additionally include identification or location information associated with the location or identity of the retail checkout terminal (e.g., store identification information, terminal identification information, network identification information, merchant information, location information, etc.). In some embodiments, this information may be embedded into the card itself. This information may be cross-referenced or compared to approved identification or location information to determine whether the two quantities are consistent with or correspond to (e.g., match) each other (or are mappable to each other). If yes, this means that the data packet (i.e., the data packet received at the remote computing apparatus) is received from an approved location (i.e., an approved retail store or terminal) associated with the game associated with the card.

The scratch off code (or alphanumeric indicia which has to be scratched off to be visible) as described herein has a one-to-one relationship with unique identification information of the card, which may be a unique number (e.g., PAN number) associated with the card. When the scratch-off code is received by the backend server, which may be associated with any network described herein, the backend server searches for the unique identification information associated with the received scratch off code. The backend server proceeds to associate the phone number (and/or other mobile device identification information associated with the mobile device that sent the scratch off code such as the mobile device make, model, user, location, operation system, etc., from which the scratch off code is received, etc.) with at least one of the unique identification information of the card or the scratch off code of the card.

There may be a one-to-many relationship between mobile device identification information and card identification information because a single mobile device may be associated with one or more game-playing cards associated with one or more gaming partners and/or one or more games and/or one or more approved jurisdictions associated with the games.

Assume a user has exhausted funds on a particular gaming card (e.g., the user has played all games on a particular card).

The user now reloads a card at the retail checkout terminal or via any other reloading mechanism (e.g., including via a mobile device). The reloading process may comprise swiping the card at the retail checkout terminal or any other transaction mechanism (e.g., a short-range or long-range wireless transaction) between the card and the a computing apparatus such as the retail checkout terminal. The reloading process may include a financial transaction similar to the transaction when the card was initially purchased. A data packet comprising the unique identification information of the card is transmitted to the remote computing apparatus (i.e., the backend server). The backend server identifies or finds the mobile device information (e.g., phone number or any other information described herein) associated with the unique card identification information. The backend server facilitates automatically obtaining a ticket (e.g., automatically purchasing a ticket) from a gaming partner associated with the card, and transmits a ticket associated with the card electronically to the mobile device via any messaging mechanisms described herein.

In some embodiments, one or more elements of any embodiments described herein (e.g., such as messaging features) may be realized using a mobile application. In some embodiments, the reloading of a card may be processed or approved at any retailer (or any retail checkout terminal) in an approved jurisdiction associated with the card or associated with the game associated with the card. In some embodiments, the reloading of a card approved for games in a particular jurisdiction may need to occur in that jurisdiction. In other embodiments, the reloading of a card approved for games in a particular jurisdiction may occur outside that jurisdiction.

In some embodiments, any game-playing card described herein may not have an expiry date. In such embodiments, any funds on a card may be used (e.g., automatically by the backend server) to obtain (e.g., purchase) a ticket (or multiple tickets) for the next draw associated with the game associated with the card. In some embodiments, the backend server obtains a single ticket for each draw. In other embodiments, a user of the card may have control over which draw and/or games to participate in using excess or remaining funds on the card. In some embodiments, a period of validity may be associated with a game-playing transaction or game information or any other information described herein.

Some embodiments provide a gaming provider system that can include a gaming facilitator in communication with a network and may include application logic operable to execute a gaming transaction. One or more lottery gift cards can be issued by the gaming provider and each may include a universal product code for barcode scanning for purchase by a user at a retail store. The gaming facilitator can include a card issuing system for tracking purchases and gaming transactions associated with the one or more lottery gift cards. The gaming facilitator can be in communication with at least one mobile device associated with the user through the network for commencing the gaming transaction. The gaming facilitator may be in communication with a gaming system of a jurisdiction for generating the gaming transaction and with a third party payment provider for providing payment to the user. The one or more lottery gift cards can identify at least one lottery game and have a card number and a unique scratch off code and are reusable by the user to initiate the gaming transaction. The one or more lottery gift cards can also each include a short code for entry by the user using the at least one mobile device to initiate a messaging session (e.g., a text messaging session or other messaging session such as through a mobile application) with the gaming facilitator. The unique scratch off code can be unique across all lottery jurisdictions and have one or more characters for entry by the user using the at least one mobile device during the text messaging session. As used herein, a text message may refer to any kind of message, including mobile application messages, etc.

In some embodiments, the gaming facilitator can be configured to log a purchase of the one or more lottery gift cards at the retail store for providing a commission to the retail store and initiate the gaming transaction through the gaming system in response to the user entering the short code in the at least one mobile device. Additionally, the gaming facilitator can be configured to commence a text messaging session with the at least one mobile device, communicate with the at least one mobile device using the text messaging session, and receive the scratch off code as a first user text message during the text messaging session. The gaming facilitator can then be configured to communicate with the gaming system to receive at least one lottery number set generated by the gaming system and transmit a first gaming facilitator text message including the at least one lottery number set to the at least one mobile device in the text messaging session.

In some embodiments, the gaming facilitator can be configured to determine if the at least one lottery number set is a winning lottery number set and determine if the winning lottery number set qualifies as a low tier win or a high tier win. Then, the gaming facilitator can be configured to transmit a second gaming facilitator text message including a notification of winning and a winning link having one or more payment options to the at least one mobile device in response to the at least one lottery number set being the winning lottery number set. The gaming facilitator may also be configured to provide instructions to the user using the text messaging session for payment in response to the winning lottery number set qualifying as the high tier win. The gaming facilitator can be configured to confirm an identity of the user in response to the winning lottery number set qualifying as the low tier win in response to the user utilizing the winning link and initiate payment to the user through the third party payment provider in response to confirmation of the identity of the user.

As best shown in FIG. **12**, a gaming provider system **20** can include a gaming facilitator **22** in communication with a network and may include application logic operable to execute a gaming transaction. The gaming facilitator **22** may include one or more software-customized processors. The gaming facilitator **22** can be in communication with at least one mobile device **24** (e.g., Android® phone, iPhone®, etc.) associated with a user **26** through the network for commencing the gaming transaction. The gaming facilitator **22** may also be in communication with a gaming system **28** of a jurisdiction (and/or of a particular gaming company or partner) for generating the gaming transaction and with a third party payment provider **30** (e.g., PayPal®) for providing payment to the user **26**. Alternatively, payment can be provided through automated clearing house (ACH) transfers.

One or more lottery gift cards **32** can be issued by the gaming facilitator **22** and each may include a universal product code (UPC) for barcode scanning (e.g., by a terminal at a retail store) for purchase by the user **26** at a retail store. Any code as described herein may also be referred to as indicia, which can be visual or non-visual indicia. The terminal may be a manned or unmanned checkout station. In some embodiments, the gift card may include another mechanism (e.g., RFID, NFC, Bluetooth, Bluetooth Low

Energy, Infrared, cellular, WiFi, etc.) for transmitting the information on the card. In some embodiments, the card may be a physical card. In other embodiments, the card may be an electronic card stored on a mobile device such as a mobile phone, watch, or other mobile or portable computing device. Specifically, the lottery gift cards **32** may be purchased at participating (lottery-enabled) retail stores, known as distribution partners or at point of sale (POS) terminals using any form of payment allowed by the jurisdiction in which the sale takes place (some jurisdictions do not allow credit card payment for lottery games). In some embodiments, the cards may be purchased over the Internet using a computing device such as a mobile computing device. In some embodiments, any payment for any game or card described herein may be an electronic payment using cryptocurrency. The gaming facilitator **22** can include or be associated with a card issuing system (e.g., utilizing a database) for tracking purchases and gaming transactions associated with the one or more lottery gift cards **32**. The one or more lottery gift cards **32** can identify at least one lottery game (e.g., on the face of a card) and have a card number **34** (or other card identification information) and are reusable by the user **26** to initiate gaming transactions. After their initial use, value may be added to the lottery gift cards **32** at a retail store, kiosk, or via a mobile device, in order to play future lottery games (i.e., the lottery gift cards **32** are rechargeable). Any mechanism (e.g., swiping, short-range wireless transaction, etc.) used for purchase of the card can be used to reload the card. In some embodiments, users **26** or players can reuse the card multiple times (no limit) across all participating jurisdictions associated with a particular game.

In some embodiments, players may not reload lottery gift cards **32** that have not been played if the reload attempt is within a jurisdiction that is different from the one in which the lottery gift card **32** was purchased and activated. In other embodiments, players may reload gift cards **32** in any jurisdiction, regardless of whether it is the same or different from the jurisdiction where the lottery gift card **32** was purchased and activated. Additional requirements may specify what happens when a reload is delayed at a computing terminal (e.g., POS terminal, mobile terminal, etc.) due to draw breaks, off sale times, and system issues (outages). In all of these scenarios, the reload attempt (lottery purchase attempt) may be retried (e.g., automatically) at the next available open window unless the reload attempt has been previously canceled by the user. In some embodiments, four different lottery gift cards **32** (four different UPCs) may be used to enable the user **26** to play three or five plays for the Powerball® lottery ($6 card value and $10 card value, respectively) or five or ten plays of the Mega Millions® lottery ($5 card value and $10 card value). The lottery gift cards **32** may also display other items such as, but not limited to terms and conditions and instructions for how to play.

The lottery gift card **32** becomes activated once the payment is processed. Specifically, the activation goes from the POS terminal to the network of the gaming facilitator **22**. The activation process completes within seconds after the payment is processed; however, the activation of the purchased lottery gift card **32** does trigger the purchase of the corresponding lottery game. Thus, the lottery gift card **32** may be used at a later time or given as a gift to another person. The lottery gift card **32** may include one or more games, each game may be associated with one or more same or different gaming partners or providers. In some embodiments, each game may be associated with one or more jurisdictions. In some embodiments, all games on a lottery card are associated with a single gaming partner and/or a single jurisdiction.

As best shown in FIG. **13**, the one or more lottery gift cards **32** each can include a unique scratch off code **38** and can also each include a short code **40** (e.g., 26370) for entry by the user **26** using the at least one mobile device **24** to initiate a text messaging session **42** with the gaming facilitator **22**. The unique scratch off code **38** can be unique across all lottery jurisdictions and have one or more characters (e.g., eight alphabetic characters) for entry by the user **26** using the at least one mobile device **24** during the text messaging session **42**. So, the user **26** can text the scratch off code **38** to the short code **40**. In some embodiments, the scratch off code may be some other visual or non-visual indicia stored on the card. In some embodiments, the scratch off code may be input to the mobile device via some other input mechanism (e.g., capturing an image of the code, or some other wireless communication mechanism described in this disclosure). In some embodiments, the short code may be some other visual or non-visual indicia stored on the card. In some embodiments, the scratch off code may be communicated to the short code via any communication mechanism (e.g., cellular, WiFi, Bluetooth Low Energy, RFID, NFC, or another wireless communication mechanism described herein). Any wireless communication mechanism or process described herein may additionally or alternatively be performed via a wired communication mechanism or process. In some embodiments, any lottery card described herein may refer to any card, whether associated with a lottery game or some other game.

The gaming facilitator **22** can be configured to log a purchase (e.g., details of the lottery card, user buying the lottery card, etc.) of the one or more lottery gift cards **32** at the retail store for providing a commission to the retail store and initiate the gaming transaction through the gaming system **28** in response to the user **26** entering the short code **40** in the at least one mobile device **24**. Additionally, the gaming facilitator **22** can be configured to commence or participate in a text messaging session **42** (FIGS. **13-15**) with the at least one mobile device **24**, communicate with the at least one mobile device **24** using the text messaging session **42**, and receive the scratch off code **38** as a first user text message **44** during the text messaging session **42**. The gaming facilitator **22** can then be configured to communicate with the gaming system **28** (or any other system) to receive at least one lottery number set (i.e., board) generated by the gaming system **28** and transmit a first gaming facilitator text message **46** including the at least one lottery number set to the at least one mobile device **24** in the text messaging session **42**. Any text messaging session described herein may alternatively be any information sending and/or receiving session.

Additionally, the gaming facilitator **22** can be configured to determine if the at least one lottery number set is a winning lottery number set and determine if the winning lottery number set qualifies as a low tier win or a high tier win ("low tier" for smaller jackpots and "high tier" for larger jackpots). Then, the gaming facilitator **22** can be configured to transmit a second gaming facilitator text message **48** including a notification of winning and a winning link **50** (e.g., hypertext link to a secure website that employs the secure Hypertext Transfer Protocol, for instance) having one or more payment options to the at least one mobile device **24** in response to the at least one lottery number set being the winning lottery number set (FIG. **15**). The gaming facilitator **22** may also be configured to provide instructions **36** to the

user **26** for payment in response to the winning lottery number set qualifying as the high tier win (FIG. **18**). The gaming facilitator **22** can be configured to confirm an identity of the user **26** in response to the winning lottery number set qualifying as the low tier win in response to the user **26** utilizing the winning link **50** (FIG. **15**) and initiate payment to the user **26** through the third party payment provider **30** in response to confirmation of the identity of the user **26** (FIG. **16**). In the event that payment is provided through an ACH transfer, an ACH data entry page can be provided on the website that allows the user **26** to enter their preferred ACH account information: Full Name, Routing number, Account number, Bank Name. This information can then be validated and a confirmation can be sent to the user **26** (e.g., text message).

The user's identity may be confirmed through any identification mechanism described herein. In some embodiments, the user may enter a code. In some embodiments, the user may provide a photo of any body part of the user such as the user's face. In some embodiments, the user may provide a fingerprint. The user's identity may be confirmed by comparing or cross-referencing the user provided information to information comprised in an identification database.

Referring now to FIG. **8**, a method for providing a gaming transaction using a gaming provider system **20** is also disclosed. The method can include the step of providing one or more lottery gift cards **32** having a universal product code and a card number **34** and a short code **40** and a scratch off code **38** for purchase at a retail store by a user **26**. The method can continue by verifying the age of the user **26** intending to purchase the one or more lottery gift cards **32** at the retail store. Such age verification may be carried out just as is done for alcohol purchases (i.e., a store clerk checks the driver's license or other ID to confirm the age of the user **26**). It should be appreciated that other age verification steps may be used in addition to or in place of age verification by the store clerk, such as, but not limited to a later exchange of additional text messages to confirm the age of the user **26** once the lottery gift card **32** has been purchased. In some embodiments, age verification of the user may be performed as part of identification verification of the user. The method can proceed with the steps of receiving a notice (e.g., at the mobile device or the POS terminal) of a purchase of the one or more lottery gift cards **32** at the retail store at a gaming facilitator **22** in response to the universal product code being scanned at the retail store and logging the purchase of the one or more lottery gift cards **32** at the gaming facilitator **22** to provide a commission to the retail store. More specifically, the gaming facilitator **22** can digitally record all transactions of lottery gift cards **32** and provide reporting of the transactions to the appropriate retail stores or retailers by brand, location, or partner or to the gaming partners by game type, location, or retail store. In addition, the gaming facilitator **22** can also provide a real time journal file to the appropriate lottery security group or lottery internal control system. The gaming facilitator **22** may also manage settlement of funds to the appropriate lottery or gaming partner for these transactions.

Next, the method can include the step of commencing or conducting a text messaging session **42** (or other information sending and/or receiving session) with at least one mobile device **24** in response to the user **26** entering the short code **40** in the at least one mobile device **24**. Then, the method can continue by initiating a gaming transaction through a gaming system **28** in communication with the gaming facilitator **22** and communicating with the at least one mobile device **24** using the text messaging session **42**. When such a play request is received for a lottery gift card **32**, all outstanding plays will be played in the jurisdiction where the monies were received for those transactions. So, for example, if the lottery gift card **32** was purchased in North Carolina and then played in California, the North Carolina lottery will be played. The method can continue with the steps of receiving a scratch off code **38** as a first user text message **44** during the text messaging session **42** and marrying the card number (or other identification information) of the at least one lottery gift card **32** to a phone number of the mobile device **24**. Thus, once the lottery gift card **32** is associated with the phone number of the mobile device **24**, the user **26** may make future plays without any additional registration or verification.

On a subsequent play after reloading the card, if the user **26** sends the scratch off code **38** to the short code **40** using a different mobile number than the initial play, then the user **26** may receive an error text message (e.g., "This card has already been played. To view the numbers for this play, you need to send the scratch off code from the mobile device **24** that was used to play the first time."). Similar error messages can be provided if the user **26** sends the scratch off code **38** multiple times without reloading the lottery gift card **32**. In some embodiments, the user may make subsequent plays using the same scratch off code but a different mobile number. In such embodiments, multiple mobile numbers (or other user identification information) will be associated with the card number (or other card identification information).

The method can continue with the step of communicating with the gaming system **28** to receive at least one lottery number set generated by the gaming system **28**. If user **26** sends an incorrect, duplicate, or inactive scratch off code **38**, they can receive an error message (e.g., "Your play cannot be completed at this time. Please call 1-855-###-#### for further assistance."). Similarly, if a play attempt fails because the request was made during a draw break or game is off sale, the user **26** can be sent a text message with another error message (e.g., "Sorry, lottery is off sale right now. We will send your numbers when lottery is on sale again."). Once the lottery goes on sale again, user **26** receives play success message with played numbers. Next, the method can include the step of transmitting a first gaming facilitator text message **46** including the at least one lottery number set to the at least one mobile device **24** in the text messaging session **42**. Then, the method can include the step of maintaining a record of historical plays including the at least lottery number set for each gaming transaction previously completed. If the user **26** sends "VIEW" to the short code **40**, and has already played they can receive a text message to indicate that the numbers will be resent (e.g., "This card has already been played. Your numbers will be resent below.") along with their played numbers. Likewise, if the user **26** sends "VIEW" to the short code **40**, and have not yet played they should receive a text message requesting that they send the scratch off code **38** (e.g., "Send the scratch off code from the back of your Lottery Card to play and view your numbers!"). The user **26** can text similar commands to the short code **40**, such as, but not limited to "STOP" to stop receiving any associated marketing text messages, or "HELP" to receive instructions on how to play or access the website. The gaming facilitator **22** records all transactions and provides reporting of transactions to the appropriate lottery authority or gaming system **28** by jurisdiction.

The method may then continue by determining if the at least one lottery number set is a winning lottery number set and determining if the winning lottery number set qualifies

as a low tier win or a high tier win. The method may then include the step of transmitting a second gaming facilitator text message **48** including a notification of winning and a winning link **50** (e.g., hypertext link to the website) having one or more payment options to the at least one mobile device **24** in response to the at least one lottery number set being the winning lottery number set. Notifications may even be sent for some other event, such as when the user **26** does not win (e.g., a message from the retail store saying "better luck next time, but here's a 10% digital coupon to our store") or notifications when the lottery jackpot becomes large. The method can then proceed by providing instructions **36** (e.g., using a hypertext link the website) to the user **26** for payment in response to the winning lottery number set qualifying as the high tier win. The user **26** may also send "REDEEM" to the short code **40**, and then they can receive a text message concerning their winnings (e.g., "lotterycard-website.com to view your Winnings and choose how to get paid if you win"). The method may also include the step of confirming an identity of the user **26** in response to the winning lottery number set qualifying as the low tier win or high tier win in response to the user **26** utilizing the winning link **50**. Identification verification may be performed by any technique described herein. The method can conclude with the step of initiating payment to the user **26** through the third party payment provider **30** in response to confirmation of the identity of the user **26** for a low tier win. In some embodiments, the user **26** may be given the option of requesting payment for winning in the form of a retailer gift card that may even have a value greater than what the cash winnings would be (e.g., $7 cash winnings, but can alternatively receive an $8 gift card).

In some embodiments, the user **26** does not have to register to claim high tier winnings, but does need to visit the lottery office. When the user **26** is at the lottery office to redeem their high tier winnings and the lottery clerk can select the "Click here to enter PIN on PIN Pad" button on a tool, the user **26** can be sent a six digit code to their mobile number that was used to play. The user **26** can then enter this six digit code in the tool to verify their identity and proceed with claiming their high tier winnings.

FIG. **28** illustrates some entities that may be involved in a gaming provider system. A user **2801** may purchase a lottery play at a point of sale (POS) **2803**. The user **2801** may purchase a physical lottery card **2813** with an identifying barcode or other card identifying mechanism. The identifying barcode or mechanism may be to record transactions (e.g. in order to avoid repurchase or reactivation of the same lottery card) and/or authorize transactions (e.g. via lookup in a database system associating at least one lottery card **2813** with at least one merchant and/or POS **2803**). Alternatively, the user **2801** may acquire a virtual lottery card **2813** by way of electronic communication (e.g. RFID, NFC, Bluetooth, Bluetooth Low Energy, Infrared, cellular, WiFi, QR code) involving a user device **2811** and a POS **2803**. Alternatively, the electronic communication may involve a user device **2811** while not involving a POS **2803**. Upon purchase, the POS **2803** and/or associated identifying information may be analyzed by a transaction processing and/or authorization network (TPN) **2805** to determine whether or not the POS **2803** and/or its retail location is authorized to sell lottery cards **2813**, e.g. based on geographic location or network membership. The TPN **2805** may further facilitate financial transactions between the POS and a value added network (VAN) **2807**, e.g. by recording POS **2803** activity associated with lottery cards **2803** and/or sending payments between the POS **2803** and VAN **2807**. Upon successful lottery card **2813** purchase and/or POS **2803** approval, the lottery card **2813** may be activated automatically or by submission of associated lottery card **2813** information, e.g. from user device **2811** to the VAN **2807**.

Unique information associated with each lottery card **2813** may be generated and recorded by a value added network (VAN) **2807** and/or card issuer **2815**. Physical lottery cards **2813** may further be printed by a card issuer **2815** for distribution to a POS **2803**. The unique information may include a primary account number (PAN) and/or a scratch code. Upon purchase, the POS **2803** may access a TPN **2805** to authorize the lottery card **2813** purchase based on the unique information, e.g. by cross-referencing location information with a database. In the case of a lottery replay purchase (e.g. using a previously purchased lottery card **2813**) or lottery play stacking (i.e. purchasing multiple plays before exhausting existing play(s) **2813**), historical and/or jurisdictional information may be referenced to authorize the lottery card **2813** purchase, e.g. based on allowable number of replays and/or whether the jurisdiction allows replays from a given geographical location. Additionally, lottery card **2813** and/or user device **2811** activity may be monitored to determine unintended, malfunctioning, or fraudulent behavior (e.g. based on play purchase velocity or geographic location of purchases).

All information associated with the lottery play (e.g. purchase, activation, registration, play, replay, play results, messaging, financial transactions) may be communicated to and recorded by a VAN **2807**. This communication may occur through one or more intermediary entities, such as a POS **2803**, TPN **2805**, card issuer **2815**, user device **2811**, messaging system **2817**, financial system **2819**, and/or lottery system **2809**. The VAN **2807** may utilize the information to inform internal (i.e. within the VAN) or external activities (e.g. lottery system, card issuer) rule-based events.

The user device **2811** may be a cellular and/or Internet-enabled device. The messaging system **2817** may relay text, image, audio, and/or video messages, e.g. via SMS, MMS, or Internet URL. The financial system **2819** may comprise a third party electronic payment system capable of sending ACH transfers or transferring money among accounts within the financial system The lottery system **2809** may comprise a system capable of transmitting game play offerings, transmitting game play purchase prices, receiving requests for one or more game plays, returning results of one or more game plays, receiving payments for game play purchases, and/or sending payments associated with game play results.

In some embodiments, the phone number and/or location information (e.g. from cellular towers, GPS) associated with a user device may be analyzed to determine jurisdictional and/or fraud compliance. In some embodiments, location information associated with a user device and/or lottery card may be analyzed to determine game play offerings and/or promotional offers.

In some embodiments, lottery plays may be transferred from one user device to another user device.

In some embodiments, an event-based system (e.g. based on time or location) may be utilized to determine periods to avoid sending communications to the user device.

In some embodiments, a user may manually select information related to a game play, e.g. a user may select the virtual and/or physical scratch-off locations associated with a scratch-off game as a lottery player might traditionally do with physical lottery tickets. The user may also allow the user device and/or remote system (e.g. VAN, lottery system)

to automatically select and/or generate information related to a game play, e.g. numbers chosen for a board-based lottery game.

In some embodiments, a threshold may be established such that all prizes associated with game play outcomes ("prizes") below the threshold may be automatically sent via a financial system, whereas all prizes above or equal to the threshold may require further verification steps before payment (e.g. user and/or user device verification at a designated physical location).

In some embodiments, an unclaimed prize may expire based on the user, game play jurisdiction, game play geographical location, lottery system associated with the game play, and/or expiration events (e.g. time thresholds).

In some embodiments, a purchase of a game card is initiated by scanning a barcode at a point of sale terminal. In other embodiments, the purchase may be initiated at an unmanned terminal. In some embodiments, the purchase may be initiated by conducting a chip-based transmission of information from the game card to the point of sale terminal. In some embodiments, the game card may be a lottery card. Any gaming card described herein may be a physical card or a digital card. In some embodiments, the purchase may be made directly by a mobile computing device associated with a user. Therefore, in some embodiments, the user's mobile computing device (or non-mobile computing device) may be the POS terminal.

If the first network is not online, the POS terminal may directly send the information (e.g., the scanned information) to the second network. Alternatively or additionally, the POS terminal may send a signal to the first network that causes the first network to resolve any issues and come online. Once the first network comes online, the first network forwards the information to the second network. Once the second network receives the information (e.g., from the first network and/or from the POS terminal), the second network processes the transaction (e.g., the purchase transaction for purchasing the gaming card), and sends a response regarding either successfully or unsuccessfully processing the transaction back to the POS terminal (e.g., either directly to the POS terminal or via the first network). The second network may have access to a database that includes authorized retailer locations (e.g., merchants, entities, geographical locations, network locations, etc.) for selling the gaming card. The location of the purchase may be included in the information transmitted from the POS terminal. If the location is not present in the database, a transaction declined message is transmitted to the POS terminal.

If the location is present in the database, a determination is made (e.g., by the second network) as to whether the gaming card status is generated or disabled. If the gaming card is disabled, a decline message is transmitted to the POS terminal (e.g., directly or via the first network) because the card is disabled. If the gaming card is not disabled, the second network determines whether the card is already activated. If the gaming card is already activated, a decline message is transmitted to the POS terminal (e.g., directly or via the first network) because the card is already activated. If the gaming card is not already activated, the second network determines whether the gaming card has already been played. If the gaming card has been played, a decline message is transmitted to the POS terminal (e.g., directly or via the first network) because the card has already been played.

If the gaming card has not been played and/or if a funds balance to play a game is present, the second network sends an approval message to the first network and/or the POS terminal, wherein the approval message may be displayed on the POS terminal. The second network also sets the PAN card status to activated and sets the card state to active. The second network also records the state-specific (e.g., jurisdiction specific) PAN obligation associated with the card, sets the obligation date, and records purchase details for the record. The card is now registered for play.

The information from the point of sale (POS) terminal is transmitted to a first network. The process flow then moves on to determine whether a first network is online. The first network may be a game card network, a card network, a game network, a first server specifically configured for card-based gaming transactions, etc. If the first network is online, the information from the first network is transmitted to a second server. The second network may be a gaming facilitator network, a communication processing network, a second server specifically configured for gaming transactions such as card-based gaming transactions, etc.

Any features associated with any one figure may be associated with or combined with features of any other figure, even if not illustrated in the figures. Additionally, steps of each figure may be performed in any order that may be the same as or different from the order shown in the figure. Any feature (e.g., any element) may be combined with any other element described or illustrated herein.

FIG. **20** illustrates a system **2000** for mixed mode lottery game play. For example, multiple lottery games and/or types of lottery games may be played on a single user device. A user device may be a mobile phone, a tablet, a personal computer, a wearable device (e.g. fitness tracker, wrist-worn computer), smart jewelry (e.g. ring or necklace), or any electronic device a configured to receive external information with which a user can interact. Any network described herein may include one or more local or remote computing apparatuses such as game-playing apparatuses. Any box in any figure may represent one or more local or remote computing apparatuses, which may be specially configured (e.g., specially purposed processors or hardware, specially purposed or customized software, etc.) for performing specific operations associated with game-playing transactions. Transactions may include financial data.

Lottery cards may be created and distributed to a merchant **2001**. A merchant **2001** may comprise a retail POS terminal, and a lottery card holder **2007** may comprise a user and/or an Internet-enabled user device. A retail POS terminal may be a checkout terminal (e.g. at a grocery store or gas station), a gas pump terminal, or an electronic kiosk (either dedicated for lottery activity or one utilized for other activities, such as movie rental, electronic equipment purchase, or food purchase). Each lottery card may be associated with a unique account number, a unique activation code, a denominated number of game plays, and/or a purchase price. A lottery card may be presented for purchase at a POS. The POS may receive the unique account number and access a TPN **2003** to authorize and complete the purchase of the lottery card, e.g. based on geographic location information of the POS, lottery card, and/or user device. The TPN may further communicate through a lottery card issuer **2005** to inform another system (e.g. a VAN **2009**) of transaction information. The lottery card issuer **2005** may be an entity which generates lottery cards and their associated data for distribution to merchants **2001**. Additionally, a lottery card issuer may be incorporated within the VAN **2009**, or it may not be. Additionally, a lottery card issuer may simply record activity associated with lottery cards (e.g. purchase, activation), but not be involved in generation of lottery card information. After purchase, the lottery card holder may

redeem the game plays via an Internet-enabled device (e.g., a mobile telecommunication device such as a mobile phone) by entering the unique activation code from the lottery card on the device. Alternatively, the game plays may be automatically redeemed upon purchase of the lottery card; in such a scenario, the automatic redemption may require submission of user device information (e.g. phone number or NFC information) in order to transfer the redeemed game play to the user device. The device may transmit the unique activation code and lottery card holder's device identification to the VAN **2009**. The VAN **2009** may comprise an intermediary system for facilitating game play and/or other transactions among a lottery card holder **2007**, merchant **2001**, and lottery system **2011**. The VAN **2009** may receive and validate the unique activation code, register the lottery card's unique account number with the lottery card holder's device ID (which could be a phone number), and request game entries from the lottery system **2011**. The lottery system **2011** may comprise a governmental-run (e.g. state-run) system or government-authorized system, which may define rules, prices, and/or prices of lottery game plays, and which may further facilitate lottery-based transactions (e.g. involving game play or transaction data). The VAN **2009** may receive the game entries and transmit them via a digital lottery ticket to the lottery card holder's device. Upon lottery draw occurrence, the lottery system may transmit results to the VAN **2009**. The VAN **2009** may process the results and transmit a result notification to the device registered to the lottery card. If the digital lottery ticket is a low-tier prize winner, the VAN **2009** may send a prize payment to the lottery card holder's registered device (e.g. without additional verification required). If the digital lottery ticket is a high-tier winner, the VAN may provide instruction via the player's device on how to claim the prize with the lottery system.

FIG. **21** illustrates a verification system and method **2100** for verifying the winner of a digital lottery game play. Such a system and method **2100** may also be advantageous by making the lottery prize redemption process more convenient (e.g. by auto-detect and notify a player) as well as reducing the possibility of lost lottery tickets (e.g. via alternative winner verification methods and/or winner account recovery).

A digital lottery ticket may be issued by a value added network (VAN) **2107** to a lottery player's Internet-enabled device **2111** via two identifying elements: a device identification code (device ID) and a unique account number (PAN). The device ID and/or PAN may be fixed information associated with a player device **2111** and/or lottery card, or they may be mutable information changeable by a lottery player **2103**, a VAN **2107**, a lottery system **2101**, and/or a lottery ticket issuer **2109**. A lottery draw may occur and the lottery player with a digital lottery ticket may win a prize. The player **2103** may present the winning digital lottery ticket to a lottery system **2101** to claim the prize. The player may enter the PAN and/or any other identifying information (e.g., associated with the device, the digital lottery ticket, the user, etc.) on an Internet-enabled verification device **2105**. The Internet-enabled verification device **2105** may have wireless communication abilities (NFC, RFID, WiFi, Bluetooth, cellular, etc.). The PAN and/or other identifying information may be transmitted to a VAN **2107**. The VAN **2107** may analyze the PAN for validation purposes and send a unique prize verification code (PVC) to the device **2111** registered to the PAN. The player may receive the PVC on the registered device **2111** and enter the PVC on the Internet-enabled verification device **2105**. The device **2105** may transmit the PVC entered on the device **2105** to the VAN **2107**, e.g. to close the validation loop. The VAN **2107** may validate the PVC, send a winner verification code (WVC) to the Internet-enabled verification device **2105**, and transmit a verified claim notification to the lottery ticket issuer **2109**. The lottery ticket issuer may proceed by granting the verified user the prize. The lottery ticket issuer **2109** may be incorporated within the lottery system **2101**, or it may not be. The lottery ticket issuer **2109** may be responsible for generating information associated with lottery games and distributing lottery tickets, or it may just be responsible for distribution of lottery tickets based on lottery game information received from another entity (e.g. a lottery system **2101**).

In addition to utilizing a verification device **2105** for "high tier" prize winners, the verification system may enable automatic checking and notification of lottery play results regardless of prize tier. Therefore, the verification system can make the lottery game play process more convenient by not requiring the lottery player to determine the results of a game play (e.g. whether lottery ticket numbers match drawn numbers). Additionally, because only the player device needs to be retained to win and claim a lottery prize, a lottery player cannot lose the lottery ticket as might be the case with physical (e.g. paper) tickets. Further, in the case that a player device **2111** is lost, stolen, or broken, virtual information associated with the player and/or player device **2111** may allow recovery of the lottery account and/or prize winnings associated with the player **2103** and/or player device **2111**.

FIG. **22** illustrates a system and method **2200** for delivering event-driven, customizable targeted data (e.g. marketing promotions) to lottery players via an Internet-enabled device.

Patterns of event data may be identified (e.g., over a period of time) to form player profile data. The player profile data may comprise metadata (e.g., player's game playing history including identity of mobile devices used to play games, play's game playing purchase history, player's identification information include age, location, name, other details, etc.) describing a lottery player associated with lottery game play via an Internet-enabled digital device. Player profile data and/or event data may be external data **2201** or internal data **2203**. The player data may be processed or combined (e.g., dynamically at the time of delivering the targeted data) to form dynamic data **2207**. Customized targeted data **2215** (e.g., targeted signal) may be generated for the player using the dynamic data **2207** based on events **2213** (e.g., winning, losing, purchasing one or more tickets, etc.) associated with lottery game play. For instance, such an event **2213** may include losing a lottery game, and the associated customized targeted data **2215** may include a coupon for the retailer of the lottery ticket. Additionally, a game multiplier purchase may be offered post game entry but pre-draw. Additionally, dynamic data may change on external and/or internal data; for example, a different day of the week may result in different dynamic data, which may in turn result in different customized targeted data. External data **2201** may comprise the prize awarded to the lottery player (e.g. dollar amount) or lottery ticket merchant rules for modifying the prize associated with a lottery win or loss (e.g. offer in-store credit in addition to lottery winnings in order to incent lottery ticket purchase from that merchant). Additionally, external data may comprise any data not collected by a VAN (e.g. data from merchant, transaction processing and/or authorization network, lottery ticket issuer, and/or lottery system). Internal data **2203** may comprise VAN rules (e.g. for rule-based

events) or any other data captured by a VAN. Based on the external data **2201** and internal data **2203**, a data processing transformation **2205** produces dynamic data **2207** that may change depending on an event **2213**. Data processing **2205** may include processing based on defined rules (e.g. set by the VAN) or intelligently generated rules at the time of processing, or it may include processing based on ad hoc rules (e.g. via unclassified pattern recognition). Additionally, data processing may reduce or compress the input sources of data (i.e. external and/or internal data). The dynamic data **2207** can be further informed or modified by a data modeling process **2209** and/or by information from a targeted data database **2211**. A targeted data database **2211** may be populated with targeted data by a VAN, merchant, and/or lottery system. Any gaming and/or transaction (e.g. financial transaction) may be a type of computing operation.

Benefits of such a system and method **2200** may include the ability to give lottery ticket merchants more information about lottery players (e.g. regarding their purchase behaviors), and the ability to target specific lottery players with customized targeted data. Such benefits could be employed, e.g., to optimize a lottery player's in-store spending at the merchant location. Such a system and method **2200** could also allow other entities to benefit from lottery player information and the ability to customize targeted data to lottery players (e.g. a lottery system associated with a first state may wish to offer a discount to a lottery ticket purchaser who has just arrived from a second state). Note that regardless of whether such a system and method **2200** is employed, other entities beyond the VAN (e.g. merchant, lottery system) could still receive and/or benefit from information processed by the gaming provider system. For example, the VAN may provide merchants with lottery player purchase information to incentivize merchant participation.

FIG. **23** illustrates a system and method for enabling a lottery player to exchange the denominated monetary value of a prize for a substitute monetary instrument of equal or greater value.

Within a value added network (VAN), patterns of event data may be identified to form customer profile data. The customer profile data may comprise metadata describing a lottery player associated with lottery game and metadata describing a customer associated with a loyalty program. This metadata may include external data **2301** and/or internal data **2303**. The customer data may be processed **2305** to form dynamic data **2307** (e.g., at the time of presenting the exchange data). After a lottery draw occurs, a lottery game entry associated with the customer playing the lottery may win a low-tier prize in a lottery drawing. Using the dynamic data **2307**, customized exchange data **2315** (e.g. exchange offer) to exchange the denominated monetary value of a lottery prize **2313** for a monetary instrument of equal or greater value may be generated based on a data modeling process **2309** and exchange data database **2311**. This may involve cross-referencing an exchange data database and suggesting one or more exchange data consistent with the customer profile data (e.g., based on other players with similar profile data selecting or being presented with particular exchange data). The exchange data database may contain exchange data and their associated lottery prizes. The exchange data database may be populated by a VAN, merchant, and/or lottery system (e.g., and may be populated based on historical or predicted player preferences). The player **2317** may accept or decline the exchange data **2315**. If a player **2317** accepts the exchange data **2315**, a monetary instrument may be provided to the player at the agreed upon value and the ownership of the prize **2313** is transferred to the data instrument offeror **2319** of the substitute monetary instrument. Such a system and method **2300** may be employed to augment the winnings for a player **2317** while also benefiting the data instrument offeror **2319**. For example, a merchant may offer a gift card of higher value to a prize-winning player **2317** in order to increase the player's **2317** loyalty to that merchant.

FIG. **24** illustrates a system and method for event driven rule-based messaging for device-enabled lottery gameplay.

A flexible, event driven and conditional rule-based messaging system (e.g., an intelligent messaging system) may be implemented for use in lottery applications. A rule mechanism may be implemented having a "When-If-Then" event-driven, conditional, action-invoking approach that permits definition of a repertoire of events considered to be significant events upon which to trigger actions specific rule-based messages. Each particular event may be associated with a specific mail message and/or rules to promote context relevant messaging. It is possible that only relevant rules, i.e. those associated with a satisfied event, need to be further processed. A graphical user interface to a structured rule editor may facilitate synthesis of rules by a lottery application via a rule engine **2407**. The rule engine **2407** may be substantially transparent. A modular architecture for the structured rule editors could allow an extensible and portable facility invoking selected rule scripting language to implement various functions in the context of various lottery game play environments. Such a rule-based messaging system and method **2400** for lottery gameplay may transmit messages originating from a rule engine **2407** and messaging system **2405** to a lottery card holder **2401** via a value added network **2403**. The rule engine **2407** may be informed in part by a persona. A persona may be data associated with a user and/or a user device (e.g. lottery game play purchase activity, game play wins, game play losses, game play prize amounts, location information, jurisdiction information, and/or user-defined preferences relating to rule-based messaging system interaction). Rules may be based on a user profile (e.g. prior user behavior or disclosed user preferences and/or characteristics), a user location, and/or other technical logic. For example, a lottery card holder **2401** may be notified of new lottery gameplay data instruments when it is determined that the lottery card holder's **2401** location has changed from a first state to a second state. A messaging system may be used to relay information from a rule engine **2407** to the lottery card holder **2401**. Such messages may be transmitted over a cellular network, or via the Internet. The rule engine may be a part of and/or population by a VAN, lottery system, and/or merchant.

FIG. **25** illustrates a system and method for entering lottery games in more than one lottery system jurisdiction via a single Internet-enabled device.

Lottery game play may be enabled by a point-of-sale solution (POS) **2501**, lottery account (account), transaction authorization and/or processing network (TPN) **2503**, value added network (VAN) **2511**, and Internet-enabled device (device) **2509**. Lottery game play may be further enabled by a lottery account issuer **2505** and one or more lottery game processors **2507**. A lottery player may purchase a lottery game entry using an account at a POS **2501** in one jurisdiction. The game entry purchase is processed via an account, TPN **2503**, VAN **2511** and a device **2509**. A lottery account may be associated with a lottery card, lottery player, lottery player device **2509**, none of these, or some combination of the previously listed. A lottery account may be utilized to verify lottery game compliance, lottery game-

associated transaction, and/or lottery player identification. The account holder enters the lottery game via a device **2509**. The device **2509** receives a digital lottery ticket following game entry. The lottery player then purchases a lottery game entry in a separate lottery jurisdiction using the same account. Following the purchase, the cardholder may receive an additional digital ticket for the new lottery jurisdiction on the device **2509**. The process can repeat indefinitely, allowing the player to enter in one or more lottery games in two or more lottery jurisdictions without limitation. Such a system and method **2500** may be beneficial by automating lottery gameplay compliance regardless or user location and/or lottery jurisdiction. Additionally, such a system and method **2500** may allow gameplay of multiple lottery games from different jurisdictions on a single player device and/or within one or more locations and/or jurisdictions. Note that a lottery jurisdiction may be associated with a state, may be associated with a region within a state, or may not be associated with either. The TPN may facilitate, authorize, and/or record transactions at at least one POS, and may further relay information to/from a lottery account issuer **2505**. A lottery account issuer may be part of a VAN **2511** or it may not be. A lottery account issuer may generate and distribute lottery account information, or it may distribute lottery account information received from another entity (e.g. VAN **2511** and/or lottery game processors **2507**). Lottery game processors **2507** may be government- (e.g. state-) run, or they may be authorized by a governmental entity. Further, lottery game processors may generate and/or distribute information associated with lottery gameplay (e.g. game play price, game play prize(s), game play information, game play eligibility based on location and/or jurisdictional information).

FIG. **26** illustrates a system and method for purchasing lottery game entries in more than one lottery system jurisdiction.

Lottery game play may be enabled by a point-of-sale solution (POS) **2601**, lottery account (account), transaction authorization and/or processing network (TPN) **2603**, value added network (VAN) **2611**, and Internet-enabled device (device) **2609**. Lottery game play may be further enabled by a lottery account issuer **2605** and lottery game processors **2607**. A lottery player may purchases a lottery game entry using a lottery account at a POS **2601**. The lottery game purchase is processed via a lottery account, TPN **2603**, VAN **2611** and a device **2609**. The lottery account holder may enter the lottery game via the device **2609**. The device **2609** may receive a digital lottery ticket on the device **2609** following game entry. The lottery player may purchase a subsequent lottery game entry at a POS **2601**, and the process repeats resulting in two or more lottery game entries for an account (e.g., associated with at least one of device identification information, phone number, user identification information, etc.) and two or more digital lottery tickets received on a single device **2609**. Such a system and method **2600** could allow for multiple lottery games to be played on the same device **2609**, even if the lottery games originate from different jurisdictions or are associated with different gaming providers. Additionally, prizes from different game plays (e.g., associated with different gaming providers and/or jurisdictions, or associated with different game types) could be aggregated into a single prize, which may be more convenient for the lottery player and/or any other entity in the lottery gameplay system. Additionally lottery game play activity from multiple different lottery games could be summarized in one location (e.g. visible on virtual page of a user device).

FIG. **27** illustrates a system and method for location-aware lottery gameplay.

Lottery game play may be enabled by a point-of-sale solution (POS) **2701**, lottery account (account), transaction authorization and/or processing network (TPN) **2703**, value added network (VAN) **2709** and Internet-enabled device (device) **2705**. A lottery player may purchase a lottery game entry using a lottery account at a POS **2701**. The lottery game purchase is processed via a lottery account, TPN **2703**, VAN **2709** and a device **2705**. The VAN **2709** may receive and/or record the POS **2701** location information. The lottery account holder may request entry into the lottery game via the device **2705**. The device **2705** may transmit the lottery account holder's location to the VAN **2709**. The VAN **2709** may cross-reference and/or compare the location of the POS **2701** location (e.g., at the time of purchase) and the location of the lottery account holder's device **2705** at the time of request to confirm at least partially matching jurisdictions. Game entry may be conditionally allowed if jurisdictions match (or at least partially match). Game entry may be conditionally disallowed if jurisdictions do not match (or do not at least partially match). Such a system and method **2700** may utilize GPS signals, cellular tower localization, IP address, user input, or other information to determine device **2705** and/or POS **2701** location and/or jurisdiction.

FIG. **28** illustrates a system diagram of a gaming provider system **2800**. Some embodiments may use all the elements shown in the FIG. **2800**, while some may not. Additionally, some embodiments may employ additional elements not shown in the FIG. **2800**, while others may not. The elements of such a gaming provider system **2800** have previously been described. Such a system may comprise a user **2801**, POS **2803**, TPN **2805**, VAN **2807**, lottery system **2809**, user device **2811**, lottery card, **2813**, card issuer **2815**, messaging system **2817**, and/or transaction facilitation system **2819**. The transaction facilitation system **2819** may facilitate financial transactions, such as post or pre-gaming financial transactions.

In some embodiments, motion and/or orientation sensors (e.g. accelerometer, gyroscope, magnetometer) associated with the lottery player device may be utilized to influence lottery registration, lottery card issuance, lottery gameplay, lottery prize, lottery prize payment mechanism, customized targeted data, exchange data, customer data, fraud detection, and/or user identification. For example, a unique motion associated with a user may be required to be performed before a purchase is allowed or a prize is claimed. Additionally, some games may be played in part or in whole by physical device motions (e.g. shake, tilt).

FIG. **29** illustrates a system diagram of a gaming provider system. Some embodiments may use all the elements shown in the FIG. **2900**, while some may not. Additionally, some embodiments may employ additional elements not shown in the FIG. **2900**, while others may not. Any element may communicate with any other element via inter-communication circuitry **2911**, **2931**, **2951**, **2971** and connections between functional blocks **2910**, **2930**, **2950**, **2970**. The various elements may be present in any local or remote computing device described in this disclosure, such as any of the boxes illustrated in any of the preceding figures. In some embodiments, one or more of the elements may be specialize hardware or software elements for specifically performing an operation associated with a gaming transaction.

A processing unit **2930** may contain an event triggered unit **2932**, for example to implement rule-based messaging. Further, the processing unit **2930** may contain a game

processing unit **2933**, for example to send and receive gameplay information between a lottery player device and lottery system. Further, the processing unit **2930** may contain a database access unit **2934**, for example to efficiently store and access gaming provider system information via a database storage system **2914**. This information may include user profile data, transaction histories, lottery account numbers, and/or numbers associated with lottery cards. The processing unit **2930** may further comprise a location determination unit **2935**, for example to determine lottery player device or point of sale jurisdiction or to determine appropriate targeted data or exchange data. The processing unit **2930** may further comprise a jurisdiction determination unit **2936**, for example to determine lottery jurisdiction from location information. Location information (and/or associated jurisdiction information) may be used to authorize lottery game play purchase and/or determine lottery game play exchange data. The processing unit **2930** may further comprise a code generation unit **2938**, for example to appropriately generate lottery card codes based on previously issued codes and in order to avoid fraud issues. A code management unit **2939** may further monitor issued, expired, and or pending codes, as well as inform the code generation unit **2938** of preferable codes to use in the future. A transaction watchdog unit **2940** may monitor transactions and/or lottery card activations associated with the gaming provider system **2900** in order to detect malfunctioning or fraudulent activity. A transaction authorization unit **2941** may receive and either authorize or reject transactions associated with the gaming provider system **2900** depending on, e.g., jurisdiction information, lottery system rules, gaming provider system **2900** rules, and/or transaction facilitation system information. A transfer unit **2942** may direct payments from the appropriate sender to the appropriate receiver, e.g. from a lottery system to a transaction facilitation system or a transaction account associated with a lottery player. A reporting unit **2943** may record, process, and/or report transfers that have occurred via the transfer unit **2942** (including financial transfers). A resource allocation unit **2937** may monitor resource usage of the processing unit **2930** and appropriately allocate resources, e.g. depending on resource needs, constraints, and/or processing unit **2930** rules.

A memory unit **2910** may be used to store information associated with the gaming provider system **2900**, potentially utilizing a cache storage unit **2913**, a database storage system **2914**, a secure storage unit **2915**, and/or a memory backup unit **2916**. Further, a memory management unit **2912** may be utilized to monitor memory resource usage and/or appropriately direct send and/or receive requests from the processing unit **2930**. A communications unit **2950** may be employed to facilitate communications between the gaming provider system **2900** and external entities, e.g. a lottery system, transaction facilitation system, messaging system, transaction processing network, card issuer, and/or lottery player device. The communications unit **2950** may employ a modem unit **2952**, encryption/decryption unit **2953**, network protocol unit **2954**, network router **2955**, network switch **2956**, firewall **2957**, antenna **2958**, and/or packet queuing system **2959**. The packet queuing system **2959** may prepare packets associated with lottery system, transaction facilitation system, messaging system, and/or communications network metadata for transmittal or reception. A input/output unit **2970** may be employed to facilitate human interaction with the lottery provider system **2900**. A graphics processing unit **2972** and/or hardware peripheral drivers **2973** (e.g., one or more specialized drivers) may be utilized.

In some embodiments, a method is provided for processing information associated with, or enabling initiation or conduction of, game-playing transactions, the method comprising: receiving, from a user device, or sending, to the user device, information associated with a game-playing transaction between a mobile device and one or more game-playing apparatuses configured for operations associated with game-playing transaction, wherein the game-playing transaction is associated with a game, wherein the game is associated with or comprises game information; determining, using one or more computing device processors, identification information or location information associated with the user device or the one or more game-playing apparatuses; determining, using the one or more computing device processors, the user device is an approved user device or the one or more game-playing apparatuses are approved one or more game-playing apparatuses, respectively, the user device or the one or more game-playing apparatuses being located in an approved location associated with the game; processing the information, or enabling initiation or conduction of the game-playing transaction, based on at least one of: determining, using the one or more computing device processors, the user device or the one or more game-playing apparatuses is the approved user device or the approved one or more game-playing apparatuses, respectively, based on cross-referencing second information or second identification information, and determining, using the one or more computing device processors, the identification information or the location information is at least partially consistent with or mappable to the second information or the second identification information, or determining, using the one or more computing device processors, a period of validity associated with the game-playing transaction or the game information has not expired, wherein the information associated with the game-playing transaction is received or sent on a first communication interface, and wherein the game-playing transaction is conducted or will be conducted on a second communication interface.

In some embodiments, the user device or the one or more game-playing apparatuses comprises or is associated with, integrated with, or comprised in at least one of a pump, an ATM, a servicing station, a retail apparatus, an entity, a local computing apparatus, or a remote computing apparatus.

In some embodiments, the user device comprises a retail apparatus configured for processing the information associated with the game-playing transaction.

In some embodiments, the one or more game-playing apparatuses comprises a remote server configured for the operations associated with the game-playing transaction.

In some embodiments, the mobile device comprises a mobile phone configured for second operations associated with the game-playing transaction.

In some embodiments, the user device comprises one or more local or remote game-playing apparatuses configured for second operations associated with the game-playing transaction.

In some embodiments, the user device comprises a point-of-sale terminal configured for enabling initiation or conduction of the game-playing transactions.

In some embodiments, the one or more game-playing apparatuses comprises one or more local or remote game-playing apparatuses.

In some embodiments, determining, using the one or more computing device processors, the user device or the one or more game-playing apparatuses is the approved user device or the approved one or more game-playing apparatuses, respectively, may be based on cross-referencing the second

information or the second identification information, and determining, using the one or more computing device processors, the identification information is at least partially consistent with or mappable to the second information or the second identification information, or determining, using the one or more computing device processors, the period of validity associated with the game-playing transaction has not expired, comprises: determining, using the one or more computing device processors, the user device or the one or more game-playing apparatuses is the approved user device or the approved one or more game-playing apparatuses, respectively, based on cross-referencing the second information or the second identification information, and determining, using the one or more computing device processors, the identification information is at least partially consistent with or mappable to the second information or the second identification information.

In some embodiments, determining, using the one or more computing device processors, the user device or the one or more game-playing apparatuses is the approved user device or the approved one or more game-playing apparatuses, respectively, based on cross-referencing the second information or the second identification information, and determining, using the one or more computing device processors, the identification information is at least partially consistent with or mappable to the second information or the second identification information, or determining, using the one or more computing device processors, the period of validity associated with the game-playing transaction has not expired, comprises: determining, using the one or more computing device processors, the period of validity associated with conducting the game-playing transaction has not expired.

In some embodiments, the game-playing transaction comprises at least one of a gaming transaction, a game initiation transaction, a game completing transaction, a pre-game transaction, a post-game transaction, an in-game transaction, a game-related transaction, a location determining transaction, an identification transaction, an information processing transaction, a user identification transaction, a user device identifying transaction, a mobile device identifying transaction, a game-playing apparatus-related transaction, or a game-playing apparatus identifying transaction.

In some embodiments, the receiving or sending the information is executed before the game-playing transaction.

In some embodiments, the receiving or sending the information is executed after the game-playing transaction.

In some embodiments, the receiving or sending the information is executed as a part of the game-playing transaction.

In some embodiments, the one or more computing device processors are comprised in at least one of the user device, the one or more game-playing apparatuses, the mobile device, one or more local computing apparatuses, or one or more remote computing apparatuses.

In some embodiments, the one or more computing device processors are comprised in the one or more game-playing apparatuses.

In some embodiments, the first communication interface is located between the user device and the one or more game-playing apparatuses, and the second communication interface is located between the mobile device and the one or more game-playing apparatuses.

In some embodiments, the information comprises the identification information.

In some embodiments, the identification information associated with the user device or the one or more game-playing apparatuses comprises or is associated with or comprised in at least one of user device identification information, game-playing apparatus identification information, merchant information, merchant store information, or second location information.

In some embodiments, the game-playing transaction comprises sending third information from the mobile device to the one or more game-playing apparatuses.

In some embodiments, the first communication interface or the second communication interface comprises at least one of a Bluetooth-based interface, a near-field communication (NFC) interface, a code-based interface, a Wi-Fi interface, a cellular interface, or a wired interface.

In some embodiments, the one or more game-playing apparatuses comprise a gaming facilitator, wherein the gaming facilitator comprises a firewall, logging security, core logic, and transaction logic.

In some embodiments, the one or more game-playing apparatuses comprise a communications exchange server.

In some embodiments, determining, using the one or more computing device processors, the location is at least partially consistent with or mappable to the second information or the identification information comprises determining, using the one or more computing device processors, the location matches the second information or the identification information.

Some embodiments further comprise modifying the mobile device, the user device, or the one or more game-playing apparatuses based on determining the user device is the approved user device or the one or more game-playing apparatuses are the approved one or more game-playing apparatuses, respectively.

In some embodiments, processing the game-playing transaction, or enabling initiation or conduction of the game-playing transaction, is based on validating, using the one or more computing device processors, an age of a user associated with the user device, the one or more game-playing apparatuses, or the mobile device.

In some embodiments, the game information is comprised in the information.

In some embodiments, the information is comprised in the game information.

In some embodiments, the game-playing transaction comprises a gaming operation.

In some embodiments, the game-playing transaction comprises a game-related operation.

In some embodiments, the user device comprises a local computing apparatus and a remote computing apparatus.

In some embodiments, the one or more game-playing apparatuses comprises a local computing apparatus and a remote computing apparatus.

In some embodiments, the game comprises a lottery game.

In some embodiments, the game comprises a non-lottery game.

In some embodiments, the one or more computing device processor comprises one or more software-customized processors configured for the operations associated with the game-playing transaction.

Some embodiments may provide a network system comprising one or more game-playing apparatuses for processing, or enabling initiation or conduction of, game-playing transactions, the one or more game-playing apparatuses comprising one or more software-customized processors configured for: receiving, from a user device, or sending, to the user device, information associated with a game-playing transaction between a mobile device and the one or more game-playing apparatuses, wherein the game-playing trans-

action is associated with a game, wherein the game is associated with or comprises game information; determining identification information or location information associated with the user device or the one or more game-playing apparatuses; determining the user device is an approved user device or the one or more game-playing apparatuses are approved one or more game-playing apparatuses, respectively, the user device or the one or more game-playing apparatuses being located in an approved location associated with the game; processing the information, or enabling initiation or conduction of the game-playing transaction, based on at least one of: determining the user device or the one or more game-playing apparatuses is the approved user device or the approved one or more game-playing apparatuses, respectively, based on cross-referencing second information or second identification information, and determining, using the one or more computing device processors, the identification information or the location information is at least partially consistent with or mappable to the second information or the second identification information, wherein the information associated with the game-playing transaction is received or sent on a first communication interface, and wherein the game-playing transaction is conducted or will be conducted on a second communication interface.

In some embodiments involving the network system, the user device or the one or more game-playing apparatuses comprises or is associated with, integrated with, or comprised in at least one of a pump, an ATM, a servicing station, a retail apparatus, an entity, a local computing apparatus, or a remote computing apparatus.

In some embodiments involving the network system, the user device comprises a retail apparatus configured for processing the information associated with the game-playing transaction.

In some embodiments involving the network system, the user device comprises a retail terminal configured for enabling initiation or conduction of the game-playing transaction.

In some embodiments involving the network system, the one or more game-playing apparatuses comprises one or more remote servers configured for operations associated with the game-playing transaction.

In some embodiments involving the network system, the mobile device comprises a mobile phone configured for operations associated with the game-playing transaction.

In some embodiments involving the network system, the game comprises a lottery game.

In some embodiments involving the network system, the game comprises a non-lottery game.

In some embodiments involving the network system, the one or more software-customized processors are specifically configured for processing, or enabling initiation or conduction of, the game-playing transaction.

In some embodiments involving the network system, the game-playing transaction comprises at least one of a gaming transaction, a game initiation transaction, a game completing transaction, a pre-game transaction, a post-game transaction, an in-game transaction, a game-related transaction, a location determining transaction, an identification transaction, an information processing transaction, a user identification transaction, a user device identifying transaction, a mobile device identifying transaction, a game-playing apparatus-related transaction, or a game-playing apparatus identifying transaction.

In some embodiments involving the network system, the first communication interface is located between the user device and the one or more game-playing apparatuses, and the second communication interface is located between the mobile device and the one or more game-playing apparatuses.

In some embodiments involving the network system, the identification information associated with the user device or the one or more game-playing apparatuses comprises or is associated with or comprised in at least one of user device identification information, game-playing apparatus identification information, merchant information, merchant store information, or second location information.

In some embodiments involving the network system, the first communication interface or the second communication interface comprises at least one of a Bluetooth-based interface, a near-field communication (NFC) interface, a code-based interface, a Wi-Fi interface, a cellular interface, or a wired interface.

In some embodiments involving the network system, the receiving or sending the information is executed before the game-playing transaction.

In some embodiments involving the network system, the receiving or sending the information is executed after the game-playing transaction.

In some embodiments involving the network system, the receiving or sending the information is executed as a part of the game-playing transaction.

Some embodiments may provide a method for processing information associated with, or enabling initiation or conduction of, game-playing transactions, the method comprising: receiving, from a user device and at one or more game-playing apparatuses configured for operations associated with game-playing transactions, information associated with a game-playing transaction, wherein the game-playing transaction is associated with a game, wherein the game is associated with or comprises game information, wherein the user device communicates with the one or more game-playing apparatuses; determining, using the one or more computing device processors, the information is at least partially consistent with or mappable to second information, the second information being received or accessed from a second user device different from the user device, the second user device being located in an approved location associated with the game, the second user device being associated with approved identification information or approved location information; processing the information, or enabling initiation or conduction of the game-playing transaction, based on at least one of: receiving or accessing, using the one or more computing device processors, the second information and determining, using the one or more computing device processors, the information is at least partially consistent with or mappable to the second information, the second information being received or accessed from the second user device located in the approved location associated with the game, or determining, using the one or more computing device processors, a period of validity associated with the game-playing transaction or the game information has not expired, wherein the information associated with the game-playing transaction is received on a first communication interface, and wherein the second information is received or accessed on a second communication interface.

In some embodiments involving the aforementioned method, the second user device or the one or more game-playing apparatuses comprises or is associated with, integrated with, or comprised in at least one of a pump, an ATM, a servicing station, a retail apparatus, an entity, a local computing apparatus, or a remote computing apparatus.

In some embodiments involving the aforementioned method, the second user device comprises a retail apparatus configured for at least one of receiving, processing, or transmitting the second information.

In some embodiments involving the aforementioned method, the one or more game-playing apparatuses comprises a remote server configured for the operations associated with the game-playing transaction.

In some embodiments involving the aforementioned method, the user device comprises a mobile telecommunication device configured for second operations associated with the game-playing transactions.

In some embodiments involving the aforementioned method, the second user device comprises one or more local or remote game-playing apparatuses configured for second operations associated with the game-playing transactions.

In some embodiments involving the aforementioned method, the second user device comprises a retail terminal configured for enabling initiation or conduction of the game-playing transaction.

In some embodiments involving the aforementioned method, the second user device comprises a local computing terminal configured for enabling initiation or conduction of the game-playing transaction.

In some embodiments involving the aforementioned method, the one or more game-playing apparatuses comprises one or more local or remote game-playing apparatuses.

In some embodiments involving the aforementioned method, receiving or accessing, using the one or more computing device processors, the second information and determining, using the one or more computing device processors, the information is at least partially consistent with or mappable to the second information, the second information being received or accessed from the second user device located in the approved location associated with the game, or determining, using the one or more computing device processors, a period of validity associated with the game-playing transaction or the game information has not expired, comprises: receiving or accessing, using the one or more computing device processors, the second information and determining, using the one or more computing device processors, the information is at least partially consistent with or mappable to the second information, the second information being received or accessed from the second user device located in the approved location associated with the game.

In some embodiments involving the aforementioned method, receiving or accessing, using the one or more computing device processors, the second information and determining, using the one or more computing device processors, the information is at least partially consistent with or mappable to the second information, the second information being received or accessed from the second user device located in the approved location associated with the game, or determining, using the one or more computing device processors, a period of validity associated with the game-playing transaction or the game information has not expired, comprises: determining, using the one or more computing device processors, a period of validity associated with the game-playing transaction or the game information has not expired.

In some embodiments involving the aforementioned method, the game-playing transaction comprises receiving, from the user device and at the one or more game-playing apparatuses configured for the operations associated with the game-playing transactions, the information associated with the game-playing transaction.

In some embodiments involving the aforementioned method, the game-playing transaction comprises at least one of a gaming transaction, a game initiation transaction, a game completing transaction, a pre-game transaction, a post-game transaction, an in-game transaction, a game-related transaction, a location determining transaction, an identification transaction, an information processing transaction, a user identification transaction, a user device identifying transaction, a game-playing apparatus-related transaction, or a game-playing apparatus identifying transaction.

In some embodiments involving the aforementioned method, the receiving the information is executed before the game-playing transaction.

In some embodiments involving the aforementioned method, the receiving the information is executed after the game-playing transaction.

In some embodiments involving the aforementioned method, the receiving the information is executed as a part of the game-playing transaction.

In some embodiments involving the aforementioned method, the one or more computing device processors are comprised in at least one of the user device, the one or more game-playing apparatuses, the second user device, one or more local computing apparatuses, or one or more remote computing apparatuses.

In some embodiments involving the aforementioned method, the one or more computing device processors are customized for performing specific operations associated with the game-playing transactions.

In some embodiments involving the aforementioned method, the one or more computing device processors are comprised in the one or more game-playing apparatuses.

In some embodiments involving the aforementioned method, the first communication interface is located between the user device and the one or more game-playing apparatuses, and the second communication interface is located between the second user device and the one or more game-playing apparatuses.

In some embodiments involving the aforementioned method, the information or the second information comprises identification information.

In some embodiments involving the aforementioned method, the second user device is determined to be in the approved location based on at least one of user device identification information, game-playing apparatus identification information, merchant information, merchant store information, or second location information.

In some embodiments involving the aforementioned method, the game-playing transaction comprises sending third information from the user device to the one or more game-playing apparatuses.

In some embodiments involving the aforementioned method, the first communication interface or the second communication interface comprises at least one of a Bluetooth-based interface, a near-field communication (NFC) interface, a code-based interface, a Wi-Fi interface, a cellular interface, a wireless interface, or a wired interface.

Some embodiments involving the aforementioned method further comprise modifying the second user device based on determining the second user device is the approved user device.

In some embodiments involving the aforementioned method, processing the game-playing transaction, or enabling initiation or conduction of the game-playing transaction, is based on validating, using the one or more com-

puting device processors, an age of a user associated with the user device, the one or more game-playing apparatuses, or the second user device.

In some embodiments involving the aforementioned method, the game information is comprised in at least one of the information or the second information.

In some embodiments involving the aforementioned method, at least one of the information or the second information is comprised in the game information.

In some embodiments involving the aforementioned method, the game-playing transaction comprises a gaming operation.

In some embodiments involving the aforementioned method, the game-playing transaction comprises a game-related operation.

In some embodiments involving the aforementioned method, the second user device comprises a local computing apparatus and a remote computing apparatus.

In some embodiments involving the aforementioned method, the one or more game-playing apparatuses comprises a local computing apparatus and a remote computing apparatus.

In some embodiments involving the aforementioned method, the game comprises a lottery game.

In some embodiments involving the aforementioned method, the game comprises a non-lottery game.

Some embodiments may comprise an apparatus for processing information associated with, or enabling initiation or conduction of, game-playing transactions, the apparatus comprising one or more software-customized processors configured for: receiving, from a user device and at one or more game-playing apparatuses configured for operations associated with game-playing transactions, information associated with a game-playing transaction, wherein the game-playing transaction is associated with a game, wherein the game is associated with or comprises game information, wherein the user device communicates with the one or more game-playing apparatuses; determining the information is at least partially consistent with or mappable to second information, the second information being received or accessed from a second user device different from the user device, the second user device being located in an approved location associated with the game; processing the information, or enabling initiation or conduction of the game-playing transaction, based on at least one of: receiving or accessing the second information and determining the information is at least partially consistent with or mappable to the second information, the second information being received or accessed from the second user device located in the approved location associated with the game, or determining a period of validity associated with the game-playing transaction or the game information has not expired, wherein the information associated with the game-playing transaction is received on a first communication interface, and wherein the second information is received or accessed on a second communication interface.

In some embodiments involving the apparatus, the second user device comprises a retail apparatus configured for at least one of receiving, processing, or transmitting the second information.

In some embodiments involving the apparatus, the one or more game-playing apparatuses comprises a remote server configured for the operations associated with the game-playing transaction.

In some embodiments involving the apparatus, the user device comprises a mobile telecommunication device configured for second operations associated with the game-playing transactions.

In some embodiments involving the apparatus, the one or more software-customized processors are specifically configured for processing, or enabling initiation or conduction of, the game-playing transaction.

In some embodiments involving the apparatus, the game comprises a lottery game.

In some embodiments involving the apparatus, the game comprises a non-lottery game.

While various embodiments in accordance with the disclosed principles have been described above, it should be understood that they have been presented by way of example only, and are not limiting. Thus, the breadth and scope of the invention(s) should not be limited by any of the above-described exemplary embodiments, but should be defined only in accordance with the claims and their equivalents issuing from this disclosure. Furthermore, the above advantages and features are provided in described embodiments, but shall not limit the application of such issued claims to processes and structures accomplishing any or all of the above advantages.

Additionally, the section headings herein are provided for consistency with the suggestions under 37 C.F.R. 1.77 or otherwise to provide organizational cues. These headings shall not limit or characterize the invention(s) set out in any claims that may issue from this disclosure. Specifically and by way of example, although the headings refer to a "Technical Field," such claims should not be limited by the language chosen under this heading to describe the so-called technical field. Further, a description of a technology in the "Background" is not to be construed as an admission that technology is prior art to any invention(s) in this disclosure. Neither is the "Summary" to be considered as a characterization of the invention(s) set forth in issued claims. Furthermore, any reference in this disclosure to "invention" in the singular should not be used to argue that there is only a single point of novelty in this disclosure. Multiple inventions may be set forth according to the limitations of the multiple claims issuing from this disclosure, and such claims accordingly define the invention(s), and their equivalents, that are protected thereby. In all instances, the scope of such claims shall be considered on their own merits in light of this disclosure, but should not be constrained by the headings herein.

What is claimed is:

1. A method for processing information associated with, or enabling initiation or conduction of, game-playing transactions, the method comprising:

receiving, from a user device and at one or more game-playing apparatuses configured for operations associated with game-playing transactions, information associated with a game-playing transaction, wherein the game-playing transaction is associated with a game, wherein the game is associated with or comprises game information;

determining, using one or more computing device processors, the information is at least partially consistent with or mappable to second information, the second information being received or accessed from a second user device different from the user device, the second user device being located in an approved location associated with the game, the second user device being associated with approved identification information or approved location information;

processing the information, or enabling initiation or conduction of, the game-playing transaction, based on at least one of:

determining, using the one or more computing device processors, the information is at least partially consistent with or mappable to the second information, the second information being received or accessed from the second user device located in the approved location associated with the game, or

determining, using the one or more computing device processors, a period of validity associated with the game-playing transaction or the game information has not expired,

wherein the information associated with the game-playing transaction is received on a first communication interface, and

wherein the second information is received or accessed on a second communication interface.

2. The method of claim **1**, wherein at least one of the user device, the second user device, or the one or more game-playing apparatuses comprises or is associated with, integrated with, or comprised in at least one of a pump, an ATM, a servicing station, a retail apparatus, an entity, a local computing apparatus, or a remote computing apparatus.

3. The method of claim **1**, wherein the second user device comprises a retail apparatus software-customized for at least one of receiving, processing, or transmitting the second information.

4. The method of claim **1**, wherein the one or more game-playing apparatuses comprise or are comprised in one or more software-customized remote servers configured for the operations associated with the game-playing transactions.

5. The method of claim **1**, wherein the user device comprises a mobile telecommunication device, wherein the mobile telecommunication device executes a customized application configured for second operations associated with the game-playing transactions.

6. The method of claim **1**, wherein the user device or the second user device comprises at least one of a local computing apparatus or a remote computing apparatus.

7. The method of claim **1**, wherein the game comprises a lottery game.

8. The method of claim **1**, wherein the game comprises a non-lottery game.

9. The method of claim **1**, wherein an interaction between a gaming card and the second user device causes the second information to be received or accessed from the second user device.

10. The method of claim **9**, wherein the second information comprises identification information associated with at least one of the second user device, an entity associated with the second user device, or a user associated with the gaming card.

11. The method of claim **9**, wherein the second information is stored on the gaming card and is received or accessed by the second user device in response to the interaction between the gaming card and the second user device.

12. The method of claim **9**, wherein the second information is comprised in a chip or a magnetic stripe.

13. The method of claim **9**, wherein the interaction between the gaming card and the second user device comprises a contact-based interaction.

14. The method of claim **9**, wherein the interaction between the gaming card and the second user device comprises a contactless interaction.

15. The method of claim **9**, wherein the information received from the user device comprises at least one of gaming card identification information associated with the gaming card, gaming card account information associated with the gaming card, or code information associated with the gaming card.

16. The method of claim **15**, wherein the information is associated with or is visible on the gaming card.

17. The method of claim **15**, wherein the information further comprises identification information associated with the user device.

18. The method of claim **15**, wherein the information is associated with or is visible on the gaming card.

19. The method of claim **15**, wherein the information further comprises identification information associated with the user device.

20. The method of claim **9**, wherein the information comprises identification information associated with the user device.

21. The method of claim **20**, wherein the identification information comprises at least one of user device model identification information, user device serial identification information, or user device manufacturer identification information.

22. The method of claim **20**, wherein the identification information comprises a phone number associated with the user device.

23. The method of claim **20**, wherein the identification information is concatenated with at least one of gaming card identification information associated with the gaming card, gaming card account information associated with the gaming card, or code information associated with the gaming card in a customized data structure.

24. The method of claim **20**, wherein the information comprises an activation code.

25. The method of claim **20**, further comprising associating or registering, with the second information, or with card identification information or account information associated with the gaming card, the identification information comprised in the information.

26. The method of claim **9**, wherein the information received from the user device comprises at least one of gaming card identification information associated with the gaming card, gaming card account information associated with the gaming card, or code information associated with the gaming card.

27. The method of claim **9**, further comprising associating or registering, with the second information, or with card identification information or account information associated with the gaming card, identification information associated with the user device received, or accessed, separately from the information.

28. The method of claim **19**, wherein the second information comprises gaming card identification information or gaming card account information associated with the gaming card.

29. The method of claim **1**, further comprising associating or registering the information with the second information, or with card identification information or account information associated with a gaming card associated with the second information, thereby causing registration of at least one of the gaming card, the user device, or a user of the user device.

30. The method of claim **1**, further comprising requesting, from a gaming system, a game entry associated with the game.

31. The method of claim 1, further comprising receiving from a gaming system, or generating, a game entry associated with the game, and transmitting, to the user device or to an account associated with the user device or a gaming card, the game entry associated with the game.

32. The method of claim 31, wherein the game entry is comprised in or comprises a digital gaming ticket.

33. The method of claim 32, wherein the digital gaming ticket is generated based on the second information and the information.

34. The method of claim 33, wherein the information comprises identification information associated with the user device.

35. The method of claim 32, wherein the digital gaming ticket comprises a digital lottery ticket.

36. The method of claim 32, wherein the digital gaming ticket is transmitted to or interacts with a computing system, the transmission of the digital gaming ticket or the interaction of the digital gaming ticket with the computing system causing transmission to at least one of the user device, a third user device, or the account associated with the user device or the gaming card, an object or a prize associated with a game result status of a game entry associated with the digital gaming ticket.

37. The method of claim 31, further comprising receiving a result associated with the game or the game entry, and transmitting, to the user device or to the account associated with the user device or the gaming card, a result notification associated with the game or the game entry.

38. The method of claim 37, further comprising determining a result category associated with the game entry, and transmitting, based on the result category, a message to the user device or to the account associated with the user device or the gaming card.

39. The method of claim 38, wherein the message is customized based on user information associated with the user device or associated with a user of the user device.

40. The method of claim 39, wherein the user information comprises at least one of game habit information or device information associated with one or more computing devices used by the user to play one or more games.

41. The method of claim 38, wherein the message is transmitted prior to a draw associated with the game, but after the game entry is transmitted to the user device or to the account associated with the user device or the gaming card.

42. The method of claim 37, further comprising transmitting a switching message to the user device or to the account associated with the user device or the gaming card, the switching message being customized based on user information associated with a user of the user device or user device information associated with the user device, the switching message presenting the user with an option to switch a first object associated with the result notification to a second object.

43. The method of claim 42, wherein the second object comprises an instrument associated with an entity.

44. The method of claim 42, wherein the first object comprises a first prize, and wherein the second object comprises a second prize.

45. The method of claim 1, further comprising transmitting code information to the user device or to an account associated with the user device or a gaming card.

46. The method of claim 45, wherein the code information is transmitted in response to validating third information received from the user device or from a third user device.

47. The method of claim 46, wherein the third information is at least partially equivalent to, consistent with, or mappable to the information, wherein the information is associated with or is visible on the gaming card.

48. The method of claim 46, further comprising receiving the code information or the third information from the user device or from the third user device.

49. The method of claim 45, further comprising receiving the code information from the user device or from a third user device.

50. The method of claim 49, further comprising validating the code information and transmitting second code information to at least one of the user device, the third user device, or to the account associated with the user device or the gaming card.

51. The method of claim 50, further comprising transmitting a message to a gaming system associated with the game.

52. The method of claim 1, further comprising associating or registering the information with the second information, or with card identification information or account information associated with a gaming card associated with the second information, thereby causing enrollment of at least one of the gaming card, a user associated with the gaming card, or the user device.

53. The method of claim 52, further comprising requesting, from a customized gaming system, a game entry associated with the game.

54. The method of claim 1, further comprising determining, based on identification information associated with the user device, whether at least one of a gaming card, the user device, or a user associated with the user device was previously registered or enrolled.

55. The method of claim 54, wherein the identification information comprises a phone number.

56. The method of claim 54, further comprising requesting, from a gaming system, a game entry associated with the game.

57. The method of claim 1, further comprising determining, based on identification information associated with the user device and code information comprised in the information, whether the user device, a user associated with the user device, or a gaming card was previously registered or enrolled.

58. The method of claim 57, wherein the identification information comprises a phone number.

59. The method of claim 1, wherein the user device or the second user device communicates with the one or more game-playing apparatuses via one or more intermediary computing systems.

60. The method of claim 1, wherein the one or more computing device processors are comprised in at least one of the user device, the second user device, the one or more game-playing apparatuses, or one or more local or remote computing apparatuses.

61. An apparatus for processing information associated with, or enabling initiation or conduction of, game-playing transactions, the apparatus comprising one or more computing device processors configured to:

receive, from a user device, information associated with a game-playing transaction, wherein the game-playing transaction is associated with a game, wherein the game is associated with or comprises game information;

determine the information is at least partially consistent with or mappable to second information, the second information being received or accessed from a second user device different from the user device, the second user device being located in an approved location associated with the game, the second user device being

associated with approved identification information or approved location information;

process the information, or enabling initiation or conduction of the game-playing transaction, based on at least one of:

determining the information is at least partially consistent with or mappable to the second information, the second information being received or accessed from the second user device located in the approved location associated with the game, or

determining a period of validity associated with the game-playing transaction or the game information has not expired,

wherein the information associated with the game-playing transaction is received on a first communication interface, and

wherein the second information is received or accessed on a second communication interface.

62. The apparatus of claim **61**, wherein the game-playing transaction comprises, is, or is comprised in at least one of a gaming transaction, a game initiation transaction, a game completing transaction, a wagering transaction, a pre-game transaction, a post-game transaction, a betting transaction, an in-game transaction, a game-related transaction, a location determining transaction, an identification transaction, an information processing transaction, a sports betting transaction, a user identification transaction, a user device identifying transaction, a crypto-based transaction, a game-playing apparatus-related transaction, or a game-playing apparatus identifying transaction.

63. The apparatus of claim **61**, wherein the second user device comprises a retail apparatus configured to at least one of receive, process, or transmit the second information.

64. The apparatus of claim **61**, wherein the apparatus comprises one or more remote servers software-customized for operations associated with the game-playing transactions.

65. The apparatus of claim **61**, wherein the user device comprises a mobile telecommunication device executing a customized application for operations associated with the game-playing transactions.

66. The apparatus of claim **61**, wherein the one or more computing device processors are software-customized for processing, or enabling the initiation or the conduction of, the game-playing transaction.

67. The apparatus of claim **61**, wherein the game comprises a lottery game.

68. The apparatus of claim **61**, wherein the game comprises a non-lottery game.

69. The apparatus of claim **61**, wherein at least one of the second user device or the user device comprises or is associated with, integrated with, or comprised in at least one of a pump, an ATM, a servicing station, a retail apparatus, an entity, a local computing apparatus, a remote computing apparatus, or the apparatus.

70. The apparatus of claim **61**, wherein an interaction between a gaming card and the second user device causes the second information to be received or accessed from the second user device.

71. The apparatus of claim **70**, wherein the second user device is an approved user device from which the second information has been or is to be received or accessed.

72. The apparatus of claim **70**, wherein the one or more computing device processors are further configured to associate or register, with the second information or with card identification information or account information associated with the gaming card, device identification information associated with the user device.

73. The apparatus of claim **72**, wherein the one or more computing device processors are further configured to:

receive from a gaming system, or generating, a game entry associated with the game; and

transmit, to the user device or to an account associated with the user device or associated with the gaming card, the game entry associated with the game.

74. The apparatus of claim **70**, wherein the one or more computing device processors are further configured to:

receive from a gaming system, or generating, a game entry associated with the game; and

transmit, to the user device or to an account associated with the user device or associated with the gaming card, the game entry associated with the game.

75. The apparatus of claim **74**, wherein a second interaction between the gaming card and a third user device causes the second information to be received or accessed from the third user device.

76. The apparatus of claim **75**, wherein the third user device is an approved user device from which the second information has been or is to be received or accessed.

77. The apparatus of claim **75**, wherein the one or more computing device processors are further configured to:

receive from the gaming system or a second gaming system, or generating, a second game entry associated with the game or a second game; and

transmit, to the user device or to the account associated with the user device or associated with the gaming card, the second game entry associated with the game or the second game.

78. The apparatus of claim **77**, wherein the third user device is located in a same jurisdiction as the second user device.

79. The apparatus of claim **77**, wherein the third user device is located in a first jurisdiction, and wherein the second user device is located in a second jurisdiction different from the first jurisdiction.

80. The apparatus of claim **77**, wherein the game and the second game are associated with different game times or game draw times.

81. The apparatus of claim **70**, wherein the one or more computing device processors are further configured to transmit, to the user device or to an account associated with the user device or associated with the gaming card, a game entry associated with the game, based on:

determining location information associated with the user device; and

determining the location information associated with the user device is at least partially consistent with or mappable to the approved location or the approved location information.

82. The apparatus of claim **81**, wherein the location information associated with the user device is determined near or at a time of receiving the information from the user device.

83. The apparatus of claim **81**, wherein the location information associated with the user device is determined near or at a time when the second information is received or accessed from the second user device.

84. The apparatus of claim **70**, wherein the one or more computing device processors are further configured to refuse a game entry request associated with the game based on:

determining location information associated with the user device; and

determining the location information associated with the user device is not consistent with or not mappable to the approved location or the approved location information.

85. The apparatus of claim **84**, wherein the location information associated with the user device is determined near or at a time of receiving the information from the user device.

86. The apparatus of claim **84**, wherein the one or more computing device processors are further configured to transmit, to the user device or to an account associated with the user device or associated with the gaming card, a message indicating the refusal of the game entry request associated with the game.

87. The apparatus of claim **61**, wherein the one or more computing device processors are further configured to determine at least one of a gaming card associated with the information or the second information, or the user device associated with the information or the second information, was previously registered or enrolled.

88. The apparatus of claim **87**, wherein the one or more computing device processors are further configured to:

receive from a gaming system, or generating, a game entry associated with the game; and

transmit, to the user device or to an account associated with the user device or associated with the gaming card, the game entry associated with the game.

89. The apparatus of claim **61**, wherein the second information is received or accessed from the second user device after the first information is received from the user device.

90. The apparatus of claim **61**, wherein the second information is received or accessed from the second user device before the first information is received from the user device.

91. The apparatus of claim **61**, wherein the second information is received or accessed from the second user device substantially simultaneously as the first information is received from the user device.

92. A method for processing, or enabling initiation or conduction of, game-playing transactions, the method comprising:

receiving or sending information, associated with a game-playing transaction, between a user device and a game-playing apparatus, wherein the game-playing transaction is associated with a game, wherein the game is associated with or comprises game information;

determining, using one or more computing device processors, location information or identification information associated with the user device or the game-playing apparatus;

determining, using the one or more computing device processors, the user device or the game-playing apparatus comprises or is an approved user device or an approved game-playing apparatus, the approved user device or the approved game-playing apparatus being located in an approved location associated with the game;

processing the information or the game-playing transaction, or enabling initiation or conduction of the game-playing transaction, based on at least one of:

determining, using the one or more computing device processors, the user device or the game-playing apparatus comprises or is the approved user device or the approved game-playing apparatus based on determining, using the one or more computing device processors, the location information or the identification information is at least partially consistent with or mappable to second information or second identification information, or

determining, using the one or more computing device processors, a period of validity associated with the information or the game information has not expired,

wherein the game-playing transaction is conducted or is to be conducted on a first communication interface, and

wherein the information associated with the game-playing transaction is received or sent on the first communication interface or a second communication interface.

93. The method of claim **92**, wherein the game-playing transaction comprises, is, or is comprised in at least one of a gaming transaction, a wagering transaction, a game initiation transaction, a game completing transaction, a pre-game transaction, a post-game transaction, an in-game transaction, a game-related transaction, a betting transaction, a location determining transaction, an identification transaction, an information processing transaction, a sports betting transaction, a user identification transaction, a crypto-based transaction, a user device identifying transaction, a mobile device identifying transaction, a game-playing apparatus-related transaction, or a game-playing apparatus identifying transaction.

94. The method of claim **92**, wherein determining, using the one or more computing device processors, the user device or the game-playing apparatus comprises or is the approved user device or the approved game-playing apparatus based on determining, using the one or more computing device processors, the location information or the identification information is at least partially consistent with the second information or the second identification information comprises determining, using the one or more computing device processors, the user device or the game-playing apparatus comprises or is the approved user device or the approved game-playing apparatus based on determining, using the one or more computing device processors, the identification information is at least partially consistent with the second information or the second identification information.

95. The method of claim **92**, wherein the one or more computing device processors are comprised in at least one of the user device, the game-playing apparatus, or one or more local or remote computing apparatuses.

96. The method of claim **92**, wherein the user device comprises or is a mobile device.

97. A method for processing, or enabling initiation or conduction of, game-playing transactions, the method comprising:

receiving or sending information, associated with a game-playing transaction, between a user device and a game-playing apparatus, wherein the game-playing transaction is associated with a game, wherein the game is associated with or comprises game information;

determining, using one or more computing device processors, location information or identification information associated with the user device or the game-playing apparatus;

determining, using the one or more computing device processors, the user device or the game-playing apparatus is located in an approved location associated with the game;

processing the information or the game-playing transaction, or enabling initiation or conduction of the game-playing transaction, based on at least one of:

determining, using the one or more computing device processors, the user device or the game-playing apparatus is located in the approved location asso-

ciated with the game based on determining, using the one or more computing device processors, the location information or the identification information is at least partially consistent with or mappable to second information or second identification information, or

determining, using the one or more computing device processors, a period of validity associated with the information or the game information has not expired,

wherein the game-playing transaction is conducted or is to be conducted on a first communication interface, and

wherein the information associated with the game-playing transaction is received or sent on the first communication interface or a second communication interface.

98. The method of claim **97**, wherein the game-playing transaction comprises, is, or is comprised in at least one of a gaming transaction, a wagering transaction, a game initiation transaction, a game completing transaction, a pre-game transaction, a post-game transaction, an in-game transaction, a game-related transaction, a betting transaction, a location determining transaction, an identification transaction, an information processing transaction, a sports betting transaction, a user identification transaction, a crypto-based transaction, a user device identifying transaction, a mobile device identifying transaction, a game-playing apparatus-related transaction, or a game-playing apparatus identifying transaction.

99. The method of claim **97**, wherein determining, using the one or more computing device processors, the user device or the game-playing apparatus is located in the approved location associated with the game based on determining, using the one or more computing device processors, the location information or the identification information is at least partially consistent with the second information or the second identification information comprises determining, using the one or more computing device processors, the user device or the game-playing apparatus is located in the approved location associated with the game based on determining, using the one or more computing device processors, the location information is at least partially consistent with the second information or the second identification information.

100. The method of claim **97**, wherein the one or more computing device processors are comprised in at least one of the user device, the game-playing apparatus, or one or more local or remote computing apparatuses.

101. The method of claim **97**, wherein the user device comprises or is a mobile device.

102. A gaming apparatus configured for:

interacting with a user device, the interaction causing information comprised in the gaming apparatus to be received, by at least one remote server configured for operations associated with game-playing transactions, or accessed, by the at least one remote server, from the user device, the user device being located in an approved location associated with a game, the user device being associated with approved identification information or approved location information, wherein the game is associated with or comprises game information, and

wherein the at least one remote server is further configured for:

determining second information is at least partially consistent with or mappable to the information or gaming account information associated with the information, the second information being received, by the at least one remote server, or accessed, by the at least one remote server, from a second user device different from the user device;

processing the second information based on determining the second information is at least partially consistent with or mappable to the information or the gaming account information associated with the information, the information being received or accessed from the user device located in the approved location associated with the game, the interaction between the user device and the gaming apparatus occurring in the approved location associated with the game;

wherein the information associated with the interaction is received or accessed on a first communication interface, and

wherein the second information is received or accessed on a second communication interface.

103. The gaming apparatus of claim **102**, wherein at least one of the information or the second information is stored in the gaming apparatus.

104. The gaming apparatus of claim **102**, wherein the information is not visible on the gaming apparatus.

105. The gaming apparatus of claim **102**, wherein the second information is visible on the gaming apparatus.

106. The gaming apparatus of claim **102**, wherein the information is comprised in a chip or a magnetic stripe associated with the gaming apparatus.

107. The gaming apparatus of claim **102**, wherein the interaction comprises a contact-based interaction.

108. The gaming apparatus of claim **102**, wherein the interaction comprises a contactless interaction.

109. The gaming apparatus of claim **102**, wherein the second user device is located in the approved location or a second approved location.

110. The gaming apparatus of claim **102**, wherein the second user device is not located in the approved location.

111. The gaming apparatus of claim **102**, wherein the gaming apparatus comprises a physical gaming instrument.

112. The gaming apparatus of claim **102**, wherein the gaming apparatus comprises a physical gaming card.

113. The gaming apparatus of claim **102**, wherein the gaming apparatus comprises an electronic gaming card.

* * * * *