Aug. 19, 1947. D. VAWTER 2,425,848

PORTABLE FLUSHING AND FILTERING UNIT

Filed April 2, 1945 2 Sheets-Sheet 1

Fig. 1.

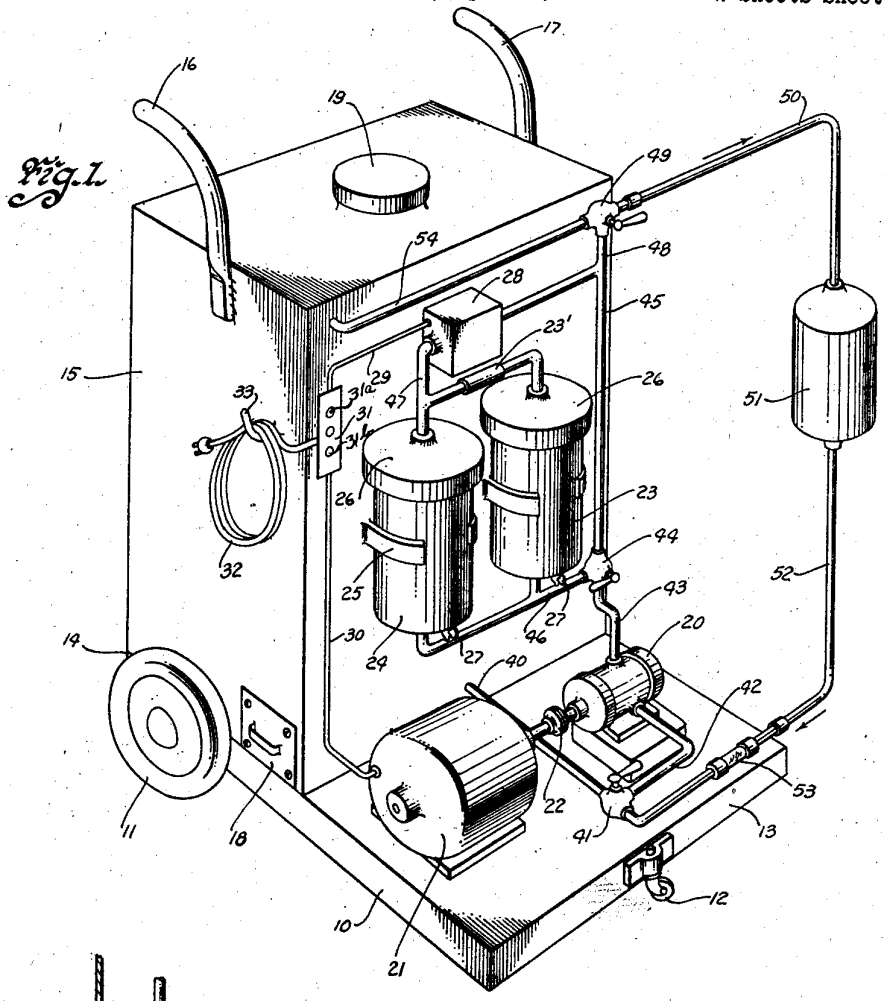

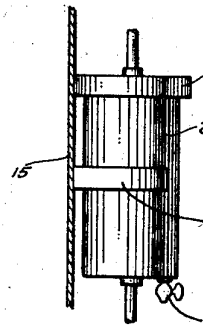

Fig. 2.

Witness
Edward P. Seeley

Inventor
Dale Vawter
By Harry L. Yunger
Attorney

Aug. 19, 1947. D. VAWTER 2,425,848

PORTABLE FLUSHING AND FILTERING UNIT

Filed April 2, 1945 2 Sheets-Sheet 2

Fig. 3.

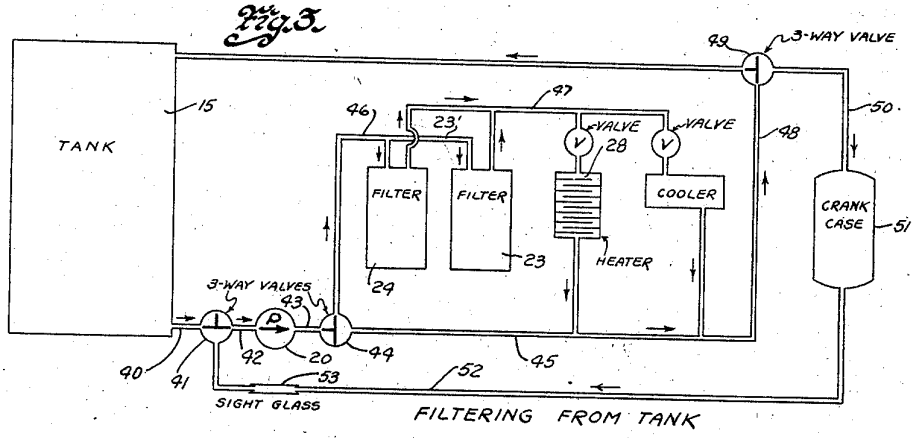

Fig. 4.

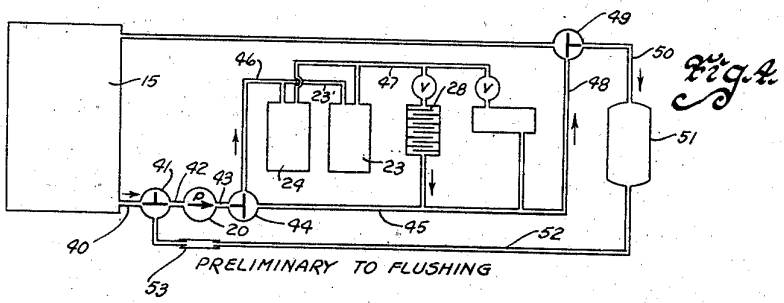

Fig. 5.

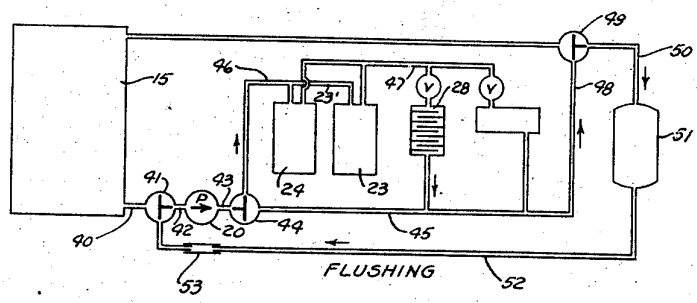

Fig. 6.

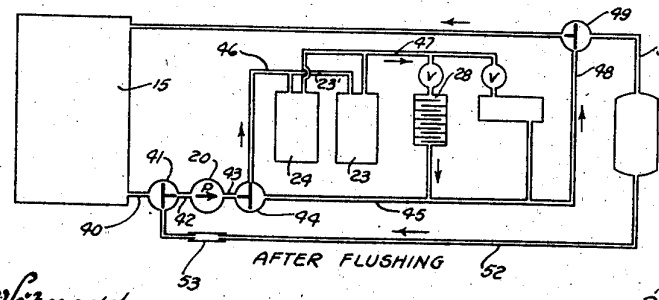

Witness
Edward P. Dealey

Inventor
Dale Vawter
by Harry L. Yunger
Attorney

Patented Aug. 19, 1947

2,425,848

UNITED STATES PATENT OFFICE

2,425,848

PORTABLE FLUSHING AND FILTERING UNIT

Dale Vawter, Greensburg, Pa.

Application April 2, 1945, Serial No. 586,083

5 Claims. (Cl. 210—62)

1

This invention relates to a compact and portable filtering unit for filtering contaminated fluids which may also be used as a flushing and filtering unit for directing a flushing oil to machinery to clean bearing surfaces and moving or working parts and then filtering the flushing oil after it has circulated through the machinery and before returning it to the machinery to remove any contaminating material from the flushing oil.

In servicing machinery and automobiles, wherein lubricant for the machinery is contained within a crankcase, sump, enclosure, housing or case, it is necessary to keep the lubricant for the machinery free from suspended material which may be abrasive to the machinery. It is also desirable to have a portable and compact unit through which any fluid having contaminating material in suspension may pass so that the contaminating material may be removed. It has been the practice, after removing lubricant from machinery, to circulate a flushing oil through the machinery to wash away any dirt or solid matter which may have collected within the machinery. It is desirable to be able to remove the collected dirt and solid matter from the flushing oil so the flushing oil may be reused, again and again.

It is one of the objects of the invention, among others, to provide an improved apparatus or unit for filtering a contaminated fluid which apparatus may also be used for flushing and cleaning machinery with a flushing oil after which the flushing oil is cleaned of contaminating material by filtering; to provide a unit that is portable and compact; to provide a unit that is readily changed from filtering alone to one where a flushing oil is forced through machinery and the flushing oil is filtered after it has passed through the machinery; to provide a light-weight, compact unit capable of being manually handled; to provide a unit that is simple in design and easy to manufacture and assemble; a unit which requires a limited amount of space for storage; a unit simple to operate which does not call for a specially skilled operator; a unit wherein the elements are easily replaceable should they wear; a unit of low initial cost; a unit wherein the elements are so arranged that the overall size of the unit is held to a minimum so as to form a highly compact unit of small size, lightweight and low cost; and a unit economical in operation.

In carrying out one use of the invention there is provided a portable and compact filtering unit for cleaning contaminated fluid, the structure of which comprises a base member having front and

2

rear portions. On the under side of the rear portion of the base member are connected wheels for rolling the unit from place to place when desired while the front portion of the base member has a support, which is out of contact with a floor surface when the unit is moved on the wheels but contacts the floor when the unit is stationary, to support the unit in a vertical position. The front support member may be a wheel member and the unit moved by pushing while it is in a vertical position. A tank is mounted on the rear of the base member to hold contaminated fluid and handles are mounted on top of the tank to serve as hand grips for an operator or operators in rolling the filtering unit from place to place on the wheels. A pump and pump actuating means are mounted on the front portion of the base member while a filter element is mounted on the front of the tank and above the pump and pump actuating means. A conduit connects the filter element with the pump; a second conduit connects the filter element to the tank and a third conduit runs from the tank to the pump to thus make a closed cycle between the tank, pump, filter element and back to the tank. The contaminated fluid need not be in the tank but could be a fluid from any source or container and conduits from the pump and filter element connect into the source or container and complete the cycle just as above for the tank.

In carrying out another use of the invention, or where a flushing and filtering operation is desired, the same structure as above is employed. The tank instead of being filled with contaminated fluid is filled with a clean flushing oil. When lubricant has been drained or removed from the machinery, and it is desired to clean the machinery, a flushing oil is forced into the machinery and circulated around to pick up any dirt or grit in the machinery. A conduit connects the tank to the pump through a three-way valve, a second conduit connects the filter element to the crankcase of machinery through a second three-way valve with a branch pipe connecting the tank with the filter element through the second three-way valve when the three-way valve is operated to close the conduit between the filter elements and the machinery. A return conduit runs from the machinery and connects into the first mentioned three-way valve, which valve is operable to connect either the tank with the pump or the return conduit with the pump.

With the foregoing and other objects in view the invention will be more fully described herein-

after and will be particularly pointed out in the claims appended hereto.

In the drawings, wherein like symbols refer to like or corresponding parts throughout the several views.

Figure 1 is a front and side view in perspective of the flushing and filtering unit.

Figure 2 is a side elevational view showing a filter element attached to the tank.

Figure 3 is a diagrammatic view of one use of the invention showing a filtering operation of contaminated fluid from the tank going through the filtering cycle.

Figure 4 is a diagrammatic view of another use of the invention showing the setting of the flushing and filtering unit preliminary to entering flushing oil from the tank into the machinery.

Figure 5 is a diagrammatic view of the same use of the invention as shown in Fig. 4 showing the setting of the flushing and filtering unit after the unit and machinery are full of flushing oil for recirculation.

Figure 6 is a diagrammatic view of the same use of the invention as shown in Fig. 4 showing the setting of the flushing and filtering unit when the flushing recirculation has been completed and the flushing oil is being returned to the tank.

Referring now to Figure 1, a portable and compact filtering and flushing unit is shown comprising a base member 10 having front and rear portions 13 and 14 respectively. To the rear portion 14 of the base member 10, on suitable axles, are attached wheels 11, one of which is seen in Figure 1, mounted on suitable ball bearings placed between the axle and wheel hub with the wheels being of a sufficient size and strength to readily support the weight of the unit and roll freely when the unit is full or empty. On the front of the base member is mounted a support member 12, which may take the form of a plain strut or maybe a caster as shown in Figure 1. The wheels 11 and the caster 12 support the unit in a vertical position when the unit is stationary. On the rear portion 14 of the base member is mounted a tank 15 of sheet steel construction welded in a well known manner having handles 16 and 17 of bent pipe of approximately ¾ inch diameter, attached to each side at the top of the tank. The handles 16 and 17 may be manually grasped, the unit tilted backward, thus supporting the whole weight of the unit on the wheels 11, with the unit rolled on the wheels 11 when a change of location is desired for the unit. The handles 16 and 17 may also be grasped by a hoist and the unit transported in this manner. The tank 15 is of a size that the bottom of the tank just fits within the dimensions of the rear portion of the base member with no overlapping of the base member. The unit weighs approximately 288 pounds when the tank 15 is empty and when the tank 15 is filled with oil, this weight increases to approximately 438 pounds. The unit is manually movable by one man when the tank 15 is full. If the distance the unit is to be moved is short and the floor smooth and even, it can be pushed on the wheels 11 and caster 12. The tank 15 has a clean-out opening 18, in the side thereof at the bottom for draining tank 15 and allowing entrance into the interior of tank for cleaning purposes at the tank bottom. On the top of the tank is projection 19 having a suitable cover, which provides an entrance into the tank 15 for admission of oil thereto, and said projection 19 also provides a member about which flexible hose members connecting the unit into machinery, may be wound when the unit is moved from place to place, to be more fully described later.

A pump 20 is mounted on the front portion 13 of the base member 10 by any suitable means such as bolting the pump to the base member 10. The pump is a positive displacement pump and one type of pump found suitable for this purpose is a Model ZFH sold by the Viking Pump Company. Suitable actuating means for the pump are provided in electric motor 21 connected to the pump 20 through suitable coupling means 22. A General Electric motor ¾ H. P., 1800 R. P. M., 110 volt A. C., 60 cycle induction motor, capacitor starter, resilient base, explosion proof, type K. C., and frame #75 has been found suitable for this purpose. It is noted that the pump actuating means could be a steam, air or hydraulic motor and that the electric motor is shown as one example of a pump actuating means. The pump 20 and motor 21 are within the confines of base member 10 with no portions of the tank, motor or pump overlapping, hence a compact structure is provided

Mounted on the front of the tank 15 and above the pump 20 and pump actuating means 21 is a filter element which in the present disclosure comprises two filter elements, 23 and 24 connected to the tank by suitable bracket members 25 as clearly shown in Figure 2. The filter elements have a cover member 26, attached to the filter element by bolts or screws so as to be removable from the filter element body. The filter elements are filled or packed with an absorbent waste material which is readily replaceable when the waste material becomes dirty and clogged. A petcock 27 is provided on the bottom of each filtering element to drain the filtering element of liquid if it becomes desirable. The two filtering elements 23 and 24 are connected together by a pipe 23^1. Two filtering elements 23 and 24 have been shown but it is to be understood one filtering element may be employed or more than two filtering elements may be used without affecting the method of operation. In the present instance two filtering elements were chosen because they lent themselves more to a compact arrangement of the unit. Another type of filter element found suitable is the Nugent filter head manufactured by the Wm. W. Nugent Co., of Chicago, Illinois, and identified as their Fig. No. 1116, LY, size No. 1R, preferably the type having duplicate filter bodies wherein one filter body can be closed off for cleaning purposes and the other filter body left in operation, until both can again be connected for filtering purposes. In this type, the head is attached to the tank and the filter body is removed for repacking and cleaning.

A heater 28 is mounted on the tank 15 to one side of the filter element and above the pump 20 and motor 21. The heater shown is an electrical resistance type heater, well known in the electrical heater art, and is for the purpose of heating oil passing through the filtering unit in order to reduce its viscosity and thus facilitate flow through the unit. Electrical conductors 29 and 30 connect into heater 28 and motor 21 respectively with both cables 29 and 30 connecting into switch panel 31 mounted on front wall of tank 15. A conductor cord 32 of substantial length is wound and hung from supporting bracket 33. When the unit has been moved to the desired location, cord 32 is plugged into a source of electrical supply. By actuation of either switch 31*a* or 31*b* or both electric current can be sup-

plied to either the heater or motor, or to both, as desired, because the heater and motor are actuated from separate switches 31*a* or 31*b* on the switch panel 31.

In some applications, cooling may be required as where a big bearing or gear case is running improperly and heating occurs. The invention contemplates also, connecting a cooler into the unit, at a user's option and need, which cooler may easily be attached in series with the heater. A cooler wherein cold water is used as the coolant has been found suitable for the purpose. It is noted that when the cooler is used it is not necessary to use the heater, hence the heater is closed off from the circulation system and flow directed to the cooler. When the heater is in use the cooler is out of the system either by closing valves or removing the cooler entirely from the unit.

The tank 15 is connected by pipe 40, three-way valve 41 and pipe 42 to pump 20, which pipes 40 and 42 combine to form a conduit running from the tank to the pump. Discharge from pump 20 passes into pipes 43 and thence to three-way valve 44, which valve 44 can be set to have the discharge of pump 20 pass through filter elements 23 and 24 or to by-pass filter elements 23 and 24. While it is an unusual occurrence when filter elements 23 and 24 are by-passed, there are occasions when it becomes desirable and three-way valve 44 can be operated to divert flow to pipe 45 around filter elements 23 and 24 and heater 28. If flow is directed to the filter elements 23 and 24, it passes through pipe 46, which pipe 46 and pipe 43 combine to form a conduit connecting pump 20 with filter elements 23 and 24. Flow leaves filter elements 23 and 24 through pipe 47 and enters heater 28. Heater 28 is controlled by switch 31*a*, hence this switch determines whether heater 28 heats any liquid passing therethrough or not. From heater 28 flow goes into pipe 48, to three-way valve 49 and thence to flexible tubing 50 or pipe 54, which pipe 54 leads to the tank 15. Flexible tubing 50 has a suitable connection with a crankcase 51 of machinery for delivering liquid to said crankcase 51 or any other lubricant container of machinery. Return flow from crankcase 51 is through flexible tubing 52, to three-way valve 41. Pipe 47, heater 28, pipe 48 and flexible tubing 50 all combine to form a conduit connecting the filter elements 23 and 24 with the crankcase 51. The flexible tubing 52 and pipe 42 combine to form a conduit between the crankcase 51 and pump 20. Further, flexible tubing 52 has a sight-glass 53 mounted in said tubing 52 to give a visual indication of flow through the tubing 52. When a stream of flushing oil is passed through hose 50 it passes through a nozzle on the end of the hose member to thus discharge a stream of high velocity and pressure, which stream may be guided by hand to be squirted around in the machinery to knock off loose dirt, etc.; or the stream may be a low-velocity, free-flowing stream for volume recirculation or a simple slow lubricating stream to flood out contaminants. The same flow rate applies for both methods.

When flexible tubing 50 and 52 are removed from crankcase 51 and it is desired to change position of the unit the tubing 50 and 52 are wound circularly about the projection 19 on top of tank 15. This allows the unit to be moved without the tubing 50 and 52 becoming fouled and also lends to the compactness of the unit.

From the foregoing description it can clearly be seen, that a unit is presented that is compact and portable; capable of being manually moved from place to place and one that takes up a minimum amount of space for storage.

Referring now to Figure 3, a diagrammatic view of flow through the unit of one use to which the apparatus may be put is shown wherein tank 15 is filled with a contaminated liquid, such as lubricating oil drained from machinery, and it is desired to filter said contaminated lubricating oil and return it to tank 15. For this operation, three-way valve 41 is set to connect pipes 40 and 42 to form a conduit between tank 15 and pump 20. Conductor 32 has been plugged into a source of electricity and switch 31*b* has been actuated to set motor 21 into operation. Pump 20 is in operation and draws liquid from tank 15 through the conduit formed by pipes 40 and 42 into pump 20. The liquid is discharged from pump 20 into pipe 43 and three way valve 44 is set to direct flow through three-way valve 44 into pipe 46. Pipes 43 and 46 and three-way valve 44 form a conduit between the pump 20 and filter elements 23 and 24. From filter elements 23 and 24, flow goes through pipe 47 to heater 28, which heater may be on or off as determined by switch 31*a*, to pipe 48. Three-way valve 49 is set to direct flow from pipe 48 into pipe 54. The pipe 47, heater 28, pipe 48 and pipe 54 all combine to form a conduit connecting the filter elements 23 and 24 with the tank 15. It can be seen that this circuit is just a circulation through the unit itself and recirculates the contaminated liquid from and returns it to tank 15 until it is finally determined to be clean.

If it is desired to use the unit to clean a contaminated liquid from some source other than tank 15, flexible tubing 52 is connected into the outlet, for instance the outlet of a crankcase of machinery, and flexible tubing 50 is connected into the inlet. Figure 5 shows the cycle of operation, namely flexible tubing 52 and pipe 42 forming a conduit from the source of contaminated liquid to the pump 20, through three-way valve 41 and sight glass 53. Flow from pump 20 is through pipe 43, three-way valve 44 and pipe 46 to filter elements 23 and 24 as previously described. From filter elements 23 and 24, a conduit between filter elements 23 and 24 and the source of contaminated liquid is formed by pipe 47, heater 28, pipe 48, through three-way valve 49 and flexible tubing 50. Circulation is continued until observation through sight-glass 53, or tests, shows that the contaminated liquid is clean.

When tank 15 is filled with a flushing oil, which term flushing oil may also include solvents alone or mixed with a flushing oil, and it is desired to use the unit to clean machinery, Figures 4, 5 and 6 show diagrammatically the different operations that take place. The machinery must first be drained of lubricant and flexible tubing 50 is connected into the inlet to the machinery and flexible tubing 52 leads away from the outlet of the machinery. Conductor 32 is plugged into a source of electricity, motor 21 is started by actuating switch 31*b* and heater 28 is turned on or left off as the operator desires, depending upon the nature of the flushing oil. It is first necessary to fill the unit and machinery with flushing oil before a circulation can be established which circulation is necessary in order to flush away contaminating material from the machinery. Figure 4 shows pipes 40 and 42 connected through three-way valve 41 to pump 20. Pump 20 draws flushing oil from tank 15 forcing it through pipe

46 to filter elements 23 and 24, pipe 47 and heater 28. The flushing oil flows through pipe 48, through three-way valve 49 which is set to connect into flexible tubing 50. Flushing oil is delivered to machinery, such as crankcase 51, from tank 15 until it is full or measured at correct level after which the flushing oil starts returning through flexible tubing 52 and fills tubing 52. When the flushing oil is observed in flexible tubing 52 by looking at sight glass 53, or measured in the crankcase, the unit and crankcase 51 are then full of flushing oil and everything is in readiness to re-circulate the flushing oil through the unit and crankcase 51.

Three-way valve 41 is then turned to join the flexible tubing 52 and pipe 42 and close off flow from the tank 15 as shown in Figure 5. Flow continues from the pump 20 to the filter elements 23 and 24 to filter any contaminating substances out of the flushing oil and return clean flushing oil to crankcase 51. The circulation continues through crankcase 51 until observation at sight-glass 53 shows that the flushing oil is returning from crankcase 51 clean, an indication that all the contaminating matter has been cleansed from the machinery or laboratory tests may be made of the returning flushing oil.

When the flushing oil returns clean, it is time to stop the cycling operation and return the flushing oil to storage in tank 15. Three-way valve 49 is then turned to disconnect pipe 43 and flexible tubing 50 and connect pipe 48 with pipe 54 leading to tank 15. Flow is then from crankcase 51, flexible tubing 52, pipe 42, pump 20, pipe 46, filter elements 23 and 24, pipe 47, heater 28, pipe 48, pipe 54 and into storage tank 15 until all flushing oil is removed from the crankcase and the unit. It is noted that the flushing oil should be returned to tank 15 cleaned and ready for re-use, hence it should be sent through filter elements 23 and 24 and not through by-pass pipe 45 when being returned to tank 15.

While the invention has been described for several uses, it is to be understood that the words which have been used are words of description rather than of limitation, and that practice of the invention within the scope of the appended claims may be resorted to without departing from the true scope of the invention in all its aspects.

I claim:

1. A compact flushing and filtering unit for flushing oil used to clean machinery comprising a base member having front and rear portions, a tank on the rear of the base member for flushing oil, a pump and pump actuating means mounted on the front of the base member, a filter element connected by a conduit with the pump, a second conduit formed by two branch pipes connected by a three-way valve running from the filter element to the machinery, a branch pipe running from the three-way valve to the tank connecting the filter element into the tank when the three-way valve is operated to close the conduit between the filter element and the machinery, a conduit formed by two branch pipes connected by a second three-way valve connecting the pump and tank, and a return conduit from the machinery connected into the second mentioned three-way valve connecting the return conduit to the pump or the tank with the pump depending upon the setting of the second mentioned three-way valve.

2. A compact flushing and filtering unit for flushing oil used to clean machinery comprising a base member having front and rear portions, a tank on the rear of the base member for flushing oil, a pump and pump actuating means mounted on the front of the base member, a filter element mounted on the front of the tank and above the pump and pump actuating means, a conduit connecting the pump and filter element, a second conduit formed by two branch pipes connected by a three-way valve running from the filter element to the machinery, a branch pipe running from the three-way valve to the tank connecting the filter element into the tank when the three-way valve is operated to close the conduit between the filter element and the machinery, a conduit formed by two branch pipes connected by a second three-way valve connecting the pump and tank, and a return conduit from the machinery connected into the second mentioned three-way valve connecting the return conduit to the pump or the tank with the pump depending upon the setting of the second mentioned three-way valve.

3. A portable and compact flushing and filtering unit for flushing oil used to clean machinery comprising a base member having front and rear portions, wheels mounted on the back portion of the base member for rolling the filtering unit from place to place when change of position is desired, a support on the front of the base member, said support and wheels supporting the filtering unit in a vertical position when the filtering unit is stationary, a tank on the rear of the base member for flushing oil, handles mounted on the tank to serve as hand grips in rolling the filtering unit from place to place on the wheels, a pump and pump actuating means mounted on the front of the base member, a filter element mounted on the front of the tank and above the pump and pump actuating means, a conduit connecting the pump and filter element, a second conduit formed by two branch pipes connected by a three-way valve running from the filter element to the machinery, a branch pipe running from the three-way valve to the tank connecting the filter element into the tank when the three-way valve is operated to close the conduit between the filter element and the machinery, a conduit formed by two branch pipes connected by a second three-way valve connecting the pump and tank, and a return conduit from the machinery connected into the second mentioned three-way valve connecting the return conduit to the pump or the tank with the pump depending upon the setting of the second mentioned three-way valve.

4. A compact flushing and filtering unit for flushing oil used to clean machinery comprising a base member having front and rear portions, a tank on the rear of the base member for flushing oil, a pump and pump actuating means mounted on the front of the base member, a filter element mounted on the front of the tank and above the pump and pump actuating means, a conduit connecting the pump and filter element, a second conduit formed by two branch pipes connected by a three-way valve running from the filter element to the machinery, a heater element mounted in and forming part of the second conduit, a branch pipe running from the three-way valve to the tank connecting the filter element into the tank when the three-way valve is operated to close the conduit between the filter element and the machinery, a conduit formed by two branch pipes connected by a second three-way valve connecting the pump and tank, and a return conduit from the machinery connected into the second

mentioned three-way valve connecting the return conduit to the pump or the tank with the pump depending upon the setting of the second mentioned three-way valve.

5. A compact flushing and filtering unit for flushing oil used to clean machinery comprising a base member having front and rear portions, a tank on the rear of the base member for flushing oil, a pump and pump actuating means mounted on the front of the base member, a filter element connected by a conduit with the pump, a second conduit running from the filter element to machinery, a branch pipe running from the second conduit to the tank, valve means operable to connect the second conduit and branch pipe to direct flow from the filter into the tank or from the filter to the machinery depending upon the setting of the valve means, a conduit connecting the pump and tank, a return conduit from the machinery connecting into the conduit between the pump and tank and valve means operable to

connect the return conduit from the machinery to the pump or the tank to the pump depending upon the setting of the valve means.

DALE VAWTER.

REFERENCES CITED

The following references are of record in the file of this patent:

UNITED STATES PATENTS

Number	Name	Date
2,065,384	Lomax	Dec. 22, 1936
1,652,423	Belke	Dec. 13, 1927
1,870,885	Alsop	Aug. 9, 1932
2,325,169	Alsop	July 27, 1943
1,951,809	Renfrew	Mar. 20, 1934
1,305,735	Morris	June 3, 1919
2,217,329	Bentley	Oct. 8, 1940
2,068,394	Burckhalter et al.	Jan. 19, 1937
2,073,026	Renfrew et al.	Mar. 9, 1937