Patent Owner's Oral Argument

PERMIAN GLOBAL INC., AND MANTICORE FUELS, LLC
Petitioners,

v.

FUEL AUTOMATION STATION, LLC,
Patent Owner.

IPR2023-01236
Patent No. 10,815,118

IPR2023-01237
Patent No. 9,586,805

IPR2023-01238
Patent No. 10,974,955

December 5, 2024
Matt Koziarz
Alex Szypa

CARLSON GASKEY OLDS

DEMONSTRATIVE EXHIBIT - NOT EVIDENCE

Opening Statement

Ex. 2012 at 17
Ex. 2011 ¶¶51-52
POR Sur-Reply at 11

- Safety and reliability
- *Safety is a chief concern*.
- Van Vliet is missing key claim elements
- Coxreels is unsafe/unreliable
- Shoap does not teach a tube and sleeve as separate and distinct structures.
- Cable is unsafe and uninformative for Van Vliet
- AFD lacks an aisle walkway

1236: Ground 1

Ground	Type	Summary
1	§§102/103	Claims 1-3 are anticipated by and/or rendered obvious by *Van Vliet*

Reason to deny: Van Vliet lacks key claim elements

Claim 1 of the '118 Patent

1. A distribution station comprising:

a mobile trailer;

a pump on the mobile trailer;

a manifold on the mobile trailer and connected with the pump;

a plurality of reels on the mobile trailer;

a plurality of flow passages, each said flow passage being connected to the manifold and running through a respective one of the reels;

a plurality of hoses, each said hose being connected with a respective one of the flow passages via a respective one of the reels;

a plurality of valves on the mobile trailer, each said valve situated between the manifold and a respective different one of the reels and being operable to control fluid flow through a respective one of the flow passages;

a plurality of fluid level sensors, each said fluid level sensor being connected or connectable with a respective different one of the hoses; and

a controller configured to operate the valves responsive to fluid level thresholds to control fluid flow to the hoses.

Key claim elements

Van Vliet Lacks Key Claim Elements

- Van Vliet:
  - No flow passage running through the reels;
  - No hoses connected with the flow passages via the reels.

- Petitioner did not meet its burden (Inst. Dec. at 8-10).

POR at 15-18

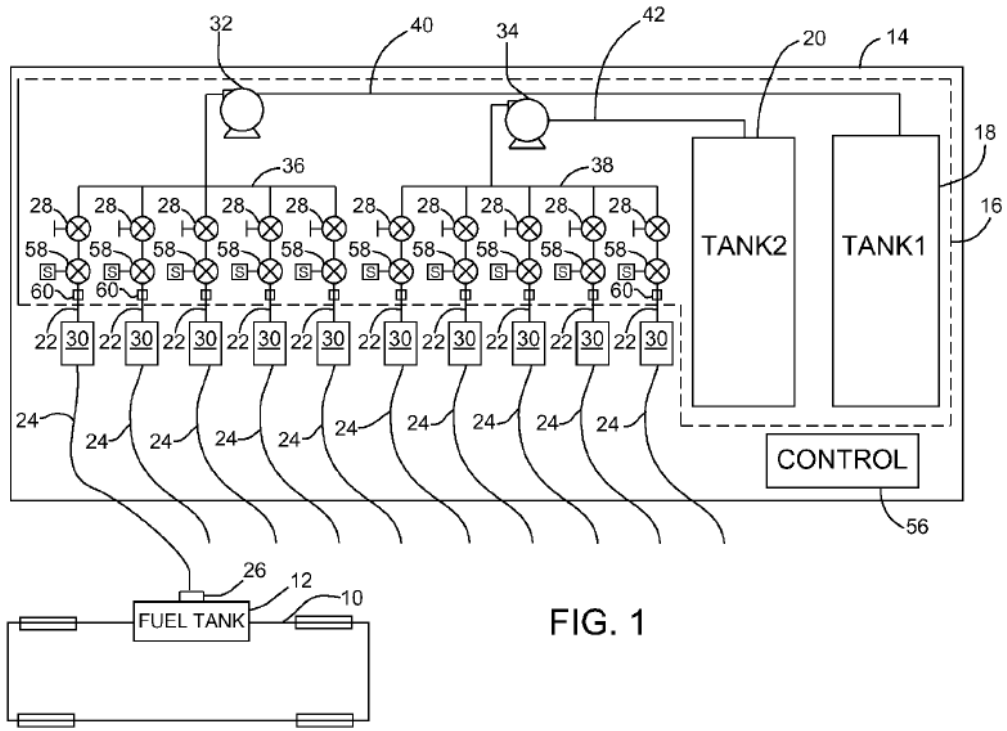

FIG. 1

Board's Findings at Institution Re: Van Vliet

- "[N]owhere do we discern where or how Van Vliet definitively discloses the flow passages as "running through" reels 30, as required by claim 1."

- "At most, the diagram indicates the hose's flow passage as *wrapping around* the reel, rather than "running through" the reel, as claimed."

- "Van Vliet's hose 24 cannot be connected to reel 30 if the ends of the hose are connected to dry connections 60 and 62, which indisputably are not part of the reel. In that case, the hose's flow passage is not capable of "running through" the reel, as required by claim 1."

Inst. Dec. at 7-9

Shift in Petitioner's Position Re:

"Flow passage … running through a respective one of the reels"

Petitioner's Position on Van Vliet in the Petition:

- "a POSITA would have understood that the reel 30 is part of the fluid stream, and, therefore, the flow passage passes through the reel."
- *Focused on fluid stream*

Petitioner's New Position on Van Vliet in the Response Brief:

- "But a hose wrapped around the reel's spindle would necessarily "run through" at least some portion of the reel's cross-sectional area."
- *Not focused on fluid stream*

Petitioner Fails to Present a Case of Obviousness

- Petitioner carries the burden of showing why the claims are unpatentable.
- Petitioner did not conduct any of the fundamental factual inquiries underlying an obviousness analysis, such as identifying any particular differences between Van Vliet and the claims at issue.
- Petitioner makes no arguments that any particular elements of claims 1-3 are obvious over Van Vliet.
- Petitioner has failed to present a *prima facie* case of obviousness.

POPR at 32-34; POR 15-18

1236: Grounds 1A and 2A

Ground	Type	Summary
1A	§103	Claims 1-3 are rendered obvious by *Van Vliet* in view of *Coxreels*
2A	§103	Claims 4-9 and 5-18 are rendered obvious by *Van Vliet* in view of *Coxreels* and *Shoap*

Reasons to deny:

- Coxreels is unsafe/unreliable
- A POSITA would not have modified Van Vliet with Coxreels

SAFETY FIRST!

- Safety and reliability (POR at 3-7)
- Safety incidents, life-threatening injuries.
- The “red zone”
- ***<u>Safety is a chief concern</u>***.

(Ex. 2047 at 20:17-23; 66:13-67:25)

Ex. 2012 at 17

Durham Testimony on Red Zone

Q. What is the red zone?

A. A red zone's an area around the high pressure pumping equipment and well heads, frac iron, things that contain high pressure where personnel are generally excluded during high pressure pumping operations at a fraction site. Kind of a colloquial term.

Q. Are there frac pumps in the red zone?

A. Yes, the operating frac pumps would be located inside the red zone.

Ex. 2047, Supplemental Tr., 66:21-67:4

Durham Testimony on Safety

Q. Would you agree that safety is a chief concern on a well site?

A. I would agree.

Ex. 2047, Supplemental Tr., 20:17-19

What Are the Grounds?

- "**Incorporating *Coxreels*' reel** into *Van Vliet*'s mobile fuel delivery system" (emphasis added).
- "**using Coxreels' reel in Van Vliet's mobile fuel delivery system**" (emphasis added);
- "combine *Coxreels*' teaching of a **specific reel** with *Van Vliet*" (emphasis added);
- "a POSITA would have needed only to **select *Coxreels*' reel** when choosing which reel to implement" (emphasis added);

See Petition at 35; POR Sur-Reply at 3-4

A POSITA Would Not Modify Van Vliet With Coxreels

- Coxreels would have been unsuited for an automated fueling station as in Van Vliet. (POR at 19-22).
  - Brass swivel: should not be used with fuel; can form deposits. (POR at 20-21; Ex. 2011 at ¶112)
  - AFLAS seal: glass transition temperature -3 °C is above minimum service temperature. (POR, at 21-22; Ex. 2011 at ¶¶127-130; Ex. 2026, 2027)

Brass Inlet

- Copper promotes fuel degradation and can produce mercaptide gels, and zinc can react with water or organic acids in fuel to form gels. These gels form deposits in downstream equipment that can plug lines, orifices, filter screens, etc. (Ex. 2011 at ¶¶123-124; Ex. 2024, Page 10; Ex. 2025)

- A POSITA would conclude that use of brass in a refueling system risks serious malfunctions and possible injury. (POR, 20-21; POR Sur-Reply, at 11-12; Ex. 2047 at 20:17-23; 66:13-67:25.)

AFLAS Seal

- Service temperature range of -5 °C to 200 °C and a glass transition temperature of -3 °C or -13 °C, depending on the exact grade. (Ex. 2011 at ¶¶127-130)

- Dr. Durham asserts fracturing operations mostly occur in warmer regions, avoiding -3°C temperatures, but offers no evidence. He acknowledges that temperatures in these regions, including South Texas, can drop below zero. (Sur-Reply at 14-15; Ex. 2047, 25:21-27:25, 28:22-25)

- The benefits, both lost and gained, should be weighed against one another, and the prior art must be considered for all its teachings, not selectively. *Henny Penny Corp. v. Frymaster LLC*, 938 F.3d 1324, 1332 (Fed. Cir. 2019)

A POSITA Would Not Modify Van Vliet With Coxreels

- Coxreels would provide an undesirable and unsafe operating configuration (POR at 18-24).
  - "Safety is a chief concern" (Ex. 2047, Supplemental Tr., 20:17-19)
  - "Redline" operating configuration (POR at 22-27).
  - Limit system pressure and number of hoses "open" at one time (POR at 24).

Ex. 2012 at 17

Petitioner Subsequently Attempts to Shift the Grounds

- Petitioner argues for the incorporation of Coxreels' flow passages instead of the initially asserted incorporation of Coxreels' reel. (Petition at 35-36; Petitioner's Reply at 7-8)

- This shift is prejudicial to the PO because it alters the scope of the challenge without allowing for PO to submit new evidence and testimony. (POR Sur-Reply at 6)

- The shifted ground has no basis.
  - Van Vliet generally discloses reels, but no structure of the reels and thus no basis for incorporating a flow passage into that unknown structure. (POR Sur-Reply at 5)
  - If the ground is not based on incorporating the entire Coxreels reel, the ground is unclear because the Petition fails to explain what reel structure is present in Van Vliet to modify with a flow passage. (POR Sur-Reply at 5-6)

- Shift does not change that Coxreels would provide an undesirable and unsafe operating configuration. (POR at 22)

1236:Grounds 2 and 2A

Ground	Type	Summary
2	§103	Claims 4-18 are rendered obvious by *Van Vliet* in view of *Shoap*
2A	§103	Claims 4-9 and 5-18 are rendered obvious by *Van Vliet* in view of *Coxreels* and *Shoap*

- **Reasons to deny**:
  - Shoap does not teach a tube and sleeve as separate and distinct structures.
  - Petitioner's design choice shortcut lacks reason and is unsafe.

Claim Construction

- Claim 5: “a tube and a sleeve that circumscribes the tube”
  - Presumption of separate and distinct structures (Inst. Dec. at 6)
  - Board at Institution: “the only reasonable construction of the claim language, in light of the specification, is that claims 5, 10, and 15 assume physically separate structures for the claimed ‘tube’ and ‘sleeve.’” (Inst. Dec. at 8)
  - ‘118 Patent only describes the tube and sleeve as separate and distinct structures (POR at 12-15)

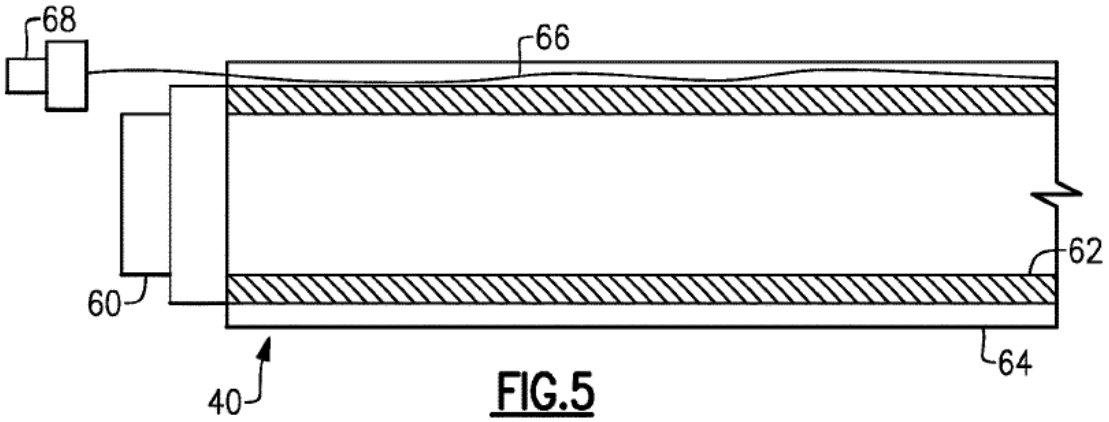

FIG.5

[‘118 Patent]

Disclosure of Shoap

- Shoap: single structure (conduit 100).

- Petitioner: design choice shortcut
  - two thinner concentric conduits
    - No reason
    - ***NOT SAFE***!

(POR at 27-30; PO Sur-Reply at 19; Ex. 1006)

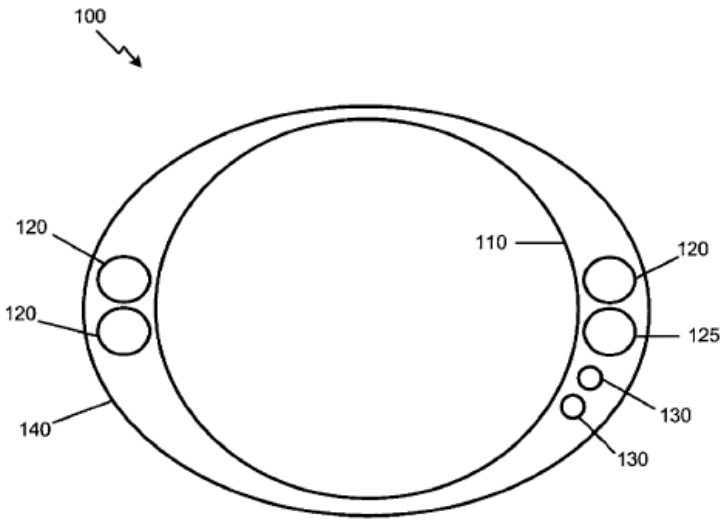

FIG. 1A

[Shoap]

Claim 7

- Claim 7: “a plurality of connectors, each of the connectors being mounted on a respective different one of the reels and each of the connectors receiving a respective different one of the sensor communication lines.”
- Petitioner relies on Shoap’s slip ring (Ex. 1003, ¶192), but denies such reliance.
  (Petitioner’s Reply to POR at 19)
- What connector does the ground rely on?
- Petitioner has improperly used “design choice” as a surrogate for this claim feature.
- ***NOT SAFE***!
- No reason
- Impermissible hindsight

  (See POR at 31-32; POR Sur-Reply at 20)

Claim 11

- Claim 11: “the sleeve is a fabric sleeve”
- Shoap does not disclose a separate sleeve, let alone a separate fabric sleeve.
- Shoap: yet another design choice shortcut to add a fabric sleeve that does not exist in Shoap.
  - Desihose: is a fuel injection hose
  - Rhino Sleeve: is not prior art
- “It does not suffice to simply be known. A reason for combining must exist.” *Virtek Vision Int'l v. Assembly Guidance Sys*., 97 F.4th 882, 888 (Fed. Cir. 2024)

See POR at 32-24; POR Sur-Reply at 21

1237:Ground 2

Ground	Type	Summary
2	§102/103	Claims 17 and 18 are anticipated and/or rendered obvious by *Vliet*

<u>Reason to deny</u>:

- Van Vliet fails to disclose or suggest an aisle walkway or hoses deployable from opposing sides.

Claims 17 and 18

Claims 17 and 18 require:

1. Hoses deployable out of both sides of the trailer (17[h])
2. Reels arranged on opposed sides in the trailer with an aisle walkway (18)

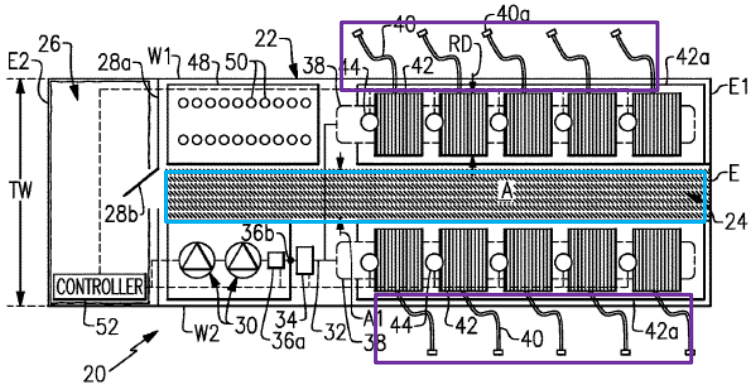

FIG.2

17. A distribution station comprising:

a mobile trailer;

a pump on the mobile trailer;

first and second manifolds on the mobile trailer and fluidly connected with the pump;

a plurality of reels on the mobile trailer;

a plurality of hoses connected, respectively, with the reels, wherein a portion of the reels are connected with the first manifold and another portion of the reels are connected with the second manifold;

a plurality of valves on the mobile trailer, each of the valves situated between one of the first or second manifolds and a respective different one of the hoses; and

a plurality of fluid level sensors, each of the fluid level sensors being associated a respective different one of the hoses,

wherein the mobile trailer includes first and second opposed trailer side walls, and a first group of the hoses are deployable from the first trailer side wall and a second group of the hoses are deployable from the second trailer side wall.

18. The distribution station as recited in claim **17**, wherein the reels are arranged on first and second opposed sides in the mobile trailer such that there is an aisle walkway down the middle of the mobile trailer.

Ground 2: Claims 17 and 18

- Van Vliet does not disclose or suggest either feature (17[h] or 18) (POR at 6, 22-23)

- Petitioner: “most obvious” arrangement. (Petition at 48)
  - This is impermissible hindsight. (POR at 22-23)
    - Arbitrary, self-serving analysis; conclusory. (POR at 22-23)

- Petitioner Reply: Shifts basis
  - one of a limited number of arrangements to choose from. (Petitioner Reply at 10)
  - Petitioner fails to articulate how there are a limited number of arrangements. (PO Sur-Reply at 9-10)

Claim 18

Claim 18 is challenged on the following grounds:

- Ground 1 (103: Van Vliet in view of Cable)
- Ground 2 (102/103: Van Vliet)
- Ground 5 (103: Van Vliet in view of AFD)

None of these grounds meet all limitations of claim 18 (POR, at 6, 17-21, 33-38)

Claim 18

Ground 1 (103: Van Vliet in view of Cable)

- Fails because Neither Van Vliet nor Cable discloses or renders obvious hoses deployed out of both sides of the trailer

(POR, 17-21; POR Sur-Reply 5-6; Ex. 2012, 109:24-110:3)

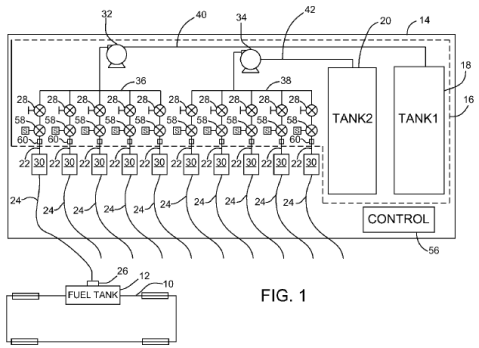

FIG. 1

Van Vliet

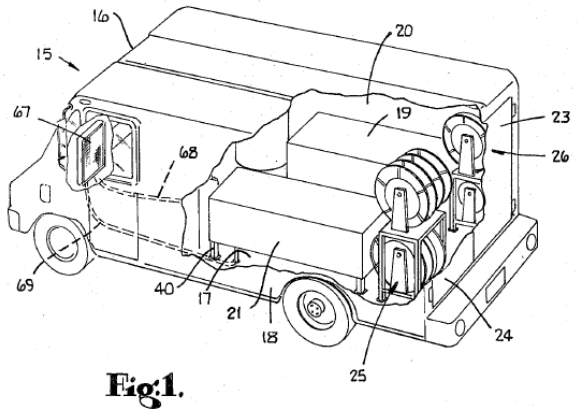

Fig.1.

Cable

17. A distribution station comprising:
a mobile trailer;
a pump on the mobile trailer;
first and second manifolds on the mobile trailer and fluidly connected with the pump;
a plurality of reels on the mobile trailer;
a plurality of hoses connected, respectively, with the reels, wherein a portion of the reels are connected with the first manifold and another portion of the reels are connected with the second manifold;
a plurality of valves on the mobile trailer, each of the valves situated between one of the first or second manifolds and a respective different one of the hoses; and
a plurality of fluid level sensors, each of the fluid level sensors being associated a respective different one of the hoses,
wherein the mobile trailer includes first and second opposed trailer side walls, and a first group of the hoses are deployable from the first trailer side wall and a second group of the hoses are deployable from the second trailer side wall.

18. The distribution station as recited in claim 17, wherein the reels are arranged on first and second opposed sides in the mobile trailer such that there is an aisle walkway down the middle of the mobile trailer.

Claim 18

Ground 2 (102/103: Van Vliet)

- Fails because Van Vliet does not disclose or render obvious hoses deployed out of both sides of the trailer or an aisle walkway

(POR, at 6, 17-21, 38)

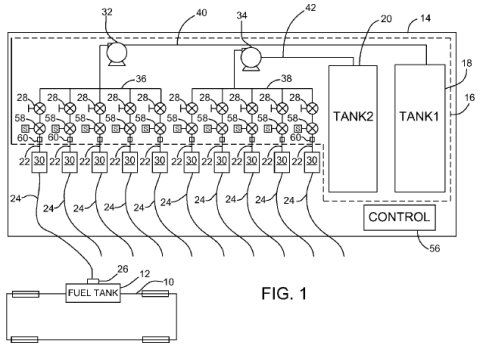

FIG. 1

Van Vliet

17. A distribution station comprising:
a mobile trailer;
a pump on the mobile trailer;
first and second manifolds on the mobile trailer and fluidly connected with the pump;
a plurality of reels on the mobile trailer;
a plurality of hoses connected, respectively, with the reels, wherein a portion of the reels are connected with the first manifold and another portion of the reels are connected with the second manifold;
a plurality of valves on the mobile trailer, each of the valves situated between one of the first or second manifolds and a respective different one of the hoses; and
a plurality of fluid level sensors, each of the fluid level sensors being associated a respective different one of the hoses,
wherein the mobile trailer includes first and second opposed trailer side walls, and a first group of the hoses are deployable from the first trailer side wall and a second group of the hoses are deployable from the second trailer side wall.

18. The distribution station as recited in claim **17**, wherein the reels are arranged on first and second opposed sides in the mobile trailer such that there is an aisle walkway down the middle of the mobile trailer.

Claim 18

Ground 5 (103: Van Vliet in view of AFD)

- Fails because neither Van Vliet nor AFD discloses or renders obvious an aisle walkway (POR at 33-38; Sur-Reply at 17-19)
- Dr. Durham admitted that one cannot see the reels in AFD, and, even if one assumed AFD did have hoses coming out both sides of the trailer, it would not necessitate a walkway (POR at 33-38; EX. 2012, 56:16-18; 58:1-3).

AFD

17. A distribution station comprising:

a mobile trailer;

a pump on the mobile trailer;

first and second manifolds on the mobile trailer and fluidly connected with the pump;

a plurality of reels on the mobile trailer;

a plurality of hoses connected, respectively, with the reels, wherein a portion of the reels are connected with the first manifold and another portion of the reels are connected with the second manifold;

a plurality of valves on the mobile trailer, each of the valves situated between one of the first or second manifolds and a respective different one of the hoses; and

a plurality of fluid level sensors, each of the fluid level sensors being associated a respective different one of the hoses,

wherein the mobile trailer includes first and second opposed trailer side walls, and a first group of the hoses are deployable from the first trailer side wall and a second group of the hoses are deployable from the second trailer side wall.

18. The distribution station as recited in claim **17**, wherein the reels are arranged on first and second opposed sides in the mobile trailer such that there is an aisle walkway down the middle of the mobile trailer.

1237: Grounds 1, 3, and 4

Ground	Type	Summary
1	§103	Claims 1-22 are rendered obvious by *Vliet* in view of *Cable*
3	§103	Claims 9-10 are rendered obvious by *Vliet* in view of *Cable* and *AFD*
4	§103	Claims 4, 11, 12, and 20 are rendered obvious by *Vliet* in view of *Cable* and *Coxreels*

Reasons to deny:

- Unsupported rationale to combine
- Cable not informative of a practical arrangement for Van Vliet
- UNSAFE!

Petitioner's Rationale for Combining

- Petition: "a POSITA would have recognized the benefits *Cable*'s arrangement so that reel [sic] equipment on one side of the well (*e.g.*, the passenger's side of the vehicle) are fed from reels on the same side of the vehicle, while equipment on the other side of the well is fed from reels on the opposite side of the vehicle." (Petition at 23)
- Neither Van Vliet nor Cable teach this. (POR at 17-21)
  - Cable: hoses deploy from rear (Ex. 2012, 109:24-110:3)
  - Van Vliet: hoses all on one side

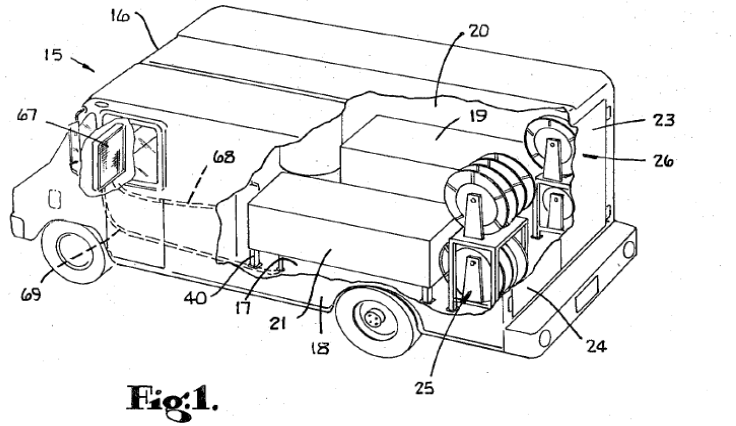

Fig.1.

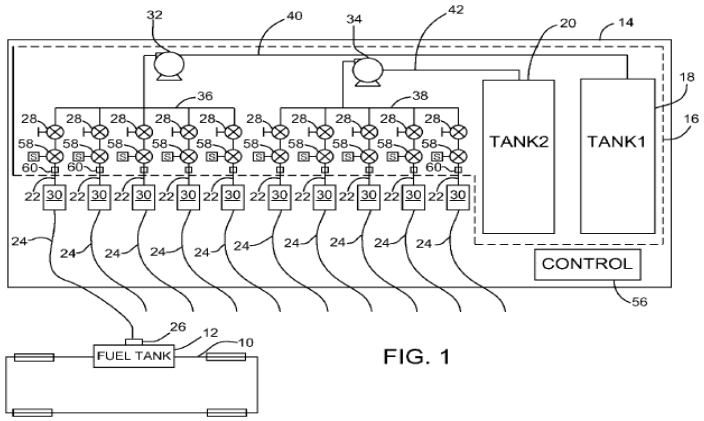

FIG. 1

Cable Not Informative of a Practical Arrangement for Van Vliet

- Why does a practical arrangement matter?
- The grounds require incorporation of Cable's physical arrangement. (POR Sur-Reply at 4)
  - Petition: "Although *Vliet* does not detail the ***physical arrangement*** of all components in its trailer, *Cable* does." (Petition at 22)
  - Petition: spatial orientation "will depend on space requirements." (Petition at 35)

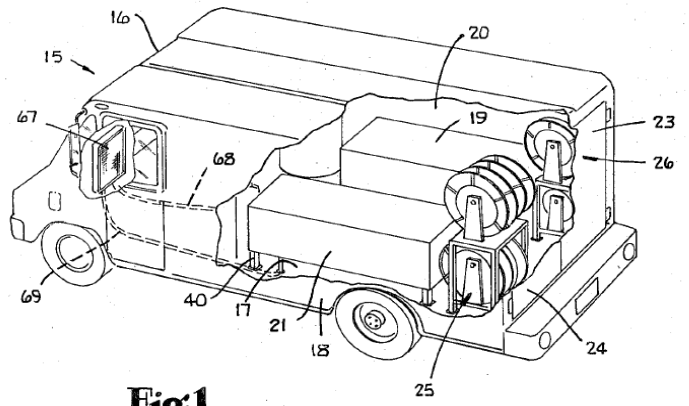

Fig.1.

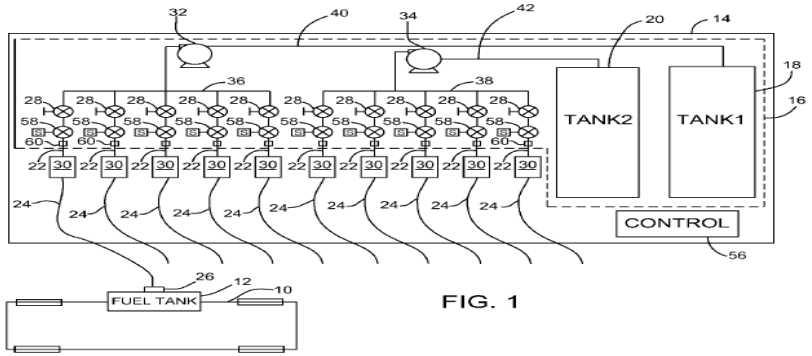

FIG. 1

Cable Not Informative of a Practical Arrangement for Van Vliet

- Cable's arrangement is for roadside service.
  - A POSITA would have been discouraged from looking to Cable for a physical arrangement in Van Vliet. (POR at 9-13)
- Would impede access for maintenance/repair. (POR at 14-17; Ex. 2004, ⁋118-119)
- Not more easily traversable.
  - Two reels across from each other on opposed sidewalls, oriented as in Cable, would take up at least 83 inches of the trailer width, leaving only 13 inches for an "aisle." (POR at 16)
  - **UNSAFE**! Would not meet the OSHA safety requirement. (POR at 6)
- Cable's walkway is a storage area. (POR at 21-22)

Claim 17

- Ground 1 as to claim 17 does not rely on or involve Cable, but rather explicitly relies on Ground 2 (anticipated and/or rendered obvious by Van Vliet alone*).*
- Petition at 46: "For the same reasons explained below for Ground 2, *Vliet* renders obvious Claim 17. *See infra* §VII.B.1."

<u>Reason to deny (Ground 2 above)</u>: Van Vliet fails to disclose or suggest an aisle walkway or hoses deployable from opposing sides.

1237: Grounds 4, 7, and 8

Ground	Type	Summary
4	§103	Claims 4, 11, 12, and 20 are rendered obvious by *Vliet* in view of *Cable* and *Coxreels*
7	§103	Claims 4, 5, 20, and 21 are rendered obvious by *Vliet* in view of *AFD*, *Lowrie*, and *Coxreels*
8	§103	Claims 11 and 12 are rendered obvious by *Vliet* in view of *AFD* and *Coxreels*

- **Reasons to deny**:
- Coxreels is unsafe/unreliable
- A POSITA would not have modified Van Vliet with Coxreels
- [See slides above Re: 1236: Grounds 1A and 2A]

1237: Grounds 5-8

Ground	Type	Summary
5	§103	Claims 1, 7-10, 13-18, and 22 are rendered obvious by *Vliet* in view of *AFD*
6	§103	Claims 2-3, 6, and 19 are rendered obvious by *Vliet* in view of *AFD* and *Lowrie*
7	§103	Claims 4, 5, 20, and 21 are rendered obvious by *Vliet* in view of *AFD*, *Lowrie*, and *Coxreels*
8	§103	Claims 11 and 12 are rendered obvious by *Vliet* in view of *AFD* and *Coxreels*

Reasons to deny:

- AFD reference inconclusive
- AFD lacks aisle walkway

AFD No Hoses From Both Sides

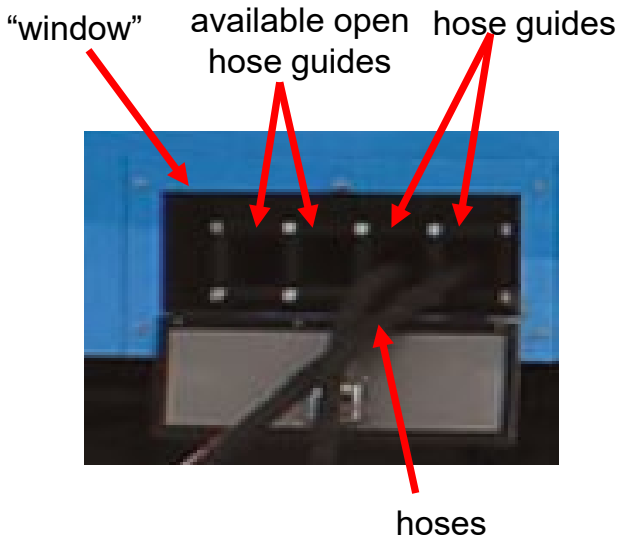

- AFD does not definitively disclose hoses deployed form both sides. (POR at 33-36)
  - AFD photograph: both sides not visible
  - Hose guides indicative of deployment of all of the hoses from one side. (POR at 33-36)

AFD Has No Aisle Walkway

- Petitioner: AFD “must” have an aisle walkway. (Petition at 65)
  - Inherency requires feature necessarily be present. (POR at 36-37)
  - Dr. Durham admitted that the hoses in AFD do not necessitate that there be two rows or reels or that there would be an aisle. (Ex. 2012 at 56-57)

- Aisle walkway not obvious from Van Vliet. See Ground 2 discussion above.

AFD Reference Inconclusive

- AFD lacks sufficient description to disclose an aisle walkway or hoses deployed from both sides of the unit.
- Petitioner's expert admitted that AFD's arrangement does not necessitate an aisle walkway, even if assuming hoses deployed from both sides.
- Petitioner's allegations are speculative and lack factual basis.

Claims 7-10

- Claim 7: "wherein the mobile trailer includes trailer end wall that has an outside door, an inside wall that defines *first and second compartments in the mobile trailer*, the outside door opening into the first compartment, and at least the manifolds and the reels are in the first compartment" (Ex. 1001 at 29)

- No *prima facie* case. (POR at 38-39)
  - Petitioner fails to explain how AFD flap is considered to be a door in an endwall of the trailer.
  - Petitioner provides no analysis on claimed "inside wall that defines first and second compartments in the mobile trailer."
  - Petitioner fails to explain how the control room is "in the mobile trailer."

Claims 17, 18, 22 (Ground 5)

AFD does not disclose or suggest either feature (17[h] or 18)

(POR at 33-38; EX. 2012, 56:16-18; 58:1-3)

(AFD)

17. A distribution station comprising:

a mobile trailer;

a pump on the mobile trailer;

first and second manifolds on the mobile trailer and fluidly connected with the pump;

a plurality of reels on the mobile trailer;

a plurality of hoses connected, respectively, with the reels, wherein a portion of the reels are connected with the first manifold and another portion of the reels are connected with the second manifold;

a plurality of valves on the mobile trailer, each of the valves situated between one of the first or second manifolds and a respective different one of the hoses; and

a plurality of fluid level sensors, each of the fluid level sensors being associated a respective different one of the hoses,

wherein the mobile trailer includes first and second opposed trailer side walls, and a first group of the hoses are deployable from the first trailer side wall and a second group of the hoses are deployable from the second trailer side wall.

18. The distribution station as recited in claim **17**, wherein the reels are arranged on first and second opposed sides in the mobile trailer such that there is an aisle walkway down the middle of the mobile trailer.

1238: Ground 1

Ground	Type	Summary
1	§§102/103	Claims 1 and 11-12 are anticipated and/or rendered obvious by *Van Vliet*

Reasons to deny:

- Anticipation analysis misses claim features
- Van Vliet Hose is not connected with the reels
- Petitioner's design choice is an unsupported afterthought

Van Vliet Does Not Anticipate

- No anticipation: Petitioner misses features of claims 1[e], 11[d], and 19[e]. (POR 17-18)
- Van Vliet does not have the features of claims 1[e] and 11[d].
  - Claim 1[e]: "reels are connected to be fed from the first manifold and another portion of the reels are connected to be fed from the second manifold;"
  - Claim 11[d]: "each said reel individually connected with the at least one manifold"
    - Patent drawings are not working drawings. Van Vliet figures are high-level representations not intended to depict the physical appearance or form. (POR at 18-19)
    - Van Vliet: "each hose 24 is connected to a fuel outlet 22 by a dry connection 60 and to a cap 26 by a dry connection 62." (Ex. 1004 at [0022]; Ex. 2011 at ¶¶106-107)

Claim Construction

- Claims 1[e], 11[e] and 19[f]: “hose connected with a different one of the reels” should be construed to mean that an end of the hose is coupled to the reel, as opposed to the hose being wound on the reel.
  - ‘“wound” and “connect” have different meanings in ‘955 Patent. (POR at 14-15)
- Van Vliet does not have the “hose connected with a different one of the reels.”
  - Van Vliet considers his hose to be connected when the end of the hose is coupled to another component (connections 60/62).
    - Van Vliet: “each hose 24 is connected to a fuel outlet 22 by a dry connection 60 and to a cap 26 by a dry connection 62.” (POR at 20; Ex. 1004 at [0022]; Ex. 2011 at ¶¶111-112)

Van Vliet Does Not Render Obvious

- No obviousness
  - Petitioner does not sufficiently explain “design choice.” (POR at 21-22)
    - Petitioner mentions “design choice” only in footnote 6, without any explanation of how it applies to the claim features or Van Vliet.
  - Petitioner’s conclusory statement does not support the ground.
  - Petitioner shifts to “finite number of solutions.” (POR Sur-Reply at 6)
    - No reason to pursue either “solution”
    - The alleged “problem” lacks basis and does not state a problem.

Board's Findings at Institution Re: Van Vliet

- "The hose's flow passage does not run through the reel, and thus the reels 30 are not connected to be fed from a manifold, as required by claim 1."
- "The Petition does not sufficiently identify how Van Vliet teaches or suggests the limitations of independent claim 1."
- "The Petition fails to show how claim 11 and its dependent, claim 12, would be anticipated by or rendered obvious over Van Vliet."

(Inst. Dec. at 11-12)

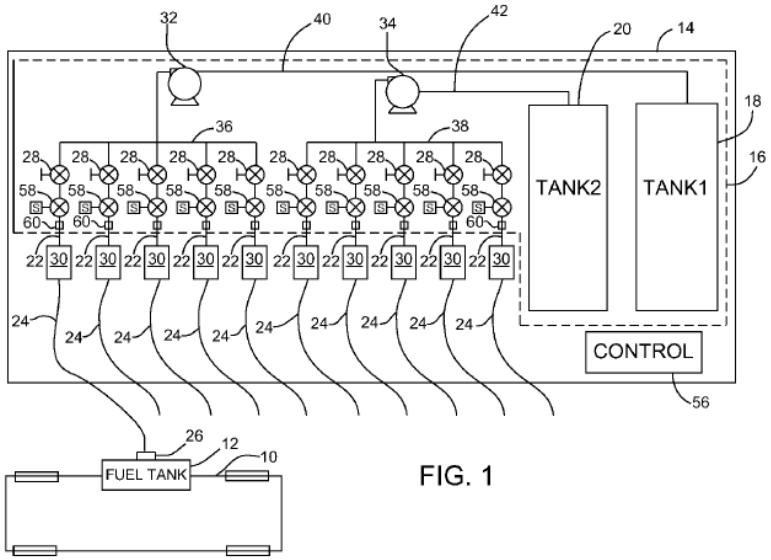

FIG. 1

1238: Ground 2

Ground	Type	Summary
2	§103	Claims 1-5 and 11-12 are rendered obvious by *Van Vliet* in view of *Cable*

Reasons to deny:

- No rationale/motivation to combine Cable's reels and connections
- Petitioner's shifted argument is without basis

No Rationale/Motivation for Combining Cable's Reels and Connections

- Petitioner's reliance on Cable:
  i. a manifold connected with or through reels (with regard to claims 1[e] and by interdependence 11[e]), and
  ii. an aisle walkway and reels on opposing sides of the walkway (with regard to claims 2-5). Petition at 33-38.
- No Rationale/motivation for combining Cable's reels and connections into Van Vliet. POR at 22-23.
- Merely being known does not suffice. See Slides above Re Coxreels under 1236 Ground 1A and 2A. POR 23-32.

Petitioner's Shift On Van Vliet + Cable

- Petitioner shifts to "finite number of solutions." (Petitioner Reply to POR at 13)
  - The alleged "problem" lacks basis and does not state a problem. (POR Sur-Reply at 8)
  - Merely being known does not suffice. (POR Sur-Reply at 8)
- See also discussion of Van Vliet + Cable above under 1237 Grounds 1, 3, and 4.
  - Would impede access for maintenance/repair. (POR at 36-40; Ex. 2011 at ¶¶176-177)
  - Not more easily traversable.
    - Two reels across from each other on opposed sidewalls, oriented as in Cable, would take up at least 83 inches of the trailer width, leaving only 13 inches for an "aisle." (POR at 39)

1238: Grounds 3 and 3A

Ground	Type	Summary
3	§103	Claims 6-10 and 14-20 are rendered obvious by *Van Vliet* in view of *LCR I* and/or *LCR II*
3A	§103	Claims 6-10 and 14-20 are rendered obvious by *Van Vliet* in view of *Cable* and *LCR I* and/or *LCR II*

Note:

Ground 3 is dependent on Ground 1.

Ground 3A is dependent on Ground 2

Reasons to deny:

- No account for claimed register location

No Account For Claimed Register Location

- Fails to account for the claimed register location in claim 19[d]. (POR at 42-44)
  - No explanation or support for installing register *directly* downstream of the pump.
  - A register could be located elsewhere.

19. A distribution station comprising:

a container including first and second opposed side walls that join first and second opposed end walls;

at least one pump in the container;

at least one manifold in the container and fluidly connected with the at least one pump;

a register between the at least one pump and the at least one manifold;

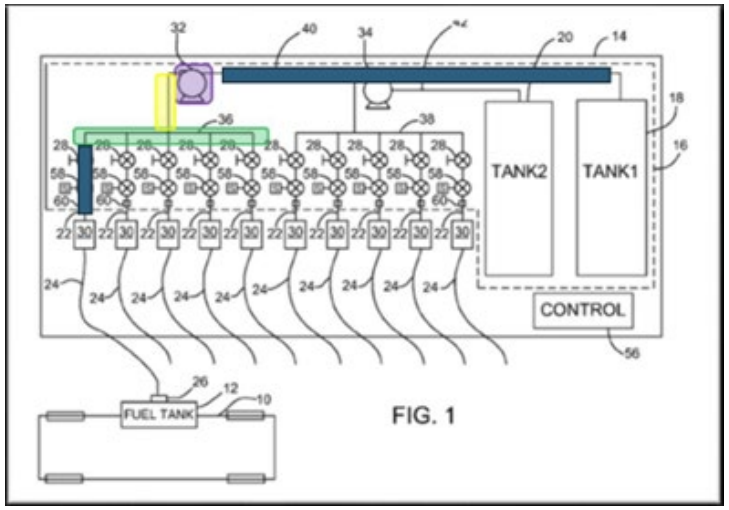

FIG. 1

1238: Grounds 4 and 4A

Ground	Type	Summary
4	§103	Claims 13 is rendered obvious by *Van Vliet* in view of *DeFosse*
4A	§103	Claims 13 is rendered obvious by *Van Vliet* in view of *Cable* and *DeFosse*

Reasons to deny:

- Insufficient rationale and motivation

Insufficient Rationale/Motivation

- Insufficient rationale and motivation. (POR at 44-48)
  - Must be a reason to combine.
  - Both have pumps.
    - Over-generalization of Van Vliet for pumping fluids in general.
    - Not “related context”
- Claim 13: “two pumps are arranged in fluid series”
  - Lacks factual basis. (POR at 47-48)
- POSITA would not have been motivated to combine.
  - DeFosse’s pumps serve to mix hydraulic frac fluid, move water/polymer mixture, and inject mixture into the well.
  - Van Vliet’s pump serves to handle fuel.

SECONDARY CONSIDERATIONS

Secondary Considerations

- **Industry Recognition**: The patented technology, embodied in PO's FAS unit, has received industry praise for its safety improvements.
- **Commercial Success**: The FAS unit has achieved widespread use, delivering millions of gallons of fuel on well sites across the US and internationally. This demonstrates market acceptance and demand for the patented invention.
- **Licensing**: Fuel Automation Station has granted a license for the use of its patented technology, further supporting its value and non-obviousness.
- **Copying**: Petitioner itself, along with other entities, have copied the claimed configuration, as evidenced by their own patent filings and commercial offerings (See, e.g., 1236 POR at 34-40)

Atlas Oil's Rick Shock Named "Industry Leader" At Texas Oil and Gas Awards

Reference Slides

IPR2023-01236
Patent No. 10,815,118

Ground	Type	Summary
1	§§ 102/103	Claims 1-3 are anticipated by and/or rendered obvious by *Van Vliet.*
1A	§ 103	Claims 1-3 are rendered obvious by *Van Vliet* in view of *Coxreels*
2	§ 103	Claims 4-18 are rendered obvious by *Van Vliet* in view of *Shoap*
2A	§ 103	Claims 4-9 and 15-18 are rendered obvious by *Van Vliet* in view of *Coxreels* and *Shoap*
3	§ 103	Claims 12-13 are rendered obvious by *Van Vliet* in view of *Shoap* and *Hosecraft*

Petition at 5

Claim	Asserted Ground: Prior Art
Independent claim 1	Ground 1: §103 Van Vliet alone Ground 1A: §103 Van Vliet + Coxreels
Independent claim 10	Ground 2: §102/103 Van Vliet + Shoap
Independent claim 15	Ground 2: §102/103 Van Vliet + Shoap Ground 2A: §102/103 Van Vliet + Coxreels + Shoap

POPR at 27

IPR2023-01236
Independent Claims Patent No. 10,815,118

1. A distribution station comprising:
a mobile trailer;
a pump on the mobile trailer;
a manifold on the mobile trailer and connected with the pump;
a plurality of reels on the mobile trailer;
a plurality of flow passages, each said flow passage being connected to the manifold and running through a respective one of the reels;
a plurality of hoses, each said hose being connected with a respective one of the flow passages via a respective one of the reels;
a plurality of valves on the mobile trailer, each said valve situated between the manifold and a respective different one of the reels and being operable to control fluid flow through a respective one of the flow passages;
a plurality of fluid level sensors, each said fluid level sensor being connected or connectable with a respective different one of the hoses; and
a controller configured to operate the valves responsive to fluid level thresholds to control fluid flow to the hoses.

10. A distribution station comprising:
a mobile trailer;
a pump on the mobile trailer;
a manifold on the mobile trailer and connected with the pump;
a plurality of reels on the mobile trailer;
a plurality of hoses, each said hose being connected with the manifold and each said hose including a tube and a sleeve that circumscribes the tube;
a plurality of valves on the mobile trailer, each said valve situated between the manifold and a respective different one of the hoses and being operable to control fluid flow from the manifold to the respective different one of the hoses;
a plurality of fluid level sensors, each said fluid level sensor being connected or connectable with a respective different one of the hoses; and
a controller configured to operate the valves responsive to fluid level thresholds to control fluid flow to the hoses.

15. A distribution station comprising:
a mobile trailer including a pump, a manifold connected with the pump, reels, flow passages connected to the manifold and running through the reels, hoses connected with the flow passages via the reels and each of the hoses including a tube and a sleeve that circumscribes the tube, valves situated between the manifold and the reels and operable to control fluid flow through the flow passages, fluid level sensors connected or connectable with the hoses, and a controller configured to operate the valves responsive fluid level thresholds to control fluid flow to the hoses.

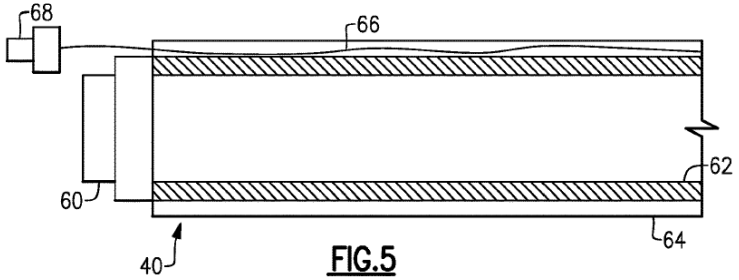

FIG.5

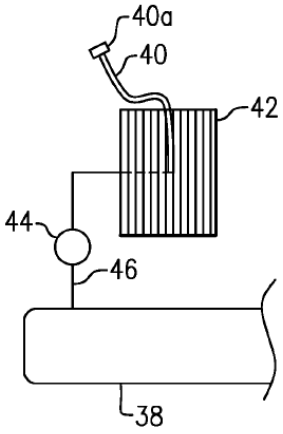

FIG.4

IPR2023-01237
Patent No. 9,586,805

Ground	Type	Summary
1	§103	Claims 1-22 are rendered obvious by *Vliet* in view of *Cable*
2	§102/103	Claims 17 and 18 are anticipated and/or rendered obvious by *Vliet*
3	§103	Claims 9-10 are rendered obvious by *Vliet* in view of *Cable* and *AFD*
4	§103	Claims 4, 11, 12, and 20 are rendered obvious by *Vliet* in view of *Cable* and *Coxreels*
5	§103	Claims 1, 7-10, 13-18, and 22 are rendered obvious by *Vliet* in view of *AFD*
6	§103	Claims 2-3, 6, and 19 are rendered obvious by *Vliet* in view of *AFD* and *Lowrie*
7	§103	Claims 4, 5, 20 and 21 are rendered obvious by *Vliet* in view of *AFD*, *Lowrie*, and *Coxreels*
8	§103	Claims 11 and 12 are rendered obvious by *Vliet* in view of *AFD* and *Coxreels*

Petition at 5

Claim	Asserted Ground: Prior Art
Independent claim 1	Ground 1: §103 Van Vliet + Cable + design choice Ground 5: §103 Van Vliet + AFD
Independent claim 17	Ground 1: relies on Ground 2 Ground 2: §102/103 Van Vliet alone Ground 5: §103 Van Vliet + AFD

POPR at 16

IPR2023-01237
Independent Claims Patent
No. 9,586,805

1. A distribution station comprising:

a mobile trailer;

a pump on the mobile trailer;

first and second manifolds on the mobile trailer and fluidly connected with the pump;

a plurality of reels on the mobile trailer;

a plurality of hoses connected, respectively, with the reels, wherein a portion of the reels are connected with the first manifold and another portion of the reels are connected with the second manifold;

a plurality of valves on the mobile trailer, each of the valves situated between one of the first or second manifolds and a respective different one of the hoses; and

a plurality of fluid level sensors, each of the fluid level sensors being associated a respective different one of the hoses,

wherein the reels are arranged on first and second opposed sides in the mobile trailer, with an aisle walkway down the middle of the mobile trailer.

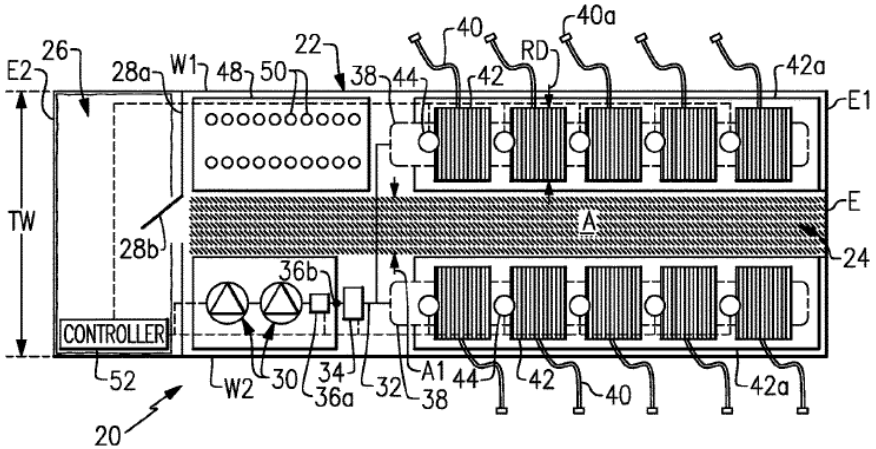

FIG.2

17. A distribution station comprising:

a mobile trailer;

a pump on the mobile trailer;

first and second manifolds on the mobile trailer and fluidly connected with the pump;

a plurality of reels on the mobile trailer;

a plurality of hoses connected, respectively, with the reels, wherein a portion of the reels are connected with the first manifold and another portion of the reels are connected with the second manifold;

a plurality of valves on the mobile trailer, each of the valves situated between one of the first or second manifolds and a respective different one of the hoses; and

a plurality of fluid level sensors, each of the fluid level sensors being associated a respective different one of the hoses,

wherein the mobile trailer includes first and second opposed trailer side walls, and a first group of the hoses are deployable from the first trailer side wall and a second group of the hoses are deployable from the second trailer side wall.

IPR2023-01238
Patent No. 10,974,955

Ground	Type	Summary
1	§§102/103	Claims 1 and 11-12 are anticipated and/or rendered obvious by *Van Vliet*
2	§103	Claims 1-5 and 11-12 are rendered obvious by *Van Vliet* in view of *Cable*
3	§103	Claims 6-10 and 14-20 are rendered obvious by *Van Vliet* in view of *LCR I* and/or *LCR II*
3A	§103	Claims 6-10 and 14-20 are rendered obvious by *Van Vliet* in view of *Cable* and *LCR I* and/or *LCR II*
4	§103	Claim 13 is rendered obvious by *Van Vliet* in view of *DeFosse*
4A	§103	Claim 13 is rendered obvious by *Van Vliet* in view of *Cable* and *DeFosse*

Petition at 5

Claim	Asserted Ground: Prior Art
Independent claim 1	Ground 1: §102 Van Vliet alone Ground 1: §103 Van Vliet + design choice Ground 2: §103 Van Vliet + Cable
Independent claim 11	Ground 1: §102/§103 Van Vliet alone Ground 2: §103 Van Vliet + Cable
Independent claim 19	Ground 3: §103 Van Vliet + LCR1 + LCR2 Ground 3A: §103 Van Vliet + Cable + LCR1 + LCR2

POPR at 26

IPR2023-01238
Independent Claims Patent
No. 10,974,955

1. A distribution station comprising:

a container including first and second opposed side walls that join first and second opposed end walls;

a pump in the container;

first and second manifolds in the container and fluidly connected with the pump;

a plurality of reels in the container;

a plurality of hoses, each said hose connected with a different one of the reels, wherein a portion of the reels are connected to be fed from the first manifold and another portion of the reels are connected to be fed from the second manifold;

a plurality of valves in the container, each said valve situated between one of the first or second manifolds and a respective different one of the reels;

a plurality of fluid level sensors, each said fluid level sensor being associated with a different one of the hoses; and

a controller configured to individually open and close the valves responsive to the fluid level sensors.

11. A distribution station comprising:

a container including first and second opposed side walls that join first and second opposed end walls;

at least one pump in the container;

at least one manifold in the container and fluidly connected with the at least one pump;

a plurality of reels in the container, each said reel individually connected with the at least one manifold;

a plurality of hoses, each said hose connected with a different one of the reels;

a plurality of valves in the container, each said valve situated between the at least one manifold and a respective different one of the reels;

a plurality of fluid level sensors, each said fluid level sensor connectable to an end of a different one of the hoses; and

a controller configured to individually open and close the valves responsive to the fluid level sensors.

19. A distribution station comprising:

a container including first and second opposed side walls that join first and second opposed end walls;

at least one pump in the container;

at least one manifold in the container and fluidly connected with the at least one pump;

a register between the at least one pump and the at least one manifold;

a plurality of reels in the container and connected with the at least one manifold;

a plurality of hoses, each said hose connected with a different one of the reels;

a plurality of valves in the container, each said valve situated between the at least one manifold and a respective different one of the reels;

a plurality of fluid level sensors, each said fluid level sensor being associated with a different one of the hoses; and

a controller configured to individually open and close the valves responsive to the fluid level sensors.

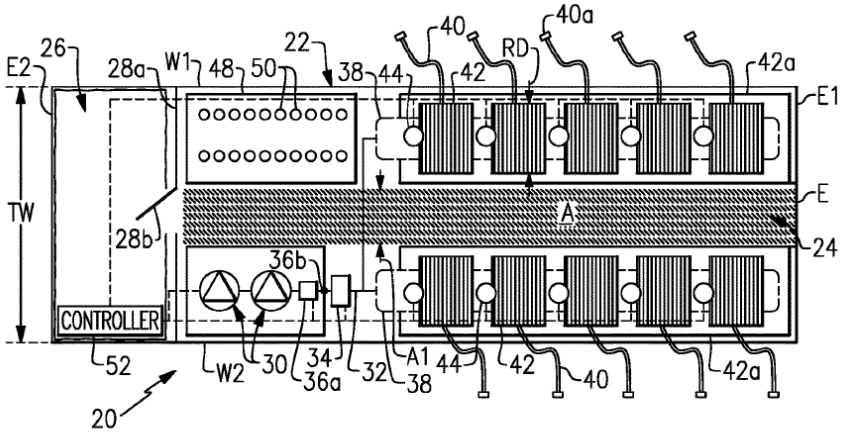

FIG.2

DEMONSTRATIVE EXHIBIT - NOT EVIDENCE

What Petitioner Wants Van Vliet to Disclose:

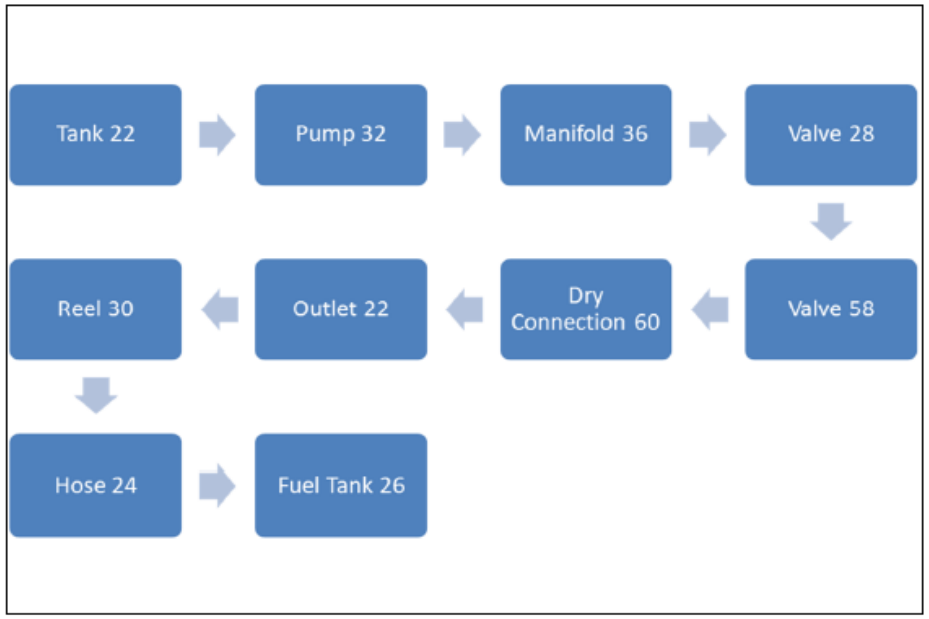

(1236 Petition at 28)

What Van Vliet Actually Discloses:

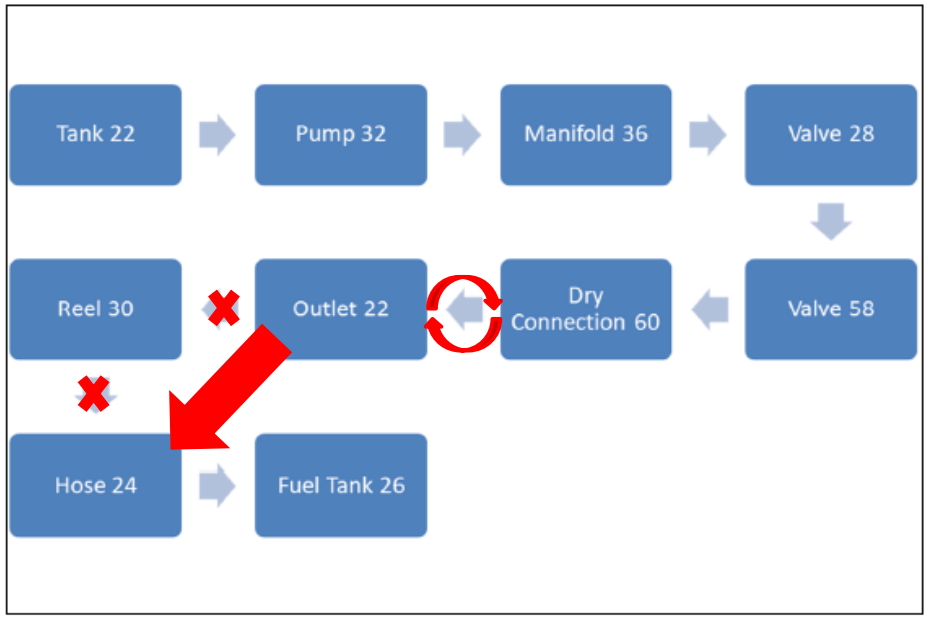

”each hose 24 is connected to a fuel outlet 22 by a dry connection 60”

(Van Vliet at [0022])

DEMONSTRATIVE EXHIBIT - NOT EVIDENCE

Petitioner’s Shifting Coxreels Contentions

Durham Original Declaration (1236)	Durham Deposition Testimony After Supplemental Declaration
150. “It would have been obvious to a POSITA to use the specific reel described in Coxreels’ in the system of Van Vliet.”	Q. Okay, it's not your position that it would have been obvious for a POSITA to incorporate a specific Coxreels reel into Van Vliet's mobile fuel delivery system? **A. Right.** (Supplemental Tr., 35:19-23)
151. “Accordingly, a POSITA would have recognized the advantage of using Coxreels’ reel in Van Vliet’s mobile fuel delivery system. This would have predictably resulted in enabling Van Vliet’s system to operate using a specified reel of a specified size. “	Q. Okay, so you're not proposing in this matter that a specific Coxreels reel would be incorporated into Van Vliet's mobile fuel delivery system? **A. Correct. It's the teachings of Coxreels that are important.** (Supplemental Tr., 35:14-18)
153. “To combine Van Vliet with Coxreels, a POSITA would have needed only to select Coxreels’ reel when choosing which reel to implement. Incorporating Coxreels’ reel into Van Vliet’s mobile fuel delivery system would merely involve combining a known prior art reel according to known methods, installing and using the reel in a conventional way. Therefore, a POSITA would have expected that the Coxreels reel would work successfully and according to its known functionality in combination with Van Vliet.”	Q. Now, in your testimony in these IPRs, you haven't identified a specific Coxreels reel that you are proposing would be combined with the Van Vliet reference; correct? **A. Correct, it's the teachings of Coxreels that I'm relying on, not a particular model, just the overall teachings, particularly the teachings of a fluid flow path going through the spindle of the reel and then onto the hose.** (Supplemental Tr., 35:5-13)