IN THE UNITED STATES PATENT AND TRADEMARK OFFICE

BEFORE THE PATENT TRIAL AND APPEAL BOARD

PERMIAN GLOBAL INC. AND
MANTICORE FUELS, LLC
Petitioners

v.

FUEL AUTOMATION STATION, LLC,
Patent Owner

Case No. IPR2023-01236
Patent 10,815,118

PETITIONERS' DEMONSTRATIVES FOR ORAL ARGUMENT (EX1060)

Petitioners Permian Global Inc. and Manticore Fuels, LLC

Hearing Presentation

IPR2023-01236 (U.S. Patent No. 10,815,118)
IPR2023-01237 (U.S. Patent No. 9,586,805)
IPR2023-01238 (U.S. Patent No. 10,974,955)

Outline of Arguments

I. **Overview of the Patents**
II. **Summary of the Grounds & Overview of Disputes**
III. **'805 Patent**
IV. **'118 Patent**
V. **'955 Patent**

Outline of Arguments

I. **Overview of the Patents**
II. Summary of the Grounds & Overview of Disputes
III. '805 Patent
IV. '118 Patent
V. '955 Patent

'805 Patent: Earliest Priority Date

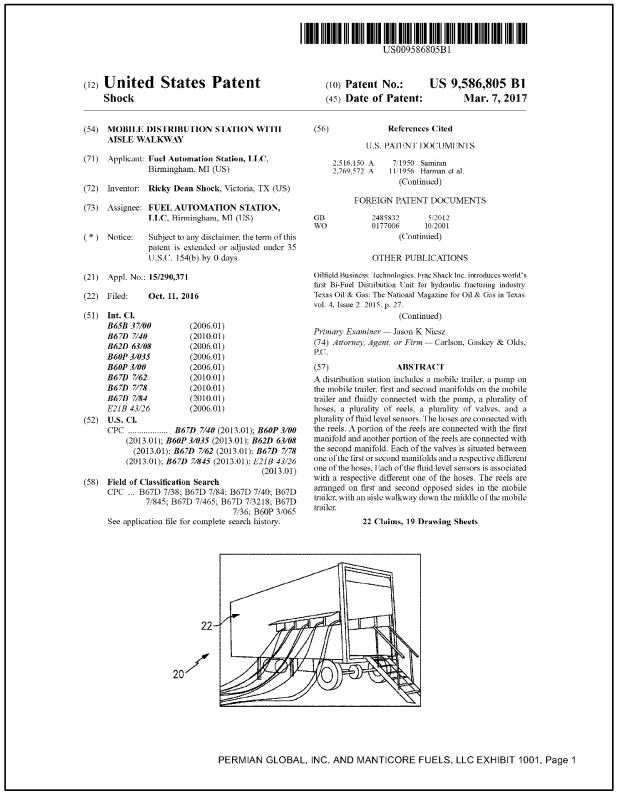

US009586805B1

(12) **United States Patent**
Shock

(10) **Patent No.: US 9,586,805 B1**
(45) **Date of Patent: Mar. 7, 2017**

(54) **MOBILE DISTRIBUTION STATION WITH AISLE WALKWAY**

(71) Applicant: **Fuel Automation Station, LLC**, Birmingham, MI (US)

(72) Inventor: **Ricky Dean Shock**, Victoria, TX (US)

(73) Assignee: **FUEL AUTOMATION STATION, LLC**, Birmingham, MI (US)

(*) Notice: Subject to any disclaimer, the term of this patent is extended or adjusted under 35 U.S.C. 154(b) by 0 days.

(21) Appl. No.: **15/290,371**

(22) Filed: **Oct. 11, 2016**

(51) **Int. Cl.**

B65B 37/00	(2006.01)
B67D 7/40	(2010.01)
B62D 63/08	(2006.01)
B60P 3/035	(2006.01)
B60P 3/00	(2006.01)
B67D 7/62	(2010.01)
B67D 7/78	(2010.01)
B67D 7/84	(2010.01)
E21B 43/26	(2006.01)

(52) **U.S. Cl.**
CPC ***B67D 7/40*** (2013.01); ***B60P 3/00*** (2013.01); ***B60P 3/035*** (2013.01); ***B62D 63/08*** (2013.01); ***B67D 7/62*** (2013.01); ***B67D 7/78*** (2013.01); ***B67D 7/845*** (2013.01); *E21B 43/26* (2013.01)

(58) **Field of Classification Search**
CPC ... B67D 7/38; B67D 7/84; B67D 7/40; B67D 7/845; B67D 7/465; B67D 7/3218; B67D 7/36; B60P 3/065
See application file for complete search history.

(56) **References Cited**

U.S. PATENT DOCUMENTS

2,516,150	A	7/1950	Samiran
2,769,572	A	11/1956	Harman et al.

(Continued)

FOREIGN PATENT DOCUMENTS

GB	2485832	5/2012
WO	0177006	10/2001

(Continued)

OTHER PUBLICATIONS

Oilfield Business: Technologies. Frac Shack Inc. introduces world's first Bi-Fuel Distribution Unit for hydraulic fracturing industry. Texas Oil & Gas: The National Magazine for Oil & Gas in Texas. vol. 4, Issue 2. 2015. p. 27.

(Continued)

Primary Examiner — Jason K Niesz
(74) *Attorney, Agent, or Firm* — Carlson, Gaskey & Olds, P.C.

(57) **ABSTRACT**

A distribution station includes a mobile trailer, a pump on the mobile trailer, first and second manifolds on the mobile trailer and fluidly connected with the pump, a plurality of hoses, a plurality of reels, a plurality of valves, and a plurality of fluid level sensors. The hoses are connected with the reels. A portion of the reels are connected with the first manifold and another portion of the reels are connected with the second manifold. Each of the valves is situated between one of the first or second manifolds and a respective different one of the hoses. Each of the fluid level sensors is associated with a respective different one of the hoses. The reels are arranged on first and second opposed sides in the mobile trailer, with an aisle walkway down the middle of the mobile trailer.

22 Claims, 19 Drawing Sheets

22
20

PERMIAN GLOBAL, INC. AND MANTICORE FUELS, LLC EXHIBIT 1001, Page 1

(10) **Patent No.: US 9,586,805 B1**
(45) **Date of Patent: Mar. 7, 2017**

(22) Filed: **Oct. 11, 2016**

IPR2023-01237, EX1001 ('805 Patent) at Cover

'805 Patent: Overview of Exemplary Independent Claims

1. A distribution station comprising:
a mobile trailer;
a pump on the mobile trailer;
first and second manifolds on the mobile trailer and fluidly connected with the pump;
a plurality of reels on the mobile trailer;
a plurality of hoses connected, respectively, with the reels, wherein a portion of the reels are connected with the first manifold and another portion of the reels are connected with the second manifold;
a plurality of valves on the mobile trailer, each of the valves situated between one of the first or second manifolds and a respective different one of the hoses; and
a plurality of fluid level sensors, each of the fluid level sensors being associated a respective different one of the hoses,
wherein the reels are arranged on first and second opposed sides in the mobile trailer, with an aisle walkway down the middle of the mobile trailer.

17. A distribution station comprising:
a mobile trailer;
a pump on the mobile trailer;
first and second manifolds on the mobile trailer and fluidly connected with the pump;
a plurality of reels on the mobile trailer;
a plurality of hoses connected, respectively, with the reels, wherein a portion of the reels are connected with the first manifold and another portion of the reels are connected with the second manifold;
a plurality of valves on the mobile trailer, each of the valves situated between one of the first or second manifolds and a respective different one of the hoses; and
a plurality of fluid level sensors, each of the fluid level sensors being associated a respective different one of the hoses,
wherein the mobile trailer includes first and second opposed trailer side walls, and a first group of the hoses are deployable from the first trailer side wall and a second group of the hoses are deployable from the second trailer side wall.

IPR2023-01237, EX1001 ('805 Patent) at Claims 1 & 17

'118 Patent: Earliest Priority Date

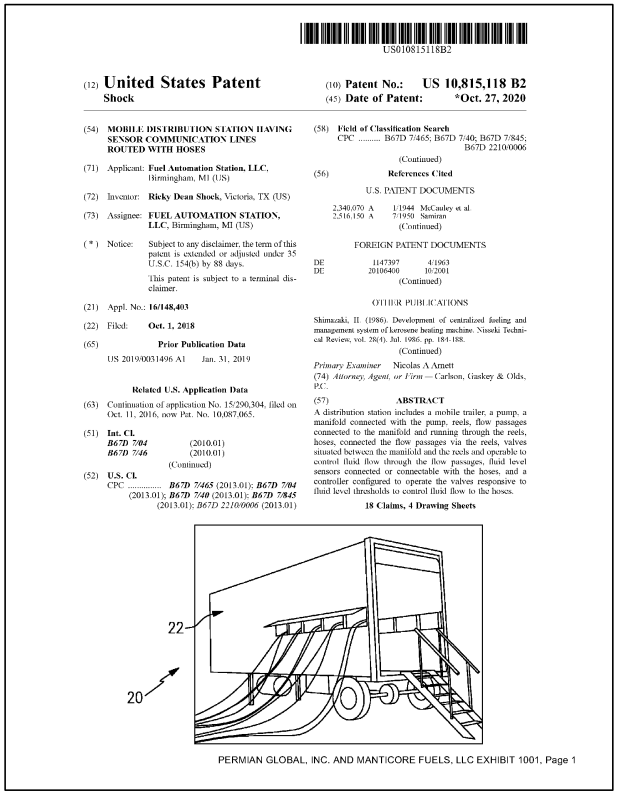

US10815118B2

(12) **United States Patent**
Shock

(10) **Patent No.: US 10,815,118 B2**
(45) **Date of Patent: *Oct. 27, 2020**

(54) **MOBILE DISTRIBUTION STATION HAVING SENSOR COMMUNICATION LINES ROUTED WITH HOSES**

(71) Applicant: **Fuel Automation Station, LLC**, Birmingham, MI (US)

(72) Inventor: **Ricky Dean Shock**, Victoria, TX (US)

(73) Assignee: **FUEL AUTOMATION STATION, LLC**, Birmingham, MI (US)

(*) Notice: Subject to any disclaimer, the term of this patent is extended or adjusted under 35 U.S.C. 154(b) by 88 days.

This patent is subject to a terminal disclaimer.

(21) Appl. No.: **16/148,403**

(22) Filed: **Oct. 1, 2018**

(65) **Prior Publication Data**

US 2019/0031496 A1 Jan. 31, 2019

Related U.S. Application Data

(63) Continuation of application No. 15/290,304, filed on Oct. 11, 2016, now Pat. No. 10,087,065.

(51) **Int. Cl.**
B67D 7/04 (2010.01)
B67D 7/46 (2010.01)
(Continued)

(52) **U.S. Cl.**
CPC ***B67D 7/465*** (2013.01); ***B67D 7/04*** (2013.01); ***B67D 7/40*** (2013.01); ***B67D 7/845*** (2013.01); *B67D 2210/0006* (2013.01)

(58) **Field of Classification Search**
CPC B67D 7/465; B67D 7/40; B67D 7/845; B67D 2210/0006
(Continued)

(56) **References Cited**

U.S. PATENT DOCUMENTS

2,340,070 A 1/1944 McCauley et al.
2,516,150 A 7/1950 Samiran
(Continued)

FOREIGN PATENT DOCUMENTS

DE 1147397 4/1963
DE 20106400 10/2001
(Continued)

OTHER PUBLICATIONS

Shimazaki, H. (1986). Development of centralized fueling and management system of kerosene heating machine. Nissoki Technical Review, vol. 28(4). Jul. 1986. pp. 184-188.
(Continued)

Primary Examiner Nicolas A Arnett
(74) *Attorney, Agent, or Firm* — Carlson, Gaskey & Olds, PC

(57) **ABSTRACT**

A distribution station includes a mobile trailer, a pump, a manifold connected with the pump, reels, flow passages connected to the manifold and running through the reels, hoses, connected the flow passages via the reels, valves situated between the manifold and the reels and operable to control fluid flow through the flow passages, fluid level sensors connected or connectable with the hoses, and a controller configured to operate the valves responsive to fluid level thresholds to control fluid flow to the hoses.

18 Claims, 4 Drawing Sheets

PERMIAN GLOBAL, INC. AND MANTICORE FUELS, LLC EXHIBIT 1001, Page 1

(10) **Patent No.: US 10,815,118 B2**
(45) **Date of Patent: *Oct. 27, 2020**

(22) Filed: **Oct. 1, 2018**

(65) **Prior Publication Data**

US 2019/0031496 A1 Jan. 31, 2019

Related U.S. Application Data

(63) Continuation of application No. 15/290,304, filed on Oct. 11, 2016, now Pat. No. 10,087,065.

IPR2023-01236, EX1001 ('118 Patent) at Cover

'118 Patent: Overview of Exemplary Independent Claims

1. A distribution station comprising:
a mobile trailer;
a pump on the mobile trailer;
a manifold on the mobile trailer and connected with the pump;
a plurality of reels on the mobile trailer;
a plurality of flow passages, each said flow passage being connected to the manifold and running through a respective one of the reels;
a plurality of hoses, each said hose being connected with a respective one of the flow passages via a respective one of the reels;
a plurality of valves on the mobile trailer, each said valve situated between the manifold and a respective different one of the reels and being operable to control fluid flow through a respective one of the flow passages;
a plurality of fluid level sensors, each said fluid level sensor being connected or connectable with a respective different one of the hoses; and
a controller configured to operate the valves responsive to fluid level thresholds to control fluid flow to the hoses.

10. A distribution station comprising:
a mobile trailer;
a pump on the mobile trailer;
a manifold on the mobile trailer and connected with the pump;
a plurality of reels on the mobile trailer;
a plurality of hoses, each said hose being connected with the manifold and each said hose including a tube and a sleeve that circumscribes the tube;
a plurality of valves on the mobile trailer, each said valve situated between the manifold and a respective different one of the hoses and being operable to control fluid flow from the manifold to the respective different one of the hoses;
a plurality of fluid level sensors, each said fluid level sensor being connected or connectable with a respective different one of the hoses; and
a controller configured to operate the valves responsive to fluid level thresholds to control fluid flow to the hoses.

IPR2023-01236, EX1001 ('118 Patent) at Claims 1 & 10

'955 Patent: Earliest Priority Date

US010974955B2

(12) **United States Patent**
Shock

(10) **Patent No.: US 10,974,955 B2**
(45) **Date of Patent: *Apr. 13, 2021**

(54) **MOBILE DISTRIBUTION STATION FOR FLUID DISPENSING**

(71) Applicant: **Fuel Automation Station, LLC**, Birmingham, MI (US)

(72) Inventor: **Ricky Dean Shock**, Victoria, TX (US)

(73) Assignee: **FUEL AUTOMATION STATION, LLC**, Birmingham, MI (US)

(*) Notice: Subject to any disclaimer, the term of this patent is extended or adjusted under 35 U.S.C. 154(b) by 0 days.

This patent is subject to a terminal disclaimer.

(21) Appl. No.: **16/700,095**

(22) Filed: **Dec. 2, 2019**

(65) **Prior Publication Data**

US 2020/0102208 A1 Apr. 2, 2020

Related U.S. Application Data

(63) Continuation of application No. 15/890,584, filed on Feb. 7, 2018, now Pat. No. 10,494,251, which is a

(Continued)

(51) **Int. Cl.**
B67D 7/04 (2010.01)
B67D 7/84 (2010.01)

(Continued)

(52) **U.S. Cl.**
CPC ***B67D 7/845*** (2013.01); ***B60P 3/035*** (2013.01); ***B62D 6/008*** (2013.01); ***B67D 7/04*** (2013.01);

(Continued)

(58) **Field of Classification Search**
CPC . B67D 7/845; B67D 7/04; B67D 7/40; B67D 7/78; B67D 7/62; B67D 7/348,

(Continued)

(56) **References Cited**

U.S. PATENT DOCUMENTS

2,340,070 A 1/1944 McCauley et al.
2,516,150 A 7/1950 Samiran

(Continued)

FOREIGN PATENT DOCUMENTS

DE 1147397 4/1963
DE 20106400 10/2001

(Continued)

OTHER PUBLICATIONS

Oilfield Business Technologies. Frac Shack Inc. introduces world's first Bi-Fuel Distribution Unit for hydraulic fracturing industry. Texas Oil & Gas: The National Magazine for Oil & Gas in Texas. vol. 4, Issue 2. 2015. p. 27.

(Continued)

Primary Examiner Nicolas A Arnett
(74) *Attorney, Agent, or Firm* — Carlson, Gaskey & Olds, P.C.

(57) **ABSTRACT**

A distribution station includes a container, a pump, first and second manifolds fluidly connected with the pump, reels, hoses, valves, fluid level sensors, and a controller. Each hose is connected with a different one of the reels. A portion of the reels are connected to be fed from the first manifold and another portion of the reels are connected to be fed from the second manifold. Each valve is situated between one of the first or second manifolds and a respective different one of the reels. Each fluid level sensor is associated with a different one of the hoses. The controller is configured to individually open and close the valves responsive to the fluid level sensors.

20 Claims, 5 Drawing Sheets

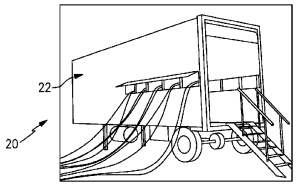

PERMIAN GLOBAL, INC. AND MANTICORE FUELS, LLC EXHIBIT 1001, Page 1

(10) **Patent No.: US 10,974,955 B2**
(45) **Date of Patent: *Apr. 13, 2021**

(22) Filed: **Dec. 2, 2019**

(65) **Prior Publication Data**

US 2020/0102208 A1 Apr. 2, 2020

Related U.S. Application Data

(63) Continuation of application No. 15/890,584, filed on Feb. 7, 2018, now Pat. No. 10,494,251, which is a continuation of application No. 15/416,198, filed on Jan. 26, 2017, now Pat. No. 9,932,220, which is a continuation of application No. 15/290,371, filed on Oct. 11, 2016, now Pat. No. 9,586,805.

IPR2023-01238, EX1001 ('955 Patent) at Cover

'955 Patent: Overview of Exemplary Independent Claims

1. A distribution station comprising:

a container including first and second opposed side walls that join first and second opposed end walls;

a pump in the container;

first and second manifolds in the container and fluidly connected with the pump;

a plurality of reels in the container;

a plurality of hoses, each said hose connected with a different one of the reels, wherein a portion of the reels are connected to be fed from the first manifold and another portion of the reels are connected to be fed from the second manifold;

a plurality of valves in the container, each said valve situated between one of the first or second manifolds and a respective different one of the reels;

a plurality of fluid level sensors, each said fluid level sensor being associated with a different one of the hoses; and

a controller configured to individually open and close the valves responsive to the fluid level sensors.

19. A distribution station comprising:

a container including first and second opposed side walls that join first and second opposed end walls;

at least one pump in the container;

at least one manifold in the container and fluidly connected with the at least one pump;

a register between the at least one pump and the at least one manifold;

a plurality of reels in the container and connected with the at least one manifold;

a plurality of hoses, each said hose connected with a different one of the reels;

a plurality of valves in the container, each said valve situated between the at least one manifold and a respective different one of the reels;

a plurality of fluid level sensors, each said fluid level sensor being associated with a different one of the hoses; and

a controller configured to individually open and close the valves responsive to the fluid level sensors.

IPR2023-01238, EX1001 ('955 Patent) at Claims 1 & 19

Outline of Arguments

I. Overview of the Patents
II. **Summary of the Grounds & Overview of Disputes**
III. '805 Patent
IV. '118 Patent
V. '955 Patent

Primary Reference: *Van Vliet*

(19) **United States**
(12) **Patent Application Publication**
Van Vliet et al.
(10) **Pub. No.: US 2011/0197988 A1**
(43) **Pub. Date: Aug. 18, 2011**

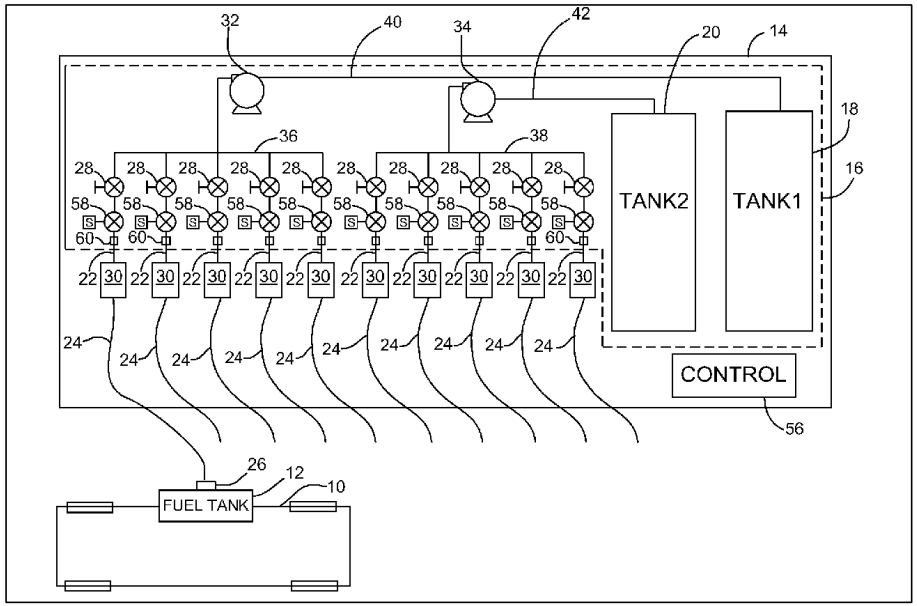

(57) **ABSTRACT**

A fuel delivery system and method for reducing the likelihood that a fuel tank of equipment at a well site during fracturing of a well will run out of fuel. A fuel source has plural fuel outlets, a hose on each fuel outlet of the plural fuel outlets, each hose being connected to a fuel cap on a respective one of the fuel tanks for delivery of fuel to the fuel tank. At least a manually controlled valve at each fuel outlet controls fluid flow through the hose at the respective fuel outlet.

IPR2023-01237, EX1004 (Van Vliet) at Cover

Summary of the Grounds: '805 Patent

1. A distribution station comprising:

wherein the reels are arranged on first and second opposed sides in the mobile trailer, with an aisle walkway down the middle of the mobile trailer.

17. A distribution station comprising:

wherein the mobile trailer includes first and second opposed trailer side walls, and a first group of the hoses are deployable from the first trailer side wall and a second group of the hoses are deployable from the second trailer side wall.

- *Van Vliet* is base reference for all grounds
  - *Cable* discloses aisle walkway
    - Grounds 1, 3, and 4
  - *AFD* discloses hoses deployed out both sides
    - Ground 3, 5, 6, and 7
  - *Coxreels* discloses reel dimensions
    - Grounds 4 and 7 (dependent claims)
  - *Lowrie* discloses racks for reels
    - Grounds 6 and 7 (dependent claims)

IPR2023-01237, EX1001 ('805 Patent) at Claim 1 & 17 (left); *see* Paper 3 (Petition) at 5 (right)

'805 Patent: Disputed Issues

1. A distribution station comprising:

wherein the reels are arranged on first and second opposed sides in the mobile trailer, with an aisle walkway down the middle of the mobile trailer.

17. A distribution station comprising:

wherein the mobile trailer includes first and second opposed trailer side walls, and a first group of the hoses are deployable from the first trailer side wall and a second group of the hoses are deployable from the second trailer side wall.

<u>Patent Owner Does Not Dispute:</u>

- References qualify as prior art
- *Van Vliet* in view of *Cable* discloses claims 1-16
  - And elements added in dep. claims 18-22

<u>Patent Owner Disputes:</u>

- Rationale to combine *Van Vliet* with *Cable*
- Rationale to combine *Van Vliet* & *Coxreels*
- *Van Vliet*'s disclosure of Claim 17[h]
- *AFD*'s disclosure of Claim 17[h]

IPR2023-01237, EX1001 ('805 Patent) at Claim 1 & 17 (left); *see* Paper 3 (Petition) at 5 (right)

Summary of the Grounds: '118 Patent

1. A distribution station comprising:
a mobile trailer;
a pump on the mobile trailer;
a manifold on the mobile trailer and connected with the pump;
a plurality of reels on the mobile trailer;
a plurality of flow passages, each said flow passage being connected to the manifold and running through a respective one of the reels;
a plurality of hoses, each said hose being connected with a respective one of the flow passages via a respective one of the reels;
a plurality of valves on the mobile trailer, each said valve situated between the manifold and a respective different one of the reels and being operable to control fluid flow through a respective one of the flow passages;
a plurality of fluid level sensors, each said fluid level sensor being connected or connectable with a respective different one of the hoses; and
a controller configured to operate the valves responsive to fluid level thresholds to control fluid flow to the hoses.

- *Van Vliet* is base reference for all grounds
  - *Coxreels* discloses flow passages
    - Grounds 1A and 2A
  - *Shoap* discloses hose with tube and sleeve
    - Grounds 2 and 3 (independent Claim 4)
  - *Hosecraft* discloses fabric sleeve
    - Ground 3 (dependent claims)

IPR2023-01236, EX1001 ('118 Patent) at Claim 1; *see* Paper 3 (Petition) at 5 (right)

'118 Patent: Disputed Issues

1. A distribution station comprising:
a mobile trailer;
a pump on the mobile trailer;
a manifold on the mobile trailer and connected with the pump;
a plurality of reels on the mobile trailer;
a plurality of flow passages, each said flow passage being connected to the manifold and running through a respective one of the reels;
a plurality of hoses, each said hose being connected with a respective one of the flow passages via a respective one of the reels;
a plurality of valves on the mobile trailer, each said valve situated between the manifold and a respective different one of the reels and being operable to control fluid flow through a respective one of the flow passages;
a plurality of fluid level sensors, each said fluid level sensor being connected or connectable with a respective different one of the hoses; and
a controller configured to operate the valves responsive to fluid level thresholds to control fluid flow to the hoses.

IPR2023-01236, EX1001 ('118 Patent) at Claim 1; *see* Paper 3 *(*Petition) at 5 (right)

<u>Patent Owner Does Not Dispute:</u>

- References qualify as prior art
- *Van Vliet* + *Coxreels* discloses Claims 1-3
  - And similar elements of claims 4-18

<u>Patent Owner Disputes:</u>

- Rationale to combine *Van Vliet* & *Coxreels*
- Rationale to combine *Van Vliet* & *Shoap*

Summary of the Grounds: '955 Patent

1. A distribution station comprising:
a container including first and second opposed side walls that join first and second opposed end walls;
a pump in the container;
first and second manifolds in the container and fluidly connected with the pump;
a plurality of reels in the container;
a plurality of hoses, each said hose connected with a different one of the reels, wherein a portion of the reels are connected to be fed from the first manifold and another portion of the reels are connected to be fed from the second manifold;
a plurality of valves in the container, each said valve situated between one of the first or second manifolds and a respective different one of the reels;
a plurality of fluid level sensors, each said fluid level sensor being associated with a different one of the hoses; and
a controller configured to individually open and close the valves responsive to the fluid level sensors.

- *Van Vliet* is base reference for all grounds
  - *Cable* discloses reels "connected to be fed"
    - Grounds 2, 3A, and 4A
  - *LCR I* and *LCR II* disclose fluid register
    - Grounds 3 and 3A (independent Claim 19)
  - *DeFosse* discloses pumps in series
    - Grounds 4 and 4A (dependent claims)

IPR2023-01238, EX1001 ('955 Patent) at Claim 1 (left); *see* Paper 3 (Petition) at 5-6 (right)

'955 Patent: Disputed Issues

1. A distribution station comprising:
a container including first and second opposed side walls that join first and second opposed end walls;
a pump in the container;
first and second manifolds in the container and fluidly connected with the pump;
a plurality of reels in the container;
a plurality of hoses, each said hose connected with a different one of the reels, wherein a portion of the reels are connected to be fed from the first manifold and another portion of the reels are connected to be fed from the second manifold;
a plurality of valves in the container, each said valve situated between one of the first or second manifolds and a respective different one of the reels;
a plurality of fluid level sensors, each said fluid level sensor being associated with a different one of the hoses; and
a controller configured to individually open and close the valves responsive to the fluid level sensors.

<u>Patent Owner Does Not Dispute:</u>

- References qualify as prior art
- *Van Vliet* + *Cable* discloses claims 1-5 & 11-12
  - And similar elements of claims 6-10 & 13-20

<u>Patent Owner Disputes:</u>

- Rationale to combine *Van Vliet* & *Cable*
- Rationale to combine *Van Vliet* & *DeFosse*
- *LCR I & II* disclosure of fluid register location in claim 19

IPR2023-01238, EX1001 ('955 Patent) at Claim 1 (left); *see* Paper 3 (Petition) at 5-6 (right)

Outline of Arguments

I. Overview of the Patents
II. Summary of the Grounds & Overview of Disputes
III. **'805 Patent**
IV. '118 Patent
V. '955 Patent

'805 Patent: Summary of the Grounds

Ground	Type	Summary
1	§103	Claims 1-22 are rendered obvious by *Vliet* in view of *Cable*
2	§102/103	Claims 17 and 18 are anticipated and/or rendered obvious by *Vliet*
3	§103	Claims 9-10 are rendered obvious by *Vliet* in view of *Cable* and *AFD*
4	§103	Claims 4, 11, 12, and 20 are rendered obvious by *Vliet* in view of *Cable* and *Coxreels*
5	§103	Claims 1, 7-10, 13-18, and 22 are rendered obvious by *Vliet* in view of *AFD*
6	§103	Claims 2-3, 6, and 19 are rendered obvious by *Vliet* in view of *AFD* and *Lowrie*
7	§103	Claims 4, 5, 20 and 21 are rendered obvious by *Vliet* in view of *AFD*, *Lowrie*, and *Coxreels*
8	§103	Claims 11 and 12 are rendered obvious by *Vliet* in view of *AFD* and *Coxreels*

IPR2023-01237, Paper 3 (Petition) at 5

'805 Patent: Disputed Issues

A. A POSITA would have been motivated to combine Van Vliet and Cable
- **Grounds 1, 3, and 4**

B. Van Vliet discloses or renders obvious Claim 17[h]
- **Grounds 1, 2, and 5**

C. AFD discloses or renders obvious Claim 17[h]
- **Ground 5**

D. A POSITA would have been motivated to combine Van Vliet and Coxreels
- **Grounds 4, 7, and 8**

'805 Patent: Disputed Issues

A. A POSITA would have been motivated to combine Van Vliet and Cable
- **Grounds 1, 3, and 4**

B. Van Vliet discloses or renders obvious Claim 17[h]
- **Grounds 1, 2, and 5**

C. AFD discloses or renders obvious Claim 17[h]
- **Ground 5**

D. A POSITA would have been motivated to combine Van Vliet and Coxreels
- **Grounds 4, 7, and 8**

Overview of *Cable*

United States Patent [19]

Cable et al.

[11] **3,810,487**

[45] **May 14, 1974**

[54] **MOBILE LUBRICATION APPARATUS**

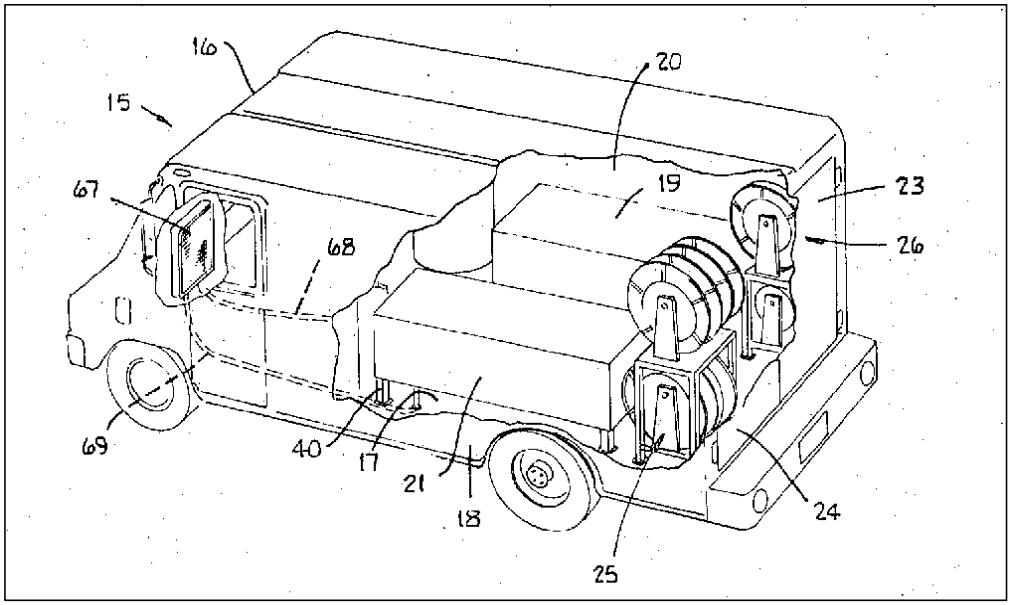

Referring now more particularly to the drawings, there is shown a mobile lubrication apparatus **15** with a conventional van truck **16** having a driver compartment as well as a rear compartment wherein two bays of tanks **19** and **21** are mounted within the van atop rear platform **17**. Bay **21** of the tanks extends along side

Two hose assemblies **25** and **26** are mounted to platform **17** respectively adjacent tank rows **21** and **19**. The hose assemblies are spaced apart and are in line with the respective tank rows with the storage area and walkway extending between the hose assemblies. Each of the hose assemblies has a pair of upper reels and a pair of lower reels rotatably mounted to the frame of a wheel assembly. Each reel has a hose wrapped thereon which is extendable through the rear of the truck to another vehicle to be lubricated.

IPR2023-01237, EX1005 (Cable) at Cover, 2:48-53, & 2:64-3:5

Overview of *Cable*

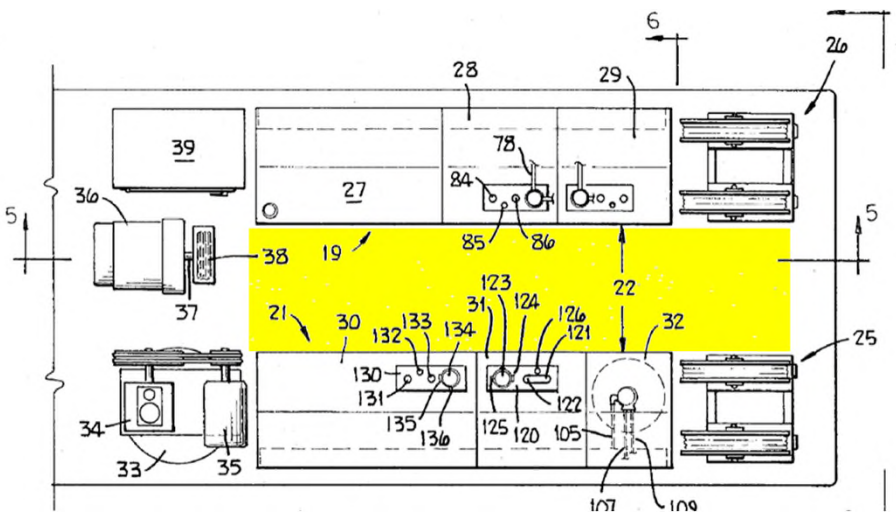

Referring now more particularly to the drawings, there is shown a mobile lubrication apparatus **15** with a conventional van truck **16** having a driver compartment as well as a rear compartment wherein two bays of tanks **19** and **21** are mounted within the van atop rear platform **17**. Bay **21** of the tanks extends along side wall **18** of the truck which is fragmented for the sake of clarity. Likewise, bay **19** of the tanks extends along and adjacent to side wall **20** of the truck. The tank bays **19** and **21** are spaced apart a distance **22** (FIG. **2**) forming a walkway and storage area therebetween allowing a person to walk between the tanks from the driver compartment toward the back doors **23** and **24** which are hingedly mounted to the truck. The tanks are mounted to platform **17** by a plurality of legs **40**.

IPR2023-01237, EX1005 (Cable) at FIG. 2 (left) & 2:48-63 (right)

Rationale to Combine *Van Vliet* and *Cable*

1

Van Vliet has explicit motivation to look to other references for the spatial layout of its equipment, and Van Vliet and Cable are similar references.

IPR2023-01237, Paper 3 (Petition) at 22-24; EX1003 (Durham Declaration) at ¶¶ 138-139

2

Combining Cable's aisle walkway with Van Vliet allows Van Vliet's system to be more easily traversed by operators for repairs, maintenance and/or physical inspection.

IPR2023-01237, Paper 3 (Petition) at 21; EX1003 (Durham Declaration) at ¶ 137

3

Using Cable's arrangement of reels on both sides of the vehicle with Van Vliet facilitates fueling equipment on both sides of the trailer.

IPR2023-01237, Paper 3 (Petition) at 23; EX1003 (Durham Declaration) at ¶¶ 138, 172

#1: Explicit motivation to consider spatial layouts

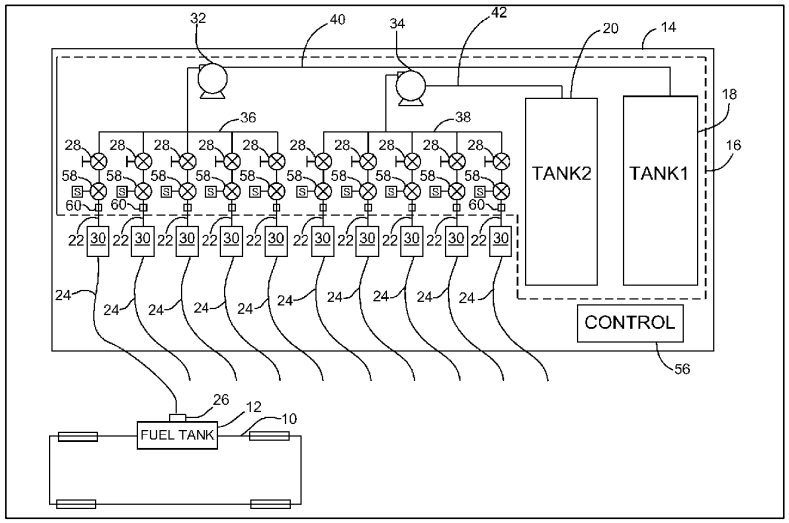

be mounted on the trailer. Size of the pumps **32**, **34** should be selected to ensure an adequate fill time for the fuel tanks **12**, such as 10 minutes, with the generator or generators (not shown) to supply appropriate power for the pumps and other electrically operated equipment on the trailer **14**. Pumps **32**, **34** may be removable in order to be changed out if required. For example, the pumps **32**, **34** may be connected by non-permanent wiring. Pumps **32**, **34** may be centrifugal pumps, such as Gorman-Rupp™ or Blackmer™ pumps. Lights and suitable windows in the trailer **14** are provided so that the operator has full view of the equipment mounted on the trailer and the equipment **10** being refueled. The spatial orientation of the control station **56**, reels **30**, manifolds **36**, **38**, tanks **18**, **20** and other equipment such as the generators is a matter of design choice for the manufacturer and will depend on space requirements.

IPR2023-01237, EX1004 (Van Vliet) at FIG. 1 (left) & [0027] (right); *see also id.*, Paper 3 (Petition) at 23-24; *id.*, EX1003 (Durham Declaration) at ¶ 139

#1: Explicit motivation to consider spatial layouts

Vliet also contains an express motivation to combine. EX1003, ¶139. *Vliet* states that "[t]he manual valves 28 should be readily accessible to an operator on the trailer 14. This can be arranged with the manifolds 36, 38 mounted on a wall of the trailer with the outlets 22 extending inward of the trailer wall." EX1004, [0026]. *Vliet* notes that the spatial orientation of the reels 30, manifolds 36 and 38, tanks 18 and 20, and other equipment shown "is a matter of design choice for the manufacturer and will depend on space requirements." EX1004, [0027]. A POSITA would then look to other references, such as *Cable*, for spatial configurations that allow for easy access to various equipment, such as valves, manifolds and pumps. *See* EX1003, ¶139. A POSITA, reading *Cable* would have understood that an aisle walkway, such as the one taught by *Cable* would be an effective and simple way to allow an operator to access manual valves inside the trailer. *Id.*

Vliet and *Cable* describe a mobile truck/trailer system for delivery of fuel, lubricants or other hydrocarbons. EX1003, ¶137. Both use deployable hoses stored on reels arranged so that multiple hoses can be delivering fuel or other fluids to the receiving equipment at the same time. *Id.* In both, to deliver the fluids, the hoses are "pulled out" from the reels and extending to the receiving equipment, and then "reeled up" onto the reels for storage or transportation. *Id.* A POSITA would have

IPR2023-01237, Paper 3 (Petition) at 23-24 (left) & 21 (right); *see also id.*, EX1003 (Durham Declaration) at ¶ 139

Patent Owner's Response

111. The system of Van Vliet is not a drivable road vehicle like Cable's truck and does not share Cable's goal of rapid servicing. As a result, even though Van Vliet and Cable both have reels and hoses, a POSITA would have understood their significant differences. The mere presence of hoses and reels in both would not have motivated a POSITA to combine them.

112. Further, to the extent that there is design choice as suggested by Petitioner (Petition at 36), since Cable's configuration is a drivable truck for rapid servicing in a roadside environment, a POSITA would have been deterred from looking to Cable for a physical arrangement in Van Vliet, which is not a drivable vehicle and is not concerned with rapid servicing in a roadside environment.

116. A POSITA would have understood that because there is different equipment between Cable and Van Vliet, Cable's arrangement would not represent a viable option for arranging Van Vliet's equipment. For reference, Figure 2 of Cable and Figure 1 of Van Vliet are copied below.

117. The equipment in Van Vliet cannot be arranged according to Cable's arrangement because Van Vliet has different equipment that would differ in size and shape from Cable's. Therefore, a POSITA would not have expected the arrangement of equipment in Cable to improve Van Vliet in the same way. The combination would not have yielded predictable results.

IPR2023-01237, EX2004 (Rodgers Declaration) at ¶¶ 111-112, 116-117

Institution Decision

Next, FAS argues that one skilled in the art would not have had a reason to combine Van Vliet and Cable because Cable "includes mostly different equipment" and "is used for a different purpose" than Van Vliet. Prelim. Resp 20. Although FAS identifies differences between these two references, FAS never acknowledges what one skilled in the art would have understood from their respective teachings. *See id.* at 20–23. Thus, Permian's expert testimony is the only evidence of record on this point. *See, e.g.*, Ex. 1003 ¶¶ 137–140, 169–173.

FAS's argument is also unavailing because there is no evidence that the differences identified by FAS are sufficiently different such that one skilled in the art would disregard Cable's teachings. For instance, FAS

FAS's argument is also unavailing because there is no evidence that the differences identified by FAS are sufficiently different such that one skilled in the art would disregard Cable's teachings. For instance, FAS argues that Van Vliet and Cable are different because they handle different fluids—for example, "fuel" versus "waste oil." Prelim. Resp. 23–24. But FAS never explains why the type of petroleum product in each delivery hose would render the references so dissimilar that one skilled in the art would not consider them together when contemplating ease of access to the hoses. *See KSR Int'l Co. v. Teleflex Inc.*, 550 U.S. 398, 401 (2007) ("[I]f a technique has been used to improve one device, and a person of ordinary skill in the art would recognize that it would improve similar devices in the same way, using the technique is obvious unless its actual application is beyond that person's skill.").

IPR2023-01237, Paper 9 (Institution Decision) at 7-8

PO Ignores Skill of a POSITA

116. A POSITA would have understood that because there is different equipment between Cable and Van Vliet, Cable's arrangement would not represent a viable option for arranging Van Vliet's equipment. For reference, Figure 2 of Cable and Figure 1 of Van Vliet are copied below.

117. The equipment in Van Vliet cannot be arranged according to Cable's arrangement because Van Vliet has different equipment that would differ in size and shape from Cable's. Therefore, a POSITA would not have expected the arrangement of equipment in Cable to improve Van Vliet in the same way. The combination would not have yielded predictable results.

IPR2023-01237, EX2004 (Rodgers Declaration) at ¶¶ 116-117

"But we do not ignore the modifications that one skilled in the art would make to a device borrowed from the prior art. *Optivus Tech., Inc. v. Ion Beam Applications, S.A.*, 469 F.3d 978, 989-90 (Fed. Cir.2006). One skilled in the art would size the components from Teague appropriately for Icon's application, therefore producing an embodiment meeting Icon's claims."

In re ICON Health & Fitness, Inc., 496 F.3d 1374, 1382 (Fed. Cir. 2007)
(cited at IPR2023-01237, Paper 25 (Reply) at 9-10)

Dr. Durham: How POSITA Would View *Cable* and *Van Vliet*

137. As discussed above in Sections X.A.2 and X.B.2, both *Van Vliet* and *Cable* describe a mobile truck/trailer system for delivery of fuel, lubricants or other hydrocarbons. Further, both references use deployable hoses stored on reels, arranged so that multiple hoses can deliver fuel or other fluids to the receiving equipment at the same time. In both references, to deliver the fluids, the hoses are "pulled out" from the reels and extending to the receiving equipment, and then "reeled up" onto the reels for storage or transportation. A POSITA would have found it obvious to combine *Cable* and *Van Vliet* at least due to their commonalities. Further, a POSITA would have been motivated to apply *Cable*'s teaching of a walkable reel deployment compartment with a central aisle walkway, and reels deployed on opposing sides of the walkway adjacent to the sidewalls, to the trailer of *Van Vliet* to allow *Van Vliet*'s system to be more easily traversable by operators for the purpose of repairs, maintenance, and/or physical inspection. Further, a POSITA would have been motivated to apply *Cable's* teaching of an occupant compartment separated by an interior wall, and accessible via the interior walkway (and exterior doors at the rear of the truck/trailer) at least to provide a separate occupant compartment without direct exposure to the fluids stored in the compartment with tanks.

IPR2023-01237, EX1003 (Durham Declaration) at ¶ 137

Dr. Durham: How POSITA Would View *Cable* and *Van Vliet* (cont.)

trailer with the outlets **22** extending inward of the trailer wall."[155] To the extent that *Van Vliet* does not explicitly disclose an central aisle for access to the valves, *Van Vliet* does note that the spatial orientation of the reels **30**, manifolds **36** and **38**, tanks **18** and **20**, and other equipment shown "is a matter of design choice for the manufacturer and will depend on space requirements."[156] A POSITA would then look to other references, such as *Cable* for spatial configurations that allow for various equipment, such as valves, manifolds and pumps to be "readily accessible" as taught by *Van Vliet*. A POSITA, reading *Cable* would have easily understood that an aisle walkway, such as the one taught by *Cable* would be an effective and simple way to allow an operator easy access to manual valves inside the trailer, as taught by *Van Vliet*. A POSITA would have further understood that an outside door would be useful for accessing the aisle walkway from the outside of the trailer, and an inside door would be useful for accessing the aisle walkway from the driver's compartment or control cabin.[157] Further, a POSITA would have understood that separating the compartment with tanks, valves and hoses from the occupant compartment, such as taught in *Cable* would not only be a conventional way of arranging a vehicle,[158] but would further have the advantage of separating the occupant from the combustible liquids contained in the tanks, and would keep any spills from directly impacting equipment, such as electrical or electronic equipment (e.g. *Van Vliet's* controller). Lastly, a POSITA would have understood that positioning the reels on either side of the aisle walkway would allow an operator to access more reels at any given location on the walkway than a configuration with reels on only one side of the walkway. Accordingly, a POSITA would have been motivated to modify *Van Vliet*'s system to include *Cable*'s aisle configuration to be more easily traversable on foot and would have been motivated to incorporate *Cable's* door and wall configuration to gain the advantages of such a configuration described above.

IPR2023-01237, EX1003 (Durham Declaration) at ¶ 139

Dr. Durham: How POSITA Would View *Cable* and *Van Vliet* (cont.)

146. Like the example of a mobile trailer depicted in the '805 Patent, *Cable*'s van truck is a mobile wheeled ground vehicle with a rear compartment that includes walls, a closed top, and a width.[169] From a functional standpoint, there is no significant difference between the teachings of a trailer and a van truck. A POSITA would have understood that the van truck of *Cable* provides the same function as the trailer in *Van Vliet* and the '805 Patent. As an example, both the trailer (with a tractor to pull it) and the van truck transport equipment and materials from location to location. Further, both the trailer and the van truck protect equipment from the elements and allow operators to work with the equipment so protected. Finally, both the van truck and the trailer provide walls, for example side walls, for mounting equipment in a desired spatial orientation. A POSITA would have understood that *Cable's* van truck would be interchangeable with a mobile trailer, for example, a trailer as disclosed in *Van Vliet*, and that an internal layout like that shown in the rear compartment of the van truck in *Cable* could be used in the trailer of *Van Vliet*. Accordingly, *Van Vliet* discloses, and the combination of *Van Vliet* and *Cable* renders obvious the limitations of Claim 1[a].

IPR2023-01237, EX1003 (Durham Declaration) at ¶ 146

#2: Accessibility for Maintenance

"reeled up" onto the reels for storage or transportation. *Id.* A POSITA would have been motivated to apply *Cable*'s teaching of a walkable reel deployment compartment with a central aisle walkway, and reels deployed on opposing sides of the walkway adjacent to the sidewalls, to the trailer of *Vliet* to make *Vliet*'s system more easily traversable by operators for repairs, maintenance, and/or physical inspection. *Id.* Further, a POSITA would have been motivated to apply *Cable's*

IPR2023-01237, Paper 3 (Petition) at 21

A POSITA would have recognized the advantages of the central aisle with equipment located on opposed sides of the aisle, *e.g.*, to easily traverse the tank compartment for maintenance or operations. EX1003, ¶138. Further, a POSITA

IPR2023-01237, Paper 3 (Petition) at 23

See EX1003, ¶139. A POSITA, reading *Cable* would have understood that an aisle walkway, such as the one taught by *Cable* would be an effective and simple way to allow an operator to access manual valves inside the trailer. *Id.*

IPR2023-01237, Paper 3 (Petition) at 24

PO Conflates the Appropriate Legal Standards

workplace. A walkway that doubles as a storage area would not be acceptable, as items stored in the aisle walkway would block the emergency exit route, which is also likely to draw the attention of a site safety supervisor that inspects the equipment before a frac operation starts. Ex. 2004 at ¶¶136-137, 141-142. Petitioner did not address this teaching of Cable, which would discourage a POSITA from modifying Van Vliet according to Cable. . A prior art reference must be considered in its entirety, i.e., as a whole, including portions that would lead away from the claimed invention. *W.L. Gore & Assoc., Inc. v. Garlock, Inc.*, 721 F.2d 1540, 220 USPQ 303 (Fed. Cir. 1983), *cert. denied*, 469 U.S. 851 (1984).

IPR2023-01237, Paper 13 (Patent Owner's Response) at 21-22

"But we do not ignore the modifications that one skilled in the art would make to a device borrowed from the prior art. *Optivus Tech., Inc. v. Ion Beam Applications, S.A.*, 469 F.3d 978, 989-90 (Fed. Cir.2006). One skilled in the art would size the components from Teague appropriately for Icon's application, therefore producing an embodiment meeting Icon's claims."

In re ICON Health & Fitness, Inc., 496 F.3d 1374, 1382 (Fed. Cir. 2007)
(cited at IPR2023-01237, Paper 25 (Reply) at 9-10)

***See also* IPR2023-01237, Paper 25 (Reply) at 5-7**

Dr. Durham: POSITA Ability to Implement an Aisle Walkway

140. A POSITA would have had a reasonable expectation of success in combining *Van Vliet* with *Cable*. As explained above, *Van Vliet* and *Cable* describe similar systems for delivering fluid from a mobile trailer via hoses to multiple destinations. Further, the elements incorporated into *Van Vliet* from *Cable* are either already present in *Van Vliet* (*e.g.*, reels) or were simple elements well-known in the art at the time of the '805 Patent. Incorporating *Cable*'s aisle walkway, doors, and reel configuration into *Van Vliet*'s mobile fuel delivery system would merely involve combining prior art elements according to known methods to yield predictable results.

IPR2023-01237, EX1003 (Durham Declaration) at ¶ 140

173. A POSITA would have had no trouble implementing Cable's arrangement to the trailer of *Van* Vliet, as it is simply a predictable variation of the spatial orientation taught by *Cable*, using the known equipment and techniques of *Van Vliet*. Accordingly, the combination of *Van Vliet* and *Cable* discloses or at least suggests the arrangement of reels and aisle claimed in 1[h], and the combination renders the claim obvious.

IPR2023-01237, EX1003 (Durham Declaration) at ¶ 173

PO's Attempted Rebuttal Fails

2004 at ¶120-121. Given the 8 ft. width (96 inches) of Van Vliet's container, two reels across from each other on opposed sidewalls, oriented as in Cable, would take up at least 83 inches (41.5 x 2) of the trailer width, leaving only 13 inches for an "aisle," which by Dr. Durham's own admission would not meet the OSHA safety requirement of being at least 28 inches. Ex. 2004 at ¶122. Not only would

IPR2023-01237, Paper 13 (Patent Owner's Response) at 16

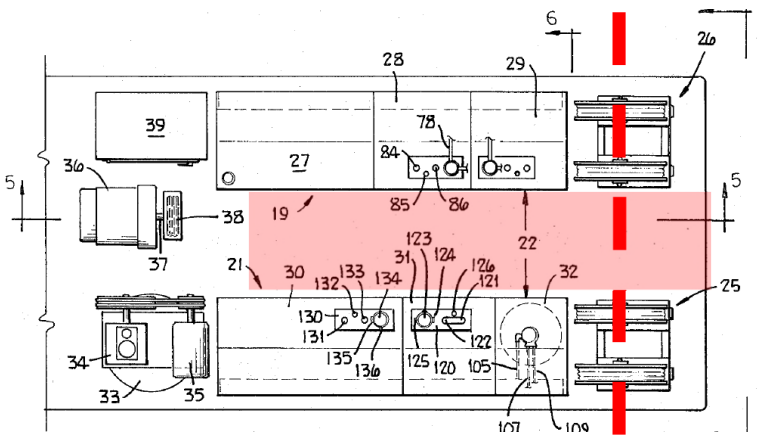

IPR2023-01237, EX1005 (Cable) at Fig. 2 (annotated);
see also id., Paper 25 (Reply) at 7 n. 3

127. A POSITA also would have recognized that arranging the reels of Van Vliet as in Cable would put undue wear and stress on the hoses and reels. The reels of Cable are oriented such that the axes of the spindles about which the reels rotate is transverse (i.e., perpendicular) to the length of the aisle between the reels in Cable's truck. [Ex. 1003, Figs. 2 and 4; Ex. 2012 - Pages 117-118]. Arranging the reels of Van Vliet according to Cable, with the axes of the spindles transverse to the aisle, means that the reels of Van Vliet would all face toward the rear of Van Vliet's container. Therefore, in order to be deployed out of the sidewall in Van Vliet, each hose would need to turn 90° from its reel. This would cause the hose to come into the reel at a steep angle, which would be likely to i) cause the hose to rub/wear on the edge of the spindle, ii) interfere with the winding of the hose, iii) increase stress on the hose from being pulled around a 90° bend, and/or iv) increase winding resistance and stress on the reel. In order for the hose to be

IPR2023-01237, EX2004 (Rodgers Declaration) at ¶ 127

PO's Attempted Rebuttal Fails

We find this argument unavailing for the simple reason that FAS misunderstands the challenge as articulated by Permian. Although Permian points to Cable's "reel-and-aisle arrangement" for element 1[h], Permian also notes that, in combining the teachings of Van Vliet and Cable, "*Vliet* already teaches that 'one manifold 36 may supply fluid to equipment 10 lined up on one side of a well, while another manifold 38 may supply fluid to equipment 10 lined up on the other side,'" such that "[one skilled in the art] would have understood this disclosure describes two groups of hoses each deployable through one of two opposite side walls." Pet. 23 (quoting Ex. 1004 ¶ 24), 46 (citing Ex. 1003 ¶¶ 221–223). To that end, Permian relies on *both* Van Vliet and Cable, that is, Van Vliet for its teaching of arranging groups of reels along opposing side walls of a trailer, and Cable's teaching of arranging reels on opposite sides of a trailer. Thus, we reject FAS's attempt to overcome Permian's reasoning by focusing on Cable individually.

IPR2023-01237, Paper 9 (Institution Decision) at 9

4	Q.	Okay. And so you agree that Cable teaches orienting
5		the spindle perpendicular to the axis or the direction
6		in which those hoses are going to be deployed.
7	A.	Yes.

IPR2023-01237, EX1049 (Rodgers Depo.) at 203:4-7

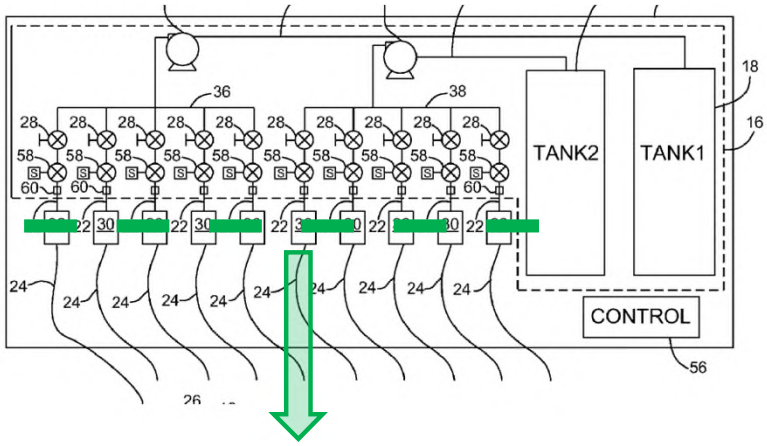

IPR2023-01237, EX1004 (Van Vliet) at Fig. 1 (annotated);
see also id., Paper 25 (Reply) at 7 n. 3

Dr. Durham: Orientation and Layout of Reels Was Obvious

Industry and Health Standards" are most applicable. One of these standards dictates the minimum width of "exit routes" in the workplace. For example, because a human operates the manual shut-off valves from *Van Vliet* (valve **28**) there must be an exit path for the operator to evacuate such as in an emergency. [220]OSHA Occupational Safety and Health Standards ("OSHS") require an exit path that is at least 28 inches wide at all points. This would be the minimum width of the "aisle" or the *Van Vliet/Cable* combination. As one example of typical hose reels, the reels described in *Coxreels* have a 17 and 5/8" diameter.[221] Accordingly, the *Van Vliet* system using a typically available reel diameter (17 5/8") and a minimum regulatory aisle width (28") would have a ratio between the walkway and the reel diameter of 1.588, which falls within the range recited in Claim 4 (at least 1.3).

181. In view of the above, it would have been an obvious matter of design choice for a POSITA (*e.g.*, to comply with relevant safety standards) to design the distribution station of *Van Vliet*, as modified by *Cable*, so that the aisle width is greater than the reel diameter by a factor of at least 1.3, based on the regulatory requirements and commercially available reel sizes.

IPR2023-01237, EX1003 (Durham Declaration) at ¶¶ 180-181

#3: Facilitate Fueling Equipment from Both Sides

supply fluid to equipment 10 lined up on the other side." EX1004, [0024]. A POSITA would have recognized the benefits *Cable*'s arrangement so that reel equipment on one side of the well (*e.g.*, the passenger's side of the vehicle) are fed from reels on the same side of the vehicle, while equipment on the other side of the well is fed from reels on the opposite side of the vehicle. EX1003, ¶138. This would allow the vehicle to be backed in directly opposite the well and allow for deployment of hoses to equipment on both sides of the well with limited crossing or tangling of hoses. *Id.*

IPR2023-01237, Paper 3 (Petition) at 23; *see also* EX1003 (Durham Declaration) at ¶¶ 138, 172.

'805 Patent: Disputed Issues

A. A POSITA would have been motivated to combine Van Vliet and Cable
- **Grounds 1, 3, and 4**

B. Van Vliet discloses or renders obvious Claim 17[h]
- **Grounds 1, 2, and 5**

C. AFD discloses or renders obvious Claim 17[h]
- **Ground 5**

D. A POSITA would have been motivated to combine Van Vliet and Coxreels
- **Grounds 4, 7, and 8**

Van Vliet Discloses Claim 17(h): Hoses Deployed Through Both Trailer Side Walls

231. *Van Vliet* also teaches or discloses element 17[h]. *Van Vliet* discloses a mobile trailer having first and second opposed trailer side walls.[263] The hoses of *Van Vliet* "are run out to equipment 10 through an opening in the trailer wall in whatever arrangement the well operator has requested that the fracturing equipment be placed around the well."[264] In an embodiment, *Van Vliet*'s manifolds and associated hoses are arranged such that "one manifold 36 may supply fluid to equipment 10 lined up on one side of a well, while another manifold 38 may supply fluid to equipment 10 lined up on the other side."[265] A POSITA would have understood this disclosure describes two groups of hoses each deployable through one of two opposite side walls. For example, the diagram below shows the trailer of *Van Vliet* in one configuration, consistent with the disclosure of *Van Vliet*, whereby *Van Vliet*'s trailer is backed toward the well, and is feeding equipment on one side of the well from manifold **36** and equipment on the other side of the well from manifold **38**. Also, consistent with *Van Vliet*, the hoses **24** are deployed out to equipment **10** through the respective sidewalls.[266]

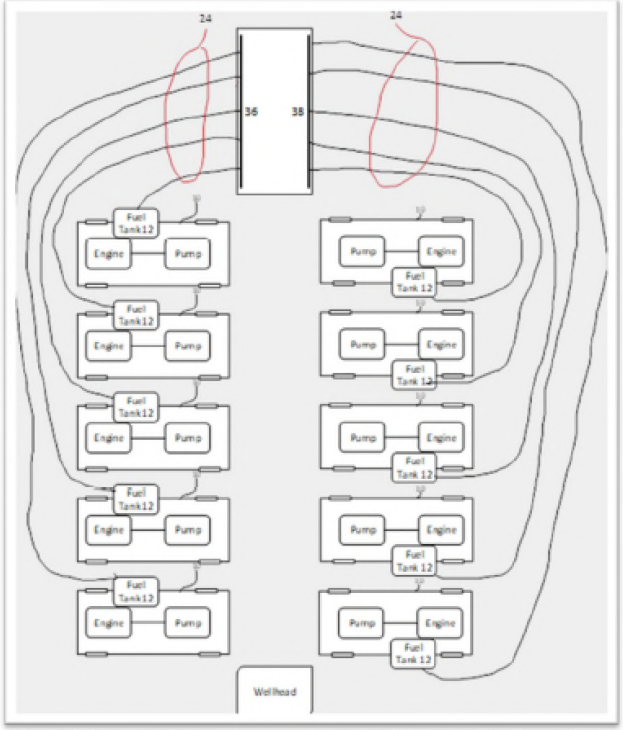

IPR2023-01237, EX1003 (Durham Declaration) at ¶ 231; *see also* Paper 3 (Petition) at 47

Van Vliet also renders Claim 17[h] obvious

233. Alternatively, to the extent that *Van Vliet* does not explicitly disclose hoses deployable through two opposite side walls, it would have been obvious to a POSITA to arrange the system of *Van Vliet* such that the hoses are deployed through two opposite side walls. *Van Vliet* discloses that its hose arrangement may be "whatever arrangement the well operator has requested."[267] *Van Vliet* further discloses that each of its two manifolds and associated hoses may be assigned to or associated with a respective opposite side of a well.[268] The most obvious arrangement for a POSITA seeking to connect each of *Van Vliet*'s manifolds to a respective opposite side of a well would be an arrangement in which the trailer faces directly toward or away from the well and the hoses extend from each side of the trailer to a corresponding side of the well.[269]

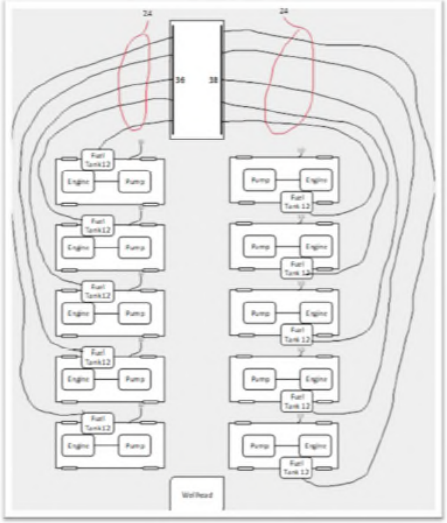

OR

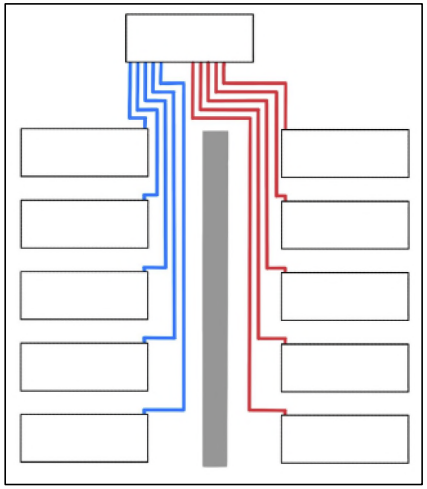

IPR2023-01237, EX1003 (Durham Declaration) at ¶233 (left figure); EX2004 (Rodgers Declaration) at ¶134 (right figure); *see also* Paper 3 (Petition) at 47-48

Claim 18: *Van Vliet* renders obvious Claim 18

17. A distribution station comprising:
a mobile trailer;
a pump on the mobile trailer;
first and second manifolds on the mobile trailer and fluidly connected with the pump;
a plurality of reels on the mobile trailer;
a plurality of hoses connected, respectively, with the reels, wherein a portion of the reels are connected with the first manifold and another portion of the reels are connected with the second manifold;
a plurality of valves on the mobile trailer, each of the valves situated between one of the first or second manifolds and a respective different one of the hoses; and
a plurality of fluid level sensors, each of the fluid level sensors being associated a respective different one of the hoses,
wherein the mobile trailer includes first and second opposed trailer side walls, and a first group of the hoses are deployable from the first trailer side wall and a second group of the hoses are deployable from the second trailer side wall.

18. The distribution station as recited in claim **17**, wherein the reels are arranged on first and second opposed sides in the mobile trailer such that there is an aisle walkway down the middle of the mobile trailer.

IPR2023-01237, EX1001 ('805 Patent) at Claims 17-18

The elements of claim 18 were obvious implementation details to incorporate in *Vliet's* system. *Vliet* teaches arranging the hoses to be deployable from each opposing side wall of the trailer. *See* §VII.B.1, *supra*. A POSITA would have recognized that, in that arrangement, the reels would not be arranged along only one side wall at least because this would result in a tripping hazard that would obstruct the exit route. EX1003, ¶234. Thus, the most obvious arrangement would be to arrange the reels carrying the hoses along the first and second opposed side walls of the trailer. *Id.*

. . .

and formed as part of the manifolds 36, 38."). A POSITA implementing *Vliet*'s system would have recognized that in order to implement the manually-operated valves, an operator would need to have access to them. *See* EX1003, ¶¶235-236. With reels and hoses arranged on both sides of the trailer, it would have been obvious to include an aisle walkway down the middle of the trailer to provide access to these valves. *Id.*

IPR2023-01237, Paper 3 (Petition) at 48-49

'805 Patent: Outline of Arguments

A. A POSITA would have been motivated to combine Van Vliet and Cable
- Grounds 1, 3, and 4

B. Van Vliet discloses or renders obvious Claim 17[h]
- Grounds 1, 2, and 5

C. **AFD discloses or renders obvious Claim 17[h]**
- **Ground 5**

D. A POSITA would have been motivated to combine Van Vliet and Coxreels
- Grounds 4, 7, and 8

AFD Discloses Claim 17[h]: Hoses Deployed Through Both Trailer Side Walls

Dr. Durham's Evidence

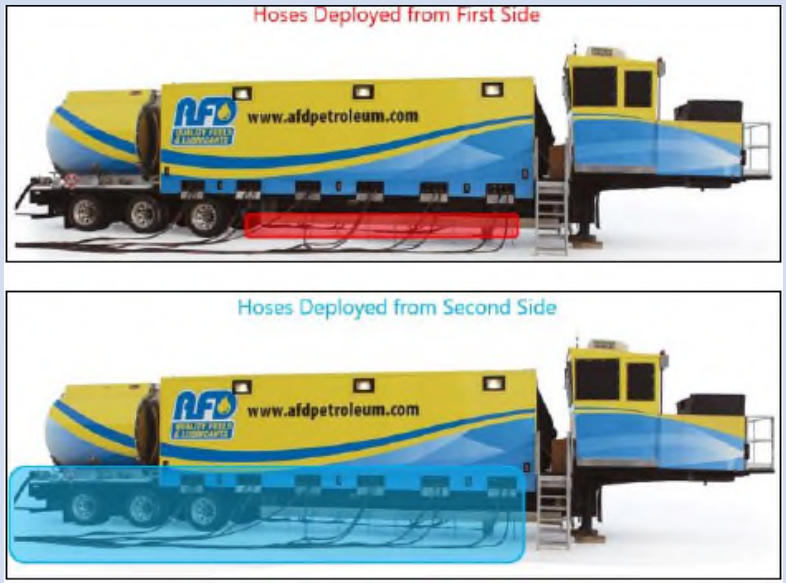

IPR2023-01237, EX1003 (Durham Declaration) at ¶ 303

Dr. Rodgers' Theory

192. The far side is not visible in the photo, and it is therefore not clear where those hoses are deployed from. In fact, it is clear that the photo was modified/cropped to at least remove the background, as is evident from the lack of any background in the photo of AFD's system at p. 2, in which other equipment on the site should be visible. [Ex. 1007].

193. The other two photos on pages 3 and 4 of AFD show other equipment and structures in the background. [Ex. 1007]. Since no background is shown, it is plausible that there was another system or piece of equipment behind the depicted trailer that was removed when the photo was modified.

194. A POSITA therefore would have understood that just because the hoses are visible underneath the system in the first photo, this does not mean that those hoses are coming out of the depicted system.

IPR2023-01237, EX2004 (Rodgers Declaration) at ¶¶ 192-193

AFD Discloses Claim 17[h]: Hoses Deployed Through Both Trailer Side Walls

Dr. Durham's Evidence

Only two hoses shown in each opening (6 openings per side):

IPR2023-01237, EX2004 (Rodgers Declaration) at ¶196

Huge Capacity

10,000 L fuel tank allows for seamless mobilization and demobilization as well as reducing start times. The main fuel tank has an internal pump to attach to an alternative fuel source in addition to connections to the 24 fuel reels.

IPR2023-01237, EX1007 (AFD) at 2

Dr. Rodgers' Theory

195. Further, the AFD photo suggests to a POSITA that all 24 hoses would have been deployed from the one (visible) side. In the annotated excerpt below there is a window where hoses exit through the trailer wall. Each window has rectangular hose guides through which the hoses deploy. In each window there are four hose guides. Two of those hose guides have hoses coming out and two other hose guides do not have hoses coming out. [Ex. 1007].

IPR2023-01237, EX2004 (Rodgers Declaration) at ¶¶ 195, 196

Claim 18: *Van Vliet* + *AFD* discloses and/or renders obvious Claim 18

17. A distribution station comprising:
a mobile trailer;
a pump on the mobile trailer;
first and second manifolds on the mobile trailer and fluidly connected with the pump;
a plurality of reels on the mobile trailer;
a plurality of hoses connected, respectively, with the reels, wherein a portion of the reels are connected with the first manifold and another portion of the reels are connected with the second manifold;
a plurality of valves on the mobile trailer, each of the valves situated between one of the first or second manifolds and a respective different one of the hoses; and
a plurality of fluid level sensors, each of the fluid level sensors being associated a respective different one of the hoses,
wherein the mobile trailer includes first and second opposed trailer side walls, and a first group of the hoses are deployable from the first trailer side wall and a second group of the hoses are deployable from the second trailer side wall.

18. The distribution station as recited in claim **17**, wherein the reels are arranged on first and second opposed sides in the mobile trailer such that there is an aisle walkway down the middle of the mobile trailer.

IPR2023-01237, EX1001 ('805 Patent) at Claims 17-18

AFD further teaches or suggests "an aisle walkway down the middle of the mobile trailer." In light of the arrangement discussed above, a POSITA would have understood that the system shown in *AFD* must be arranged to have an aisle walkway between the reels for maintenance (*e.g.*, replacing reels, attaching hoses, operating the reels to retract hoses, etc.) and safety (*e.g.*, to provide access to manual shut-off valves). *See* EX1003, ¶¶278-279. *AFD*'s set of stairs (green below) for access to the main body of the mobile trailer and flap (yellow below) that has been partially removed to allow access to the main body of the trailer further confirm to a POSITA that the system in *AFD* includes an aisle walkway down the middle of the mobile trailer. EX1003, ¶279; EX1007 (excerpted, annotated below).

. . .

Alternatively, to the extent that *AFD* does not disclose that element, it would have been obvious in view of *Vliet* to incorporate. *See* §VII.B.2, *supra*; EX1003, ¶280.

IPR2023-01237, Paper 3 (Petition) at 65-66

'805 Patent: Disputed Issues

A. A POSITA would have been motivated to combine Van Vliet and Cable
- Grounds 1, 3, and 4

B. Van Vliet discloses or renders obvious Claim 17[h]
- Grounds 1, 2, and 5

C. AFD discloses or renders obvious Claim 17[h]
- Ground 5

D. **A POSITA would have been motivated to combine Van Vliet and Coxreels**
- **Grounds 4, 7, and 8**

Grounds 4, 7, and 8 rely on *Van Vliet* for reels

Ground	Type	Summary
1	§103	Claims 1-22 are rendered obvious by *Vliet* in view of *Cable*
2	§102/103	Claims 17 and 18 are anticipated and/or rendered obvious by *Vliet*
3	§103	Claims 9-10 are rendered obvious by *Vliet* in view of *Cable* and *AFD*
4	§103	Claims 4, 11, 12, and 20 are rendered obvious by *Vliet* in view of *Cable* and *Coxreels*
5	§103	Claims 1, 7-10, 13-18, and 22 are rendered obvious by *Vliet* in view of *AFD*
6	§103	Claims 2-3, 6, and 19 are rendered obvious by *Vliet* in view of *AFD* and *Lowrie*
7	§103	Claims 4, 5, 20 and 21 are rendered obvious by *Vliet* in view of *AFD*, *Lowrie*, and *Coxreels*
8	§103	Claims 11 and 12 are rendered obvious by *Vliet* in view of *AFD* and *Coxreels*

IPR2023-01237, Paper 3 (Petition) at 5

1. A distribution station comprising:
a mobile trailer;
a pump on the mobile trailer;
a manifold on the mobile trailer and connected with the pump;
a plurality of reels on the mobile trailer;

IPR2023-01237, EX1001 ('805 Patent) at Claim 1

Grounds 4, 7, and 8 rely on *Coxreels* for dimensions

Ground	Type	Summary
1	§103	Claims 1-22 are rendered obvious by *Vliet* in view of *Cable*
2	§102/103	Claims 17 and 18 are anticipated and/or rendered obvious by *Vliet*
3	§103	Claims 9-10 are rendered obvious by *Vliet* in view of *Cable* and *AFD*
4	**§103**	**Claims 4, 11, 12, and 20 are rendered obvious by *Vliet* in view of *Cable* and *Coxreels***
5	§103	Claims 1, 7-10, 13-18, and 22 are rendered obvious by *Vliet* in view of *AFD*
6	§103	Claims 2-3, 6, and 19 are rendered obvious by *Vliet* in view of *AFD* and *Lowrie*
7	**§103**	**Claims 4, 5, 20 and 21 are rendered obvious by *Vliet* in view of *AFD*, *Lowrie*, and *Coxreels***
8	**§103**	**Claims 11 and 12 are rendered obvious by *Vliet* in view of *AFD* and *Coxreels***

IPR2023-01237, Paper 3 (Petition) at 5

11. The distribution station as recited in claim **1**, wherein the aisle walkway has an aisle width and the reels have a reel diameter, and the aisle width is greater than the reel diameter by a factor of at least 1.3.

IPR2023-01237, EX1001 ('805 Patent) at Claim 11

Overview of *Coxreels*

5/31/23, 6:15 PM Coxreels 1125 Series "Competitor" hand crank and motorized hose reels have the features demanded by industry professionals. |

The Wayback Machine - https://web.archive.org/web/20140408035634/http://www.coxreels.com:80/products/hand-crank/1125-series

CURRENT QUOTE (0)

HOME ABOUT COXREELS CONTACT US FIND A DISTRIBUTOR

Search by Keyword(s) or Model

REEL SELECTOR | PRODUCTS | INDUSTRIES | NEW RELEASES | LITERATURE | KNOWLEDGE CENTER | REQUEST A QUOTE

HOME PRODUCTS HAND-CRANK 1125-SERIES

1125 SERIES

1125 Series hand crank and motorized hose reels have the features demanded by industry professionals. The industry preferred design features a sturdy one piece all welded "A" frame base, low profile outlet riser and open drum slot design provides a non-crimping, flat smooth hose wrap.

SWIVEL

- External fluid path with machined from solid brass 90° full-flow NPT swivel inlet (Nickel plated steel swivel on 1" models)
- Swivel Seals: NITRILE (AFLAS on 1" models)

DESIGN & STRUCTURE

- All welded steel "A" frame construction for superior reel structure
- Exclusive low profile outlet riser & open drum slot design for flat smooth hose wrap
- Permanently lubricated self-aligning pillow block bearings for trouble-free & smooth rotation
- Adjustable tension brake to prevent "free-wheeling" during operation
- Long handled locking pin to secure reel from rotation during transport or storage

RETRACTION

Choice of:

- Solid steel direct hand crank with smooth round handle
- Reliable bevel gear hand crank with removable handle for compact storage (model with suffix -C)

SIGNATURE FEATURES

- Professional grade heavy duty steel construction
- Durable proprietary CPC™ powder coat finish
- CNC robotically spun and rolled discs with rolled edges provide strength, safety, and durability
- Industry leading 2 year manufacturer's limited warranty
- Made in the U.S.A. – Sold & Supported Worldwide

POSSIBLE FIELDS OF APPLICATION

- Industrial Plant & Ground Maintenance
- Fire Suppression
- Farming
- Construction Sites
- Landscaping
- Pest & Weed Control
- Golf Course Maintenance
- Air Compressor
- Washdown
- High-Flow Watering
- Hydro Seeding
- Pressure Washing
- Agricultural Spraying
- Chemical Fluid Transfer

MODELS ACCESSORIES APPLICATION SHOTS VIDEOS

TECHNICAL DOCUMENTS

Product manual - DOWNLOAD

Exploded drawings - DOWNLOAD

Click "Add to Quote" to view compatible accessories

REEL			CAPACITY			GPM CAPACITY				SIZE INCHES (Overall Dimensions)			
MODEL	LBS	HOSE	I.D	O.D	FT	I.D	O.D	FT	PSI	W	H	L	
1125-6-100	36	N	1/2"	7/8"	100	3/8"	3/4"	140'	3000	19-1/2"	16-3/4"	17-5/8"	Add to Quote
1125-6-200	39	N	1/2"	7/8"	200	3/8"	3/4"	300'	3000	25-1/2"	16-3/4"	17-5/8"	Add to Quote
1125-6-325	48	N	1/2"	7/8"	325	3/8"	3/4"	450'	3000	31-1/2"	16-3/4"	17-5/8"	Add to Quote
1125-6-450	52	N	1/2"	7/8"	450	3/8"	3/4"	625'	3000	37-1/2"	16-3/4"	17-5/8"	Add to Quote
1125-6-600	59	N	1/2"	7/8"	600	3/8"	3/4"	700'	3000	41-1/2"	16-3/4"	17-5/8"	Add to Quote
1125-6-50	38	N	3/4"	1-1/4"	50	1/2"	7/8"	100'	3000	20-3/4"	16-3/4"	17-5/8"	Add to Quote
1125-6-100	42	N	3/4"	1-1/4"	100	1/2"	7/8"	200'	3000	26-3/4"	16-3/4"	17-5/8"	Add to Quote
1125-6-175	50	N	3/4"	1-1/4"	175	1/2"	7/8"	325'	3000	32-3/4"	16-3/4"	17-5/8"	Add to Quote

PERMIAN GLOBAL, INC. AND MANTICORE FUELS, LLC EXHIBIT 1008, Page 1

https://web.archive.org/web/20140408035634/http://www.coxreels.com/products/hand-crank/1125-series 1/2

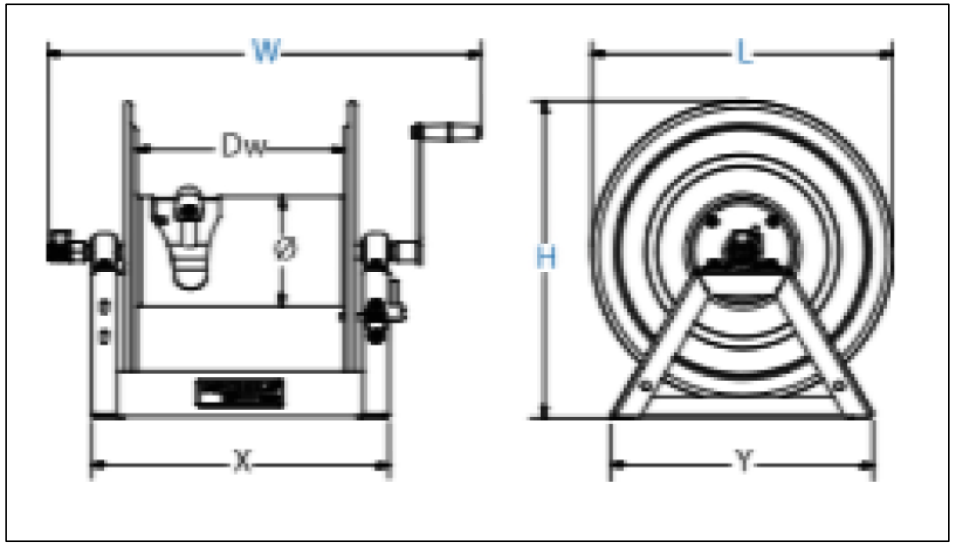

IPR2023-01237, EX1008 (Coxreels)

A POSITA would have been motivated to use *Coxreels'* information with *Van Vliet* or *AFD*

Based on *Vliet*'s and *Cable*'s teachings to store hoses on reels, a POSITA would have been motivated to reference information on commercially available hose reels, such as the ones disclosed in *Coxreels* when designing the layout of the fuel distribution station. EX1003, ¶249. Information contained in *Coxreels*, such as dimensions and capacities of commercially available reels, would have been helpful to the designer when evaluating the size, layout, location, and spatial orientation of equipment on the mobile distribution station. *Id.*

IPR2023-01237, Paper 3 (Petition) at 54-55

PO's Response on *Coxreels*

VI. GROUNDS 4, 7, AND 8: A POSITA WOULD NOT MODIFY VAN VLIET WITH COXREELS.....23

A. The Coxreels 1125 Series reel is not for fracking or automated fuel delivery.....24

B. A POSITA would have recognized that the Coxreels 1125 Series reel would have been unsuited for an automated fueling station as in Van Vliet been unsuited for an automated fueling station as in Van Vliet unsuited for an automated fueling station as in Van Vliet.....25

C. The Coxreels 1125 Series reel would have resulted in an undesirable operating configuration. 28

IPR2023-01237, Paper 13 (Patent Owner's Response) at i

Outline of Arguments

I. Overview of the Patents
II. Summary of the Grounds & Overview of Disputes
III. '805 Patent
IV. **'118 Patent**
V. '955 Patent

'118 Patent: Summary of the Grounds

Ground	Type	Summary
1	§§ 102/103	Claims 1-3 are anticipated by and/or rendered obvious by *Van Vliet*.
1A	§ 103	Claims 1-3 are rendered obvious by *Van Vliet* in view of *Coxreels*
2	§ 103	Claims 4-18 are rendered obvious by *Van Vliet* in view of *Shoap*
2A	§ 103	Claims 4-9 and 15-18 are rendered obvious by *Van Vliet* in view of *Coxreels* and *Shoap*
3	§ 103	Claims 12-13 are rendered obvious by *Van Vliet* in view of *Shoap* and *Hosecraft*

IPR2023-10236, Paper 3 (Petition) at 5

'118 Patent: Disputed Issues

A. A POSITA would have been motivated to combine Van Vliet and Coxreels
- **Grounds 1A and 2A**

B. A POSITA would have been motivated to [1] combine Van Vliet and Shoap, and [2] modify *Shoap* to include separate tube and sleeve
- **Ground 2, 2A, and 3**

C. The combination of Van Vliet and Shoap discloses Claim 7
- **Ground 2 and 2A**

'118 Patent: Disputed Issues

A. A POSITA would have been motivated to combine Van Vliet and Coxreels

- Grounds 1A and 2A

B. A POSITA would have been motivated to [1] combine Van Vliet and Shoap, and [2] modify Shoap to include separate tube and sleeve

- Ground 2, 2A, and 3

C. The combination of Van Vliet and Shoap discloses Claim 7

- Ground 2 and 2A

Grounds 1A & 2A

2. Claims 1[p]-1[d]

For the same reasons discussed with respect to Ground 1 above, and incorporated herein by reference, *Van Vliet* discloses Claim 1[p]-1[d]. *See supra* Section VIII.A.1-5; *see also* EX1003, ¶155.

IPR2023-01236, Paper 3 (Petition) at 37

5. Claim 1[d]: "a plurality of reels on the mobile trailer;"

In *Van Vliet*'s fuel delivery system, "[t]he hoses 24 are preferably stored on reels 30." EX1004, [0015]; *see also* EX1003, ¶¶114-115. FIG. 1 below shows at least ten "reels 30" in the fuel delivery system 14:

IPR2023-01236, Paper 3 (Petition) at 25

A POSITA would have been motivated to combine *Van Vliet* with *Coxreels'* teachings

It would have been obvious to a POSITA to combine *Coxreels*' teaching of a specific reel with *Van Vliet*. *See* EX1003, ¶¶149-153. *Van Vliet* discloses the use of reels. EX1004, [0015]. A POSITA designing a system of *Van Vliet* would have looked to commercially-available reel components like those described in *Coxreels*, among other reasons, as a cost-effective and readily-available option (*e.g.*, as compared to a custom-made reel) for that system. *Coxreels*' reel was marketed for use in the same industry as *Van Vliet*'s system, and commonly used in the fracking fuel delivery industry at the time of the '118 Patent. EX1003, ¶150. A POSITA would have recognized the advantage of using *Coxreels*' reel in *Van Vliet*'s mobile fuel delivery system to connect *Van Vliet*'s hoses to *Coxreels*' reel flow passages. *Id.*

IPR2023-01236, Paper 3 (Petition) at 35-36

149. A POSITA would have been motivated to combine *Coxreels* with *Van Vliet*. *Coxreels* is in the same field of endeavor as *Van Vliet* (as well as the '118 Patent) and is directed to solving the same problem—using reels to support hoses for use in distributing hydrocarbon liquids.[199] *Coxreels* is therefore analogous art to *Van Vliet* as well as the challenged claims. A POSITA, based on the teachings of *Van Vliet* regarding storage of hoses on reels, would have been motivated to reference information on commercially available hose reels, such as the ones disclosed in *Coxreels* when designing the layout of the fuel distribution station. Information contained in *Coxreels*, such as dimensions and capacities of commercially available reels, would have been invaluable to the designer when evaluating the size, layout, location, and spatial orientation of equipment on the mobile distribution station.

IPR2023-01236, EX1003 (Durham Declaration) at ¶ 149

***See also* IPR2023-01236, Paper 27 (Reply) at 7-10**

A POSITA would have been motivated to combine *Van Vliet* with *Coxreels'* teachings

152. *Coxreels* describes the "1125 Series hand crank and motorized hose reels have the features demanded by industry professionals."[203] *Coxreels* describes "industry preferred design features [such as] a sturdy one piece all welded 'A' frame base, low profile outlet riser and open drum slot design provides a non-crimping, flat smooth hose wrap."[204] A POSITA would have recognized the advantage of using *Coxreels*' reels with *Van Vliet*'s system, particularly to allow for easy design and construction of a hose reel distribution system with commercially available components.

IPR2023-10236, EX1003 (Durham Declaration) at ¶ 152; *see also id.*, Paper 27 (Reply) at 7-10

A POSITA would have been motivated to combine *Van Vliet* with *Coxreels'* teachings

For instance, Permian proffers the testimony of its expert, which is unrebutted at this stage, that one skilled in the art would have selected Coxreels' reel as a readily-available option because "Coxreels [was] specifically market[ed] for use in the Oil industry" and provides the advantage of "a non-crimping, flat smooth hose wrap." Ex. 1003 ¶¶ 150–152 (citing Exs. 1005, 1035); *see also* Pet. 38 ("*Coxreels* also describes a 'low profile outlet riser, open drum slot design *for flat smooth hose wrap*'" (second emphasis added)). That evidence, at least on the current record, provides sufficient support for Permian's reason to combine the teachings of Van Vliet and Coxreels with a reasonable expectation of success of arriving at the claimed invention.

IPR2023-10236, Paper 11 (Institution Decision) at 11-12; *see also id.*, Paper 27 (Reply) at 7-10

A POSITA would have been motivated to combine *Van Vliet* with *Coxreels'* teachings

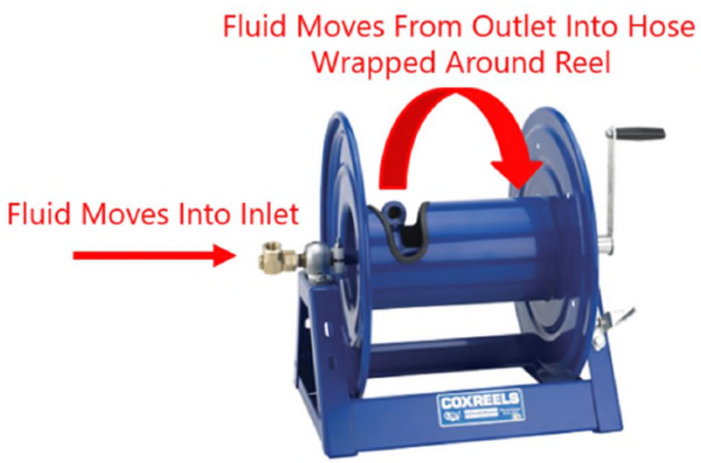

159. A POSITA would have recognized the "outlet riser" above, annotated in red, would have been the outlet, or discharge point, of fluid that flowed into the swivel inlet. A POSITA would have recognized that fluid in a system using *Coxreels* would be fluidly connected to the "external fluid path" via the brass inlet, pass through the reel body, and exit into a hose from the outlet made accessible by the "low profile outlet riser & open drum slot design."[213] This was a common and well-known arrangement of hoses and reels at the time of the '118 Patent.[214] [215]

IPR2023-10236, EX1003 (Durham Declaration) at ¶ 159; *see also* Paper 3 (Petition) at 37 & 39; *id.*, Paper 27 (Reply) at 7-10

It Would Have Been Obvious to Substitute *Coxreels'* Reel in *Van Vliet*

A POSITA would have had a reasonable expectation of success in combining *Coxreels* with *Van Vliet*. EX1003, ¶153. To combine *Van Vliet* with *Coxreels*, a POSITA would have needed only to select *Coxreels*' reel when choosing which reel to implement. *Id.* This would have been an obvious choice because *Coxreels*' reel was a readily available alternative suitable for use in the fuel delivery industry at the time of the '118 Patent. *Id.*, ¶150. Incorporating *Coxreels*' reel into *Van Vliet*'s mobile fuel delivery system would merely involve combining prior art elements according to known methods to yield predictable results—*e.g.*, enabling *Van Vliet*'s system to operate using a reel with flow passages running therethrough. *See* EX1003,

IPR2023-10236, Paper 3 (Petition) at 36

Patent Owner's Sur-reply Mischaracterizes Testimony

PO's Sur-Reply

Durham Original Declaration (Ex. 1003, by paragraph)	**Durham Deposition Testimony After Supplemental Declaration Ex. 1055 (Ex. 2047, by page and lines)**
150. "It would have been obvious to a POSITA to use the specific reel described in *Coxreels*' in the system of *Van Vliet*."	Q. Okay, it's not your position that it would have been obvious for a POSITA to incorporate a specific Coxreels reel into Van Vliet's mobile fuel delivery system? **A. Right.** [35:19-23]

IPR2023-01236, Paper 30 (Sur-reply) at 6

Dr. Durham's Deposition Testimony (cross exam)

19	Q.	Okay, it's not your position that it would have been
20		obvious for a POSITA to incorporate a specific
21		Coxreels reel into Van Vliet's mobile fuel delivery
22		system?
23	A.	Right.
24		MS. FLANNERY: Form.
25	A.	Although they certainly could, but that's not -- that
1		was not the goal of my testimony.

IPR2023-01236, EX2047 (Durham Deposition) at 35:19-36:1

Patent Owner's Sur-reply Mischaracterizes Testimony

PO's Sur-Reply

151. "Accordingly, a POSITA would have recognized the advantage of using *Coxreels*' reel in *Van Vliet*'s mobile fuel delivery system. This would have predictably resulted in enabling *Van Vliet*'s system to operate using a specified reel of a specified size. "	Q. Okay, so you're not proposing in this matter that a specific Coxreels reel would be incorporated into Van Vliet's mobile fuel delivery system? **A. Correct. It's the teachings of Coxreels that are important.** [35:14-18]

IPR2023-01236, Paper 30 (Sur-reply) at 6-7

Dr. Durham's Deposition Testimony (cross exam)

10	Q.	So Dr. Durham, which models of the Coxreels 1125
11		series reel have nitrile seals?
12	A.	Those models that are not 1 inch I.D.
13	Q.	And 1 inch I.D. would be -- if you look at the list of
14		the model numbers in Coxreels, when you say 1 inch
15		I.D., you're referring to the measurement listed in
16		the fourth column there?
17	A.	Yes, sir, the one marked I.D.
18	Q.	Well, there's another I.D. --
19	A.	Oh, well --
20	Q.	I just want to make sure that --
21	A.	Well, the same. I mean, the optional capacity --
22		well, okay, you're talking about model numbers, yes,
23		it's the model numbers from that fourth column
24		capacity, not the optional capacity.
25	Q.	So anything that doesn't have 1 inch in the fourth
1		column here would have a nitrile seal?
2	A.	Yes, that's the way I understand a POSITA would
3		understand Coxreels to state. It's a bad way to put
4		it. It's how a POSITA would read Coxreels.

IPR2023-01236, EX2047 (Durham Deposition) at 34:10-35:4

Patent Owner's Sur-reply Mischaracterizes Testimony

PO's Sur-Reply

151. "Accordingly, a POSITA would have recognized the advantage of using *Coxreels*' reel in *Van Vliet*'s mobile fuel delivery system. This would have predictably resulted in enabling *Van*	Q. Okay, so you're not proposing in this matter that a specific Coxreels reel would be incorporated into Van Vliet's mobile fuel delivery system? **A. Correct. It's the teachings of Coxreels that are important.**
Vliet's system to operate using a specified reel of a specified size. "	[35:14-18]

IPR2023-01236, Paper 30 (Sur-reply) at 6-7

Dr. Durham's Deposition Testimony (re-direct exam)

6	Q.	Do you recall your testimony earlier today when patent
7		owner's counsel was asking you and asked that you're
8		not proposing in this matter that a specific Coxreels
9		reel would be incorporated into Van Vliet's mobile
10		fuel delivery system. Do you recall that testimony?
11	A.	Yes.
12	Q.	And how does that relate to what you said here in your
13		declaration?
14	A.	Well, I -- I understood counsel's question to be
15		asking is there any specific model of the 1125 series
16		that would be uniquely applicable to Van Vliet; in
17		other words, only this one model, are you picking one
18		model out of the 20 or so in Coxreels, and my answer
19		is, no, any of these could have been valuable and
20		could have been dropped in.

IPR2023-01236, EX2047 (Durham Deposition) at 95:6-20

Patent Owner's Unsuitability Arguments

Indeed, the drawbacks of the brass inlet or AFLAS seal outweigh whatever (unidentified) benefits there are.[1] Brass can lead to fuel degradation and promote formation of gels and deposits that can plug lines, orifices, filter screens, and the like, causing injector malfunction or seizures. POR at 20. Thus, the brass inlet in Coxreels risks malfunction of downstream equipment. Even Dr. Durham acknowledges that such equipment is in the "red zone" and operates at high pressure and temperature, that safety is a "chief concern" on a well site, and that safety incidents can result in life-threatening injuries. Ex. 2047 at 20:17-23; 66:13-67:25. ("A red zone's an area around the high pressure pumping equipment and well heads, frac iron, things that contain high pressure" and "close proximity to the engines, the temperatures can be higher than the ambient temperature...[b]ecause the engines release heat."). A POSITA would therefore conclude that use of brass in a refueling system risks serious malfunctions and possible injury. In view of such serious

IPR2023-01236, Paper 30 (PO Sur-Reply) at 11

"But it is a commonplace fact that design decisions entail making ***tradeoffs among multiple objectives***. *Allied Erecting and Dismantling Co. v. Genesis Attachments, LLC*, 825 F.3d 1373, 1381 (Fed. Cir. 2016) ('A given course of action often has simultaneous advantages and disadvantages, and this does not necessarily obviate motivation to combine.')."

Corephotonics, Ltd. v. Apple Inc., No. 2020-1961, 2021 WL 4944471, at *6 (Fed. Cir. Oct. 25, 2021)
(cited at IPR2023-01236, Paper 27 (Petitioner's Reply) at 12-13)

Patent Owner's Unsuitability Arguments

Indeed, the drawbacks of the brass inlet or AFLAS seal outweigh whatever (unidentified) benefits there are.[1] Brass can lead to fuel degradation and promote formation of gels and deposits that can plug lines, orifices, filter screens, and the like, causing injector malfunction or seizures. POR at 20. Thus, the brass inlet in Coxreels risks malfunction of downstream equipment. Even Dr. Durham acknowledges that such equipment is in the "red zone" and operates at high pressure and temperature, that safety is a "chief concern" on a well site, and that safety incidents can result in life-threatening injuries. Ex. 2047 at 20:17-23; 66:13-67:25. ("A red zone's an area around the high pressure pumping equipment and well heads, frac iron, things that contain high pressure" and "close proximity to the engines, the temperatures can be higher than the ambient temperature...[b]ecause the engines release heat."). A POSITA would therefore conclude that use of brass in a refueling system risks serious malfunctions and possible injury. In view of such serious

IPR2023-01236, Paper 30 (PO Sur-Reply) at 11

"'[T]he fact that the motivating benefit comes at the expense of another benefit... should not nullify its use as a basis to modify the disclosure of one reference with the teachings of another.' But ...'[t]he benefits, *both lost and gained,* ***should be weighed*** against one another.'"

Henny Penny Corp. v. Frymaster LLC, 938 F.3d 1324, 1332 (Fed. Cir. 2019) (citing *Winner Int'l Royalty Corp. v. Wang*, 202 F.3d 1340 (Fed. Cir. 2000)) (cited by Patent Owner in Sur-Reply)

Patent Owner's Unsuitability Arguments

PO Assumptions about *Van Vliet* system	Evidence?
Extreme cold operating temperatures (for nickel / AFLAS seal version)	**No evidence that this occurs inside trailer, and rebutted by Dr. Durham** *See* IPR2023-01236 & 01237, EX1055 at ¶¶ 15-18
Long term fuel storage or high temperatures or "severe duty" (for brass version)	**No evidence that this occurs** *See* IPR2023-01236 & 01237, EX1055 (Supp. Durham Declaration) at ¶ 11
Only 3 hoses operating simultaneously	**Contrary to prior art** *See* IPR2023-01236 & 01237, EX1055 at ¶¶ 27-34; EX1004 (*Van Vliet*) at Fig 1 (shows 10 hoses)
Hose length of 700 ft	**Contrary to prior art** *See* IPR2023-01236 & 01237, EX1055 at ¶ 25; EX1048 (*AFD*) at 3 (hoses 300-450 ft long)
Minimum fuel volumes of 7500 gal / 12 hr	**Rebutted by Dr. Durham** *See* IPR2023-01236 & 01237, EX1055 at ¶ 41
Maximum pumping pressure of 60 psi	**Rebutted by Dr. Durham** *See* IPR2023-01236 & 01237, EX1055 at ¶ 34
Use of diesel (as opposed to other fuels)	**Not required** *See* IPR2023-01236 & 01237, EX1055 at ¶ 13

Dr. Durham: Using a Specific Reel from *Coxreels* Would Be Suitable

Flow Calculations
5/28/2024

Assumptions:
1. Turbulent flow regime
2. Fluid properties

Fluid: diesel at 60 deg F	specific gravity		0.88
	dyn viscosity	ft^2/s	4.31E-06
total flow rate, gpm			21.5
max duty cycle			50%
total fuel per 12 hrs		gal	7700
Number of hoses			5
hose flow rate, gpm			4.3

	Part	ID , in.	Length (ft)	dP (psi)	total P (psi)
B_1	filter	2.00		6.72	
	manifold to hose	1.00	6.00	0.05	
	elbow	0.50		0.44	
	hose	0.75	200	6.85	14.06
B_2	filter	2.00		6.72	
	manifold to hose	1.00	6.00	0.05	
	elbow	0.50		0.44	
	hose	0.75	300	10.28	17.49
B_3	filter	2.00		6.72	
	manifold to hose	1.00	6.00	0.05	
	elbow	0.50		0.44	
	hose	0.75	450	15.42	22.63
B_4	filter	2.00		6.72	
	manifold to hose	1.00	6.00	0.05	
	elbow	0.50		0.44	
	hose	0.50	200	46.95	54.16

Pressures < pressure limit of hose (90-150 psi)
< Rodgers' operating pressure limit (60 psi)

IPR2023-01236, EX1058

'118 Patent: Disputed Issues

A. A POSITA would have been motivated to combine Van Vliet and Coxreels
- Grounds 1A and 2A

B. **A POSITA would have been motivated to [1] combine Van Vliet and Shoap, and [2] modify *Shoap* to include separate tube and sleeve**
- **Ground 2, 2A, and 3**

C. The combination of Van Vliet and Shoap discloses Claim 7
- Ground 2 and 2A

***See also* IPR2023-10236, Paper 27 (Reply) at 18-19**

Overview of *Shoap*

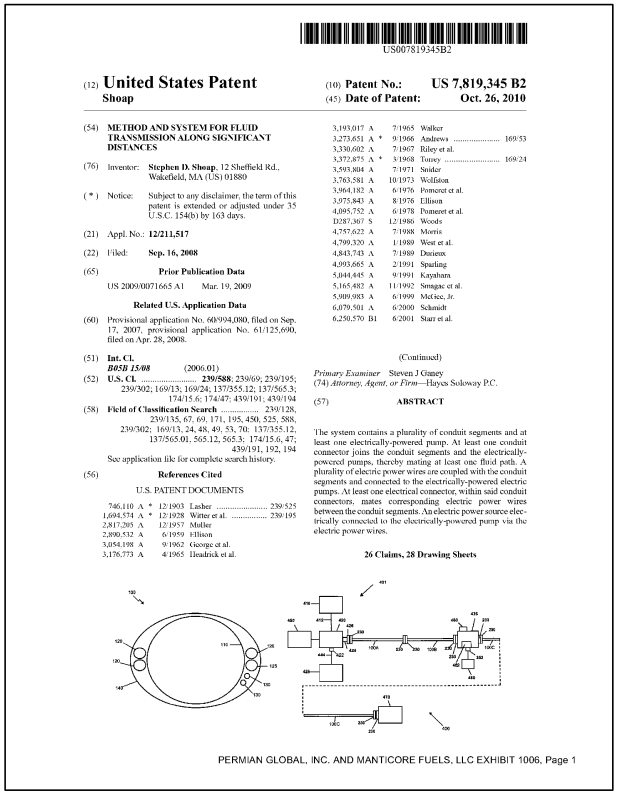

US007819345B2

(12) **United States Patent**
Shoap

(10) **Patent No.: US 7,819,345 B2**
(45) **Date of Patent: Oct. 26, 2010**

(54) **METHOD AND SYSTEM FOR FLUID TRANSMISSION ALONG SIGNIFICANT DISTANCES**

(76) Inventor: **Stephen D. Shoap**, 12 Sheffield Rd., Wakefield, MA (US) 01880

(*) Notice: Subject to any disclaimer, the term of this patent is extended or adjusted under 35 U.S.C. 154(b) by 163 days.

(21) Appl. No.: **12/211,517**

(22) Filed: **Sep. 16, 2008**

(65) **Prior Publication Data**

US 2009/0071665 A1 Mar. 19, 2009

Related U.S. Application Data

(60) Provisional application No. 60/904,080, filed on Sep. 17, 2007, provisional application No. 61/125,690, filed on Apr. 28, 2008.

(51) **Int. Cl.**
B05B 15/08 (2006.01)

(52) **U.S. Cl.** **239/588**; 239/69; 239/195; 239/302; 169/13; 169/24; 137/355.12; 137/565.3; 174/15.6; 174/47; 439/191; 439/194

(58) **Field of Classification Search** 239/128, 239/135, 67, 69, 171, 195, 450, 525, 588, 239/302; 169/13, 24, 48, 49, 53, 70. 137/355.12, 137/565.01, 565.12, 565.3; 174/15.6, 47; 439/191, 192, 194

See application file for complete search history.

(56) **References Cited**

U.S. PATENT DOCUMENTS

746,110	A *	12/1903	Lasher	239/525
1,694,574	A *	12/1928	Witter et al.	239/195
2,817,205	A	12/1957	Muller	
2,890,532	A	6/1959	Ellison	
3,054,198	A	9/1962	George et al.	
3,176,773	A	4/1965	Headrick et al.	
3,193,017	A	7/1965	Walker	
3,273,651	A *	9/1966	Andrews	169/53
3,330,602	A	7/1967	Riley et al.	
3,372,875	A *	3/1968	Toney	169/24
3,593,804	A	7/1971	Snider	
3,763,581	A	10/1973	Wolfston	
3,964,182	A	6/1976	Pomeret et al.	
3,975,843	A	8/1976	Ellison	
4,095,752	A	6/1978	Pomeret et al.	
D287,367	S	12/1986	Woods	
4,757,622	A	7/1988	Morris	
4,799,320	A	1/1989	West et al.	
4,843,743	A	7/1989	Durieux	
4,993,665	A	2/1991	Sparling	
5,044,445	A	9/1991	Kanphara	
5,165,482	A	11/1992	Smagac et al.	
5,909,983	A	6/1999	McGee, Jr.	
6,079,501	A	6/2000	Schmidt	
6,250,570	B1	6/2001	Starr et al.	

(Continued)

Primary Examiner Steven J Ganey
(74) *Attorney, Agent, or Firm*—Hayes Soloway P.C.

(57) **ABSTRACT**

The system contains a plurality of conduit segments and at least one electrically-powered pump. At least one conduit connector joins the conduit segments and the electrically-powered pumps, thereby mating at least one fluid path. A plurality of electric power wires are coupled with the conduit segments and connected to the electrically-powered electric pumps. At least one electrical connector, within said conduit connectors, mates corresponding electric power wires between the conduit segments. An electric power source electrically connected to the electrically-powered pump via the electric power wires.

26 Claims, 28 Drawing Sheets

PERMIAN GLOBAL, INC. AND MANTICORE FUELS, LLC EXHIBIT 1006, Page 1

IPR2023-01236, EX1006 (Shoap) at Cover

(57) **ABSTRACT**

The system contains a plurality of conduit segments and at least one electrically-powered pump. At least one conduit connector joins the conduit segments and the electrically-powered pumps, thereby mating at least one fluid path. A plurality of electric power wires are coupled with the conduit segments and connected to the electrically-powered electric pumps. At least one electrical connector, within said conduit connectors, mates corresponding electric power wires between the conduit segments. An electric power source electrically connected to the electrically-powered pump via the electric power wires.

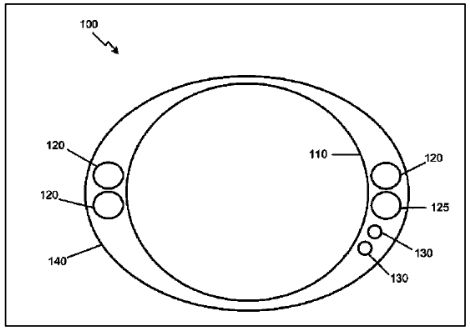

Motivation to Combine *Van Vliet* and *Shoap*: *Haile*

(12) **United States Patent**
Haile et al.

(10) **Patent No.: US 10,882,732 B2**
(45) **Date of Patent: Jan. 5, 2021**

(54) **SYSTEM AND METHOD FOR AUTOMATIC FUELING OF HYDRAULIC FRACTURING AND OTHER OILFIELD EQUIPMENT**

(71) Applicants: **Luke Haile**, Fort Worth, TX (US); **Daniel Thomas Haile**, Archer City, TX (US)

(72) Inventors: **Luke Haile**, Fort Worth, TX (US); **Daniel Thomas Haile**, Archer City, TX (US)

(73) Assignee: **American Energy Innovations, LLC**, Springtown, TX (US)

(52) **U.S. Cl.**
CPC ***B67D 7/0401*** (2013.01); ***B67D 7/145*** (2013.01); ***B67D 7/16*** (2013.01); ***B67D 7/303*** (2013.01);
(Continued)

(58) **Field of Classification Search**
CPC B67D 7/04; B67D 7/0401; B67D 7/145; B67D 7/16; B67D 7/3209; B67D 7/40;
(Continued)

(56) **References Cited**

U.S. PATENT DOCUMENTS

2,176,635 A 10/1938 Mattson

(21) Appl. No.: **16/094,810**

(22) PCT Filed: **Apr. 24, 2017**

(86) PCT No.: **PCT/US2017/029173**

§ 371 (c)(1),
(2) Date: **Oct. 18, 2018**

(87) PCT Pub. No.: **WO2017/185094**

PCT Pub. Date: **Oct. 26, 2017**

(65) **Prior Publication Data**

US 2019/0119096 A1 Apr. 25, 2019

Related U.S. Application Data

(63) Continuation-in-part of application No. 15/135,761, filed on Apr. 22, 2016, now Pat. No. 10,759,649.

Referring now also to FIG. **20** in the drawings, an alternative embodiment of a mobile fueling platform for automatically providing fuel to a saddle tank of the frac equipment according to the present application is illustrated. System **1001** is comprised of a fuel transport **1003** and a fuel cart **1005**. Fuel transport **1003** is fluidly and electrically connected to fuel cart **1005** with hose **1007**. Fuel flows from the tank of the fuel transport through the fuel station of the fuel transport through the hose **1007** and into the fuel cart **1005** to be supplied to a saddle tank of a frac pump. The controller of the fuel transport is wired through the hose to an electric valve of the fuel station of the fuel transport and can stop the flow of fuel from reaching the fuel cart. Fuel transport **1003** typically has a capacity of nine thousand five hundred gallons ±two thousand gallons but due to transportation issues is typically filled to seven thousand five hundred gallons.

IPR2023-01236, EX1029 (Haile) at Cover (left); 10:18-34 (right); *see* Paper 3 (Petition) at 44-45

Patent Owner Sur-Reply: *Haile* is not prior art

1

Patent Owner waived this argument in the POR:

"Patent Owner ***also does not renew its pre-institution argument*** that Liu does not teach blocks of prediction-error pixels. . . . Patent Owner has ***thus waived*** this argument. See NuVasive, 842 F.3d at 1380–81 (Fed. Cir. 2016) (holding that the patent owner waived arguments on an issue that were not raised in its response after institution)."

Google LLC v. Uniloc 2017 LLC, IPR2020-00447, Paper 24, 9–10 n. 6

2

***Haile* is still evidence of level of skill & reason to combine**

"***However, intervenor here is not attempting to prove a prior actual reduction to practice, but merely to submit evidence of the level of skill in the art at a time shortly after the invention was made.*** Although Parsons apparently did not, at a time reasonably contemporaneous with appellants' reduction to practice, recognize the advantage principally relied on by appellants, Parsons was, nevertheless, motivated by the prior art teachings to invent a method corresponding to the claimed invention. That Parsons chose to use PMSF to stabilize lyophilized tracers and standards does not detract from the weight to be accorded his work, because the claims are sufficiently broad to cover such use."

In re Farrenkopf, 713 F.2d 714, 720 (Fed. Cir. 1983)

Physically Separate Tube & Sleeve Would Have Been Obvious

Alternatively, to the extent that Claim 5 requires that the tube and the sleeve be physically separate structures, it would have been obvious to a POSITA that conduit having a similar cross-sectional structure as shown in FIG. 1A of *Shoap* could be formed using two thinner concentric conduits instead of a single thicker conduit having an inner surface and an outer surface with a thickness. That arrangement would be merely an obvious matter of design choice. EX1003, ¶183.

IPR2023-01236, Paper 3 (Petition) at 48-49

183. Alternatively, to the extent that *Shoap* discloses that the inner conduit surface **110** and outer conduit surface **140** shown in, for example, FIG 1A are both surfaces of a single structure (for example a "thick" rubber hose), and to the extent that Claim 5 requires that the tube and the sleeve be physically separate structures, it would be obvious to a POSITA that conduit having a similar cross-sectional structure as shown in Fig. 1A of *Shoap* could be formed using separate structures. For example, it would be obvious to a POSITA that inner conduit surface **110** would represent an inner "tube". It would further be obvious to a POSITA that outer conduit surface **140** would represent an outer "sleeve". Accordingly, it would have been obvious to a POSITA using 2 thinner concentric conduits instead of a single thicker conduit having an inner surface and an outer surface with a thickness. For example, as discussed in Section VIII.C above, the use of protective sleeves to surround tubes was well known at the time of the '118 Patent. Commercially available products, such as RhinoSleeve marketed by SRM Industries, were commercially available and easily accessible by a POSITA.

IPR2023-01236, EX1003 (Durham Declaration) at ¶ 183

'118 Patent: Disputed Issues

A. **A POSITA would have been motivated to combine Van Vliet and Coxreels**

- **Grounds 1A and 2A**

B. **A POSITA would have been motivated to [1] combine Van Vliet and Shoap, and [2] modify *Shoap* to include separate tube and sleeve**

- **Ground 2, 2A, and 3**

C. **The combination of Van Vliet and Shoap discloses Claim 7**

- **Ground 2 and 2A**

Patent Owner's Response Does Not Address Petition's Analysis

Petition

As explained with respect to Claim 6 above, and incorporated herein by reference, a POSITA would understand that any system having communication lines routed through the bodies of reels would require respective connectors for each communication line. *See supra* Section VIII.C.4; *see also* EX1003, ¶¶190-192. It would be an obvious design choice to mount those connectors on the reel on which the hose is connected and/or stored. EX1003, ¶192. Thus, *Van Vliet* in view of *Shoap* renders Claim 7 obvious.

IPR2023-01236, Paper 3 (Petition) at 49-50

PO response

Petitioner argues that it would have been an obvious design choice to mount connectors on the reel, relying on Ex. 1003, ¶192 in which Dr. Durham points to Shoap's slip-ring to conclude that claim 7 is obvious. However, a POSITA would have understood that Shoap's slip-ring would have been dangerous in Van Vliet. Ex. 2011 at ¶¶169-170. In particular, Shoap is directed to transporting water, such as through a hose. Ex. 1006, col. 1, ll. 24-33. Unlike fuel, water typically is not an ignition concern. Slip-rings like that of Shoap transfer electrical signals or power across a rotating shaft, from the rotating frame to the nonrotating frame. Petitioner and Dr. Durham did not consider use of Shoap's slip-ring in a fuel vapor environment, as would be present in Van Vliet. Ex. 2011 at ¶171. The way that Shoap's slip-ring works is that there are metal band contacts on a rotating shaft and brush contacts on the opposing nonrotating side such that the brushes drag across the bands as they rotate and maintain electrical continuity. As the brushes drag across

IPR2023-01236, Paper 15 (Patent Owner Response) at 31

Patent Owner's Sur-Reply Argument Is New and Should Be Ignored

V. GROUNDS 2 AND 2A SHOULD BE SEPARATELY DISMISSED AS TO CLAIM 7.

Moreover, "a reason for combining must exist." *Virtek Vision*, *supra*. Petitioner fails to explain any reason that would prompt a POSITA to mount connectors on the reels as claimed. The Petition only states that it would be design choice. Petition at 65. Neither the Petition nor Reply provide any reason that would prompt a POSITA to use a connector in Van Vliet and to do so in the claimed location. As this is not taught, Petitioner has obviously resorted to impermissible hindsight.

IPR2023-01236, Paper 30 (Sur-reply) at 20-21

Outline of Arguments

I. Overview of the Patents
II. Summary of the Grounds & Overview of Disputes
III. '805 Patent
IV. '118 Patent
V. '955 Patent

'955 Patent: Summary of the Grounds

Ground	Type	Summary
1	§§102/103	Claims 1 and 11-12 are anticipated and/or rendered obvious by *Van Vliet*
2	§103	Claims 1-5 and 11-12 are rendered obvious by *Van Vliet* in view of *Cable*
3	§103	Claims 6-10 and 14-20 are rendered obvious by *Van Vliet* in view of *LCR I* and/or *LCR II*
3A	§103	Claims 6-10 and 14-20 are rendered obvious by *Van Vliet* in view of *Cable* and *LCR I* and/or *LCR II*
4	§103	Claim 13 is rendered obvious by *Van Vliet* in view of *DeFosse*
4A	§103	Claim 13 is rendered obvious by *Van Vliet* in view of *Cable* and *DeFosse*

IPR2023-01238, Paper 3 (Petition) at 5-6

'955 Patent: Disputed Issues

A. A POSITA would have been motivated to combine Van Vliet and Cable
- **Grounds 2, 3A, and 4A**

B. A POSITA would have been motivated to combine Van Vliet and DeFosse
- **Ground 4 and 4A**

C. LCR I & II discloses or renders obvious a fluid register between pump and manifold
- **Ground 3 and 3A**

'955 Patent: Disputed Issues

A. A POSITA would have been motivated to combine Van Vliet and Cable

- **Grounds 2, 3A, and 4A**

B. A POSITA would have been motivated to combine Van Vliet and DeFosse

- **Ground 4 and 4A**

C. LCR I & II discloses or renders obvious a fluid register between pump and manifold

- **Ground 3 and 3A**

Petition: *Cable* teaches a reel that is "connected to be fed"

EX1005, 4:22-33. *Cable* describes that "[t]ube 46 is connected by a conventional reel rotatable coupling to hose 65." *Id.*, 4:33-36 & Fig. 5.

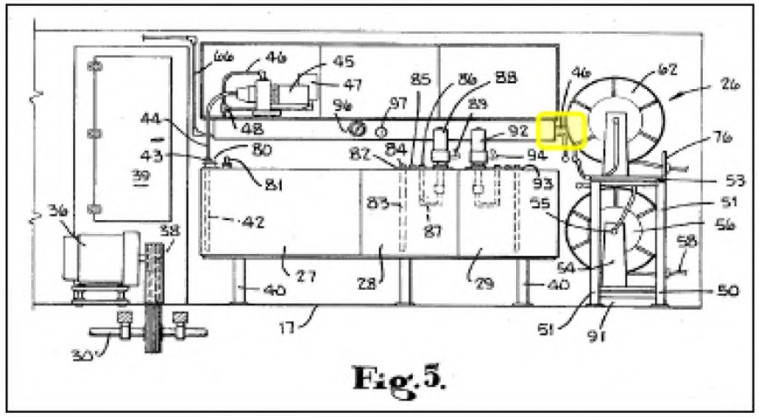

Fig. 5.

Fig. 5 (annotated: tube 46 highlighted in yellow). A POSITA would have understood that a conventional reel rotatable coupling (also known as a swivel joint) would be connected to a flow path in the reel to allow fluid to flow through the reels into the hose. EX1003, EX1003, ¶¶ 64-74; EX1016. Moreover, hose reels having fluid

IPR2023-01238, Paper 3 (Petition) at 38

Petition: Obvious to use well-known reel configuration / elements

A POSITA would have had a reasonable expectation of success in combining *Van Vliet* with *Cable*. *Id.* As explained above, *Van Vliet* and *Cable* describe similar systems for delivering fluid from a mobile trailer via hoses to multiple destinations. *Id.* Further, the elements incorporated into *Van Vliet* from *Cable* are either already present in *Van Vliet* (*e.g.*, reels) or were simple elements well-known in the art at the time of the '955 Patent. *Id.* Incorporating *Cable*'s aisle walkway and reel configuration into *Van Vliet*'s mobile fuel delivery system would merely involve combining prior art elements according to known methods to yield predictable results. *Id.*

IPR2023-01238, Paper 3 (Petition) at 37; *see also* EX1003 (Durham Declaration) at ¶ 175; Paper 11 (Institution Decision) at 14

Dr. Durham: Obvious to use well-known reel configuration / elements

13 Q. What reel configuration from Cable are
14 you incorporating into Van Vliet?
15 A. Well, there's several things. One, to
16 the extent that Van Vliet doesn't disclose a reel
17 with an internal fluid path, we get that from Cable.
18 We also have the reels arranged on two side walls or
19 at least adjacent two side walls with an aisle
20 between.

IPR2023-01238, EX2028 (Durham Deposition) at 107:13-17

Petition & Dr. Durham: Swivel Joints Were Commercially Available

Fig. 5 (annotated: tube 46 highlighted in yellow). A POSITA would have understood that a conventional reel rotatable coupling (also known as a swivel joint) would be connected to a flow path in the reel to allow fluid to flow through the reels into the hose. EX1003, EX1003, ¶¶ 64-74, EX1016. Moreover, hose reels having fluid connections for connecting a hose to a fluid source were commercially-available and well known to POSITAs before the '955 Patent's priority date. *Id.*, EX1015. It would have been an obvious design choice for a POSITA to implement these kinds of reels and connections to connect the hoses of *Van Vliet* to be fed by the manifolds, in view of *Van Vliet* alone and/or in combination with *Cable*. *Id.*, ¶¶ 178-79, 197.

Husky Fuel Swivel

Coxreels

IPR2023-01238, Paper 3 (Petition) at 38

Swivel Joints Were Commercially Available

EX1015, Coxreels

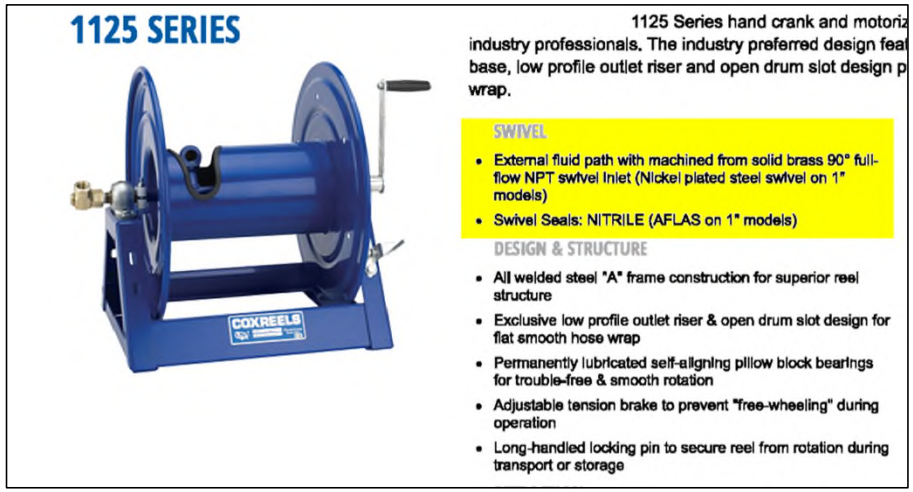

1125 SERIES

1125 Series hand crank and motoriz
industry professionals. The industry preferred design feat
base, low profile outlet riser and open drum slot design p
wrap.

SWIVEL

- External fluid path with machined from solid brass 90° full-flow NPT swivel inlet (Nickel plated steel swivel on 1" models)
- Swivel Seals: NITRILE (AFLAS on 1" models)

DESIGN & STRUCTURE

- All welded steel "A" frame construction for superior reel structure
- Exclusive low profile outlet riser & open drum slot design for flat smooth hose wrap
- Permanently lubricated self-aligning pillow block bearings for trouble-free & smooth rotation
- Adjustable tension brake to prevent "free-wheeling" during operation
- Long-handled locking pin to secure reel from rotation during transport or storage

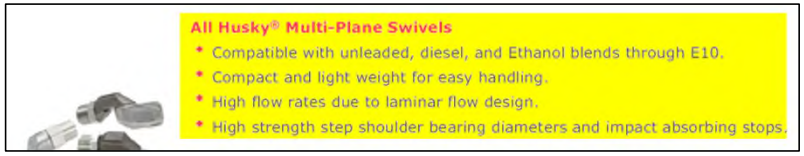

All Husky® Multi-Plane Swivels

- Compatible with unleaded, diesel, and Ethanol blends through E10.
- Compact and light weight for easy handling.
- High flow rates due to laminar flow design.
- High strength step shoulder bearing diameters and impact absorbing stops.

EX1016, Husky Fuel Swivel

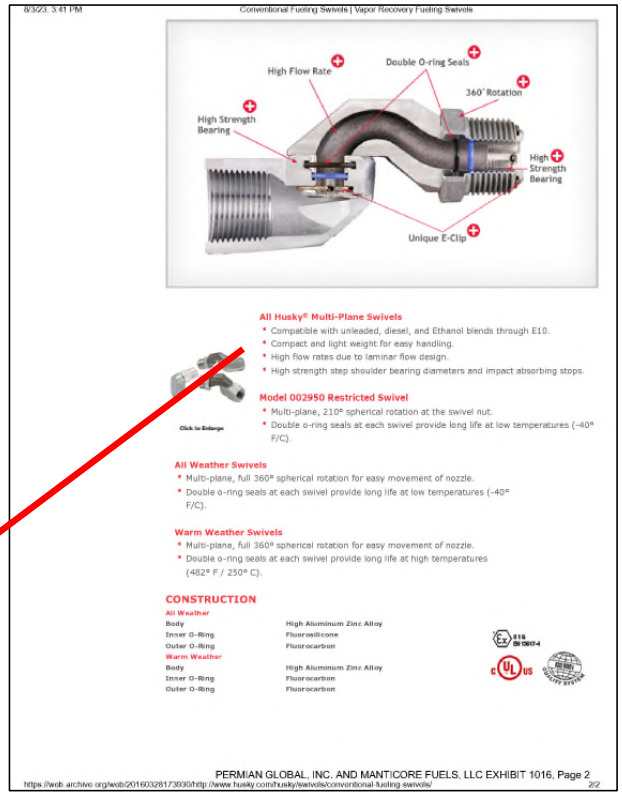

8/3/23, 3:41 PM Conventional Fueling Swivels | Vapor Recovery Fueling Swivels

High Flow Rate
Double O-ring Seals
360° Rotation
High Strength Bearing
High Strength Bearing
Unique E-Clip

All Husky® Multi-Plane Swivels

- Compatible with unleaded, diesel, and Ethanol blends through E10.
- Compact and light weight for easy handling.
- High flow rates due to laminar flow design.
- High strength step shoulder bearing diameters and impact absorbing stops.

Click to Enlarge

Model 002950 Restricted Swivel

- Multi-plane, 210° spherical rotation at the swivel nut.
- Double o-ring seals at each swivel provide long life at low temperatures (-40° F/C).

All Weather Swivels

- Multi-plane, full 360° spherical rotation for easy movement of nozzle.
- Double o-ring seals at each swivel provide long life at low temperatures (-40° F/C).

Warm Weather Swivels

- Multi-plane, full 360° spherical rotation for easy movement of nozzle.
- Double o-ring seals at each swivel provide long life at high temperatures (482° F / 250° C).

CONSTRUCTION

All Weather	
Body	High Aluminum Zinc Alloy
Inner O-Ring	Fluorosilicone
Outer O-Ring	Fluorocarbon
Warm Weather	
Body	High Aluminum Zinc Alloy
Inner O-Ring	Fluorocarbon
Outer O-Ring	Fluorocarbon

PERMIAN GLOBAL, INC. AND MANTICORE FUELS, LLC EXHIBIT 1016, Page 2

https://web.archive.org/web/20160328173930/http://www.husky.com/husky/swivels/conventional-fueling-swivels/ 2/2

PO's Response on Combining *Van Vliet* with *Cable*

VI. GROUND 2: THE CHALLENGED CLAIMS ARE NOT OBVIOUS OVER VAN VLIET IN VIEW OF CABLE 22

A. Petitioner fails to articulate a rationale or motivation for modifying Van Vliet with the reel of Cable. 22

1. The Coxreels 1125 Series reel is not for fracking or automated fuel delivery 24

2. A POSITA would have recognized that the Coxreels 1125 Series reel would have been unsuited for an automated fueling station as in Van Vliet. 25

3. The Coxreels 1125 Series reel would have resulted in an undesirable operating configuration 28

IPR2023-01236, Paper 15 (Patent Owner's Response) at i-ii

PO's Response on Combining *Van Vliet* with *Cable*

VI. GROUND 2: THE CHALLENGED CLAIMS ARE NOT OBVIOUS OVER VAN VLIET IN VIEW OF CABLE 22

. . .

B. A POSITA would not have looked to Cable to modify Van Vliet. 32

C. Cable is not informative of a practical arrangement for Van Vliet.....36

IPR2023-01238, Paper 15 (Patent Owner's response) at i-ii

'955 Patent: Disputed Issues

A. A POSITA would have been motivated to combine Van Vliet and Cable

- **Grounds 2, 3A, and 4A**

B. A POSITA would have been motivated to combine Van Vliet and DeFosse

- **Ground 4 and 4A**

C. LCR I & II discloses or renders obvious a fluid register between pump and manifold

- **Ground 3 and 3A**

Overview of *DeFosse*

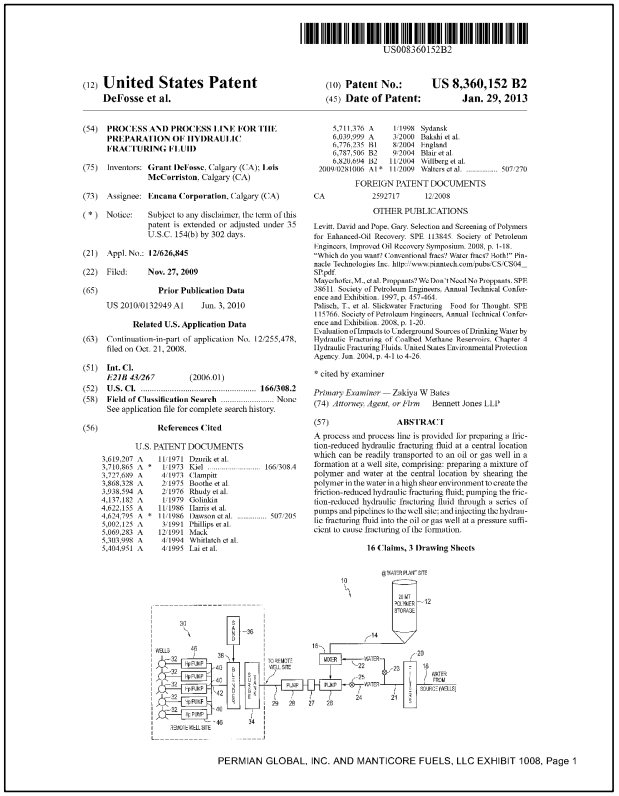

US008360152B2

(12) **United States Patent**
DeFosse et al.

(10) **Patent No.: US 8,360,152 B2**
(45) **Date of Patent: Jan. 29, 2013**

(54) **PROCESS AND PROCESS LINE FOR THE PREPARATION OF HYDRAULIC FRACTURING FLUID**

(75) Inventors: **Grant DeFosse**, Calgary (CA); **Lois McCorriston**, Calgary (CA)

(73) Assignee: **Encana Corporation**, Calgary (CA)

(*) Notice: Subject to any disclaimer, the term of this patent is extended or adjusted under 35 U.S.C. 154(b) by 302 days.

(21) Appl. No.: **12/626,845**

(22) Filed: **Nov. 27, 2009**

(65) **Prior Publication Data**

US 2010/0132949 A1 Jun. 3, 2010

Related U.S. Application Data

(63) Continuation-in-part of application No. 12/255,478, filed on Oct. 21, 2008.

(51) **Int. Cl.**
E21B 43/267 (2006.01)

(52) **U.S. Cl.** **166/308.2**

(58) **Field of Classification Search** ..... None
See application file for complete search history.

(56) **References Cited**

U.S. PATENT DOCUMENTS

3,619,207	A	11/1971	Dzurik et al.
3,710,865	A *	1/1973	Kiel 166/308.4
3,727,689	A	4/1973	Clampitt
3,868,338	A	2/1975	Beerbe et al.
3,938,594	A	2/1976	Rhudy et al.
4,137,182	A	1/1979	Golinkin
4,622,155	A	11/1986	Harris et al.
4,624,795	A *	11/1986	Dawson et al. 507/205
5,002,125	A	3/1991	Phillips et al.
5,069,283	A	12/1991	Mack
5,303,998	A	4/1994	Whitlatch et al.
5,404,951	A	4/1995	Lai et al.
5,711,376	A	1/1998	Sydansk
6,039,999	A	3/2000	Bakshi et al.
6,776,235	B1	8/2004	Englund
6,787,506	B2	9/2004	Blair et al.
6,820,694	B2	11/2004	Wellberg et al.
2009/0281006	A1 *	11/2009	Walters et al. 507/270

FOREIGN PATENT DOCUMENTS

CA 2592717 12/2008

OTHER PUBLICATIONS

Levitt, David and Pope, Gary. Selection and Screening of Polymers for Enhanced-Oil Recovery. SPE 113845. Society of Petroleum Engineers, Improved Oil Recovery Symposium. 2008, p. 1-18.
"Which do you want? Conventional frac? Water frac? Both!" Pinnacle Technologies Inc. http://www.pinntech.com/pubs/CS/CS04_SP.pdf
Mayerhofer, M., et al. Proppants? We Don't Need No Proppants. SPE 38611. Society of Petroleum Engineers. Annual Technical Conference and Exhibition. 1997, p. 457-464.
Palisch, T., et al. Slickwater Fracturing: Food for Thought. SPE 115766. Society of Petroleum Engineers, Annual Technical Conference and Exhibition. 2008, p. 1-20.
Evaluation of Impacts to Underground Sources of Drinking Water by Hydraulic Fracturing of Coalbed Methane Reservoirs. Chapter 4 Hydraulic Fracturing Fluids. United States Environmental Protection Agency. Jun. 2004, p. 4-1 to 4-26.

* cited by examiner

Primary Examiner — Zakiya W Bates
(74) *Attorney, Agent, or Firm* Bennett Jones LLP

(57) **ABSTRACT**

A process and process line is provided for preparing a friction-reduced hydraulic fracturing fluid at a central location which can be readily transported to an oil or gas well in a formation at a well site, comprising: preparing a mixture of polymer and water at the central location by shearing the polymer in the water in a high shear environment to create the friction-reduced hydraulic fracturing fluid; pumping the friction-reduced hydraulic fracturing fluid through a series of pumps and pipelines to the well site; and injecting the hydraulic fracturing fluid into the oil or gas well at a pressure sufficient to cause fracturing of the formation.

16 Claims, 3 Drawing Sheets

PERMIAN GLOBAL, INC. AND MANTICORE FUELS, LLC EXHIBIT 1008, Page 1

(57) **ABSTRACT**

A process and process line is provided for preparing a friction-reduced hydraulic fracturing fluid at a central location which can be readily transported to an oil or gas well in a formation at a well site, comprising: preparing a mixture of polymer and water at the central location by shearing the polymer in the water in a high shear environment to create the friction-reduced hydraulic fracturing fluid; pumping the friction-reduced hydraulic fracturing fluid through a series of pumps and pipelines to the well site; and injecting the hydraulic fracturing fluid into the oil or gas well at a pressure sufficient to cause fracturing of the formation.

IPR2023-01238, EX1008 (DeFosse) at Cover

DeFosse Discloses Using Pumps in Series

11. A distribution station comprising:
a container including first and second opposed side walls that join first and second opposed end walls;
at least one pump in the container;
at least one manifold in the container and fluidly connected with the at least one pump;
a plurality of reels in the container, each said reel individually connected with the at least one manifold;
a plurality of hoses, each said hose connected with a different one of the reels;
a plurality of valves in the container, each said valve situated between the at least one manifold and a respective different one of the reels;
a plurality of fluid level sensors, each said fluid level sensor connectable to an end of a different one of the hoses; and
a controller configured to individually open and close the valves responsive to the fluid level sensors.

13. The distribution station as recited in claim **12**, wherein the two pumps are arranged in fluid series.

preparing a fracturing fluid at a central location. EX1008, 1:10-13. *DeFosse* discloses a fracturing fluid preparation/blending system having two pumps (purple below) arranged in fluid series:

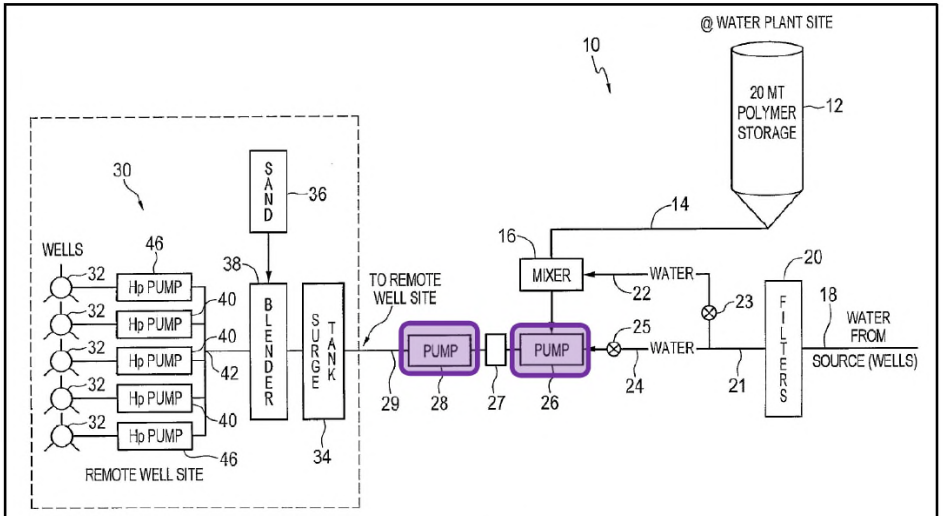

FIG. 1

IPR2023-01238, EX1001 ('955 Patent) at Claims 11, 13 (left); Paper 3 (Petition) at 20-21 (right)

A POSITA would have been motivated to combine *Van Vliet* and *DeFosse*

It would have been obvious to a POSITA to combine *DeFosse*'s teaching of pumps arranged in series with *Van Vliet*. EX1003, ¶ 251. *Van Vliet* discloses the use of pumps for pumping fluids. EX1004, [0003], & [0014]. *DeFosse* discloses pumps arranged in series for pumping fluids in a related context in fracturing operations. EX1008, Fig. 1. A POSITA designing a system of *Van Vliet* would have looked to existing pumping systems in the context of fracturing to allow the work of multiple pumps to be used cohesively. EX1003, ¶ 251. A POSITA would have been motivated to use two pumps in series in order to produce sufficient pumping capacity using two or more smaller pumps that would individually fall below the necessary pumping capacity and/or to take advantage of the fast startup and protection from cavitation that such a system would provide. *Id.*, ¶¶ 244-251.

IPR2023-01238, Paper 3 (Petition) at 58-59

A POSITA would have been motivated to combine *Van Vliet* and *DeFosse*

It would have been obvious to a POSITA to combine *DeFosse*'s teaching of pumps arranged in series with *Van Vliet*. EX1003, ¶ 251. *Van Vliet* discloses the use of pumps for pumping fluids. EX1004, [0003], & [0014]. *DeFosse* discloses pumps arranged in series for pumping fluids in a related context in fracturing operations. EX1008, Fig. 1. A POSITA designing a system of *Van Vliet* would have looked to existing pumping systems in the context of fracturing to allow the work of multiple pumps to be used cohesively. EX1003, ¶ 251. A POSITA would have been motivated to use two pumps in series in order to produce sufficient pumping capacity using two or more smaller pumps that would individually fall below the necessary pumping capacity and/or to take advantage of the fast startup and protection from cavitation that such a system would provide. *Id.*, ¶¶ 244-251.

IPR2023-01238, Paper 3 (Petition) at 58-59

1. A series pumping system helps prevent cavitation of the pumps. *See* IPR2023-01238, EX1003 at ¶ 244.
2. Two-stage pumping allows discharge at increased pressures. *See* IPR2023-01238, EX1003 at ¶ 247.
3. The use of pumps in series allows each physical pump to be smaller, while still developing the pressures and flowrates necessary for the distribution station. *See* IPR2023-01238, EX1003 at ¶ 248.
4. The use of a multistage pumping system allows for faster response of the system as a whole. *See* IPR2023-01238, EX1003 at ¶ 249.