US 20180057348A1

(19) United States

(12) Patent Application Publication

LOWRIE

(10) Pub. No.: US 2018/0057348 A1

(43) Pub. Date: Mar. 1, 2018

(54) **REFUELING SYSTEM AND METHOD**

(71) Applicant: **AFD Petroleum Ltd.,**, Edmonton (CA)

(72) Inventor: **Shayne LOWRIE**, Edmonton (CA)

(73) Assignee: **AFD Petroleum Ltd.,**, Edmonton (CA)

(21) Appl. No.: **15/684,781**

(22) Filed: **Aug. 23, 2017**

Related U.S. Application Data

(60) Provisional application No. 62/378,394, filed on Aug. 23, 2016.

Publication Classification

(51) **Int. Cl.**

B67D 7/36	(2006.01)
B67D 7/04	(2006.01)
B67D 7/30	(2006.01)
B67D 7/32	(2006.01)

(52) **U.S. Cl.**

CPC ***B67D 7/365*** (2013.01); ***B67D 7/04*** (2013.01); *B67D 7/16* (2013.01); ***B67D 7/3218*** (2013.01); ***B67D 7/301*** (2013.01)

(57) **ABSTRACT**

There is disclosed a refueling system and method for simultaneously refueling the fuel tanks of multiple pieces of machinery in the field. In an embodiment, the system comprises a mobile tanker with at least one fuel supply tank configured to connect and supply a plurality of refueling hoses. Each refueling hose has an upstream end connected to a supply line from the at least one fuel supply tank. At a downstream end, each refueling hose terminates at a mechanical open-close valve which is adapted to be inserted within each receiving fuel tank being refueled. The mechanical open-close valve is suitably shaped and sized to provide a clearance fit within the neck diameter of each receiving fuel tank being refueled, and has a buoyant body for mechanically actuating the mechanical open-close valve.

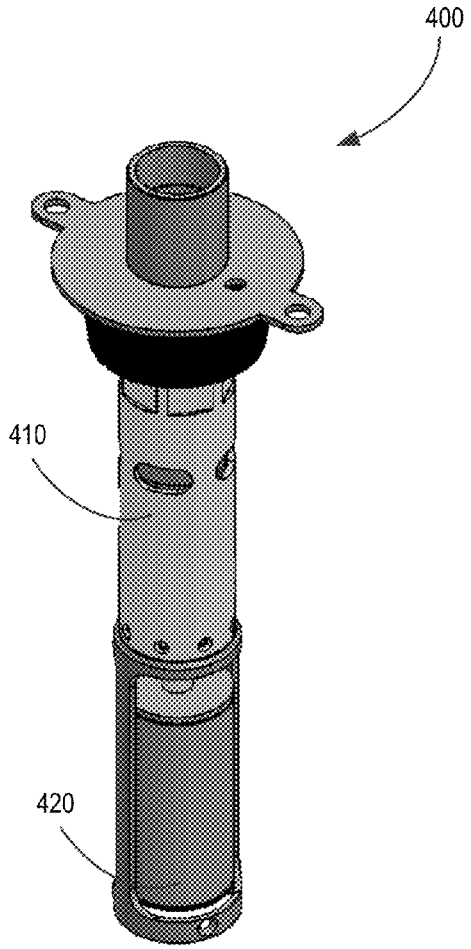

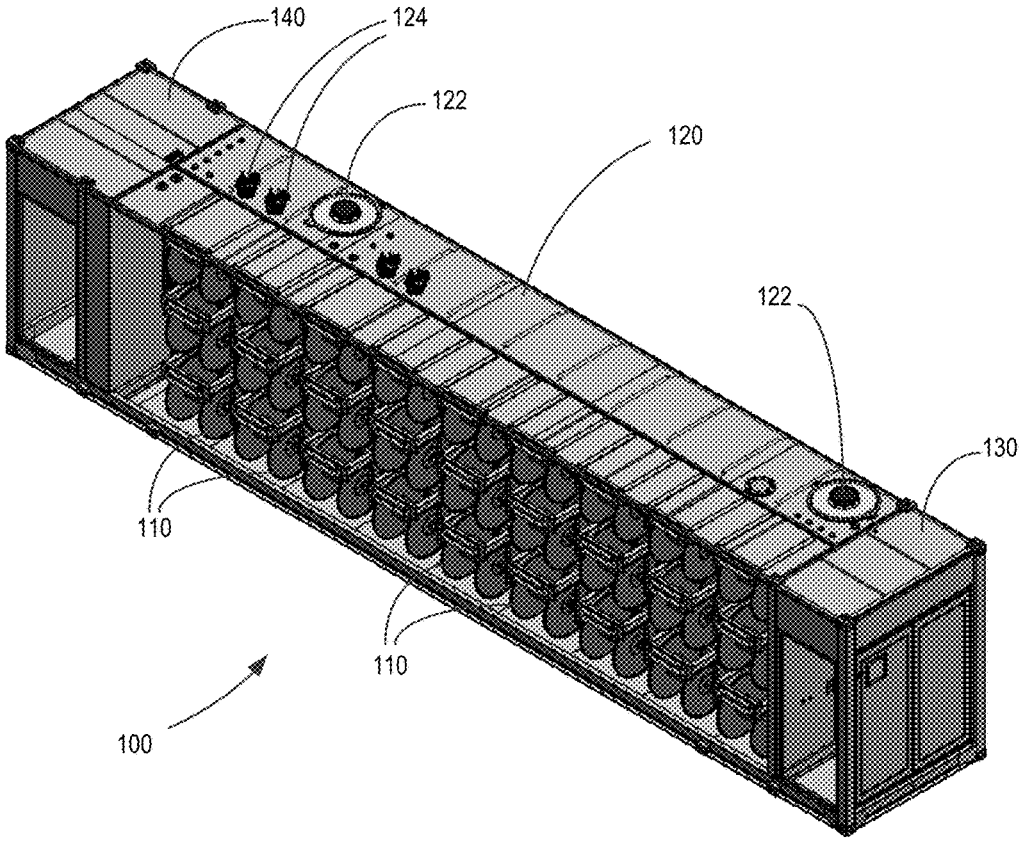

FIG. 1

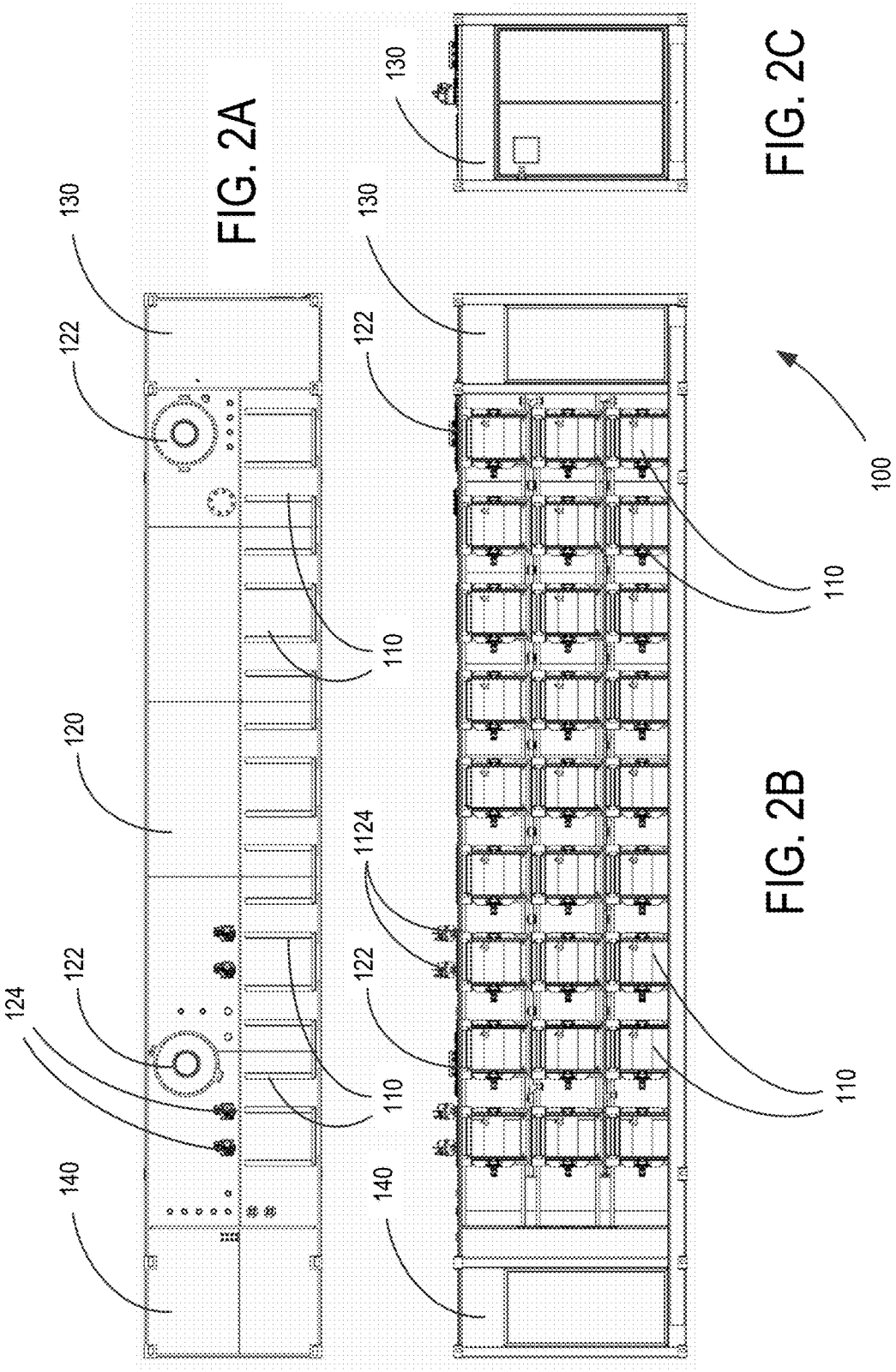

FIG. 2A

FIG. 2B

FIG. 2C

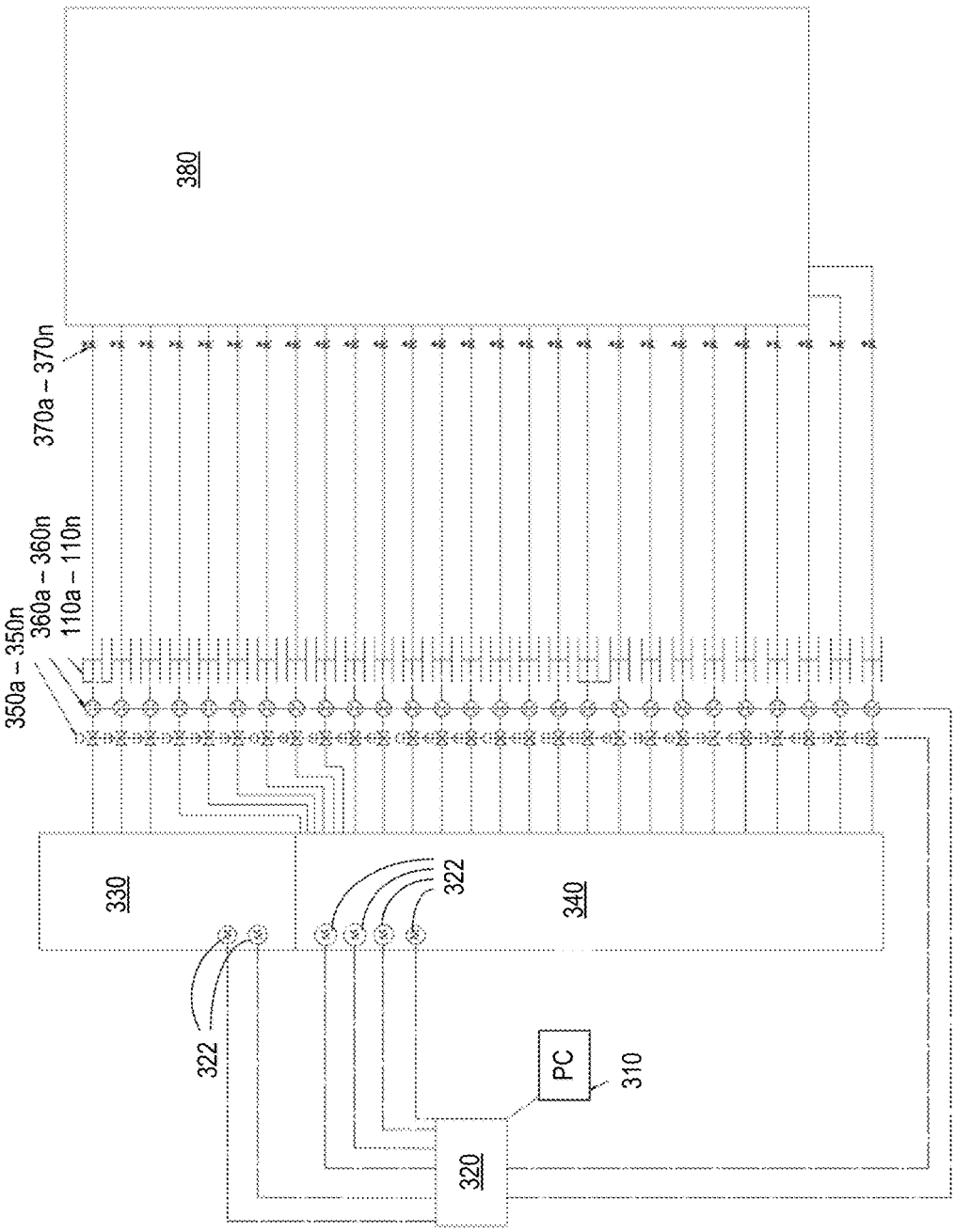
380
370a – 370n
360a – 360n
110a – 110n
350a – 350n
330
322
340
322
PC
310
320

FIG. 3

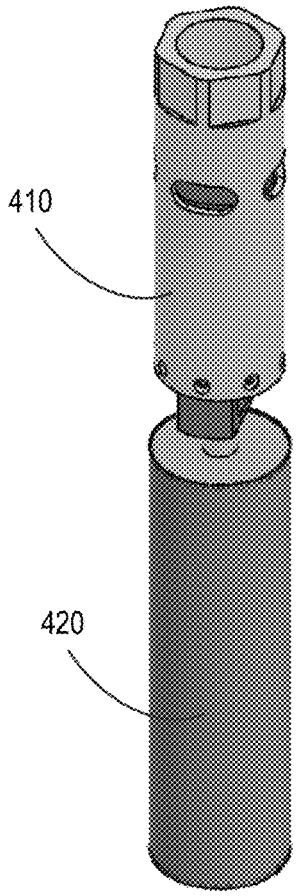

FIG. 4A

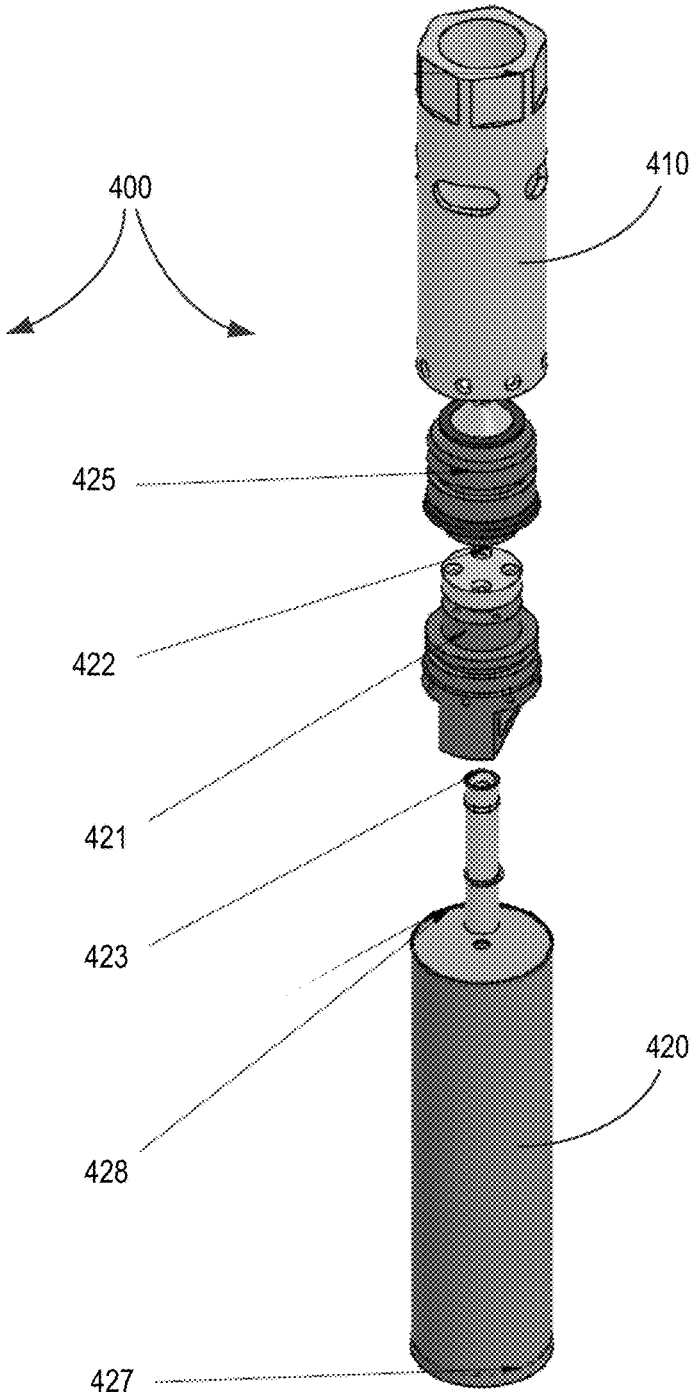

FIG. 4B

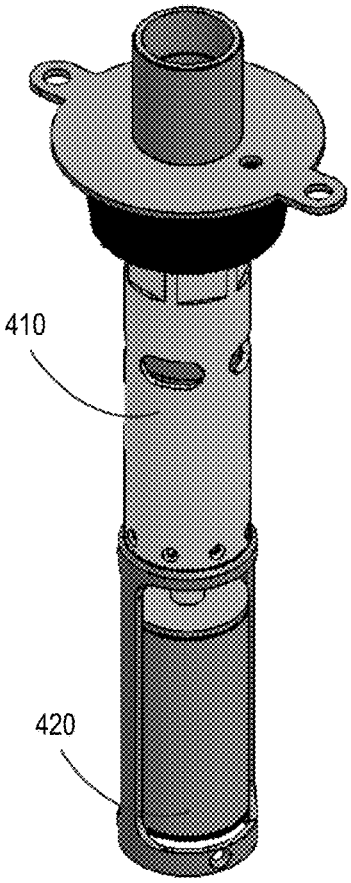

FIG. 4C

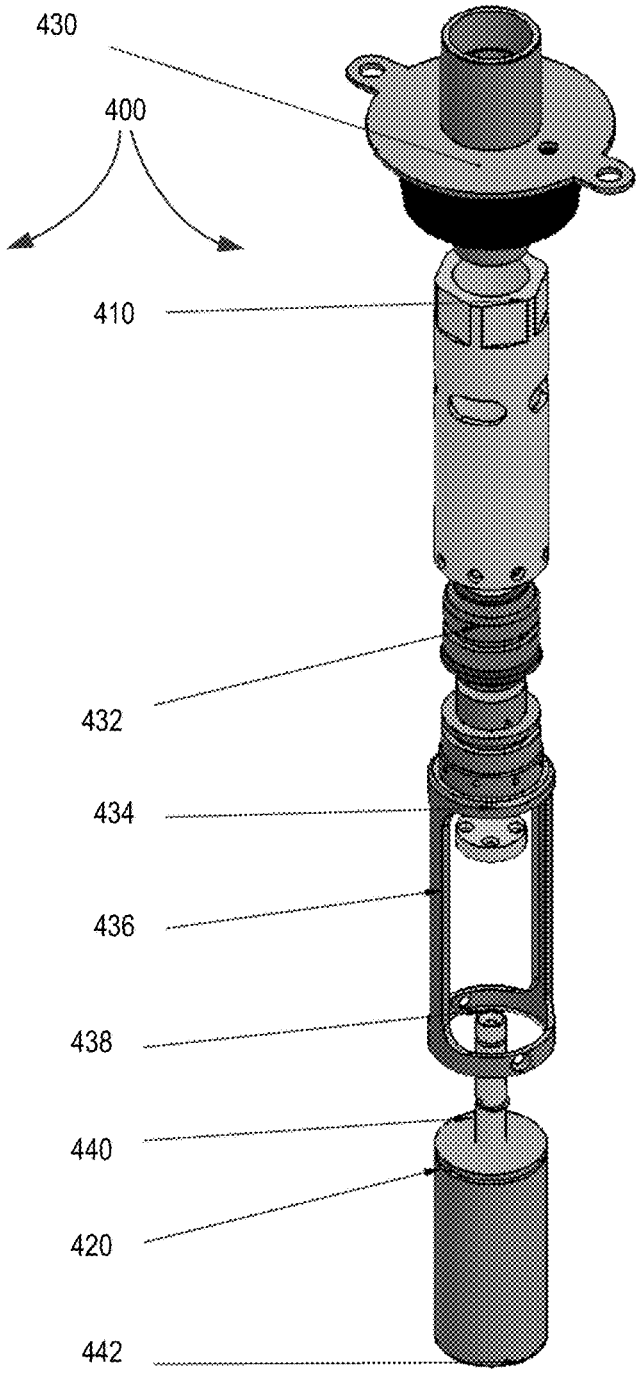

FIG. 4D

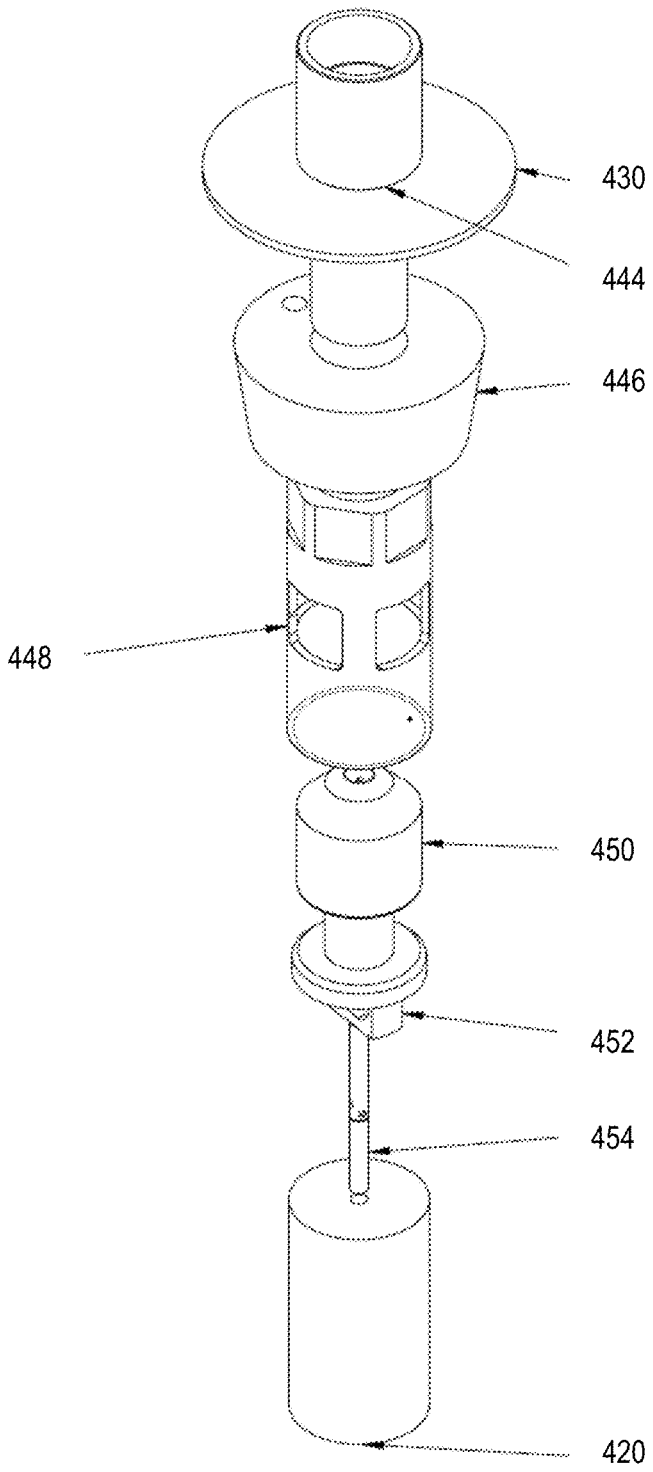

FIG. 4E

FIG. 4G

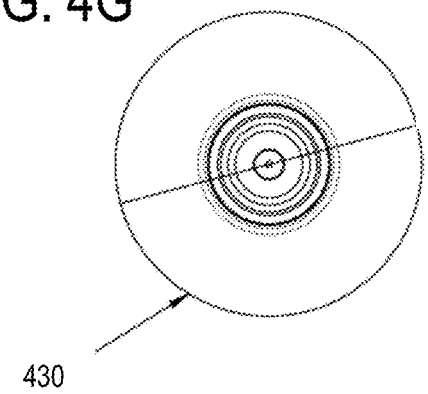

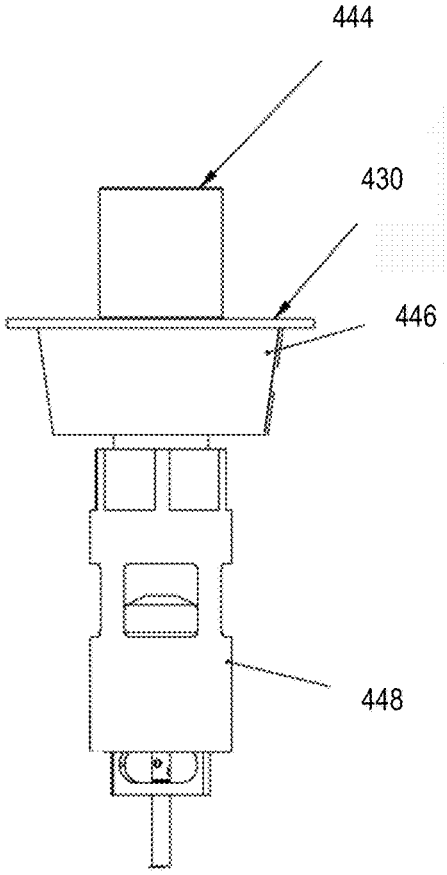

FIG. 4H

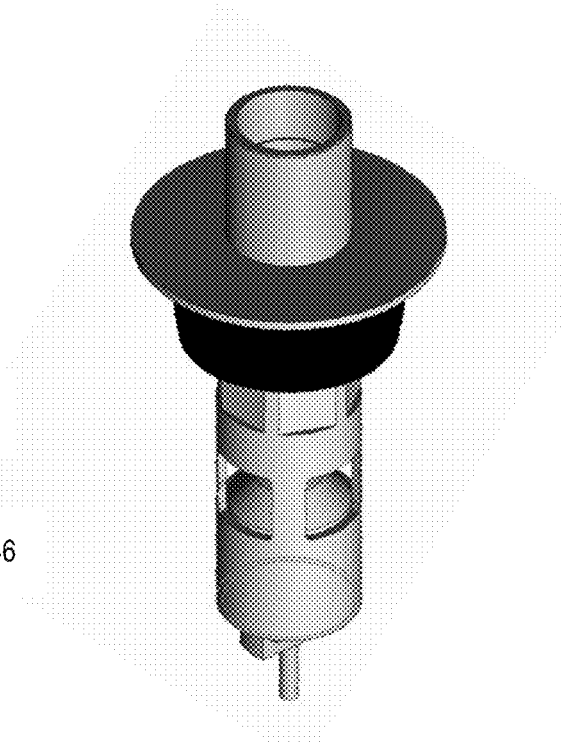

FIG. 4F

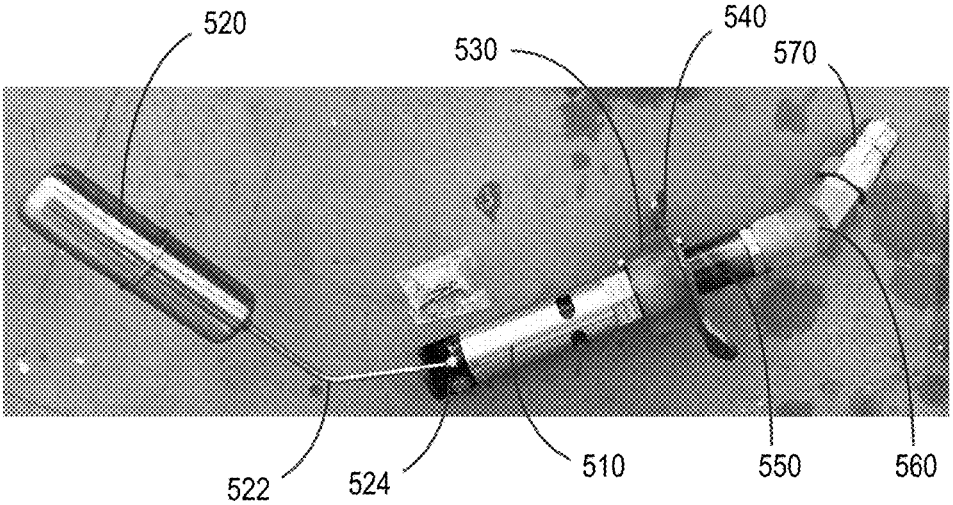
520
530
540
570
522
524
510
550
560

FIG. 5A

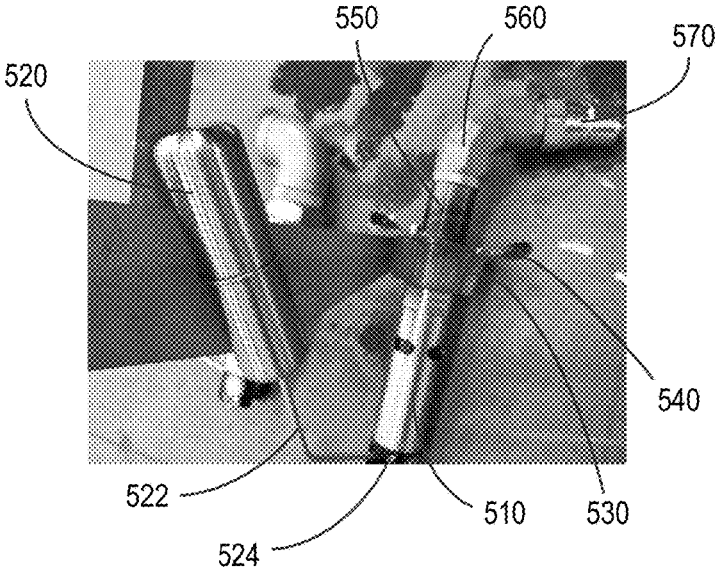
550
560
570
520
540
522
524
510
530

FIG. 5B

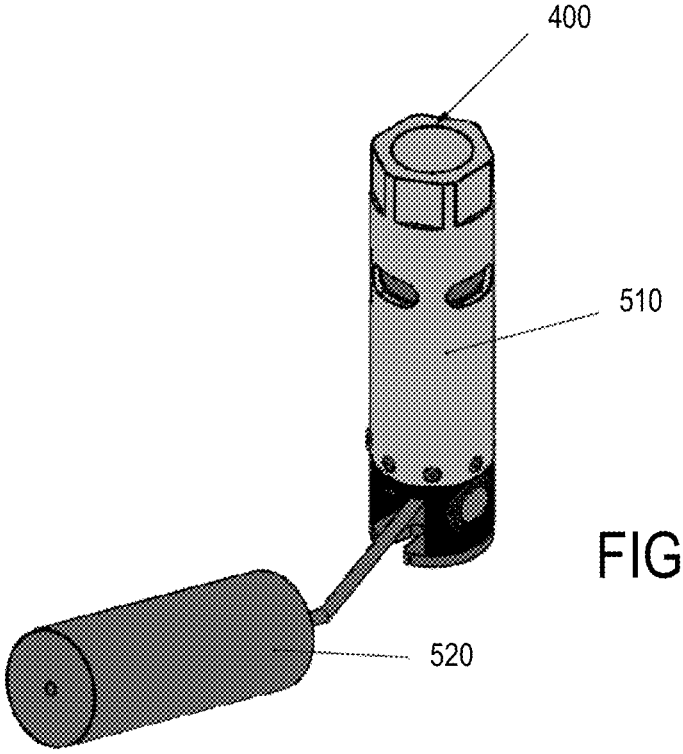

FIG. 5C

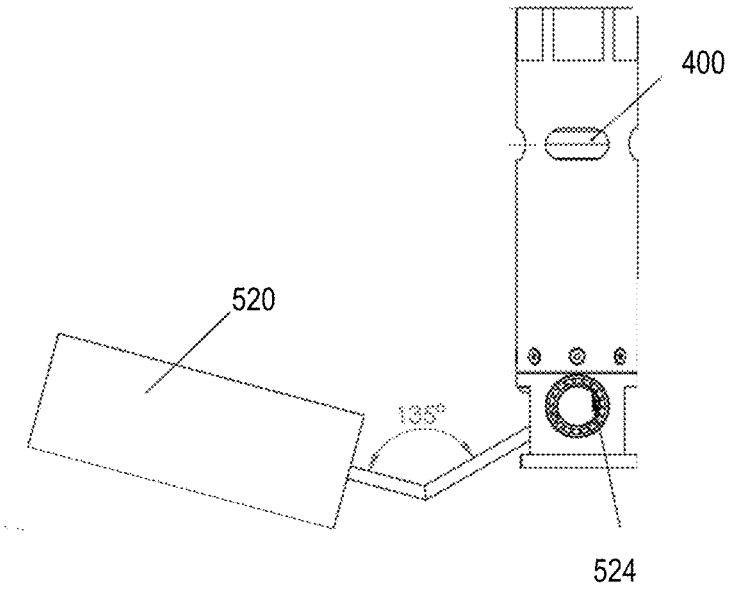

FIG. 5D

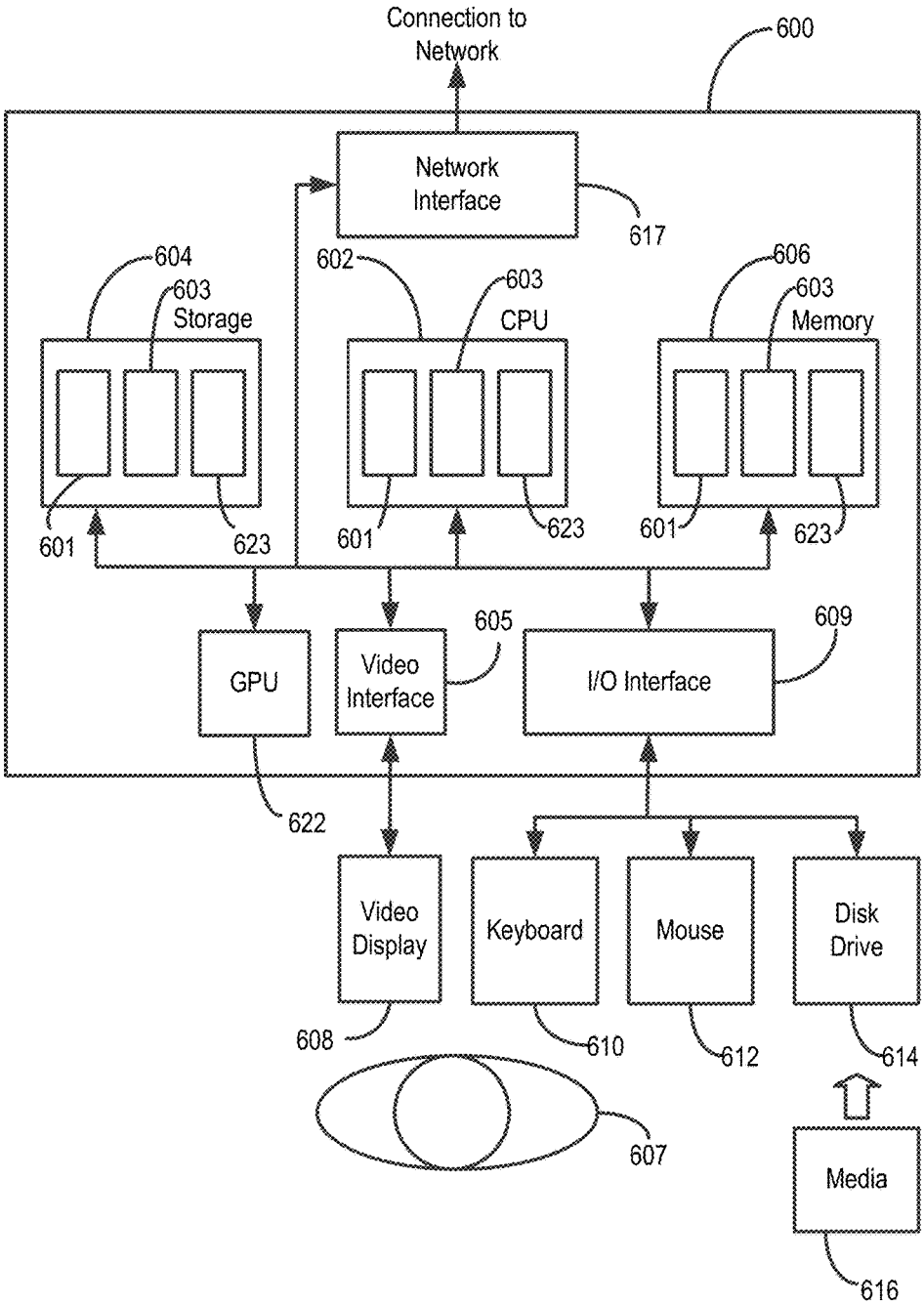
Connection to Network
600
Network Interface
617
604
603
Storage
602
603
CPU
606
603
Memory
601
623
601
623
601
623
GPU
Video Interface
605
I/O Interface
609
622
Video Display
Keyboard
Mouse
Disk Drive
608
610
612
614
607
Media
616

FIG. 6

REFUELING SYSTEM AND METHOD

RELATED CASES

[0001] This application claims the benefit of U.S. Provisional Application No. 62/378,394 filed on 23 Aug. 2016, the contents of which are incorporated herein by reference.

FIELD OF THE INVENTION

[0002] The present invention relates generally to refueling systems and methods.

BACKGROUND

[0003] Various types of machinery used at worksites need to be operated continuously over an extended period of time. Where the machinery is powered by a combustible engine with fuel supplied from a fuel tank with limited capacity, it may be necessary to refuel the machinery's fuel tank even during the machinery's continued operation in order to prevent the fuel tank from running empty. Where worksites have multiple pieces of machinery running simultaneously, multiple fuel tanks may require refueling at the same time.

[0004] While various refueling systems and methods have been proposed, these prior art systems and methods may have unnecessary complexity, and therefore unnecessary costs for hardware and implementation. What is therefore needed is an improved system and method for refueling machinery in the field which overcomes at least some of the limitations in the prior art.

SUMMARY

[0005] The present disclosure describes a refueling system and method for simultaneously refueling the fuel tanks of multiple pieces of machinery in the field.

[0006] In an embodiment, the system comprises a mobile tanker with at least one fuel supply tank configured to connect and supply a plurality of refueling hoses. Each refueling hose has an upstream end connected to a supply line from the at least one supply fuel tank. At a downstream end, each refueling hose is connected to a mechanical open-close valve which is adapted to be inserted and to operate within each receiving fuel tank being refueled. Thus, the mechanical open-close valve is suitably shaped and sized to pass through a neck diameter of each receiving fuel tank being refueled.

[0007] In an embodiment, the mechanical open-close valve includes a buoyant body which is buoyant in liquid fuel, and which floats at or near the top of the level of liquid fuel in each receiving fuel tank. As the buoyant body rises with the level of fuel in a receiving fuel tank being refueled, the buoyant body actuates a mechanical open-close valve housed in an upper body.

[0008] In one illustrative embodiment, the buoyant body is vertically aligned with the upper body housing the mechanical open-close valve, and is adapted to actuate the mechanical open-close valve utilizing a vertical plunger. In use, as the buoyant body rises with the level of liquid fuel within a receiving fuel tank, the vertical plunger actuates the mechanical open-close valve to a closed position. When the level of liquid fuel within a receiving fuel tank subsequently lowers as fuel is used, the buoyant body also lowers until the mechanical open-close valve is once again reopened.

[0009] In another illustrative embodiment, the buoyant body is attached to the end of an arm which is rotatably joined to an upper body at an elbow joint. As the buoyant body rises with the liquid fuel in the fuel tank, the buoyant body bends the arm at the elbow joint to form a smaller angle between the arm and the upper body. The buoyant body is thus adapted to rotate about the elbow joint and to actuate a mechanical open-close valve to a closed position to shut off the flow of fuel when the buoyant body reaches a predetermined rotated position relative to the upper body.

[0010] In another embodiment, the buoyant body is adjustable to actuate the mechanical open-close valve to a closed position as the floating member reaches a predetermined level in the receiving fuel tank. This predetermined level may be at any level selected by a user, including any level less than a full tank.

[0011] In another embodiment, the system further comprises a controller which is adapted to monitor a flow meter on each fuel line, and to detect when a mechanical open-close valve has been actuated to shut off the flow of fuel to a receiving fuel tank. Upon detection that the flow of fuel to a receiving fuel tank has stopped, the system engages a solenoid safety valve.

[0012] Periodically, the controller disengages the solenoid safety valve to attempt to refuel a receiving fuel tank. If the controller detects that the mechanical open-close valve continues to remain closed, the controller engages the solenoid safety valve once more, and waits for a predetermined time period before disengaging the solenoid safety valve and attempting to refuel the receiving fuel tank once again.

[0013] If, upon disengaging the solenoid safety valve, the controller detects that the mechanical open-close valve is once again open, the controller initiates a supply of fuel to the fuel line in order to begin refueling the receiving fuel tank.

[0014] In an embodiment, as a safety feature, the controller limits the amount of time that a supply of fuel can be provided to any fuel line supplying a receiving fuel tank. Thus, even if the mechanical open-close valve in a receiving fuel tank remains open, the flow of fuel may be periodically shut off by the system for a scheduled time out. This allows the controller to recheck the status of the fuel line after the scheduled time out, until the next cycle.

[0015] In another embodiment, the controller may be adapted to schedule the status check of the fuel lines in succession, such that the system attempts refueling of each line successively. However, the system is also capable of supplying all fuel lines at the same time if all lines happen to be open.

[0016] Other features and advantages of the present invention will become apparent from the following detailed description and accompanying drawings. It should be understood, however, that the detailed description and specific examples are given by way of illustration and not limitation.

[0017] Many modifications and changes within the scope of the present invention may be made without departing from the spirit thereof, and the invention includes all such modifications.

BRIEF DESCRIPTION OF THE DRAWINGS

[0018] FIG. **1** shows a perspective view of an illustrative system in accordance with an embodiment.

[0019] FIG. **2**A shows a top plan view of the illustrative system of FIG. **1**.

[0020] FIG. **2**B shows a front plan view of the illustrative system of FIG. **1**.

[0021] FIG. **2**C shows a right side view of the illustrative system of FIG. **1**.

[0022] FIG. **3** shows an illustrative schematic block diagram of a system in accordance with an embodiment.

[0023] FIGS. **4**A and **4**B show an illustrative mechanical open-close valve in accordance with an embodiment.

[0024] FIG. **4**C and FIG. **4**D shows another illustrative mechanical open-close valve in accordance with another embodiment.

[0025] FIG. **4**E shows another illustrative mechanical open-close valve in accordance with another embodiment.

[0026] FIG. **4**F shows a close-up perspective view of a portion of the valve assembly of FIGS. **4**C and **4**D.

[0027] FIGS. **4**G and **4**H show a top view and a front plan view of the valve assembly of FIG. **4**F.

[0028] FIGS. **5**A and **5**B show an illustrative mechanical open-close valve with a rotating arm in accordance with another embodiment.

[0029] FIG. **5**C shows a perspective view of an illustrative mechanical open-close valve with a rotating arm in accordance with another embodiment.

[0030] FIG. **5**D shows a plan view of the mechanical open-close valve of FIG. **5**C.

[0031] FIG. **6** shows a schematic block diagram of a generic computing device in accordance with an embodiment.

DETAILED DESCRIPTION

[0032] As noted above, the present disclosure describes a refueling system and method for simultaneously refueling the fuel tanks of multiple pieces of machinery in the field. Various illustrative embodiments will now be described with reference to the drawings.

[0033] First referring to FIG. **1**, shown is a perspective view of an illustrative system in accordance with an embodiment. Corresponding plan views are shown in FIGS. **2**A-**2**C. As shown in this illustrative example, the system comprises a mobile tanker **100** with at least one fuel supply tank **120** configured to connect and supply a plurality of refueling hoses **110**. The fuel supply tank **120** may be accessed via hatches or man holes **122** for servicing, and may be filled via filling valve connections **124** at a fuel depot, before the mobile tanker **100** is transported to a work site.

[0034] Still referring to FIG. **1**, and FIGS. **2**A-**2**C, in an embodiment, the system further includes enclosures or cabinets **130**, **140** at either end of the mobile tanker **100**, which cabinets **130**, **140** may enclose electrical power generators, batteries, and controllers (see controller **320** in FIG. **3**, as described below) for controlling various components of the mobile tanker **100**. The controllers are powered by the batteries which are periodically or continually recharged. Other electrical components in the system are also powered by the batteries, such as electrical solenoids for opening and closing safety valves, as described in more detail below. The cabinets **130**, **140** may be heated or cooled, and humidified or dehumidified to maintain suitable operating conditions for the modules housed therein.

[0035] Now referring to FIG. **3**, shown is a schematic block diagram of the system in accordance with an illustrative embodiment. As shown, the system includes a computer device **310** which, as shown in the block, may be a generic computer device (see computer device **600** in FIG. **6**). The computer device **310** may be accessed directly by an onsite operator, or may be adapted to wirelessly communicate with another remote computing device in order to be controlled remotely.

[0036] Still referring to FIG. **3**, the computer device **310** is operatively connected to a controller **320**, which is in turn connected to a plurality of fuel supply lines arranged in banks **330** and **340**. The controller **320** also controls a plurality of turbine pumps **322** for pumping fuel to the plurality of fuel supply lines.

[0037] In an embodiment, each fuel supply line is connected to a solenoid safety valve **350***a*-**350***n*, and then to a flow meter **360***a*-**360***n*, before connecting to an upstream end of a refueling hose **110**. Each refueling hose **110** may be wound on a reel for storage, and pulled out for dispensing fuel to a receiving fuel tank at a work site **380**.

[0038] In another embodiment, the system further comprises a controller which is adapted to monitor a flow meter **360***a*-**360***n* on each fuel line, and to detect when a mechanical open-close valve has been actuated to shut off the flow of fuel to a receiving fuel tank. Upon detection that the flow of fuel to a receiving fuel tank has stopped, the system engages a corresponding solenoid safety valve **350***a*-**350***n*.

[0039] In an embodiment, periodically, the controller **320** disengages an engaged solenoid safety valve **350***a*-**350***n* to attempt to refuel a corresponding receiving fuel tank. If the controller **320** detects that the mechanical open-close valve on a fuel line continues to remain closed, indicating that the fuel level remains sufficiently high, the controller **320** engages the solenoid safety valve **350***a*-**350***n* once more, and waits for a predetermined time period before disengaging the solenoid safety valve **350***a*-**350***n* once again, and attempting to refuel the corresponding receiving fuel tank.

[0040] If, upon disengaging the solenoid safety valve **350***a*-**350***n*, the controller **320** detects that the mechanical open-close valve is once again open, indicating that the level of fuel in the receiving fuel tank has been lowered through use, the controller **320** initiates a supply of fuel to the fuel line in order to begin refueling the receiving fuel tank.

[0041] In an embodiment, as a safety feature, the controller **320** limits the amount of time that a supply of fuel can be provided to any fuel line supplying a receiving fuel tank. Thus, even if the mechanical open-close valve in a particular receiving fuel tank remains open, the flow of fuel may be periodically shut off by the controller **320** for a scheduled time out. This allows the controller **320** to recheck the status of the fuel line after the scheduled time out, until the next cycle.

[0042] In another embodiment, the controller **320** may be adapted to schedule the status check of the fuel lines in succession, such that the system attempts refueling of each line successively. However, the system is also capable of supplying all fuel lines at the same time if all fuel lines happen to be open at any given time.

[0043] Still referring to FIG. **3**, a downstream end of each refueling hose **110** is connected to a mechanical open-close valve **370***a*-**370***n*. The mechanical open-close valve **370***a*-**370***n* is adapted to be inserted and to operate within each receiving fuel tank being refueled in the work site **380**. As will be described in further detail below, the mechanical open-close valve is suitably shaped and sized to pass through the neck diameter of each receiving fuel tank being refueled.

[0044] Now referring to FIGS. **4**A and **4**B, shown is an illustrative mechanical open-close valve **400** in accordance

with an embodiment. In this illustrative example, the mechanical open-close valve **400** includes a buoyant body **420** which is buoyant in liquid fuel due to a liquid and air tight lower end cap **427** and upper end cap **428**. The buoyant body **420** is adapted to float at or near the top of the level of liquid fuel in each receiving fuel tank. As the buoyant body **420** rises with the level of fuel in a receiving fuel tank being refueled due to its buoyancy, the buoyant body **420** actuates a mechanical open-close valve housed in an upper body **410** into a closed position. Conversely, as the buoyant body **420** lowers with the level of fuel in the receiving fuel tank as the fuel is used, the mechanical open-close valve is reopened.

[0045] With reference to FIG. **4**B, in an embodiment, the buoyant body **420** is vertically aligned with the upper body **410** housing the open-close valve, comprising a float plunger **425** adapted to open and close an aperture. An equalization body **421** having a piston stopper **422** is situated below the float plunger **425**, and above the buoyant body **420** which has an extending piston rod **423**. The piston rod **423** presses up against the equalization body **421** and actuates the mechanical open-close valve (i.e. the float plunger **425**) to close an aperture which allows fuel to flow through the upper body **410**. In other words, the mechanical open-close valve is adapted to be mechanically actuated by the buoyant body **420**, either into a closed position or an open position, as the buoyant body **420** responds to changing fuel levels within the receiving fuel tank.

[0046] Now referring to FIG. **4**C and FIG. **4**D, shown is an illustrative mechanical open-close valve in accordance with another embodiment. In FIG. **4**C, an upper body **410** is coupled to a buoyant body **420**. As shown in FIG. **4**D, a locator **430** near the top of the assembly positions the upper body **310** and buoyant body **420** within a fuel tank to be refueled. A float plunger **432** is shown below the upper body **410**, but is normally received within the upper body **410**, as shown in FIG. **4**C. Below the float plunger **432** is a piston stopper **434**, which normally abuts the upper body **410** as shown in FIG. **4**C.

[0047] Still referring to FIGS. **4**C and **4**D, a guard **436** receives and guards the buoyant body **420**, as illustrated in FIG. **4**C. Piston rod **438** couples the buoyant body **420** to the upper body **410**, while the guard **436** keeps the buoyant body **420** in position. A first float end cap **440** couples the piston rod **438** and seals a first end of the buoyant body **420**. A second float end cap **442** seals a second end of the buoyant body.

[0048] Now referring to FIG. **4**E, shown is another illustrative embodiment in which a swivel socket **444** on the locator **430** is adapted to receive a hose connector or joint in use. Locator float **446** is adapted to receive socket **444**. An upper body **448** is adapted to receive float stopper **450** and float end stopper **452**. A piston rod or shaft **454** is coupled to buoyant float **420**.

[0049] FIG. **4**F shows a close-up perspective view of an upper portion of the valve assembly of FIGS. **4**C and **4**D, with FIGS. **4**G and **4**H showing a corresponding top view and a corresponding front plan view, respectively, of the valve assembly of FIG. **4**F.

[0050] In each of the embodiments illustrated in FIG. **4**A, FIG. **4**B and FIG. **4**C, buoyant float **420** actuates the mechanical open-close valve to either start or stop the flow of fuel through the valve as the buoyant body **420** responds to changing fuel levels within the receiving fuel tank.

[0051] Now referring to FIGS. **5**A and **5**B, shown is another illustrative embodiment of a mechanical open-close valve **500**. In this embodiment, a buoyant body **520** is attached to the end of an arm **522** which is rotatably joined to an upper body **510** at an elbow joint **524**. As the buoyant body **520** rises with the level of liquid fuel in a receiving fuel tank, the buoyant body **520** bends the arm **522** at the elbow joint **524** to form a smaller angle between the arm **524** and the upper body **510**. The buoyant body **520** is thus adapted to rotate about the elbow joint **524** and to actuate a mechanical open-close valve housed in the upper body **510** to a closed position, in order to shut off the flow of fuel when the buoyant body **520** reaches a sufficiently high rotated position relative to the upper body **510**. This shut off point may be set at any suitable level selected by a user, including any fuel level less than a full tank.

[0052] Still referring to FIGS. **5**A and **5**B, in an embodiment, each mechanical open-close valve **500** is topped by a positioning member **530** and flanged tabs **540** adapted to extend across the neck opening of a receiving fuel tank. The tabs **540** may be provided with an aperture for hooking a bungee cord, or other means for securing the positioning member **530** in position. Immediately above the tabs **540** is a short column **550** connected via a corner joint **560** to another threaded column **570** for receiving a downstream end of a refueling hose **110** as described earlier.

[0053] FIG. **5**C shows a perspective view of an illustrative mechanical open-close valve with a rotating arm in accordance with another embodiment, and FIG. **5**D shows a corresponding plan view. In operation, the mechanical open-close valve is adapted to be mechanically actuated by the buoyant body **520**, either into a closed position or an open position, as the buoyant body **520** responds to changing fuel levels within the receiving fuel tank and reaches a sufficiently high or sufficiently low rotated position relative to the upper body **510**.

[0054] Now referring to FIG. **6**, a suitably configured generic computer device **600**, and associated communications networks, devices, software and firmware may provide a platform for enabling one or more embodiments as described above. By way of example, FIG. **6** shows a generic computer device **600** that may include a central processing unit ("CPU") **602** connected to a storage unit **604** and to a random access memory **606**. The CPU **602** may process an operating system **601**, application program **603**, and data **623**. The operating system **601**, application program **603**, and data **623** may be stored in storage unit **604** and loaded into memory **606**, as may be required. Computer device **600** may further include a graphics processing unit (GPU) **622** which is operatively connected to CPU **602** and to memory **606** to offload intensive image processing calculations from CPU **602** and run these calculations in parallel with CPU **602**. An operator **607** may interact with the computer device **600** using a video display **608** connected by a video interface **605**, and various input/output devices such as a keyboard **610**, mouse **612**, and disk drive or solid state drive **614** connected by an I/O interface **609**. In known manner, the mouse **612** may be configured to control movement of a cursor in the video display **608**, and to operate various graphical user interface (GUI) controls appearing in the video display **608** with a mouse button. The disk drive or solid state drive **614** may be configured to accept computer readable media **616**. The computer device **600** may form part of a network via a network interface **611**,

allowing the computer device **600** to communicate through wired or wireless communications with other suitably configured data processing systems (not shown).

[0055] As noted earlier, the generic computer device **600** may also be configured to communicate wirelessly with a remote computer device (not shown), such that the system may be controlled and operated remotely. It will be appreciated that the present description does not limit the size or form factor of the computing device on which the present system and method may be embodied.

[0056] With reference to FIG. **6**, and referring back to FIG. **3**, in an embodiment, the controller **320** controls is adapted to monitor the flow meters **360***a*-**360***n* on each fuel line, and to detect when a corresponding mechanical open-close valve **400**, **500** has been actuated to shut off the flow of fuel to a receiving fuel tank. Upon detection that the flow of fuel has stopped based on observing no flow through one or more of the flow meters **360***a*-**360***n*, the system engages a solenoid safety valve **350***a*-**350***n* to close the fuel line.

[0057] Periodically, the controller **320** reopens the solenoid safety valve to attempt to refuel. If the controller **320** detects that the mechanical open-close valve **400**, **500** continues to remain closed (i.e. no flow is observed through the corresponding flow meters **360***a*-**360***n*), the controller **320** recloses the solenoid safety valve **350***a*-**350***n* for that fuel supply line, and waits for a predetermined time period before attempting to refuel again.

[0058] If, upon reopening the solenoid safety valve **350***a*-**350***n* for a given fuel supply line, the controller **320** detects that the corresponding mechanical open-close valve **400**, **500** is once again open, the controller **320** supplies fuel to the reopened fuel line in order to begin refueling the receiving fuel tank.

[0059] In an embodiment, as a safety feature, the controller **320** limits the amount of time that a supply of fuel can be provided to any fuel line by periodically shutting off the flow of fuel, even if the receiving fuel tank is not full. This allows the controller **320** to recheck the status of the fuel line after a scheduled time out, until the next cycle.

[0060] In an embodiment, the controller **320** staggers the scheduled status check of the fuel lines, such that the system attempts refueling of only one or several fuel lines at a time. This allows the system to better regulate and maintain pump pressure in the system, in order to supply fuel to the fuel lines which are open at any time.

[0061] Thus, in an aspect, there is provided a refueling system, comprising: a fuel supply tank; a controller for supplying fuel from the fuel supply tank to a plurality of fuel lines; a plurality of refueling hoses, each refueling hose connected to one of the plurality of fuel lines at an upstream end; and a plurality of mechanical open-close valves, each mechanical open-close valve terminating one of the plurality of refueling hoses at a downstream end, and having a buoyant body adapted to mechanically actuate the mechanical open-close valve.

[0062] In an embodiment, the plurality of mechanical open-close valves are adapted to pass through a respective inner neck diameter of a receiving fuel tank being refueled.

[0063] In another embodiment, the buoyant body is buoyant in liquid fuel in the receiving fuel tank.

[0064] In another embodiment, at least one of the mechanical open-close valves is adapted to be actuated as the buoyant body rises or lowers relative to an upper body of the mechanical open-close valves in dependence on the level of liquid fuel in the receiving fuel tank.

[0065] In another embodiment, the buoyant body in use is vertically aligned with an upper body housing the mechanical open-close valve, and the system is adapted to actuate the mechanical open-close valve utilizing a vertically oriented plunger.

[0066] In another embodiment, the buoyant body is attached to an arm which is rotatably joined to an upper body housing the mechanical open-close valve, and is adapted to actuate the mechanical open-close valve utilizing rotation at the elbow joint to a predefined angle.

[0067] In another embodiment, the position of the buoyant body is adjustable relative to an upper body housing the mechanical open-close valve to calibrate when the mechanical open-close valve is actuated.

[0068] In another embodiment, the refueling system further comprises a controller which is adapted to monitor a flow meter on each fuel line, and to detect when a mechanical open-close valve has been actuated to shut off the flow of fuel to a receiving fuel tank.

[0069] In another embodiment, the refueling system further comprises a safety valve adapted to engage upon detection that flow of fuel to a receiving fuel tank has stopped.

[0070] In another embodiment, the refueling system is further adapted to periodically disengage the safety valve to attempt to refuel a receiving fuel tank, and upon detection that the corresponding mechanical open-close valve remains closed, reengage the safety valve.

[0071] In another embodiment, the refueling system is further adapted to periodically disengage the safety valve to attempt to refuel a receiving fuel tank, and upon detection that the corresponding mechanical open-close valve is open, continuing the refueling.

[0072] In another embodiment, the refueling system is further adapted to periodically stop one or more fuel lines supplying a receiving fuel tank to confirm the status of the one or more fuel lines.

[0073] In another aspect, there is provided a method of refueling a plurality of receiving fuel tanks, comprising: providing a fuel supply tank; providing a controller for supplying fuel from the fuel supply tank to a plurality of fuel lines; providing a plurality of refueling hoses, each refueling hose connected to one of the plurality of fuel lines at an upstream end; and mechanically actuating a plurality of mechanical open-close valves having a buoyant body, each mechanical open-close valve terminating one of the plurality of refueling hoses at a downstream end.

[0074] In an embodiment, the plurality of mechanical open-close valves are adapted to pass through a respective inner neck diameter of a receiving fuel tank being refueled.

[0075] In another embodiment, at least one of the buoyant body is buoyant in liquid fuel in the receiving fuel tank.

[0076] In another embodiment, the method further comprises actuating at least one of the mechanical open-close valves as the buoyant body rises or lowers relative to an upper body of the mechanical open-close valves in dependence on the level of liquid fuel in the receiving fuel tank.

[0077] In another embodiment, the method further comprises actuating at least one of the mechanical open-close valves utilizing a vertical plunger coupled to a buoyant body which is vertically aligned with an upper body housing the mechanical open-close valve.

[0078] In another embodiment, the method further comprises actuating at least one of the mechanical open-close valves utilizing a buoyant body is attached to an arm which is rotatably joined to an upper body housing the mechanical open-close valve.

[0079] In another embodiment, the method further comprises adjusting the position of the buoyant body relative to an upper body housing the mechanical open-close valve to calibrate when the mechanical open-close valve is actuated.

[0080] In another embodiment, the method further comprises monitoring a flow meter on each fuel line to detect actuation of a mechanical open-close valve.

[0081] In another embodiment, the method further comprises engaging a safety valve upon detection that flow of fuel to a receiving fuel tank has stopped.

[0082] In another embodiment, the method further comprises periodically disengaging the safety valve to attempt to refuel a receiving fuel tank, and upon detection that the corresponding mechanical open-close valve remains closed, reengaging the safety valve.

[0083] In another embodiment, the method further comprises periodically disengaging the safety valve to attempt to refuel a receiving fuel tank, and upon detection that the corresponding mechanical open-close valve is open, continuing the refueling.

[0084] In another embodiment, the method further comprises periodically stopping one or more fuel lines supplying a receiving fuel tank to confirm the status of the one or more fuel lines.

[0085] In another aspect, there is provided an apparatus for controlling the flow of fuel into a receiving fuel tank, comprising: a connector for connection to a downstream end of a refueling hose; a mechanical open-close valve adapted to be passed through a respective inner neck diameter of a receiving fuel tank being refueled; and a buoyant body buoyant in liquid fuel, and adapted to mechanically actuate the mechanical open-close valve in dependence upon the level of liquid fuel in the receiving fuel tank.

[0086] While illustrative embodiments have been described above by way of example, it will be appreciated that various changes and modifications may be made without departing from the scope of the system and method, which is defined by the following claims.

1. A refueling system, comprising:

a fuel supply tank;

a controller for supplying fuel from the fuel supply tank to a plurality of fuel lines;

a plurality of refueling hoses, each refueling hose connected to one of the plurality of fuel lines at an upstream end; and

a plurality of mechanical open-close valves, each mechanical open-close valve terminating one of the plurality of refueling hoses at a downstream end, and having a buoyant body adapted to mechanically actuate the mechanical open-close valve.

2. The refueling system of claim **1**, wherein the plurality of mechanical open-close valves are adapted to pass through a respective inner neck diameter of a receiving fuel tank being refueled.

3. The refueling system of claim **2**, wherein the buoyant body is buoyant in liquid fuel in the receiving fuel tank.

4. The refueling system of claim **3**, wherein at least one of the mechanical open-close valves is adapted to be actuated as the buoyant body rises or lowers relative to an upper body of the mechanical open-close valves in dependence on the level of liquid fuel in the receiving fuel tank.

5. The refueling system of claim **3**, wherein the buoyant body in use is vertically aligned with an upper body housing the mechanical open-close valve, and the system is adapted to actuate the mechanical open-close valve utilizing a vertically oriented plunger.

6. The refueling system of claim **3**, wherein the buoyant body is attached to an arm which is rotatably joined to an upper body housing the mechanical open-close valve, and is adapted to actuate the mechanical open-close valve utilizing rotation at the elbow joint to a predefined angle.

7. The refueling system of claim **3**, wherein the position of the buoyant body is adjustable relative to an upper body housing the mechanical open-close valve to calibrate when the mechanical open-close valve is actuated.

8. The refueling system of claim **1**, further comprising a controller which is adapted to monitor a flow meter on each fuel line, and to detect when a mechanical open-close valve has been actuated to shut off the flow of fuel to a receiving fuel tank.

9. The refueling system of claim **8**, further comprising a safety valve adapted to engage upon detection that flow of fuel to a receiving fuel tank has stopped.

10. The refueling system of claim **9**, wherein the system is further adapted to periodically disengage the safety valve to attempt to refuel a receiving fuel tank, and upon detection that the corresponding mechanical open-close valve remains closed, reengage the safety valve.

11. The refueling system of claim **9**, wherein the system is further adapted to periodically disengage the safety valve to attempt to refuel a receiving fuel tank, and upon detection that the corresponding mechanical open-close valve is open, continuing the refueling.

12. The refueling system of claim **1**, wherein the system is further adapted to periodically stop one or more fuel lines supplying a receiving fuel tank to confirm the status of the one or more fuel lines.

13. A method of refueling a plurality of receiving fuel tanks, comprising:

providing a fuel supply tank;

providing a controller for supplying fuel from the fuel supply tank to a plurality of fuel lines;

providing a plurality of refueling hoses, each refueling hose connected to one of the plurality of fuel lines at an upstream end; and

mechanically actuating a plurality of mechanical open-close valves having a buoyant body, each mechanical open-close valve terminating one of the plurality of refueling hoses at a downstream end.

14. The method of claim **13**, wherein the plurality of mechanical open-close valves are adapted to pass through a respective inner neck diameter of a receiving fuel tank being refueled.

15. The method of claim **14**, wherein at least one of the buoyant body is buoyant in liquid fuel in the receiving fuel tank.

16. The method of claim **15**, further comprising actuating at least one of the mechanical open-close valves as the buoyant body rises or lowers relative to an upper body of the mechanical open-close valves in dependence on the level of liquid fuel in the receiving fuel tank.

17. The method of claim **15**, further comprising actuating at least one of the mechanical open-close valves utilizing a

vertical plunger coupled to a buoyant body which is vertically aligned with an upper body housing the mechanical open-close valve.

18. The method of claim **15**, further comprising actuating at least one of the mechanical open-close valves utilizing a buoyant body is attached to an arm which is rotatably joined to an upper body housing the mechanical open-close valve.

19. The method of claim **15**, further comprising adjusting the position of the buoyant body relative to an upper body housing the mechanical open-close valve to calibrate when the mechanical open-close valve is actuated.

20. The method of claim **11**, further comprising monitoring a flow meter on each fuel line to detect actuation of a mechanical open-close valve.

21. The method of claim **20**, further comprising engaging a safety valve upon detection that flow of fuel to a receiving fuel tank has stopped.

22. The method of claim **21**, further comprising periodically disengaging the safety valve to attempt to refuel a receiving fuel tank, and upon detection that the corresponding mechanical open-close valve remains closed, reengaging the safety valve.

23. The method of claim **21**, further comprising periodically disengaging the safety valve to attempt to refuel a receiving fuel tank, and upon detection that the corresponding mechanical open-close valve is open, continuing the refueling.

24. The method of claim **1**, further comprising periodically stopping one or more fuel lines supplying a receiving fuel tank to confirm the status of the one or more fuel lines.

25. An apparatus for controlling the flow of fuel into a receiving fuel tank, comprising:

a connector for connection to a downstream end of a refueling hose;

a mechanical open-close valve adapted to be passed through a respective inner neck diameter of a receiving fuel tank being refueled; and

a buoyant body buoyant in liquid fuel, and adapted to mechanically actuate the mechanical open-close valve in dependence upon the level of liquid fuel in the receiving fuel tank.

* * * * *