US010815118B2

(12) **United States Patent**
Shock

(10) **Patent No.: US 10,815,118 B2**
(45) **Date of Patent: *Oct. 27, 2020**

(54) **MOBILE DISTRIBUTION STATION HAVING SENSOR COMMUNICATION LINES ROUTED WITH HOSES**

(71) Applicant: **Fuel Automation Station, LLC**, Birmingham, MI (US)

(72) Inventor: **Ricky Dean Shock**, Victoria, TX (US)

(73) Assignee: **FUEL AUTOMATION STATION, LLC**, Birmingham, MI (US)

(*) Notice: Subject to any disclaimer, the term of this patent is extended or adjusted under 35 U.S.C. 154(b) by 88 days.

This patent is subject to a terminal disclaimer.

(21) Appl. No.: **16/148,403**

(22) Filed: **Oct. 1, 2018**

(65) **Prior Publication Data**

US 2019/0031496 A1 Jan. 31, 2019

Related U.S. Application Data

(63) Continuation of application No. 15/290,304, filed on Oct. 11, 2016, now Pat. No. 10,087,065.

(51) **Int. Cl.**
B67D 7/04 (2010.01)
B67D 7/46 (2010.01)
(Continued)

(52) **U.S. Cl.**
CPC ***B67D 7/465*** (2013.01); ***B67D 7/04*** (2013.01); ***B67D 7/40*** (2013.01); ***B67D 7/845*** (2013.01); *B67D 2210/0006* (2013.01)

(58) **Field of Classification Search**
CPC B67D 7/465; B67D 7/40; B67D 7/845; B67D 2210/0006
(Continued)

(56) **References Cited**

U.S. PATENT DOCUMENTS

2,340,070 A 1/1944 McCauley et al.
2,516,150 A 7/1950 Samiran
(Continued)

FOREIGN PATENT DOCUMENTS

DE 1147397 4/1963
DE 20106400 10/2001
(Continued)

OTHER PUBLICATIONS

Shimazaki, H. (1986). Development of centralized fueling and management system of kerosene heating machine. Nisseki Technical Review, vol. 28(4). Jul. 1986. pp. 184-188.
(Continued)

Primary Examiner — Nicolas A Arnett
(74) *Attorney, Agent, or Firm* — Carlson, Gaskey & Olds, P.C.

(57) **ABSTRACT**

A distribution station includes a mobile trailer, a pump, a manifold connected with the pump, reels, flow passages connected to the manifold and running through the reels, hoses, connected the flow passages via the reels, valves situated between the manifold and the reels and operable to control fluid flow through the flow passages, fluid level sensors connected or connectable with the hoses, and a controller configured to operate the valves responsive to fluid level thresholds to control fluid flow to the hoses.

18 Claims, 4 Drawing Sheets

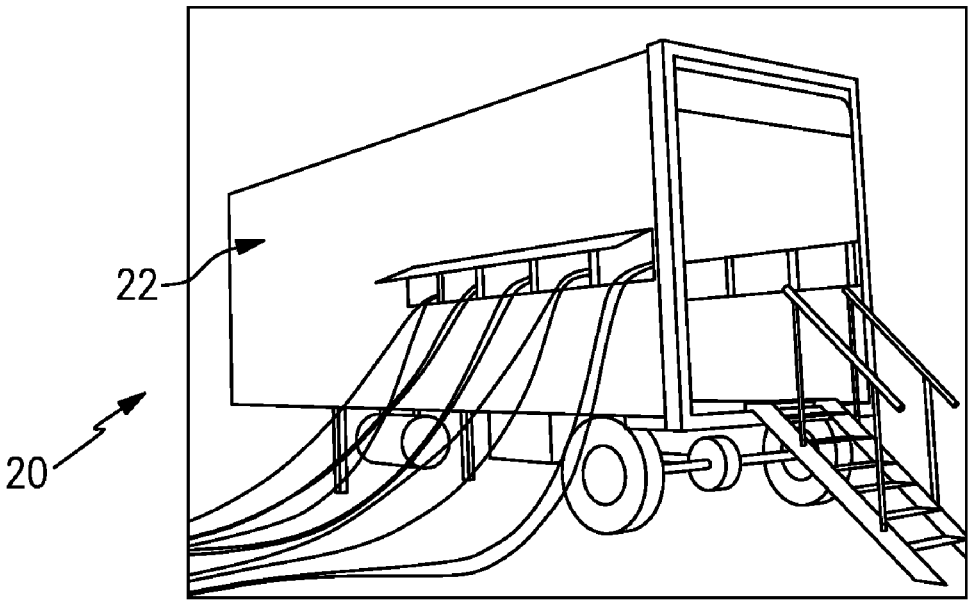

(51) **Int. Cl.**
B67D 7/40 (2010.01)
B67D 7/84 (2010.01)

(58) **Field of Classification Search**
USPC 141/94–95, 231
See application file for complete search history.

(56) **References Cited**

U.S. PATENT DOCUMENTS

2,769,572	A	11/1956	Harman et al.	
2,777,461	A	1/1957	Wildhaber	
2,966,921	A	1/1961	Whiteman	
3,028,010	A	4/1962	Headrick	
3,136,295	A	6/1964	Gramo	
3,547,141	A	12/1970	Alexander	
3,605,798	A	9/1971	Green et al.	
3,618,643	A	11/1971	Thomson	
3,625,399	A	12/1971	Heisler	
3,677,284	A	7/1972	Mendez	
3,881,509	A	5/1975	Newton	
4,139,019	A	2/1979	Bresie et al.	
4,284,210	A	8/1981	Horak	
4,511,311	A	4/1985	Olson	
4,591,115	A	5/1986	DeCarlo	
4,651,788	A	3/1987	Grosskreuz et al.	
4,728,005	A	3/1988	Jacobs et al.	
4,930,665	A	6/1990	Devine	
5,406,988	A	4/1995	Hopkins	
5,454,408	A	10/1995	DiBella et al.	
5,465,766	A	11/1995	Siegele et al.	
5,503,199	A	4/1996	Whitley, II et al.	
5,538,051	A	7/1996	Brown et al.	
5,551,309	A	9/1996	Goossens et al.	
5,651,400	A	7/1997	Corts et al.	
5,660,358	A	8/1997	Grafwallner et al.	
5,708,424	A	1/1998	Orlando et al.	
5,749,339	A	5/1998	Graham et al.	
5,887,567	A	3/1999	White	
5,927,603	A	7/1999	McNabb	
5,884,675	A	12/1999	Krasnov	
6,098,646	A	8/2000	Hennemann et al.	
6,206,056	B1	3/2001	Lagache	
6,564,615	B1	5/2003	Carter	
6,601,000	B1	7/2003	Barlian et al.	
6,651,706	B2	11/2003	Litt	
6,697,705	B2	2/2004	Johnson et al.	
6,745,801	B1	6/2004	Cohen	
6,755,225	B1	6/2004	Niedwiecki et al.	
6,761,194	B1	7/2004	Blong	
6,779,569	B1	8/2004	Teer, Jr. et al.	
6,786,245	B1	9/2004	Eichelberger et al.	
7,063,276	B2	6/2006	Newton	
7,106,026	B2	9/2006	Moore	
7,353,808	B2	4/2008	Kakoo	
7,415,995	B2	8/2008	Plummer et al.	
7,458,543	B2	12/2008	Cutler et al.	
7,568,507	B2	8/2009	Farese et al.	
7,602,143	B2	12/2009	Capizzo	
7,628,182	B2	12/2009	Poulter	
7,937,215	B2	5/2011	Humphrey	
7,938,151	B2	5/2011	Hockner	
8,069,885	B2	12/2011	Kederer	
8,448,750	B2	5/2013	Gaugush et al.	
9,346,662	B2	5/2016	Van Vliet et al.	
9,371,830	B2	6/2016	Moffitt, Jr.	
9,371,831	B2	6/2016	Moffitt, Jr.	
9,434,598	B2	9/2016	Pick	
9,586,805	B1	3/2017	Shock	
9,725,295	B2	8/2017	McKay	
9,790,080	B1 *	10/2017	Shock	B67D 7/3272
9,815,683	B1 *	11/2017	Kalala	B67D 7/362
9,981,840	B2 *	5/2018	Shock	B67D 7/465
10,087,065	B2 *	10/2018	Shock	B67D 7/465
10,150,662	B1 *	12/2018	Shock	B67D 7/74
10,196,258	B2 *	2/2019	Kalala	B67D 7/40
10,289,126	B2 *	5/2019	Shock	G05D 9/12
10,303,190	B2 *	5/2019	Shock	G05D 9/12
10,442,676	B1 *	10/2019	Walther	B65H 75/4478
10,513,426	B2 *	12/2019	Shock	B67D 7/3218
2001/0017815	A1	8/2001	Ackermann et al.	
2004/0163731	A1	8/2004	Eichelberger	
2004/0187950	A1	9/2004	Cohen	
2005/0109561	A1	5/2005	Chopra	
2007/0079891	A1	4/2007	Farese et al.	
2007/0164031	A1	7/2007	Holz	
2007/0181212	A1	8/2007	Fell	
2011/0197988	A1	8/2011	Van Vliet	
2016/0076533	A1	3/2016	Moffitt, Jr.	
2019/0119096	A1 *	4/2019	Haile	B67D 7/0401

FOREIGN PATENT DOCUMENTS

DE	10309307	9/2004
DE	102006025025	12/2006
DE	102006038652	2/2008
EP	0161042	11/1985
EP	0433041	6/2001
GB	2485832	5/2012
RU	28347	3/2003
RU	91135	1/2010
RU	2452668	1/2012
SU	949644	8/1982
WO	0177006	10/2001
WO	03029721	4/2003
WO	03093118	11/2003
WO	2006005686	1/2006
WO	2006116572	11/2006
WO	2007087849	8/2007
WO	2008083830	7/2008
WO	2009026607	3/2009
WO	20090608065	6/2009

OTHER PUBLICATIONS

Technical Document. Surface vehicle standard. SAE International. Sep. 2014. pp. 1-5.
Oilfield Business: Technologies. Frac Shack Inc. introduces world's first Bi-Fuel Distribution Unit for hydraulic fracturing industry. Texas Oil & Gas: The National Magazine for Oil & Gas in Texas. vol. 4, Issue 2. 2015. p. 27.
Frac Shack International. Publications & Endorsements. Retrieved Aug. 23, 2016 from: http://www.fracshack.com.
Frac Shack International. Technology. Retrieved Aug. 23, 2016 from: http://www.fracshack.com.
Frac Shack International. Design Benefits. Retrieved Aug. 23, 2016 from: http://www.fracshack.com.
Frac Shack International. Service. Retrieved Aug. 23, 2016 from: http://www.fracshack.com.
Frac Shack International. Frac Shack Series—Series A. Retrieved Aug. 23, 2016 from: http://www.fracshack.com.
Frac Shack International. Frac Shack Series—Series B. Retrieved Aug. 23, 2016 from: http://www.fracshack.com.
Frac Shack International. Frac Shack Series—Series C. Retrieved Aug. 23, 2016 from: http://www.fracshack.com.
Frac Shack International. Frac Shack Series—Series D. Retrieved Aug. 23, 2016 from: http://www.fracshack.com.
Frac Shack International. Frac Shack Series—Series E. Retrieved Aug. 23, 2016 from: http://www.fracshack.com.
Frac Shack International. Frac Shack Series—Series EG. Retrieved Aug. 23, 2016 from: http://www.fracshack.com.
Mann Tek. Dry Disconnect Couplings. Retrieved Jul. 22, 2016 from: http://www.manntek.com/products/drydisconnectcouplings p. 1-4.
Mann Tek. Dry Aviation Couplings. Retrieved Jul. 22, 2016 from: http://www.manntek.com/products/dryaviationcouplings p. 1-4.
Waterman, J. (2013). Better Safe than Sorry: Frac Shack a welcome addition to the oil patch. Jan. 2, 2013. Retrieved Aug. 23, 2016 from: http://www.pipelinenewsnorth.ca/better-safe-than-sorry-1.1123066.

* cited by examiner

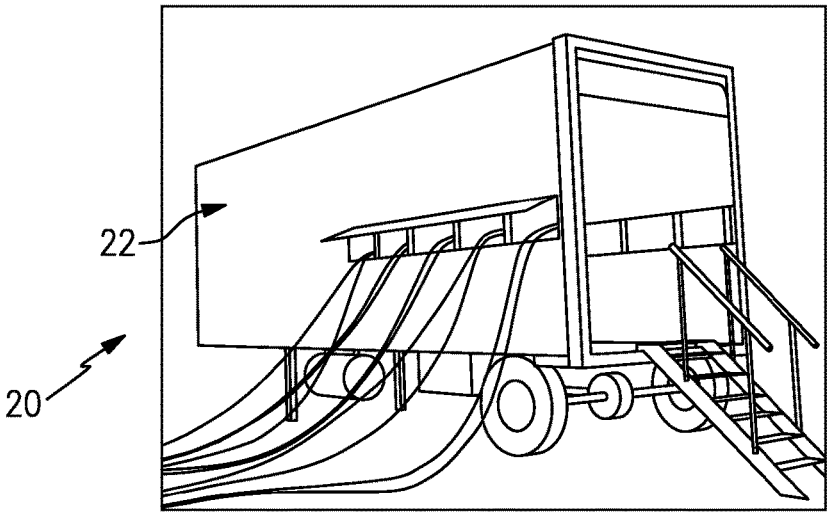
22
20

FIG.1

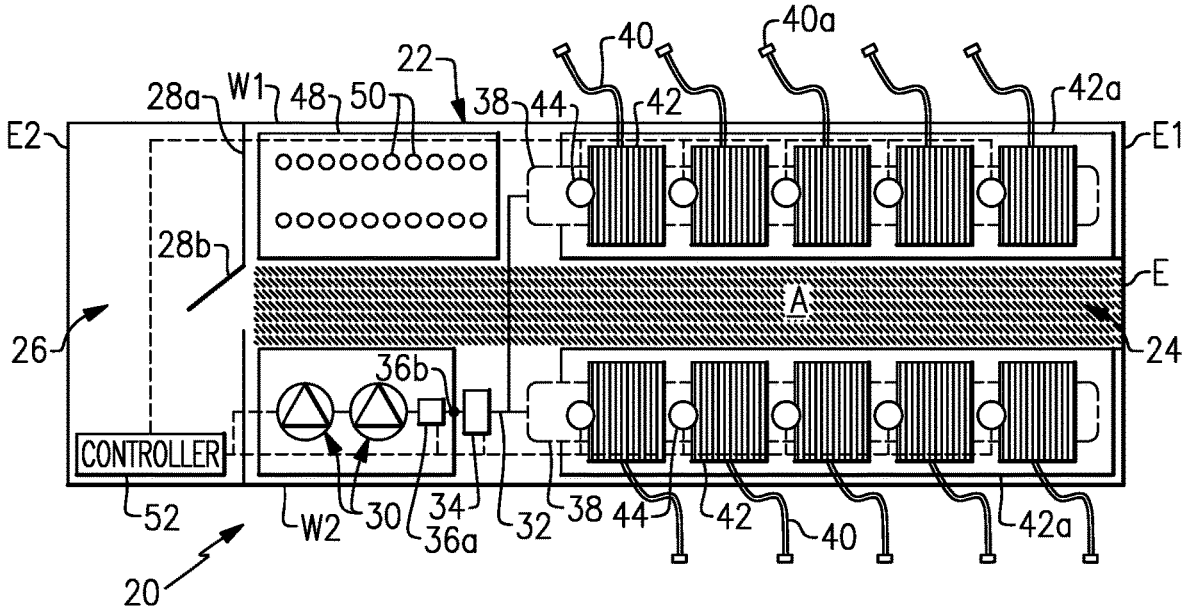
40
40a
22
28a
W1
48
50
38
44
42
42a
E2
E1
28b
E
A
26
24
36b
CONTROLLER
52
W2
30
34
36a
32
38
44
42
40
42a
20

FIG.2

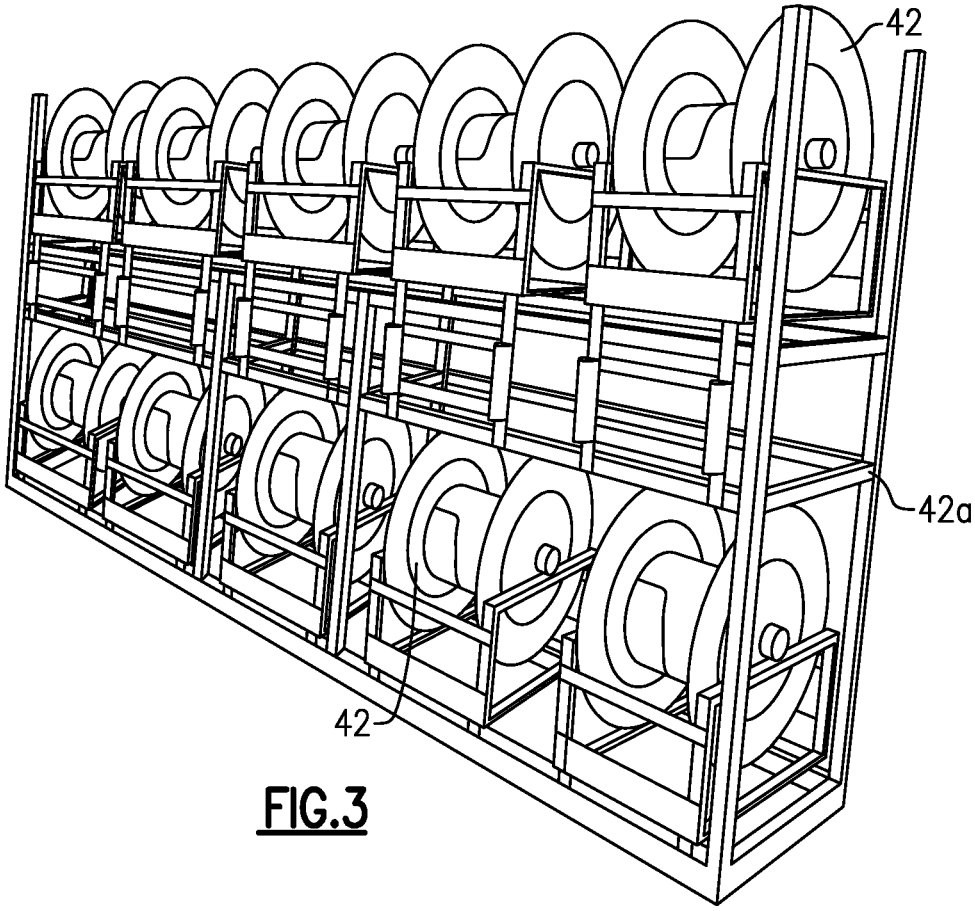

FIG.3

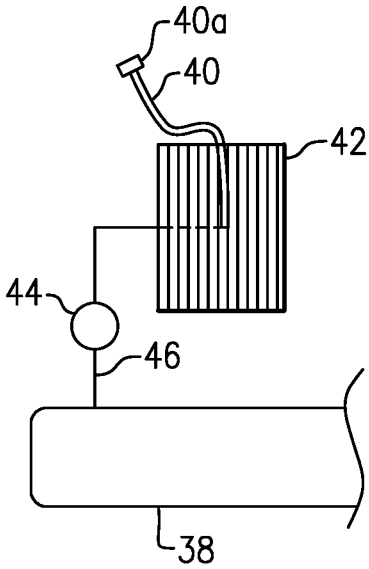

FIG.4

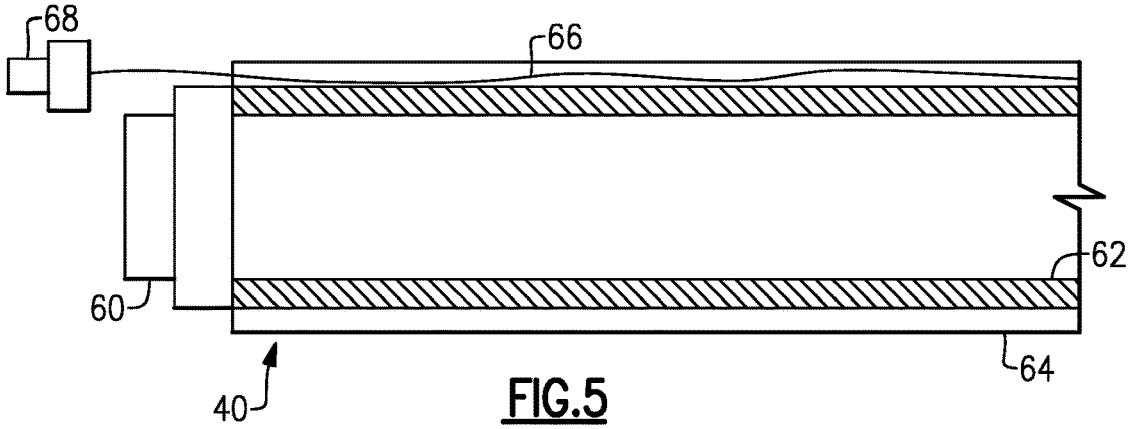

FIG.5

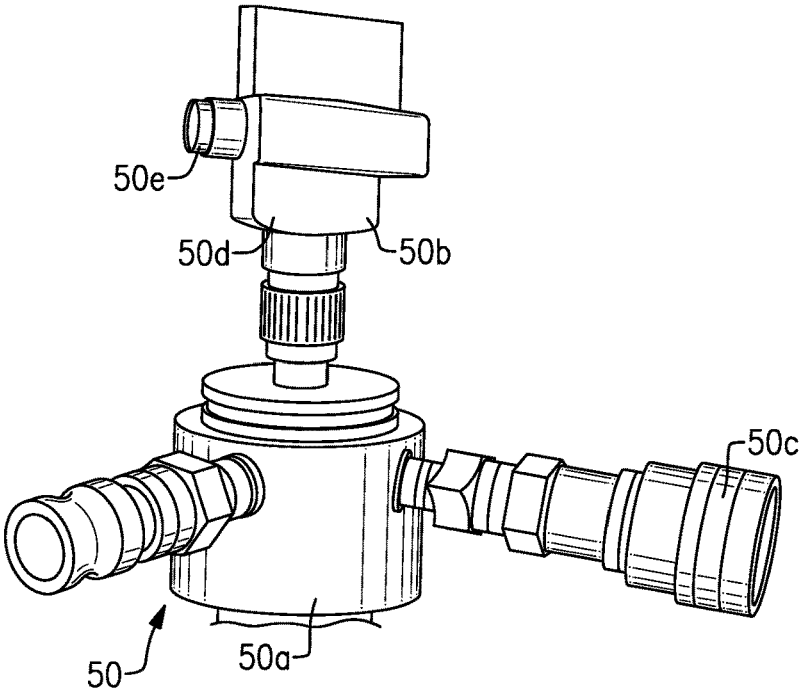

FIG.6

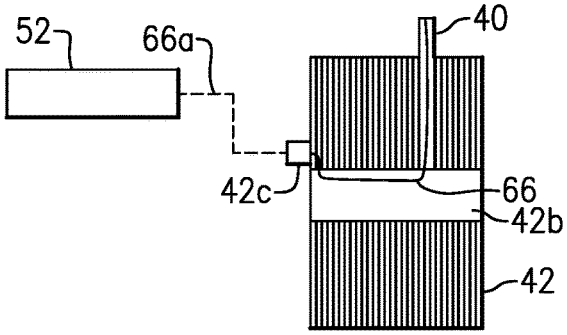

FIG.7

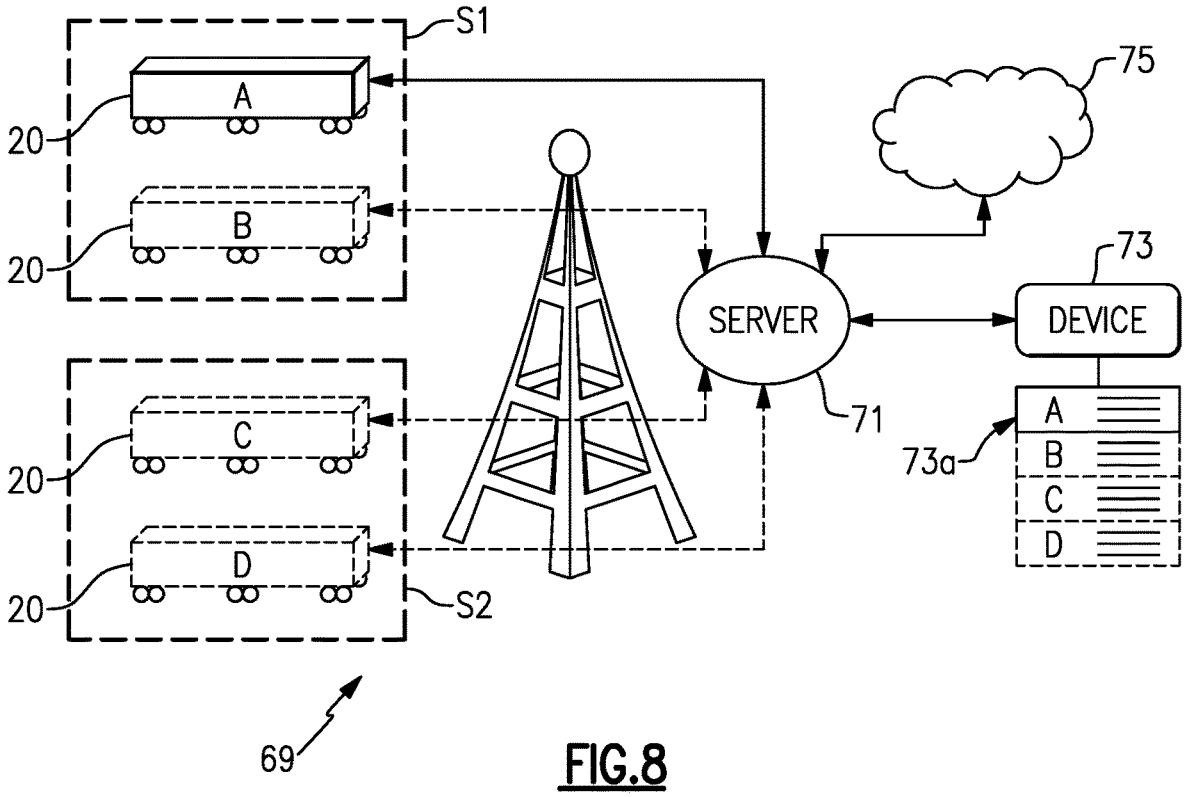

FIG.8

MOBILE DISTRIBUTION STATION HAVING SENSOR COMMUNICATION LINES ROUTED WITH HOSES

CROSS-REFERENCE TO RELATED APPLICATION

The present disclosure is a continuation of U.S. patent application Ser. No. 15/290,304 filed Oct. 11, 2016.

BACKGROUND

Hydraulic fracturing (also known as fracking) is a well-stimulation process that utilizes pressurized liquids to fracture rock formations. Pumps and other equipment used for hydraulic fracturing typically operate at the surface of the well site. The equipment may operate until refueling is needed, at which time the equipment may be shut-down for refueling. Shut-downs are costly and reduce efficiency. More preferably, to avoid shut-downs fuel is replenished in a hot-refueling operation while the equipment continues to run. This permits fracking operations to proceed continuously. However, hot-refueling can be difficult to reliably sustain for the duration of the fracking operation.

SUMMARY

A distribution station according to an example of the present disclosure includes a mobile trailer, a pump, a manifold connected with the pump, reels, flow passages connected to the manifold and running through the reels, hoses, connected the flow passages via the reels, valves situated between the manifold and the reels and operable to control fluid flow through the flow passages, fluid level sensors connected or connectable with the hoses, and a controller configured to operate the valves responsive to fluid level thresholds to control fluid flow to the hoses.

BRIEF DESCRIPTION OF THE DRAWINGS

The various features and advantages of the present disclosure will become apparent to those skilled in the art from the following detailed description. The drawings that accompany the detailed description can be briefly described as follows.

FIG. **1** illustrates an example mobile distribution station.

FIG. **2** illustrates an internal layout of a mobile distribution station.

FIG. **3** illustrates an isolated view of hose reels on a support rack used in a mobile distribution station.

FIG. **4** illustrates an example of a connection between a manifold, a control valve, and a reel.

FIG. **5** illustrates a sectioned view of an example hose for a mobile distribution station.

FIG. **6** illustrates an example of an integrated cap sensor for a mobile distribution station.

FIG. **7** illustrates an example of the routing of a sensor communication line through a reel in a mobile distribution station.

FIG. **8** illustrates a system that can be used to remotely monitor and manage one or more mobile distribution stations.

DETAILED DESCRIPTION

FIG. **1** illustrates a mobile distribution station **20** and FIG. **2** illustrates an internal layout of the station **20**. As will be

described, the station **20** may serve in a "hot-refueling" capacity to distribute fuel to multiple pieces of equipment while the equipment is running, such as fracking equipment at a well site. As will be appreciated, the station **20** is not limited to applications for fracking or for delivering fuel. The examples herein may be presented with respect to fuel delivery, but the station **20** may be used in mobile delivery of other fluids, in other gas/petroleum recovery operations, or in other operations where mobile refueling or fluid delivery will be of benefit.

In this example, the station **20** includes a mobile trailer **22**. Generally, the mobile trailer **22** is elongated and has first and second opposed trailer side walls W**1** and W**2** that join first and second opposed trailer end walls E**1** and E**2**. Most typically, the trailer **22** will also have a closed top (not shown). The mobile trailer **22** may have wheels that permit the mobile trailer **22** to be moved by a vehicle from site to site to service different hot-refueling operations. In this example, the mobile trailer **22** has two compartments. A first compartment **24** includes the physical components for distributing fuel, such as diesel fuel, and a second compartment **26** serves as an isolated control room for managing and monitoring fuel distribution. The compartments **24**/**26** are separated by an inside wall **28***a* that has an inside door **28***b*.

The first compartment **24** includes one or more pumps **30**. Fuel may be provided to the one or more pumps **30** from an external fuel source, such as a tanker truck on the site. On the trailer **22**, the one or more pumps **30** are fluidly connected via a fuel line **32** with a high precision register **34** for metering fuel. The fuel line **32** may include, but is not limited to, hard piping. In this example, the fuel line **32** includes a filtration and air eliminator system **36***a* and one or more sensors **36***b*. Although optional, the system **36***a* is beneficial in many implementations, to remove foreign particles and air from the fuel prior to delivery to the equipment. The one or more sensors **36***b* may include a temperature sensor, a pressure sensor, or a combination thereof, which assist in fuel distribution management.

The fuel line **32** is connected with one or more manifolds **38**. In the illustrated example, the station **20** includes two manifolds **38** that arranged on opposed sides of the compartment **24**. As an example, the manifolds **38** are elongated tubes that are generally larger in diameter than the fuel line **32** and that have at least one inlet and multiple outlets. Each hose **40** is wound, at least initially, on a reel **42** that is rotatable to extend or retract the hose **40** externally through one or more windows of the trailer **22**. Each reel **42** may have an associated motor to mechanically extend and retract the hose **40**.

As shown in an isolated view in FIG. **3**, the reels **42** are mounted on a support rack **42***a*. In this example, the support rack **42***a* is configured with upper and lower rows of reels **42**. Each row has five reels **42** such that each support rack **42***a* provides ten reels **42** and thus ten hoses **40**. There are two support racks **42***a* (FIG. **2**) arranged on opposed sides of the first compartment **24**, with an aisle (A) that runs between the support racks **42***a* from an outside door E to the inside door **28***b*. The station **20** therefore provides twenty hoses **40** in the illustrated arrangement, with ten hoses **40** provided on each side of the station **20**. As will be appreciated, fewer or additional reels and hoses may be used in alternative examples.

As shown in a representative example in FIG. **4**, each hose **40** is connected to a respective one of the reels **42** and a respective one of a plurality of control valves **44**. For example, a secondary fuel line **46** leads from the manifold **38** to the reel **42**. The control valve **44** is in the secondary

fuel line **46**. The control valve **44** is moveable between open and closed positions to selectively permit fuel flow from the manifold **38** to the reel **42** and the hose **40**. For example, the control valve **44** is a powered valve, such as a solenoid valve.

In the illustrated example, the first compartment **24** also includes a sensor support rack **48**. The sensor support rack **48** holds integrated fuel cap sensors **50** (when not in use), or at least portions thereof. When in use, each integrated fuel cap sensor **50** is temporarily affixed to a piece of equipment (i.e., the fuel tank of the equipment) that is subject to the hot-refueling operation. Each hose **40** may include a connector end **40***a* and each integrated fuel cap sensor **50** may have a corresponding mating connector to facilitate rapid connection and disconnection of the hose **40** with the integrated fuel cap sensor **50**. For example, the connector end **40***a* and mating connector on the integrated fuel cap sensor **50** form a hydraulic quick-connect.

At least the control valves **44**, pump or pumps **30**, sensor or sensors **36***b*, and register **34** are in communication with a controller **52** located in the second compartment **26**. As an example, the controller **52** includes software, hardware, or both that is configured to carry out any of the functions described herein. In one further example, the controller **52** includes a programmable logic controller with a touch-screen for user input and display of status data. For example, the screen may simultaneously show multiple fluid levels of the equipment that is being serviced.

When in operation, the integrated fuel cap sensors **50** are mounted on respective fuel tanks of the pieces of equipment that are subject to the hot-refueling operation. The hoses **40** are connected to the respective integrated fuel cap sensors **50**. Each integrated fuel cap sensor **50** generates signals that are indicative of the fuel level in the fuel tank of the piece of equipment on which the integrated fuel cap sensor **50** is mounted. The signals are communicated to the controller **52**.

The controller **52** interprets the signals and determines the fuel level for each fuel tank of each piece of equipment. In response to a fuel level that falls below a lower threshold, the controller **52** opens the control valve **44** associated with the hose **40** to that fuel tank and activates the pump or pumps **30**. The pump or pumps **30** provide fuel flow into the manifolds **38** and through the open control valve **44** and reel **42** such that fuel is provided through the respective hose **40** and integrated fuel cap sensor **50** into the fuel tank. The lower threshold may correspond to an empty fuel level of the fuel tank, but more typically the lower threshold will be a level above the empty level to reduce the potential that the equipment completely runs out of fuel and shuts down. The controller **52** can also be programmed with a failsafe measure related to the operation of the fuel cap sensors **50**. As an example, once a control valve **44** is open, if the controller **52** does not detect a change in fuel level from the fuel cap sensor **50** associated with the control valve **44** within a preset time period, the controller **52** shuts the pump **30** off and closes the control valve **44**. Thus, if a hose **40** were to rupture, spillage of fuel is limited to the volume of fuel in the hose **40**. For instance, the preset time period may be three seconds, six seconds, ten seconds, or fifteen seconds, which may limit spillage to approximately fifteen gallons for a given size of hose.

The controller **52** also determines when the fuel level in the fuel tank reaches an upper threshold. The upper threshold may correspond to a full fuel level of the fuel tank, but more typically the upper threshold will be a level below the full level to reduce the potential for overflow. In response to reaching the upper threshold, the controller **52** closes the respective control valve **44** and ceases the pump or pumps **30**. If other control valves **44** are open or are to be opened, the pump or pumps **30** may remain on. The controller **52** can also be programmed with an electronic stop failsafe measure to prevent over-filling. As an example, once an upper threshold is reached on a first tank and the control valve **44** is closed, but the pump **30** is otherwise to remain on to fill other tanks, if the fuel level continues to rise in the first tank, the controller **52** shuts the pump **30** off.

Multiple control valves **44** may be open at one time, to provide fuel to multiple fuel tanks at one time. Alternatively, if there is demand for fuel from two or more fuel tanks, the controller **52** may sequentially open the control valves **44** such that the tanks are refueled sequentially. For instance, upon completion of refueling of one fuel tank, the controller **52** closes the control valve **44** of the hose **40** associated with that tank and then opens the next control valve **44** to begin refueling the next fuel tank. Sequential refueling may facilitate maintaining internal pressure in the manifold and fuel line **32** above a desired or preset pressure threshold to more rapidly deliver fuel. Similarly, the controller **52** may limit the number of control valves **44** that are open at any one instance in order to maintain the internal pressure in the manifold and fuel line **32** above a desired or preset threshold. The controller **52** may perform the functions above while in an automated operating mode. Additionally, the controller **52** may have a manual mode in which a user can control at least some functions through the PLC, such as starting and stopped the pump **30** and opening and closing control valves **44**. For example, manual mode may be used at the beginning of a job when initially filling tanks to levels at which the fuel cap sensors **50** can detect fuel and/or during a job if a fuel cap sensor **50** becomes inoperable. Of course, operating in manual mode may deactivate some automated functions, such as filling at the low threshold or stopping at the high threshold.

In addition to the use of the sensor signals to determine fuel level, or even as an alternative to use of the sensor signals, the refueling may be time-based. For instance, the fuel consumption of a given piece of equipment may be known such that the fuel tank reaches the lower threshold at known time intervals. The controller **52** is operable to refuel the fuel tank at the time intervals rather than on the basis of the sensor signals, although sensor signals may also be used to verify fuel level.

The controller **52** also tracks the amount of fuel provided to the fuel tanks. For instance, the register **34** precisely measures the amount of fuel provided from the pump or pumps **30**. As an example, the register **34** is an electronic register and has a resolution of about 0.1 gallons. The register **34** communicates measurement data to the controller **52**. The controller **52** can thus determine the total amount of fuel used to very precise levels. The controller **52** may also be configured to provide outputs of the total amount of fuel consumed. For instance, a user may program the controller **52** to provide outputs at desired intervals, such as by worker shifts or daily, weekly, or monthly periods. The outputs may also be used to generate invoices for the amount of fuel used. As an example, the controller **52** may provide a daily output of fuel use and trigger the generation of an invoice that corresponds to the daily fuel use, thereby enabling almost instantaneous invoicing.

In a further example, the integrated fuel cap sensors **50** are each hard-wired to the controller **52**. The term "hard-wired" or variations thereof refers to a wired connection between two components that serves for electronic communication there between, which here is a sensor and a controller. The

hard-wiring may facilitate providing more reliable signals from the integrated fuel cap sensors **50**. For instance, the many pieces of equipment, vehicles, workers, etc. at a site may communicate using wireless devices. The wireless signals may interfere with each other and, therefore, degrade communication reliability. Hard-wiring the integrated fuel cap sensors **50** to the controller **52** facilitates reduction in interference and thus enhances reliability.

In general, hard-wiring in a hot-refueling environment presents several challenges. For example, a site has many workers walking about and typically is located on rough terrain. Thus, as will be described below, each integrated fuel cap sensor **50** is hard-wired through the associated hose **40** to the controller **52**.

FIG. **5** illustrates a representative portion of one of the hoses **40** and, specifically, the end of the hose **40** that will be located at the fuel tank of the equipment being refueled. In this example, the hose **40** includes a connector **60** at the end for detachably connecting the hose **40** to the integrated fuel cap sensors **50**. The hose **40** is formed of a tube **62** and a sleeve **64** that circumscribes the tube **62**. As an example, the tube **62** may be a flexible elastomeric tube and the sleeve **64** may be a flexible fabric sleeve. The sleeve **64** is generally loosely arranged around the tube **62**, although the sleeve **64** may closely fit on the tube **62** to prevent substantial slipping of the sleeve **64** relative to the tube **62** during use and handling. Optionally, to further prevent slipping and/or to secure the sleeve **64**, bands may be tightened around the hose **40**. As an example, one or more steel or stainless steel bands can be provided at least near the ends of the hose **40**.

A plurality of sensor communication lines **66** (one shown) are routed with or in the respective hoses **40**. For instance, each line **66** may include a wire, a wire bundle, and/or multiple wires or wire bundles. In one further example, the line **66** is a low milliamp intrinsic safety wiring, which serves as a protection feature for reducing the concern for operating electrical equipment in the presence of fuel by limiting the amount of thermal and electrical energy available for ignition. In this example, the line **66** is routed through the hose **40** between (radially) the tube **62** and the sleeve **64**. The sleeve **64** thus serves to secure and protect the line **66**, and the sleeve **64** may limit spill and spewing if there is a hose **40** rupture. In particular, since the line **66** is secured in the hose **40**, the line **66** does not present a tripping concern for workers. Moreover, in rough terrain environments where there are stones, sand, and other objects that could damage the line **66** if it were free, the sleeve **64** shields the line **66** from direct contact with such objects. In further examples, the line **66** may be embedded or partially embedded in the tube **62** or the sleeve **64**.

In this example, the line **66** extends out from the end of the hose **40** and includes a connector **68** that is detachably connectable with a respective one of the integrated fuel cap sensors **50**. For example, FIG. **6** illustrates a representative example of one of the integrated fuel cap sensors **50**. The integrated fuel cap sensor **50** includes a cap portion **50***a* and a level sensor portion **50***b*. The cap portion **50***a* is detachably connectable with a port of a fuel tank. The cap portion **50***a* includes a connector port **50***c*, which is detachably connectable with the connector **60** of the hose **40**. The sensor portion **50***b* includes a sensor **50***d* and a sensor port **50***e* that is detachably connectable with the connector **68** of the line **66**. The fuel cap sensor **50** may also include a vent port that attaches to a drain hose, to drain any overflow into a containment bucket and/or reduce air pressure build-up in a fuel tank. Thus, a user may first mount the cap portion **50***a* on the fuel tank of the equipment, followed by connecting the hose **40** to the port **50***c* and connecting the line **66** to the port **50***e*.

The sensor **50***d* may be any type of sensor that is capable of detecting fluid or fuel level in a tank. In one example, the sensor **50***d* is a guided wave radar sensor. A guided wave radar sensor may include a transmitter/sensor that emits radar waves, most typically radio frequency waves, down a probe. A sheath may be provided around the probe. For example, the sheath may be a metal alloy (e.g., stainless steel or aluminum) or polymer tube that surrounds the probe. One or more bushings may be provided between the probe and the sheth, to separate the probe from the sheath. The sheath shields the probe from contact by external objects, the walls of a fuel tank, or other components in a fuel tank, which might otherwise increase the potential for faulty sensor readings. The probe serves as a guide for the radar waves. The radar waves reflect off of the surface of the fuel and the reflected radar waves are received into the transmitter/sensor. A sensor controller determines the "time of flight" of the radar waves, i.e., how long it takes from emission of the radar waves for the radar waves to reflect back to the transmitter/sensor. Based on the time, the sensor controller, or the controller **52** if the sensor controller does not have the capability, determines the distance that the radar waves travel. A longer distance thus indicates a lower fuel level (farther away) and a shorter distance indicates a higher fuel level (closer).

The line **66** routes through the hose **40** and back to the reel **42** in the trailer **22**. For example, the line **66** is also routed or hard-wired through the reel **42** to the controller **52**. FIG. **7** illustrates a representative example of the routing in the reel **42**. In this example, the reel **42** includes a spindle **42***b* about which the reel is rotatable. The spindle **42***b* may be hollow, and the line **66** may be routed through the spindle **42***b*. The reel **42** may also include a connector **42***c* mounted thereon. The connector **42***c* receives the line **66** and serves as a port for connection with another line **66***a* to the controller **52**.

The lines **66***a* may converge to one or more communication junction blocks or "bricks" prior to the controller **52**. The communication junction blocks may serve to facilitate the relay of the signals back to the controller **52**. The communication junction blocks may alternatively or additionally serve to facilitate identification of the lines **66**, and thus the signals, with respect to which of the hoses a particular line **66** is associated with. For instance, a group of communication junction blocks may have unique identifiers and the lines **66** into a particular communication junction block may be associated with identifiers. A signal relayed into the controller **52** may thus be associated with the identifiers of the communication junction blocks and a particular line **66** of that communication junction block in order to identify which hose **40** the signal is to be associated with. The valves **44** may also communicate with the controller **52** in a similar manner through the communication junction blocks.

As can be appreciated from the examples herein, the station **20** permits continuous hot-refueling with enhanced reliability. While there might generally be a tendency to choose wireless sensor communication for convenience, a hard-wired approach mitigates the potential for signal interference that can arise with wireless. Moreover, by hard-wiring the sensors through the hoses to the controller, wired communication lines are protected from exposure and do not pose additional concerns for workers on a site.

FIG. **8** illustrates a system **69** for remotely monitoring and/or managing at least one mobile distribution station **20** (A). It is to be appreciated that the system **69** may include additional mobile distribution stations, shown in phantom at **20** (B), **20** (C), and **20** (D) (collectively mobile distribution stations **20**), for example. The mobile distribution stations **20** may be located at a single work site or located across several different work sites S**1** and S**2**. Each mobile distribution station **20** is in communication with one or more servers **71** that are remotely located from the mobile distribution stations **20** and work sites S**1**/S**2**. In most implementations, the communication will be wireless.

The server **71** may include hardware, software, or both that is configured to perform the functions described herein. The server **71** may also be in communication with one or more electronic devices **73**. The electronic device **73** is external of or remote from the mobile fuel distribution stations **20**. For example, the electronic device **73** may be, but is not limited to, a computer, such as a desktop or laptop computer, a cellular device, or tablet device. The electronic device **73** may communicate and interact in the system **69** via data connectivity, which may involve internet connectivity, cellular connectivity, software, mobile application, or combinations of these.

The electronic device **73** may include a display **73***a*, such as an electronic screen, that is configured to display the fuel operating parameter data of each of the mobile distribution stations **20**. As an example, the electronic device **73** may display in real-time the operating parameter data of each of the mobile distribution stations **20** in the system **69** to permit remote monitoring and management control of the mobile distribution stations **20**. For instance, the operating parameter data may include fuel temperature, fuel pressure, fuel flow, total amount of fuel distributed, operational settings (e.g., low and high fuel level thresholds), or other parameters.

The server **71** may also be in communication with one or more cloud-based devices **75**. The cloud-based device **75** may include one or more servers and a memory for communicating with and storing information from the server **71**.

The server **71** is configured to communicate with the mobile distribution stations **20**. Most typically, the server **71** will communicate with the controller **52** of the mobile distribution station **20**. In this regard, the controller **52** of each mobile distribution station **20** may be include hardware, software, or both that is configured for external communication with the server **71**. For example, each controller **52** may communicate and interact in the system **69** via data connectivity, which may involve internet connectivity, cellular connectivity, software, mobile application, or combinations of these.

The server **71** is configured to receive operating parameter data from the mobile distribution stations **20**. The operating parameter data may include or represent physical measurements of operating conditions of the mobile distribution station **20**, status information of the mobile distribution station **20**, setting information of the mobile distribution station **20**, or other information associated with control or management of the operation of the mobile distribution station **20**.

For example, the server **71** utilizes the information to monitor and auto-manage the mobile distribution station **20**. The monitoring and auto-management may be for purposes of identifying potential risk conditions that may require shutdown or alert, purposes of intelligently enhancing operation, or purposes of reading fuel or fluid levels in real-time via the sensors **50**. As an example, the server **71** may utilize the information to monitor or display fuel or fluid levels, or determine whether the fuel operating parameter data is within a preset limit and send a control action in response to the operating parameter data being outside the preset limit. As will described in further detail below, the control action may be a shutdown instruction to the mobile fuel distribution stations **20**, an adjustment instruction to the mobile fuel distribution stations **20**, or an alert to the electronic device **73**.

Although a combination of features is shown in the illustrated examples, not all of them need to be combined to realize the benefits of various embodiments of this disclosure. In other words, a system designed according to an embodiment of this disclosure will not necessarily include all of the features shown in any one of the Figures or all of the portions schematically shown in the Figures. Moreover, selected features of one example embodiment may be combined with selected features of other example embodiments.

The preceding description is exemplary rather than limiting in nature. Variations and modifications to the disclosed examples may become apparent to those skilled in the art that do not necessarily depart from this disclosure. The scope of legal protection given to this disclosure can only be determined by studying the following claims.

What is claimed is:

1. A distribution station comprising:

a mobile trailer;

a pump on the mobile trailer;

a manifold on the mobile trailer and connected with the pump;

a plurality of reels on the mobile trailer;

a plurality of flow passages, each said flow passage being connected to the manifold and running through a respective one of the reels;

a plurality of hoses, each said hose being connected with a respective one of the flow passages via a respective one of the reels;

a plurality of valves on the mobile trailer, each said valve situated between the manifold and a respective different one of the reels and being operable to control fluid flow through a respective one of the flow passages;

a plurality of fluid level sensors, each said fluid level sensor being connected or connectable with a respective different one of the hoses; and

a controller configured to operate the valves responsive to fluid level thresholds to control fluid flow to the hoses.

2. The distribution station as recited in claim **1**, wherein the controller is configured to determine fluid levels based on signals from the fluid level sensors and determine whether one or more of the fluid levels are below one or more of the fluid level thresholds.

3. The distribution station as recited in claim **2**, wherein the controller is configured to open the valves for which the fluid levels are below the fluid level thresholds.

4. The distribution station as recited in claim **2**, further comprising a plurality of sensor communication lines, each said sensor communication line being connected or connectable with a respective different one of the fluid level sensors, and each said sensor communication line being routed with a respective different one of the hoses.

5. The distribution station as recited in claim **4**, wherein each of the hoses includes a tube and a sleeve that circumscribes the tube, and each said sensor communication line is routed in the respective different one of the hoses between the tube and the sleeve.

6. The distribution station as recited in claim **5**, wherein each said sensor communication line is routed through a respective different one of the reels.

7. The distribution station as recited in claim **6**, further comprising a plurality of connectors, each of the connectors being mounted on a respective different one of the reels and each of the connectors receiving a respective different one of the sensor communication lines.

8. The distribution station as recited in claim **7**, wherein each of the reels includes a respective spindle, and each of the sensor communication lines is routed through a respective different one of the spindles.

9. The distribution station as recited in claim **8**, wherein controller is operable to open and close the plurality of valves responsive to a fuel level threshold.

10. A distribution station comprising:

a mobile trailer;

a pump on the mobile trailer;

a manifold on the mobile trailer and connected with the pump;

a plurality of reels on the mobile trailer;

a plurality of hoses, each said hose being connected with the manifold and each said hose including a tube and a sleeve that circumscribes the tube;

a plurality of valves on the mobile trailer, each said valve situated between the manifold and a respective different one of the hoses and being operable to control fluid flow from the manifold to the respective different one of the hoses;

a plurality of fluid level sensors, each said fluid level sensor being connected or connectable with a respective different one of the hoses; and

a controller configured to operate the valves responsive to fluid level thresholds to control fluid flow to the hoses.

11. The distribution station as recited in claim **10**, wherein the sleeve is a fabric sleeve.

12. The distribution station as recited in claim **10**, further comprising bands around the hoses, the bands securing the sleeve on the tube.

13. The distribution station as recited in claim **12**, wherein the bands are steel.

14. The distribution station as recited in claim **10**, further comprising a communication line between the sleeve and the tube.

15. A distribution station comprising:

a mobile trailer including a pump, a manifold connected with the pump, reels, flow passages connected to the manifold and running through the reels, hoses connected with the flow passages via the reels and each of the hoses including a tube and a sleeve that circumscribes the tube, valves situated between the manifold and the reels and operable to control fluid flow through the flow passages, fluid level sensors connected or connectable with the hoses, and a controller configured to operate the valves responsive fluid level thresholds to control fluid flow to the hoses.

16. The distribution station as recited in claim **15**, wherein the controller is configured to determine fluid levels based on signals from the fluid level sensors, determine whether one or more of the fluid levels are below one or more of the fluid level thresholds, and open the valves for which the fluid levels are below the fluid level thresholds.

17. The distribution station as recited in claim **16**, further comprising a plurality of sensor communication lines, each said sensor communication line being connected or connectable with a respective different one of the fluid level sensors.

18. The distribution station as recited in claim **17**, wherein each said sensor communication line is routed in the respective different one of the hoses between the tube and the sleeve.

* * * * *