July 15, 1952 M. A. TABET 2,603,312

APPARATUS FOR WITHDRAWING OIL FROM THE CRANKCASE OF INTERNAL-COMBUSTION ENGINES

Filed Aug. 13, 1948 5 Sheets-Sheet 1

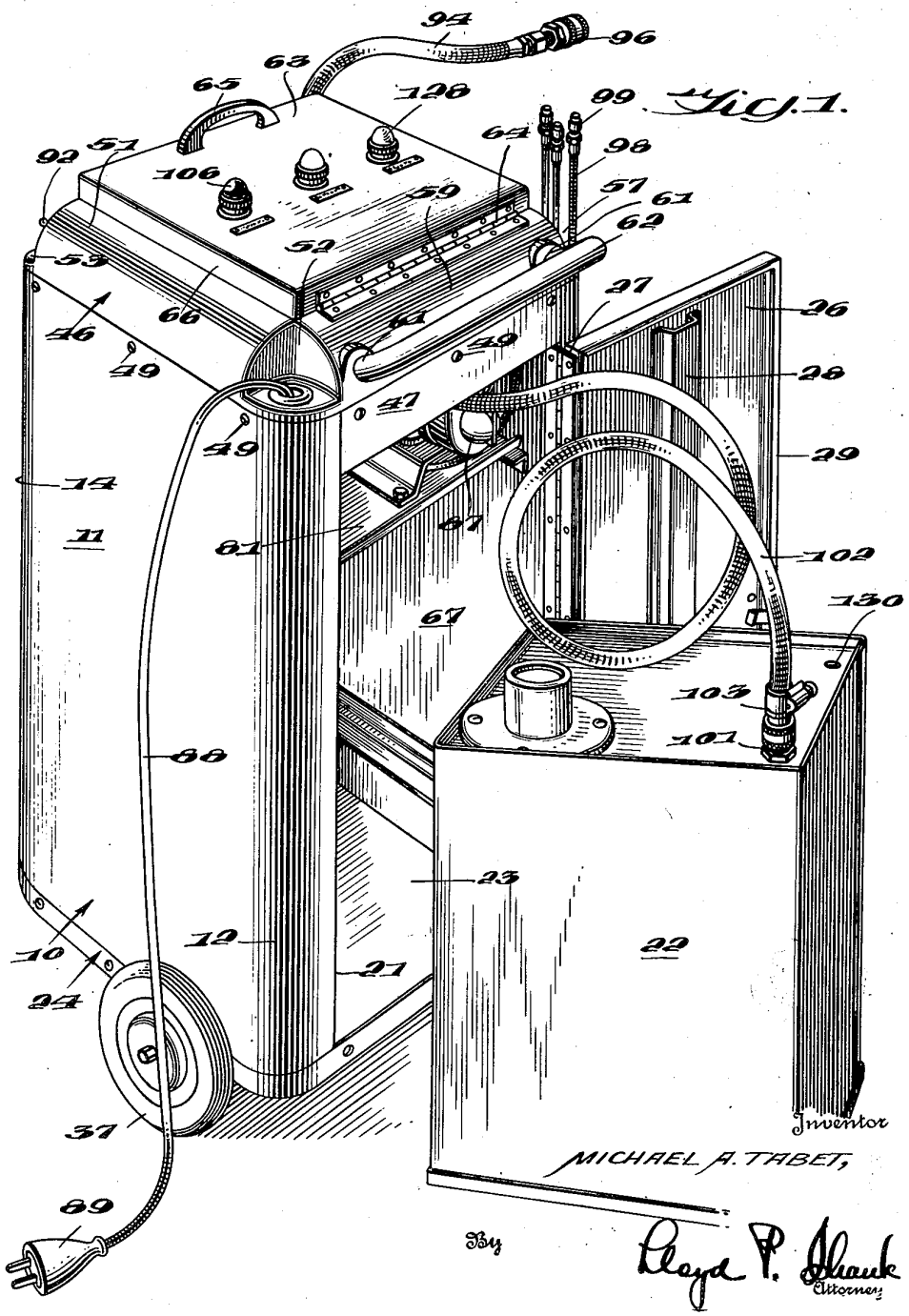

July 15, 1952 M. A. TABET 2,603,312

APPARATUS FOR WITHDRAWING OIL FROM THE CRANKCASE OF INTERNAL-COMBUSTION ENGINES

Filed Aug. 13, 1948 5 Sheets-Sheet 2

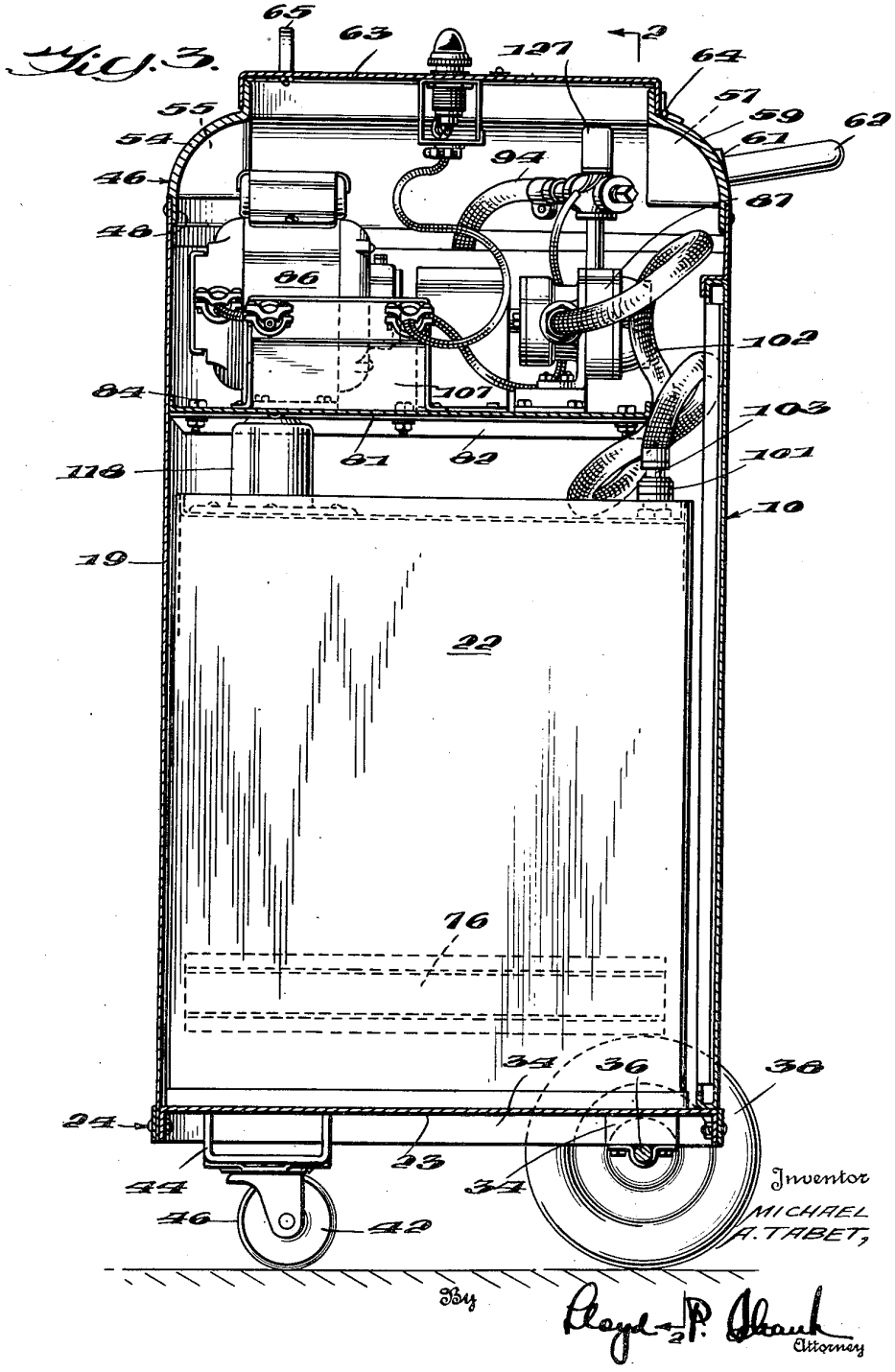

July 15, 1952 M. A. TABET 2,603,312

APPARATUS FOR WITHDRAWING OIL FROM THE CRANKCASE OF INTERNAL-COMBUSTION ENGINES

Filed Aug. 13, 1948 5 Sheets-Sheet 3

Fig. 4.

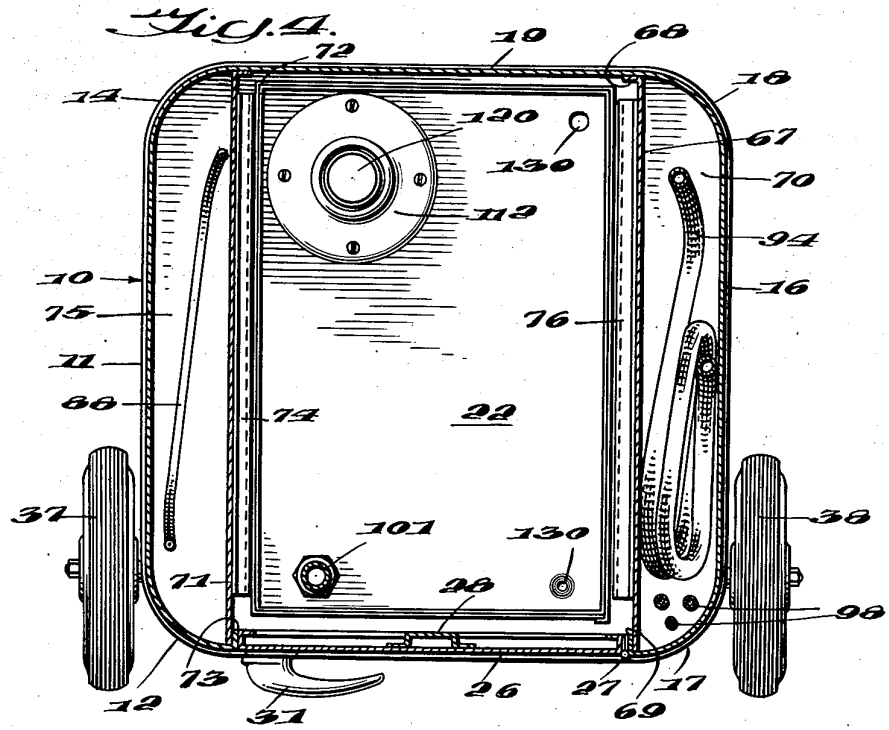

Fig. 5.

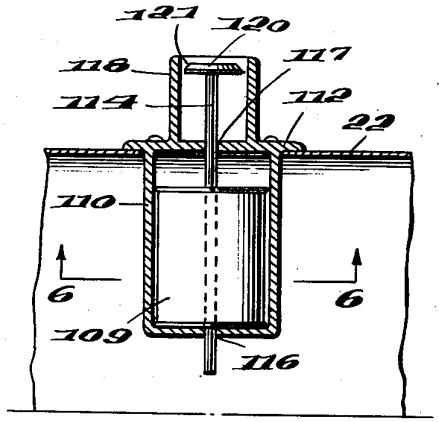

Fig. 6.

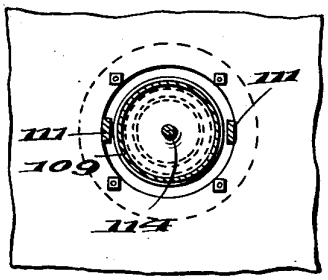

Inventor

MICHAEL A. TABET,

By Floyd P. Blank

Attorney

July 15, 1952 M. A. TABET 2,603,312

APPARATUS FOR WITHDRAWING OIL FROM THE CRANKCASE OF INTERNAL-COMBUSTION ENGINES

Filed Aug. 13, 1948 5 Sheets-Sheet 4

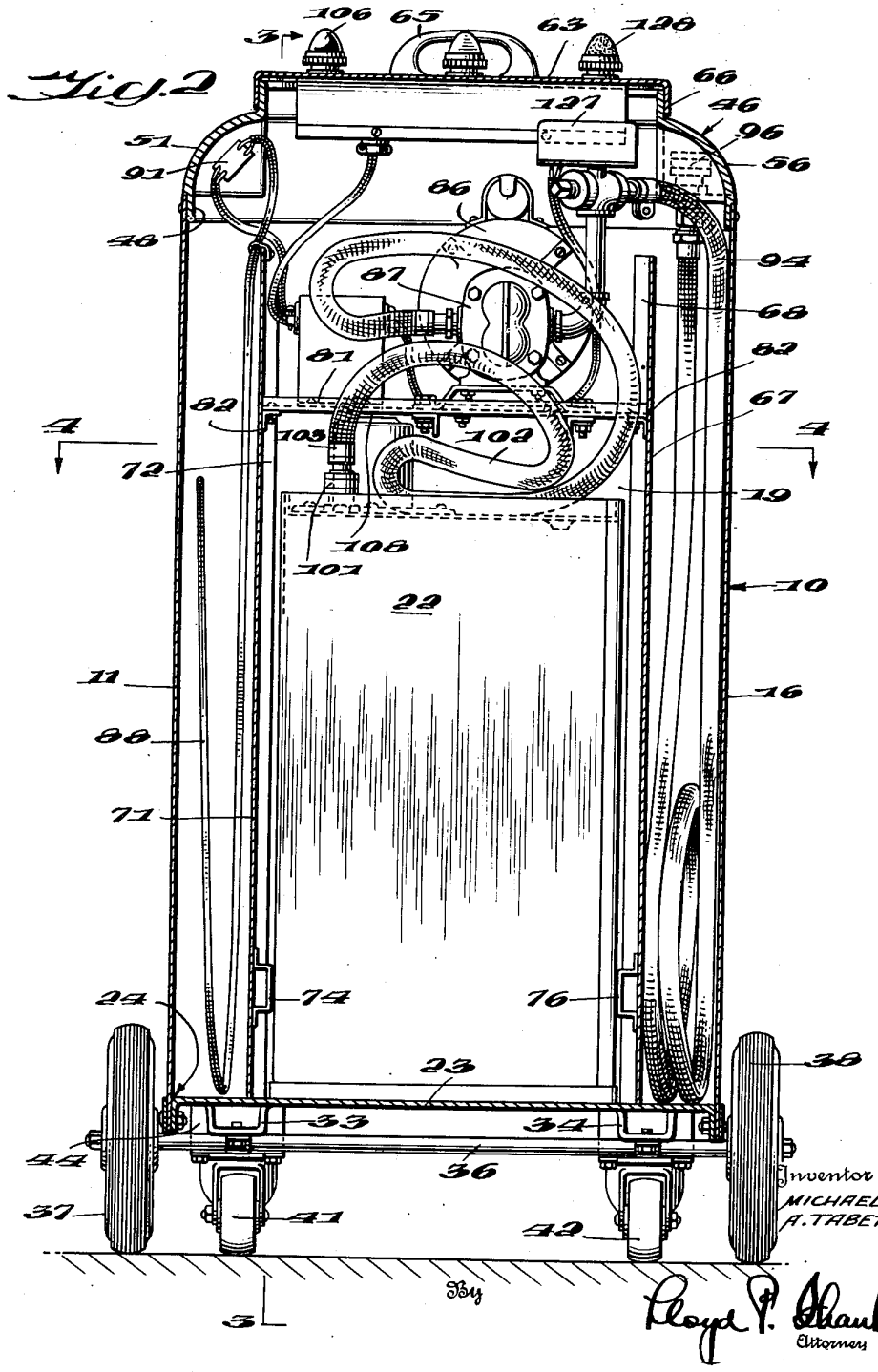

July 15, 1952 M. A. TABET 2,603,312

APPARATUS FOR WITHDRAWING OIL FROM THE CRANKCASE OF INTERNAL-COMBUSTION ENGINES

Filed Aug. 13, 1948 5 Sheets-Sheet 5

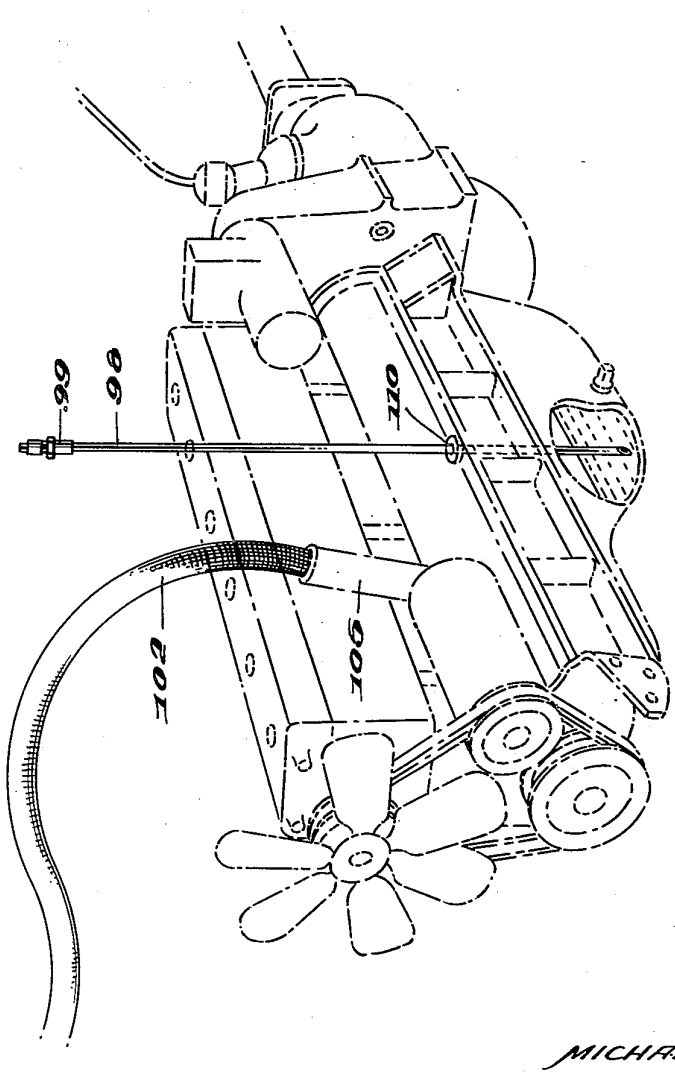

Fig. 7.

Inventor
MICHAEL A. TABET,

By Floyd P. Blank
Attorney

Patented July 15, 1952

2,603,312

UNITED STATES PATENT OFFICE

2,603,312

APPARATUS FOR WITHDRAWING OIL FROM THE CRANKCASE OF INTERNAL-COMBUSTION ENGINES

Michael A. Tabet, Norfolk, Va., assignor to Tabet Manufacturing Company, Incorporated, Norfolk, Va., a corporation of Virginia

Application August 13, 1948, Serial No. 44,033

7 Claims. (Cl. 184—1.5)

1

The present invention relates to apparatus for removing the oil and sludge from the crank case of an internal combustion engine and the invention more specifically pertains to such apparatus in the form of a portable unit which may be moved to a position adjacent a motor vehicle so that the oil and debris may be pumped from the crank case in a matter of approximately a minute without removing the drain plug and without arranging the motor vehicle over a pit or on a lifting rack.

An object of the invention is to provide apparatus in the form of a portable unit which may be employed to pump the oil and sludge from the crank case of an internal combustion engine outwardly through the opening which normally accommodates the measuring stick and to deposit such liquid into a tank carried by the apparatus.

Another object of the invention is to provide such a portable unit with conduit connections which will permit flushing oil to be introduced into the crank case and thereafter pumped outwardly through the measuring stick opening and again supplied to the filling opening of the engine crank case so that the flushing oil will be circulated by the pump to more thoroughly cleanse the crank case and associated parts of the internal combustion engine.

A more specific object of the invention is to provide a portable unit including a tank which is removably mounted within a housing carrying the pump and a motor therefor, including an arrangement for accommodating a plurality of tubes for use in different size measuring stick openings, and a housing structure for enclosing at least one of the flexible conduits connected to the pump and which may be withdrawn from the housing.

A still further and more detailed object of the invention is to provide a novel type float assembly in association with the tank, cooperating with part of the signal means so that the tank may be removed from the housing and reintroduced therein without disturbing any of the parts of the float assembly.

Other objects and features of the invention will be apparent to those skilled in the art as the present disclosure proceeds and upon consideration of the following detailed description wherein a commercial embodiment of the invention is disclosed in connection with the accompanying drawings.

In the drawings:

Fig. 1 is a perspective view of apparatus exhibing the invention and showing the tank in a position removed from the housing.

2

Fig. 2 is a sectional view taken on line 2—2 of Fig. 3.

Fig. 3 is a vertical sectional view taken on the line 3—3 of Fig. 2.

Fig. 4 is a horizontal sectional view taken on the line 4—4 of Fig. 2.

Fig. 5 is a fragmentary sectional view of a portion of the tank as showing the float assembly partly in section.

Fig. 6 is a sectional view taken on the line 6—6 of Fig. 5.

Fig. 7 is a perspective view illustrating the manner in which the pump may be employed to circulate cleansing liquid through the crank case of an engine.

The apparatus herein disclosed represents improvements over the features of my co-pending application, Serial No. 645,762, filed February 6, 1946 which matured as Patent No. 2,552,749, May 5, 1951. The present invention is directed to features of the housing and other improvements in apparatus for removing oil and debris or sludge from the crank case of an internal combustion engine. The invention pertains to a portable unit which may be moved to a position adjacent a motor vehicle in a filling station or to a position adjacent the engine of a bus or truck, and includes a motor driven pump which may be operated to draw the oil, sludge and cleansing liquid from the crank case preparatory to the introduction of a fresh supply of lubricant to the reservoir provided under the crank shaft of most internal combustion engines. The liquid is withdrawn from the crank case through the measuring stick opening and for this purpose a tube is employed at the end of a flexible hose extending from the inlet side of the pump. The tube is of such small diameter as to extend to the bottom of the crank case through the measuring stick opening and the pump may be a gear pump which upon operation with the liquid oil passing therethrough creates a vacuum in the tube extending to the bottom of the crank case amounting to between twenty and twenty eight inches of mercury. This low pressure in the suction line is such as to cause the used lubricant and the sludge or debris in the crank case to move towards the tube and upwardly therethrough and out of the crank case through the measuring stick opening at a rather high velocity and through the pump into a tank carried by the portable unit. The apparatus in actual use has been found to remove more of the sludge and debris from the crank case than is removed by an ordinary draining operation and this advantageous result appears to flow from the re-

latively high degree of vacuum generated in the suction line and by the fact that the oil is removed from the bottom of the sump.

The invention also includes the step of flushing the crank case and in this connection the pump which is employed to withdraw the waste oil is used to circulate the cleansing or flushing liquid through the crank case. The flushing oil is introduced to the crank case through the fill opening after the used oil has been removed, and the hose connected to the discharge side of the pump is then detached from the portable tank and introduced into the fill opening for the crank case. The pump is then employed to withdraw the flushing oil from the crank case through the measuring stick opening and through the pump and reintroduced by force to the crank case through the fill opening. The flushing or cleansing oil is thereby circulated to recover further grit or debris from the crank case receptacle. Finally, the flushing oil is withdrawn from the crank case through the measuring stick opening and through the pump and conveyed through the discharge hose of the pump into the portable tank.

The structural features of the invention and the novel method of cleaning the crank case, will be understood from consideration of the accompanying drawings, wherein the housing is shown generally at **10**. This housing is preferably square shaped in horizontal cross section, as will be evident upon consideration of Fig. 4. It will be appreciated that the housing may be constructed to have other shapes, such as rectangular, and the housing may be formed of any suitable size to accommodate a tank of any capacity found desirable. The side wall **11** of the housing is flat, having rounded corners **12** and **14**. The opposite side wall **16** is also flat and substantially straight, as shown in Fig. 4. This side wall also is provided with round corners at **17** and **18**. The front wall **19** is likewise substantially flat and merges with the rounded corners **14** and **18**. This portion of the cabinet may be formed of sheet metal of a relatively thin gauge but at the same time having sufficient structural strength to carry the parts mounted thereon, as hereinafter described. The rear wall of the cabinet is provided with an opening **21** of such dimensions as to permit a tank shown generally at **22** to be arranged within the housing and to be removed therefrom through the opening **21**. The housing includes a bottom wall **23** on which the tank **22** is supported and this bottom wall may be joined to the side and front walls in any suitable manner such as by means of a flange structure shown generally at **24**. The opening **21** is adapted to be closed by means of a door **26**. This door is mounted for hinged movement to an open position such as shown in Fig. 1, or to a closed position as illustrated in Fig. 4. The door may be provided with a hinge of the continuous type as shown at **27**. The door may be reinforced by means of a channel member **28** welded to the inner face thereof, as shown in Figs. 1 and 4. The door is formed with a bead or flange portion around the perimeter thereof as indicated at **29**, for the purpose of imparting rigidity to the door structure. This bead also facilitates the mounting of one butt of the hinge **27** to the door structure. A latch of any suitable type including a handle **31**, is provided for maintaining the door in the closed position.

The housing is supported for rolling movement by means of a plurality of wheels, and for this

purpose the bottom **23** of the housing carries two bracket members **33** and **34** which may be welded or otherwise secured to the under-surface of the bottom wall **23**. These bracket members **33** and **34** reinforce the bottom wall and provide means for attaching an axle **36** thereto. This axle provides means for journalling two wheels **37** and **38**. These wheels may be provided with suitable treads such as pneumatic or semi-pneumatic tires, formed of a resilient material which will not be attacked by the hydro-carbon types of liquids usually encountered in filling stations and the like. The wheeled support for the housing is completed by means of two casters **41** and **42** which may be bolted or otherwise secured to suitable lugs **44** carried by the bottom wall **23** of the housing. These caster type wheels are of a conventional design but are provided with resilient treads **46** to minimize the noise during movement of the unit. The casters **41** and **42** permit the direction of rolling movement to be altered so that the device may be moved to a position adjacent an internal combustion engine which is to be serviced.

The housing at the top portion is reinforced and partially closed by means of a rigid casting formed in one piece and indicated generally at **46** in the drawings. This top member includes four depending skirt portions, one for each of the side walls, another for the front wall **19**, and another for supporting a panel section **47** at the back of the housing or cabinet above the door opening **21**. This depending skirt is indicated at **48** in Figs. 2 and 3 and is provided with openings for receiving rivets or screws **49** so that the sheet metal side and front walls and the back panel **47** may be securely attached to the skirt portions of the casting **46**. It will be further observed that this top member adjacent the skirt portions has arcuate corners matching the curved corners **12**, **14**, **17** and **18**.

The casting or rigid member **46** curves inwardly from the side wall **11** in proceeding upwardly therefrom to provide an arcuate portion **51** as shown in Figs. 1 and 2. This arcuate surface terminates short of the front wall **19** and short of the rear panel **47** to provide two recesses, one of which is clearly shown at **52** in Fig. 1. The other recess **53** is provided over the corner **14** of the housing. A similar arcuate surface **54** is provided along the front of the casting **46** as shown in Fig. 3. This rounded surface terminates short of the side walls **11** and **16** to complete the recess **53** and to provide a similar shaped recess **55** over the rounded corner **18** of the housing. A further arcuate portion **56** is provided above the side wall **16** as shown in Fig. 2. This arcuate portion **56** terminates short of the front wall **19** and the rear panel **47** to provide a recess **57** over the rounded corner **17** and to complete the recess **55**. A fourth arcuate surface on the casting **46** at the back of the cabinet is shown at **59** and terminates short of the side walls **11** and **16** to complete the recess **52** and **57**. All of these recesses at the corners of the casting **46** are defined by substantially vertical walls and substantially horizontal bottom walls. The purpose of these recesses will be more apparent as the present disclosure proceeds.

The rigid top member **46** is provided with two openings **61** for receiving the legs of a U-shaped handle **62**. This handle may be formed of tubular material such as stainless steel, and the leg portions fit snugly within the openings **61**. These legs may be welded to the casting, or provided with set screws (not shown) for maintaining the

handle in operative association with the cabinet structure. The handle 62 is thereby arranged at the back of the device and this element serves as means for manually moving the unit on the wheels and casters.

The rigid member 46 is provided with a substantially square opening through which access may be gained to the interior of the housing. This opening is closed by means of a lid 63 which is hinged at 64 to the casting 46. A handle 65 may be secured to the lid 63. A depending flange 66 is provided along the perimeter of the lid which overhangs a vertical flange formed around the top portion of the casting 46. Resilient gaskets or resilient pads (not shown) may be provided to prevent chattering and to reduce the noise when the lid is closed.

The housing or cabinet structure includes a partition 67 spaced from the side wall 16 and arranged substantially parallel with the flat portion thereof. This partition may be provided with a flange 68 at its forward edge which may be welded or otherwise secured to the front wall 19 of the housing. The partition 67 terminates at the rear edge adjacent the door opening 21 and may be secured to this part of the housing and to a flange 69 formed integral with the curved corner portion 17. The partition 67 may be welded to the flange 69. This partition extends from the bottom wall 23 upwardly to a point adjacent the top of the side wall 16 and provides a rather large space or compartment 70 within the cabinet. A similar partition 71 is provided on the opposite side of the tank 22 and may be welded to the front wall 19 along a flange 72. This partition 71 is also joined to the rear part of the cabinet adjacent the arcuate portion 12 by means of a flange 73 as shown in Fig. 4. The partition 71 is spaced from the side wall 11 and provides a compartment 75 between the partition 71 and the side wall 11. The partition 71 carries a horizontally arranged channel member 74 on its inner face which may be welded thereto and which provides a guide for the tank 22. This channel member reinforces the sheet metal partition 71 and provides an abutment for preventing lateral shifting of the tank 22. A similar horizontally arranged channel member 76 is provided on the inner surface of the partition 67. This channel member 76 may be welded to the partition and cooperates with the other abutment 74 to provide guide means for the tank 22 during the insertion and withdrawal thereof into and from the housing.

A platform 81 is mounted within the housing near the top thereof. This platform may take the form of a plate mounted on angle brackets 82 welded respectively to the partitions 67 and 71. The platform or plate 81 may be secured to these angle brackets in any suitable manner such as by means of bolt and nut assemblies 84. A motor 86 is mounted on the platform and drives a pump 87 of the gear type. The shaft of the motor may be connected to the shaft of the pump through a suitable flexible coupling and it is within the contemplation of the invention to mount the pump directly on the motor itself.

The motor 86 is supplied with electric current through a cable 88 provided with a male type connector 89 at the end thereof, as shown in Fig. 1. This cable 88 extends through an opening provided in the horizontal bottom wall of the recess 52 and into the compartment 75 provided between the partition 71 and the side wall 11. This compartment provides a space for accommodating coiling or an indiscriminate arrangement of

a rather long length of cable 88 so that this conductor may extend to a suitable source of supply. The cable 88 is connected to a switch 91 having an operating handle 92. This switch is mounted on one of the vertical walls which define the recess 53 in the corner of the casting 46. The switch operating handle 92 extends through the wall of the casting and may be manipulated from a position outside the housing. The recess and adjacent portions of the casting shield the operating handle 92 and prevent damage thereof, or inadvertent manipulation of this main operating switch. The cable and suitable electrical conductors extend from the switch 91 to the motor and other parts of the electrical system. The closure of the switch 91 provides for energization of the motor 86 to drive the pump 87.

A hose or flexible conduit 94 is connected to the inlet side of the pump and this hose is constructed of a material which will not be attacked by lubricating oils or the like. The hose 94 extends into the space or compartment 70 between the partition 67 and the side wall 16, and will coil itself therein somewhat in the manner as illustrated in Figs. 2 and 4. This rather long length of hose permits the unit to be positioned at some distance from the internal combustion engine and the hose may be withdrawn from the compartment 70 at the side of the cabinet. The free end of the hose extends through an aperture in the horizontal wall of the top member 46 which forms a part of the recess 55 arranged above the arcuate corner 18 of the housing. The free end of the hose 94 is provided with a female coupling member 96, as shown in Figs. 1 and 2. This coupling part 96 is adapted to nestle within the recess 55 as shown in dotted lines in Fig. 2 and is sufficiently large to prevent the free end of the hose 94 passing downwardly through the aperture. It will be understood that the hose may be withdrawn through the aperture in the bottom wall of the recess 55.

The bottom wall of the recess 57 is provided with a plurality of apertures. In the embodiment illustrated these apertures each accommodate a tube 98 which is adapted to be inserted in the measuring stick opening 110 of the crank case. These tubes may be of various sizes and are shown in Figs. 1 and 4. Each of the tubes 98 is provided with a male coupling part 99 which is adapted to fit into the female coupling member 96 and at the same time provide a vacuum tight connection between the hose 94 and anyone of the tubes 98. These tubes depend into the compartment 70 between the partition 67 and the side wall 16. The male coupling parts 99 are somewhat larger in dimension than the apertures in the bottom wall of the recess 57 so that these tubes and the male coupling parts 99 are nestled in the recess 57 where they do not protrude materially beyond the outline of the cabinet.

The tank 22 is generally rectangular shaped in cross section and is provided with a female coupling member 101 which may be attached to the top wall of the tank and communicating with the interior thereof. A flexible hose 102 extends from the outlet side of the pump 87 and is provided with a male coupling part 103 at the free end thereof. Thereby the hose 102 may be detached from the tank 22. The hose 102 is of greater length than is necessary to provide a conduit connection between the discharge side of the pump and the tank 22. This unusual length is provided for the purpose of disconnecting the free end of the hose 102 from the tank

and inserting this end, including the male coupling part 103, in the fill opening 105 of an internal combustion engine such as shown in Fig. 7. This rather long length of the hose 102 may be accommodated between the top of the tank 22 and the platform 81 when the apparatus is being used solely for withdrawing liquid from the crank case into the tank 22.

Another feature of the apparatus includes means for indicating that the tank 22 is filled with liquid and requires emptying or replacement. A signal lamp 106 is provided on the lid 63 which is illuminated when the tank 22 is filled. A circuit is closed to this lamp 106 by means of a switch (not shown) encased within a conduit box 107 (Fig. 3). This switch is actuated to a closed position when a pin 108, shown in Fig. 2, is moved upwardly. The tank 22 is provided with a float 109. This float is mounted for vertical movement in a one-piece casting which includes a cage 110 having legs 111 which extend downwardly from a disc-shaped top 112. This disc 112 is bolted or otherwise secured to the top wall of the tank 22 in a leak-proof manner. The float 109 carries a stem 114 which is guided for vertical movement in an opening 116 in the cage member and an opening 117 in the central portion of the top 112. A ferrule 118 surrounds the upper portion of the stem 114 to prevent damage to this portion of the float assembly. A disc 120 is mounted on the upper end of the stem 114 and is adapted to engage the pin 108 and move this pin upwardly to close the switch and energize the lamp 106 when the tank 22 is substantially full. A feature of the invention pertains to providing a bevelled edge 121 on the disc 120 so that the tank 22 may be inserted in the housing or cabinet even when substantially full, without having the edge of the disc 120 engage a shank portion of the pin 108. In other words, the bevelled edge 121 engages the pin 108 and cams this pin slightly upward as the tank is moved into position in the cabinet.

In the operation and when it is desired to remove dirty or used oil from the crank case of an internal combustion engine, the portable unit is rolled into position adjacent the engine. The cable 88 is withdrawn from position within the compartment 75 at the side of the partition 71 and this operation is facilitated since the male plug attachment 89 is nestled within the recess 52. The male plug is then introduced into a conventional female socket providing a supply of electrical energy to the switch 91. A tube 98 is then selected and may be withdrawn from a position within the compartment 70 at the side of the partition 67. The male coupling part 99 is then ready for insertion in the female coupling member 96. In this connection it is to be noted that the free end of the hose 94 may be withdrawn from the recess 55 since the female coupling part 96 remains in a position to be readily grasped by the operator. With one of the tubes 98 in vacuum tight association with the hose 94 this tube may be introduced into the measuring stick opening 110 of the engine and moved downwardly therein to the bottom of the crank case after the measuring stick has been removed. The switch handle 92 is then actuated to supply current to the motor 86. The pump is thereby operated to create a vacuum or lowered pressure within the hose line 94 amounting to between twenty and twenty-eight inches of mercury. This vacuum moves the oil and sludge

from the crank case through the measuring stick opening and the hose 94, through the pump 87 and through the discharge hose 102, into the tank 22. After the oil has been exhausted from the crank case, the vacuum in the suction line no longer prevails and the pressure therein rises. A pressure responsive switch, shown generally at 127, is provided for interrupting the supply of current to an indicating lamp 128, thereby showing that the crank case has been exhausted of liquid.

If it is desired to further cleanse a crank case, flushing oil may be introduced through the fill opening 105. The hose 102 may then be disconnected from the tank 22 by removing the male coupling part 103 and introducing this end of the hose in the fill opening 105 of the engine. The pump 87 will then serve to withdraw the flushing oil and return this flushing oil to the crank case through the hose 102. The pump may be used to circulate the cleansing oil through the oil passages of the motor to further pick up any particles of grit in the flushing oil. The hose 102 may then be returned to its connection on the tank 22 whereby, upon further operation of the pump, the flushing oil may likewise be withdrawn from the crank case.

A further feature of the invention pertains to employing the pump 87 to empty the tank 22. In this connection the tank 22 is provided with an opening 130 in the top thereof through which one of the tubes 98 may be inserted to the bottom of the tank 22. Thereafter, when the pump 87 is operated and with the hose 102 disconnected from the tank 22 and arranged to discharge the oil to waste, the tank 22 may be pumped dry. An indication when the tank 22 is full may be obtained when the light 106 is energized. This is brought about by the float 109 being buoyed upwardly to move the pin 108 to switch closing position.

The present method of removing oil and sludge from the crank case of an internal combustion engine has been found to remove more of the sludge than that of the conventional method of draining the crank case by removing a plug provided in the lower part of the crank case. The tube, such as 98 shown in Fig. 7, extends to the very bottom of the crank case and to the lowermost point of the sump. The oil and sludge along the bottom of the crankcase first moves toward the open end of the tube 98 and at a relatively high velocity, since the vacuum produced by the pump in a suction line amounts to approximately twenty eight inches of mercury and often goes as high as twenty nine inches of mercury particularly if the oil and sludge has coated the teeth of the gear pump. The oil moving along the bottom of the crank case carries more sludge outwardly than is removed by draining. In carrying out a conventional draining operation by removing the plug in the bottom of the crank case the top layer of the oil first moves toward the drain opening so that this relatively slow current of oil does not tend to remove any appreciable quantity of the sludge or debris which usually lies along the bottom of the crank case.

The tubes, such as 98, are approximately twenty six inches in length and the conduit 94 has a length approximately seven feet. This relatively long suction line provides sufficient length to conveniently service all makes of motor vehicles wherein the measuring stick opening and the crank case are often positioned quite a distance below the hood opening. After teeth of the

gear pump become coated with the sludge and oil so as to promote sealing contact during meshing of the teeth of the gear pump the vacuum produced amounts to approximately twenty eight inches of mercury and at this pressure four or five quarts of oil and sludge are removed through the relatively long suction line in a matter of approximately one minute. The gear pump provides the unobvious result of providing a vacuum in the suction line amounting to approximately twenty eight inches of mercury when the gear teeth are coated with a film of sludge and oil. It will be appreciated that this is an unusually high vacuum for a gear pump which in the dry condition will produce a vacuum corresponding only to about five inches of mercury.

While the invention described with reference to specific structural features, and with regard to particular organizational arrangement, it will be appreciated that changes may be made in the various elements and in the overall organization. Such changes and others may be made without departing from the spirit and scope of the invention as set forth in the appended claims.

What I claim and desire to secure by Letters Patent is:

1. Apparatus for removing liquid from the crankcase of an internal combustion engine comprising, a housing including side walls, wheels supporting said housing for rolling movement, a door closing an opening in one side wall of said housing, a tank within the housing removable through said door opening, a platform mounted within the housing above said tank, a pump mounted on said platform, a motor supported on said platform driving said pump, a flexible conduit extending from a discharge side of said pump and detachably connected to said tank, a rigid member having recessed corners forming a part of the top of said housing, a flexible tube extending from the input side of said pump through an opening arranged in one recessed corner of said rigid member, a coupling member carried by the end of said flexible tube beyond said rigid member, and a tube adapted to be inserted through a measuring stick opening of the crankcase arranged to fit within said coupling member.

2. In apparatus for removing liquid from the crankcase of an internal combustion engine, a portable housing, a tank within the housing, a platform mounted within the housing above said tank, a pump mounted on said platform, a motor mounted on said platform driving said pump, a flexible conduit extending from a discharge side of said pump detachably connected to said tank, a rigid member having a recessed corner forming a part of the top of said housing, a flexible tube extending from the input side of said pump through an opening in said recessed corner, a coupling member carried by the end of said flexible tube beyond said rigid member so as to normally nestle in said recessed corner, said coupling member being larger than the opening in said recessed corner and small enough to be shielded by portions of the rigid member adjacent the recess.

3. In apparatus for removing liquid from the crankcase of an internal combustion engine, a sheet metal housing including side walls and generally rectangular shaped in cross section, a tank within the housing receiving liquid from the crank case, a partition within the housing between one of the side walls and said tank, another partition within the housing between the other side wall and said tank, a platform carried by said partitions above the tank, a pump mounted on said platform, a motor mounted on said platform for driving the pump, a rigid member forming part of the top of the housing having recessed corners, an electrical cable extending from the motor into a space between one partition and a side wall of the housing, said cable extending through an opening in a recessed corner of said rigid member, an electrical fitting carried by the end of the cable adapted to be arranged in said recess, and said electrical fitting having a larger cross section than the opening in the recessed corner.

4. In apparatus for removing liquid from the crank case of an internal combustion engine, a housing including side walls and generally rectangular shaped in cross section, a tank within the housing receiving liquid from the crank case, a partition within the housing between one of the side walls and said tank and spaced from said side wall, a platform mounted above the tank, a pump mounted on said platform, a motor mounted on said platform for driving the pump, a top member for the housing having a recessed corner, an electrical cable extending from the motor having an appreciable length adapted to be arranged between said partition and said side wall, said cable extending through an opening in the recessed corner of said top member, and an electrical fitting carried by the end of the cable adapted to nestle in said recess, so as to be shielded by portions of the top member adjacent the recess.

5. In apparatus for removing liquid from the crank case of an internal combustion engine, a housing including side walls and generally rectangular shaped in cross section, a tank within the housing for receiving liquid from the crank case, a partition within the housing between a side wall and said tank and spaced from said side wall, a platform above the tank, a pump mounted on said platform, a motor mounted on said platform for driving the pump, a top member for the housing having recessed corners, an electrical cable extending from the motor into a space between the partition and the side wall, said cable extending through an opening in one recessed corner of said top member, an electrical fitting carried by the end of the cable adapted to nestle in said recess, a switch mounted in the other recess of the top member for controlling the supply of current through said cable, and an operating member carried by the switch shielded by portions of the top member adjacent the last recess.

6. In apparatus for removing liquid from the crank case of an internal combustion engine, a housing including side walls and generally rectangular shaped in horizontal cross section, a tank within the housing for receiving liquid from the crank case, a partition within the housing along one wall of the tank and spaced from a side wall of the housing, a platform above said tank, means including said partition supporting said platform, a pump mounted on the platform, a motor on the platform for driving said pump, a top member for the housing covering the space between the partition and the associated side wall, said top member having a recessed corner therein, a flexible conduit extending from an inlet side of the pump into the space between said partition and said housing side wall, said top member having an opening in the recess with said flexible conduit extending therethrough, and a detachable coupling member secured to the end of said

flexible conduit and normally nestled in said recess.

7. In apparatus for removing liquid from the crankcase of an internal combustion engine, a portable housing including side walls, one of said side walls having an opening therethrough; a tank within the housing removable through said opening, vertically disposed partitions spaced from opposite side walls of the housing and arranged along the sides of said tank, a platform mounted within the housing and in part supported on said partitions, a motor driven pump mounted on said platform, a flexible conduit extending from a discharge side of said pump and detachably connected to said tank, a top member for the housing arranged above said pump, a flexible tube extending from an input side of said pump in a compartment between one partition and a side wall and through an opening arranged in one corner of said top member, a coupling member carried by the end of the flexible tube beyond said top member, and a tube adapted to be inserted through a measuring stick opening in the crankcase of an internal combustion engine arranged to fit within said coupling member.

MICHAEL A. TABET.

REFERENCES CITED

The following references are of record in the file of this patent:

UNITED STATES PATENTS

Number	Name	Date
1,049,331	Bowser	Jan. 7, 1913
1,574,129	Smith	Feb. 23, 1926
1,635,115	Deutsch et al.	July 5, 1927
1,659,019	Collier	Feb. 14, 1928
1,696,100	Osborne	Dec. 18, 1928
1,824,095	Oles	Sept. 22, 1931
1,878,901	Smellie	Sept. 20, 1932
1,884,820	Osborne	Oct. 25, 1932
1,955,169	Bertschinger	Apr. 17, 1934
2,014,329	Hellmann	Sept. 10, 1935
2,020,350	Bertschinger	Nov. 12, 1935
2,054,205	Palmer	Sept. 15, 1936
2,059,133	Merritt	Oct. 27, 1936
2,184,363	Schultz et al.	Dec. 26, 1939
2,275,189	Wieghart	Mar. 3, 1942
2,338,303	Rosenberg	Jan. 4, 1944
2,366,073	Vallerie	Dec. 26, 1944
2,432,290	Davis	Dec. 9, 1947
2,477,450	Gray	July 26, 1949