APPARATUS FOR CHANGING CRANKCASE OIL

Filed Feb. 1, 1963 6 Sheets-Sheet 1

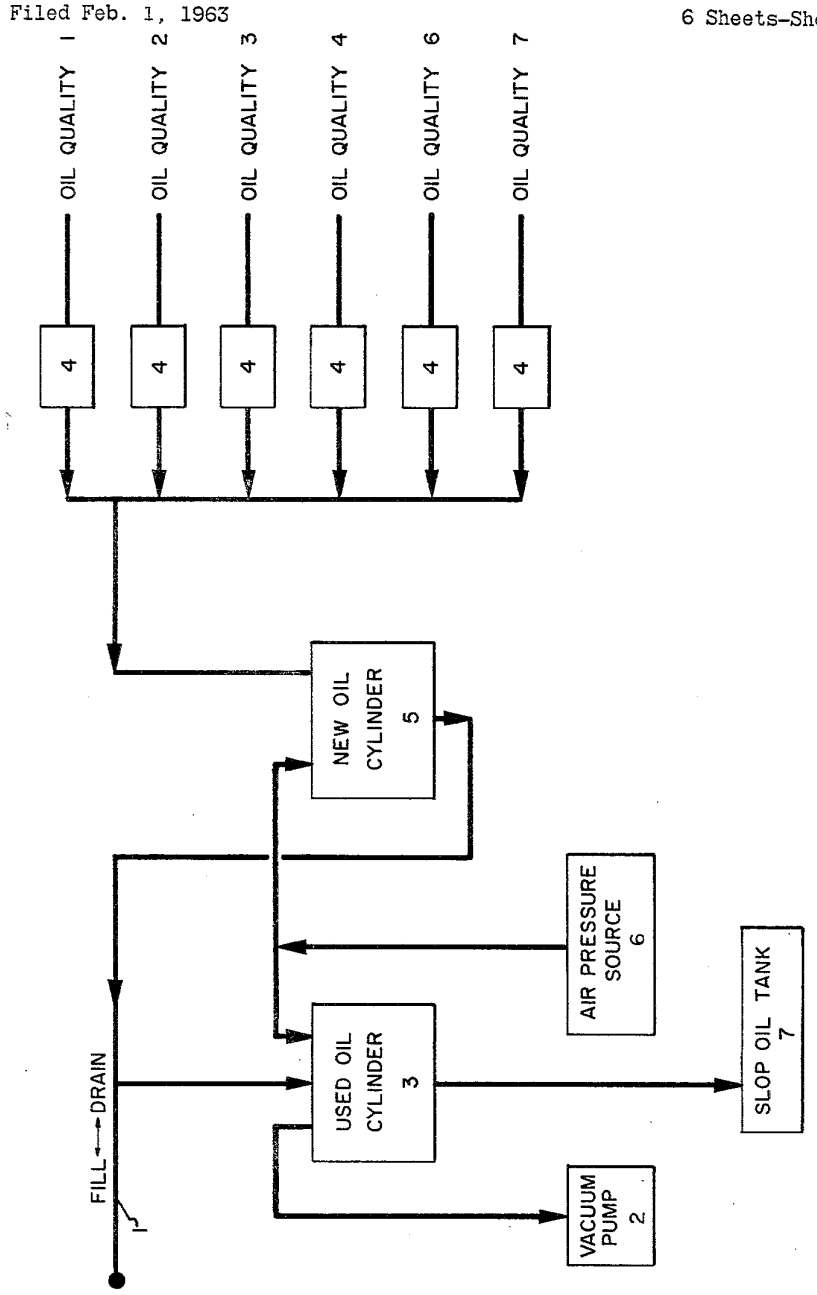

FIGURE 1

Oliver G. Lewis Inventor

By Cecil C. Schmidt
Agent

APPARATUS FOR CHANGING CRANKCASE OIL

Filed Feb. 1, 1963 6 Sheets-Sheet 2

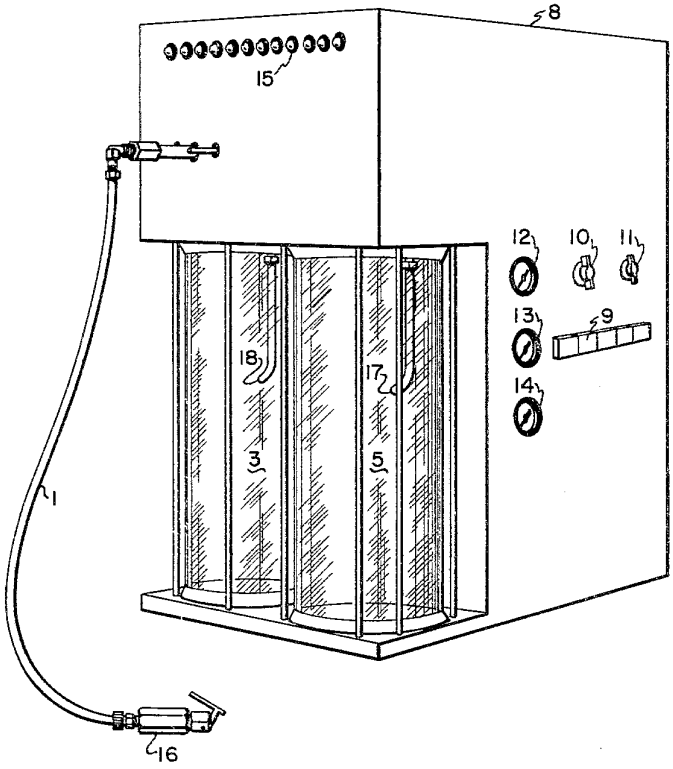

FIGURE 2

Oliver G. Lewis Inventor

By Cecil C. Schmidt
Agent

APPARATUS FOR CHANGING CRANKCASE OIL

Filed Feb. 1, 1963 6 Sheets-Sheet 3

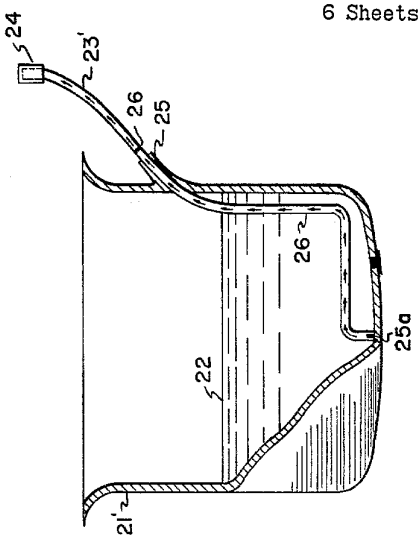

FIGURE 5

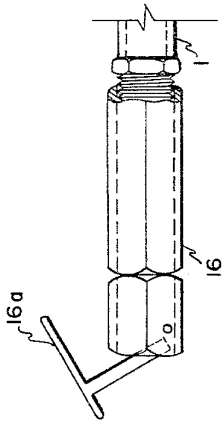

FIGURE 3

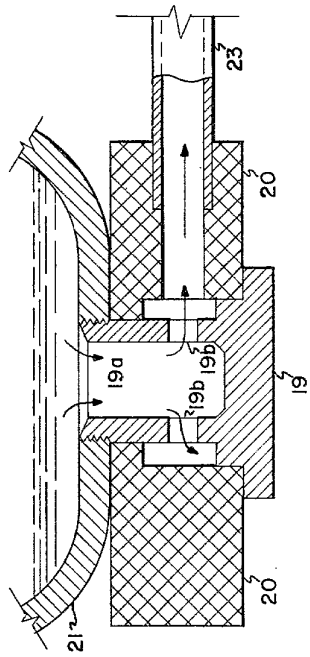

FIGURE 4

Oliver G. Lewis Inventor

By Cecil C. Schmidt
Agent

APPARATUS FOR CHANGING CRANKCASE OIL

Filed Feb. 1, 1963 6 Sheets-Sheet 4

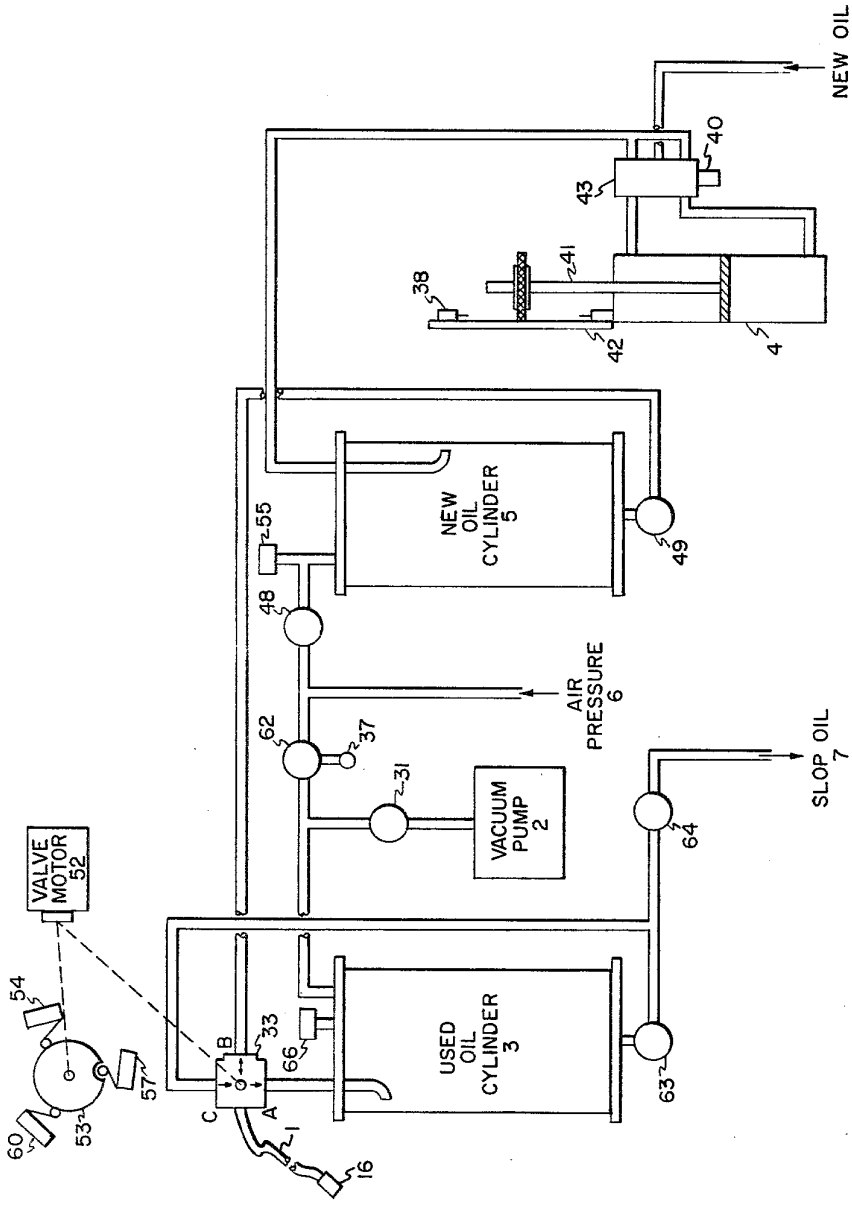

FIGURE 6

Oliver G. Lewis Inventor

By Cecil C. Schmidt
Agent

APPARATUS FOR CHANGING CRANKCASE OIL

Filed Feb. 1, 1963 6 Sheets-Sheet 5

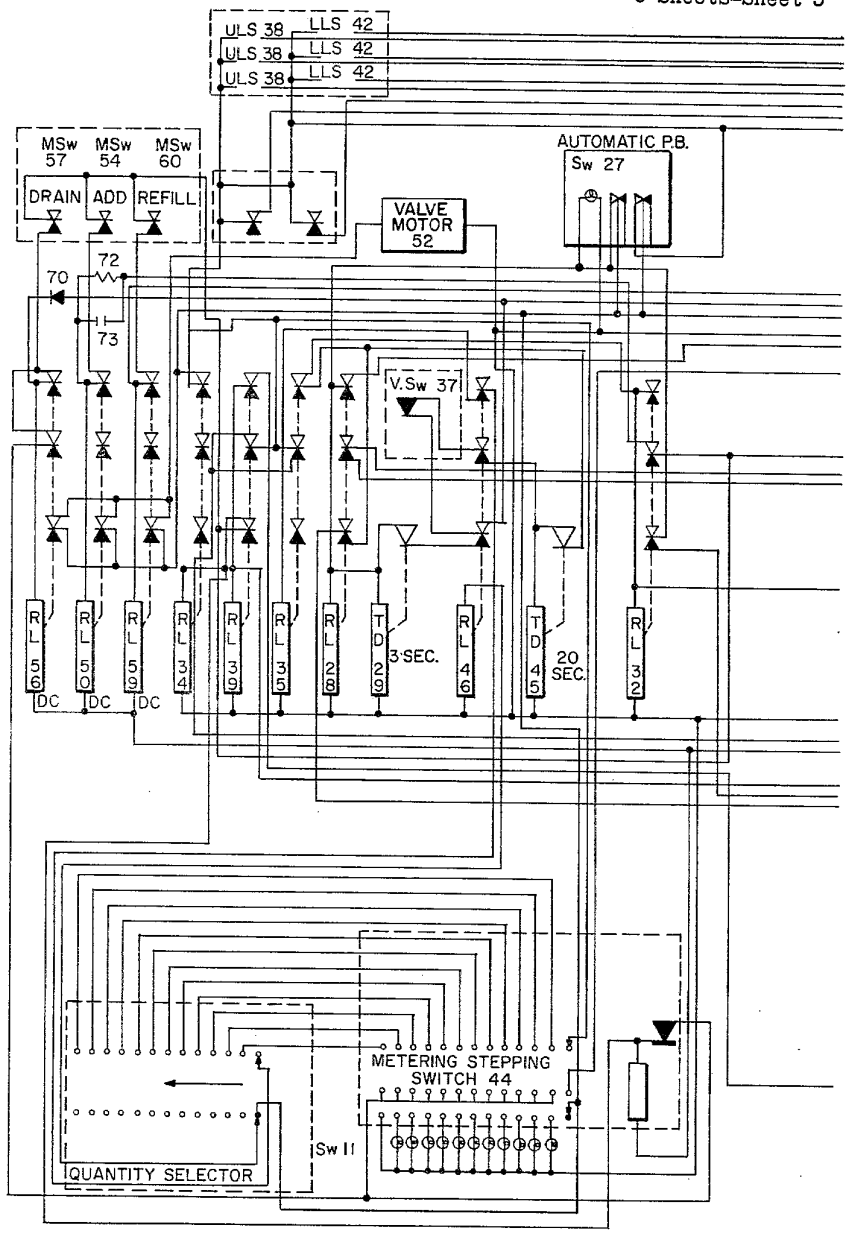

FIGURE 7

Oliver G. Lewis Inventor

By Cecil C. Schmidt
Agent

APPARATUS FOR CHANGING CRANKCASE OIL

Filed Feb. 1, 1963 6 Sheets-Sheet 6

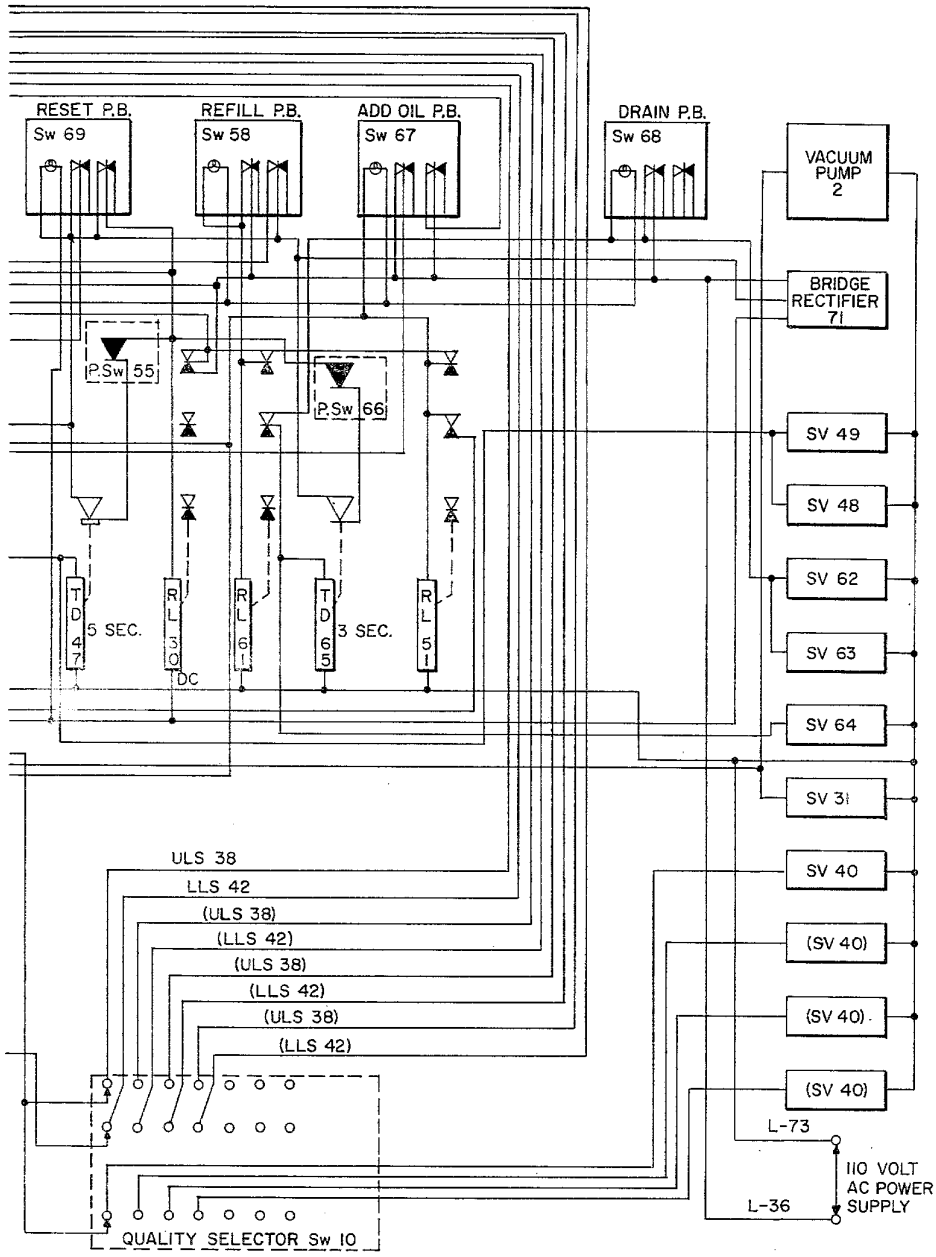

FIGURE 8

Oliver G. Lewis Inventor

By Cecil C. Schmidt
Agent

United States Patent Office

3,216,527

Patented Nov. 9, 1965

3,216,527
APPARATUS FOR CHANGING CRANKCASE OIL

Oliver G. Lewis, Westfield, N.J., assignor to Esso Research and Engineering Company, a corporation of Delaware

Filed Feb. 1, 1963, Ser. No. 255,594
5 Claims. (Cl. 184—1.5)

This application is a continuation-in-part of my copending application Serial No. 230,868, now abandoned, filed October 16, 1962.

This invention relates to a method and apparatus for draining used lubricating oil from a lubricant holding case and for subsequently adding new oil to said case.

THE PROBLEM

The conventional method for replacing used oil in the crankcase of an internal combustion engine mounted in a motor vehicle is to first drive the vehicle, e.g., automobile, onto a hydraulic lift and elevate it to a height several feet above the ground. It is then necessary for a mechanic to crawl or walk under the automobile and remove the drain plug presently used to close the bottom of the crankcase. The oil is allowed to flow from the crankcase into a suitable receptacle. The drain plug is then manually replaced and the automobile lowered. The cap on the crankcase fill pipe is removed and a pre-selected quantity and quality of new motor oil is manually added to the crankcase via the fill pipe. This conventional method for replacing used oil in the crankcase of an internal combustion engine has numerous disadvantages, including the requirement for a hydraulic lift or oil pit, the length of time required, the possibility of cross-threading the drain plug, the length of time that an operator's presence is required, and the accompanying mess. More importantly, conventional draining techniques leave a sizable quantity of oil remaining in the crankcase. Because conventional draining is incomplete, sludge and foreign particles often remain in the crankcase.

Numerous attempts have been made to develop suitable devices for draining used oil from the crankcases of motor vehicles but none have been entirely successful.

These prior art devices, each an apparent advance in the art at their particular point in time, are represented by the following U.S. patents: Nos. 1,609,697; 1,659,019; 1,666,992; 1,815,221; 1,841,505; 1,886,098; 1,962,623; 2,105,761; 2,216,360; 2,206,992; 2,477,450; 2,552,749; 2,603,312; 2,612,289; and 2,635,550.

These previous attempts at oil removal suffered from various deficiencies. In some cases, the amount of equipment (and cost thereof) to be permanently attached to each automobile was prohibitive. Some devices were so complex that even though they had some definite advantages they were not commercially accepted because it was easier for the service station attendant to perform the old manual draining techniques. Still other devices were so bulky and expensive that they were not acceptable. Moreover, most of these devices only drained the oil and manual techniques still had to be employed to add new oil.

An added difficulty in developing a device to be used in commercial service stations is that automobile owners are ultra-conservative. They are so accustomed to the practice of having the used oil drained from their automobile engines through the drainage outlet in the bottom of the crankcase that the vast majority are skeptical of the ability of any device to effectively remove the used oil from the crankcase. Most customers want to know that the oil has been removed and they want to decide this fact for themselves. They normally will accept the word of a mechanic or the indication of a machine, unless they can actually watch the oil removal being performed.

THE INVENTION

A method and apparatus for overcoming many of the deficiencies of the prior art systems has now been discovered. The present invention involves broadly the method and apparatus for automatically withdrawing used oil from the crankcase of an internal combustion engine by suction and automatically adding new oil, under pressure, to the crankcase. The apparatus is designed so that the customer has a visual indication of the condition of the used oil which has been removed from his automobile. An additional feature of the present invention resides in the fact that the apparatus is further designed to give the customer a visual indication of the quantity and quality of the new oil which is to be added to the crankcase of his automobile. These two visual means are so located that the customer can visually compare the quantity and quality of the new and used oils. By electronically actuating the apparatus, the used oil can be withdrawn from the crankcase, new oil can be measured out, a visual comparison made by the customer between the new and the used oil, and the new oil can be automatically added to the crankcase. A feature of the present invention which is of considerable importance is that the cycle of the draining and filling operations, as well as the degree of drainage, is controlled by the apparatus and cannot be altered by the operator except through limited controls.

The present device is thought to be unique in that it is compact (much smaller than a conventional gasoline pump), easy to operate, is extremely fast, is not prohibitively expensive, is essentially trouble free, and requires the permanent installation of a very minor amount of inexpensive equipment on the motor vehicle itself. Moreover, these minor changes to the vehicle are easily incorporated during the original manufacturing process at a nominal cost.

The present invention will be more clearly understood by reference to the following detailed description taken in connection with the accompanying drawings in which:

FIGURE 1 is a block diagram of the electronic oil changer of the present invention,

FIGURE 2 is a right perspective view of an electronic oil changer constructed according to the teachings of the present invention,

FIGURE 3 is a side view of a connecting device which can be used to connect the flexible hose of the electronic oil changer to an oil evacuation tube,

FIGURE 4 is a front view, partly in section, of a crankcase having a drain plug type evacuation tube installed thereon,

FIGURE 5 is a front view, partly in section, of a crankcase having a wall-type evacuation tube installed thereon,

FIGURE 6 is a diagrammatic view of the oil changer of the present invention and

FIGURES 7 and 8, taken together, are a schematic diagram of the control system of a preferred embodiment of the present invention.

GENERAL DESCRIPTION AND OPERATION

Referring now to FIGURE 1, the hood of an automobile (not shown), for example, is raised and a flexible hose 1, attached to the electronic oil changer, is then placed in communication with the lower reaches of the automobile crankcase in a manner as will be later described. The service station attendant then selects the quantity and quality of the new oil to be charged into the engine. This is done through dials located on the

control panel (not shown) of the electronic oil changer. The attendant may then, for example, depress a button (not shown) on the electronic oil changer marked "automatic." In the electronic oil changer, a vacuum is produced in the transparent used oil cylinder **3** by some convenient means (e.g., electric vacuum pump **2**). This vacuum draws the used oil from the crankcase (not shown) through flexible hose **1** into the transparent used oil cylinder **3** where the customer may see it. Meanwhile, the previously selected quality and quantity of new oil is being automatically metered by an automatic metering device **4** (e.g., constant displacement cylinder) into a second transparent cylinder (new oil cylinder **5**) where the customer may make a direct comparison between the sparkling new oil and his dirty used oil. It should be realized that once the oil quality, e.g., oil quality #3, has been selected only its corresponding metering device **4** will be in operation. The metering devices related to the other oil qualities will be idle. The quantity metered out by the automatic metering device **4** may be in increments of one pint or less if desired.

By the term "vacuum" as used throughout this specification, it is intended that zero inches of Hg will correspond to no vacuum at all (normal atmospheric pressure) and that a vacuum of 29.92 inches of Hg corresponds to a perfect vacuum, i.e., zero p.s.i.a. Thus a reduction in vacuum is intended to denote an increase in absolute pressure.

As the major portion of the used oil is drawn from the crankcase (not shown) by the vacuum, air is drawn into the used oil cylinder **3** from the crankcase and rapidly reduces the vacuum within used oil cylinder **3**. This sudden burst of air from the crankcase through flexible hose **1** into used oil cylinder **3** is effective in removing bits of foreign materials from the crankcase, e.g., sand, metal chips, etc. As the vacuum drops to a predetermined level of from 2 to 12 inches Hg, e.g., 4 to 10 inches Hg, a timing cycle starts and allows a number of seconds, usually from 10 to 60 seconds, e.g., 15 to 30 seconds, of continued pumping to collect the remaining oil from the crankcase. It is to be noted that this timing cycle does not start until the major portion of the used oil has been withdrawn from the crankcase and the final volume of used oil remaining in the crankcase is not, therefore, dependent on the temperature and viscosity of the oil or the total quantity of oil to be removed. As soon as the timed cycle has been completed, thus indicating the oil removal cycle to be complete, the electronic oil changer will automatically cause the new oil to be forced from the new oil cylinder **5** into the crankcase via the flexible hose **1** without further attention from the operator. This addition of new oil to the crankcase is done by means of air pressure from source **6**. Suitable valves will prevent the entry of new oil into used oil cylinder **3**. After the new oil has been delivered to the crankcase, the system will automatically eliminate the used oil from used oil cylinder **3** into a suitable receptacle (slop oil tank **7**) by means of air pressure from source **6** and then shut off. Indicator lights may be mounted on the electronic oil changer to show the customer the quantity and quality of oil charged to the engine.

If desired, the electronic oil changer may be set, e.g., by dialing zero quantity of new oil, to remove used oil and then stop after the used oil has been removed. At this point new oil may be selected and added to the crankcase or, if desired, the used oil may be returned to the engine merely by pressing a "Refill" button on the control panel.

FIGURE 2 is a right perspective view of a portable electronic oil changer that has been constructed according to the present invention. The cabinet **8** houses the necessary relays, vacuum pump, constant displacement pumps for metering new oil, wiring, etc. Transparent cylinders **3** and **5** are employed for used oil and new oil respectively and may have a capacity of from 6 to 12 quarts or more. Use of these cylinders is contemplated where individual customer appeal is required. When captive customers are encountered (taxi fleets, etc.) they are not needed. The control switches **9** are used to signal the electronic oil changer to drain the used oil, to add new oil, to refill the crankcase with the used oil that has been previously withdrawn, to operate automatically, or to reset the entire apparatus. Dial **10** is used to select the quality of the new oil, i.e., grade of oil, and dial **11** is used to select the quantity of new oil to be measured out into new oil cylinder **5** prior to being added to the crankcase. Pressure gage **12** indicates the pressure, e.g., air pressure, used to force the new oil into the crankcase from new oil cylinder **5** during the filling operation. This pressure will usually be from 20 to 100 p.s.i.g., although other pressures may be used, e.g., 40 to 80 p.s.i.g. Pressure gage **13** indicates the pressure used to feed the quality grade of new oil selected to its associated constant displacement metering device or pump **4** (not shown) which meters the selected grade of new oil with a high degree of precision. This oil feed pressure may range from 20 to 100 p.s.i.g., although pressures of 40 to 80 p.s.i.g. are most frequent. Vacuum gauge **14** indicates the vacuum applied to used oil cylinder **3** in drawing the used oil from the crankcase. The vacuum will usually be from 20 to 29 inches Hg, e.g., 24 to 28 inches Hg. A bank of lights **15** may be used to indicate to the customer and/or operator the quantity of new oil that has been added to new oil cylinder **5** (e.g., one light may be illuminated per each one pint increment of new oil). Additionally, transparent cylinders **3** and **5**, when used, may be graduated. Flexible hose **1** of some convenient length, e.g., 3 to 10 feet, and of an internal diameter of from about ¼″ to ½″, e.g., about ⅜″, is connected to an internal manifold (not shown) within the electronic oil changer which is, in turn, connected to transparent cylinders **3** and **5**. At the free end of the flexible hose **1** is a connector **16** of the type shown in FIGURE 3. This connector should be of the quick-connect type and capable of withstanding the pressure of new oil being forced into the crankcase, as well as withstanding the vacuum during oil withdrawal. This connector **16** is used to connect flexible hose **1** to an evacuation tube mounted in or on the crankcase. When, however, used oil is to be withdrawn from a crankcase via the oil fill pipe or the oil measuring stick guide tube, the connector **16** can be used to connect flexible hose **1** to a tube or wand that has been inserted into one of those openings. Preferably, the evacuation tubes as hereinafter described are employed. Input tubes **17** and **18** are used to feed the new and used oil into cylinders **3** and **5** and may contain check valves to prevent back flow or contamination between different qualities of oil.

FIGURE 3 illustrates in detail a connecting device (e.g., connector **16** of FIGURE 2) which can be used to rapidly join the flexible hose **1** of the electronic oil changer to the upper end of an evacuation tube, wand, etc. A connector of the type shown is manufactured by Mechanical Products Corporation, 1716 West Hubbard Street, Chicago 22, Illinois. In operation, lever **16*a*** is depressed and the end of an evacuation tube, wand, etc., is inserted into the open end of connector **16**. Lever **16*a*** is then released and a leak-free connection is formed.

FIGURE 4 illustrates a drain plug-type evacuation tube which can be used with present day automobiles in cooperation with the present invention. The plug **19**, itself, resembles a normal drain plug and its threaded end is hollow (**19*a***) for part of its length in an axial direction. It is provided with one or more lateral ports **19*b***. It is passed through an annular member **20** (e.g., made of nylon, etc.) and screwed into the normal drainage outlet of crankcase **21**. Thus, oil contained in the crankcase **21**

can, under the influence of the automatic oil changer, flow down through the hollow portion **19***a* of plug **19**, out the lateral ports **19***b*, through annular member **20** and on to the oil changer (not shown in this view) via tube **23** as shown by the arrows. During oil changing operations, the flexible hose **1** of the oil changer would be connected to tube **23** by means of a connecting device, e.g., connector **16**. Generally tube **23** will have an inside diameter of about ¼" to ½", although thin walled ⅜" tubing is preferred. At the present time, it is believed that five sizes of drain plugs will accommodate all mass produced American cars since 1950, with the possible exception of the Hudson.

FIGURE 5 illustrates a wall-type evacuation tube as it might appear if it were part of the manufacturers installed equipment. An opening **25** is cut in the wall of crankcase **21'** and a rigid tube **26** is inserted therethrough. Tube **26** will generally have an inside diameter of about ¼ to ½ inch although use of thin walled (e.g., 0.040" or less) ⅜ inch O.D. tubing is preferred. One end of tube **26** rests on the floor of crankcase **21'** at its lowest point. The lower end of tube **26** is contoured to rest against the bottom of crankcase **21'** at its lowest point. The contoured end of dip leg **26** is notched to provide a lateral area open to the oil which is approximately equal to the inside cross-sectional area of tube **26**. Preferably, the maximum height of the notches **25***a* in the end of tube **26**, above the floor of crankcase **21'**, will be no more than 0.15 inch and preferably not less than 0.080 inch. This allows substantially all of the oil held in crankcase **21'** to be withdrawn by suction created in tube **26**. Tube **26** is affixed to the wall of crankcase **21'** at point **25** by some suitable technique, e.g., welding. One end of a flexible tube **23'** is attached to the uppermost end of tube **26** and the other end is extended to a point above the normal oil level **22** in crankcase **21'**. When not in use, tube **23'** may be closed by some suitable device **24**, e.g., a plastic snap cap.

According to the present invention, an evacuation tube, such as one of those shown in FIGURES 4 or 5, is attached to a lubricant containing case **21**, e.g., a crankcase. The flexible hose portion (e.g., **23** or **23'**) of the evacuation tube is extended into the upper engine compartment, terminating at a point well above the normal oil level **22** within the crankcase **21'**.

By far the most satisfactory method for removing used oil is through the wall-type evacuation tube as shown in FIGURE 5. Alternatively, however, the other types of evacuation tubes may be used and, in some instances, oil may be withdrawn via a flexible hose or wand inserted into the oil fill pipe or oil measuring stick guide tube.

DETAILED DESCRIPTION AND OPERATION

The detailed description and sequence of operation which follows is made with specific reference to FIGURES 6, 7, and 8 which should be read simultaneously. FIGURE 6 is a diagrammatic view of a preferred embodiment of the present invention while FIGURES 7 and 8, taken together, are a schematic diagram of a control system for such an oil changer. For ease in reading the figures, the following reference symbols have been used.

L—line
LLS—lower limit switch
M—micro
P—pressure
PB—push button
RL—relay
SV—solenoid valve
SW—switch
TD—time delay
ULS—upper limit switch
V—vacuum

The several hourglass shaped contacts shown in vertical alignment above each element, e.g., relay **35** of FIGURE 7, correspond to the electrical contacts of their related element. For example, three (3) contacts are shown (by the dotted line), which also indicates that the contacts are ganged, to correspond to relay **35**. The upper contact is shown in a normally open position (as regards the circuit); the center contact is shown in a normally closed position (as regards the circuit) and the lower contact is not being used at all. The black portion of the hour-glass shaped contacts thus represents the conductive position while the white portion represents the non-conductive position. Once a relay is energized, the black and white portions will reverse themselves. Three contacts have been shown for all relays since many commercially available relays have that number of contacts. In accordance with conventional electrical drawing practice, FIGS. 7 and 8 show the contact positions of each of the relays in the power off or unenergized state. It will be understood that when in the normal sequence of operation a relay or push button, etc. is actuated, its associated contacts will all transfer from the electrical state shown in FIGS. 7 and 8 to an opposite electrical state. It will also be understood that this transfer of electrical state is effected by the simultaneous transfer of all three central moving contacts of each relay from their indicated position in electrical contact with the lower "black" normally closed contact into contact with the upper "white" normally open contact.

It is assumed, in the following description, that the hose **1** of the electronic oil changer of FIGURE 6 has been suitably connected to the lower reaches of a crankcase of a motor vehicle.

NORMAL SEQUENCE

(1) Select the desired quantity and quality of new oil to be added to new oil cylinder **5**. This selection is made by means of quantity selector switch **11** and quality selector switch **10**. The selection of oil quality, e.g., a premium grade motor oil, through quality selector switch **10** will activate the corresponding oil metering device **4** (e.g., constant displacement cylinder) with its attendant oil control solenoid valve **40**, control valve **43**, and upper and lower limit switches **38** and **42**, respectively. Thus if the quality of new oil selected by quality selector switch **10** was that represented by the extreme left postion shown in FIG. 8, only one set of upper and lower limit switches (**38** and **42**) would be employed and all the remaining upper and lower limit switches ULS **38** and LLS **42** and their associated solenoid valves SV **40** shown in brackets would be idle. Metering stepping switch **44** is used to cause the measurement of new oil to be halted when the selected quantity of new oil has been added to new oil cylinder **5**.

(2) Press automatic push button switch **27** to close its normally open contact points.

(3) Relay **28** and time delay relay **29** are thus placed in parallel across lines **L–36** and **L–73** and energized and latched (i.e., maintained energized) through the uppermost set of normally closed holding points of relay **30** (reset relay) until such later time that relay **30** is energized.

(4) The operation of push button switch **27** is also effective to connect the hot side (**L–36**) of the power supply to the vacuum pump **2** and solenoid valve **31** which are energized via the normally closed lowermost contact on RL–32. Once the push button **27** is released the pump **2** and valve **31** remain connected to the line **L–36** through the normallly open uppermost contacts of relay **28** and the normally closed uppermost contact points on relay **30**.

(5) Three-way valve **33** is in position A so that used oil coming through line **1** will be fed into used oil cylinder **3**.

(6) Relay **34** is energized through relay **35** and is latched to line **36**.

(7) Solenoid valve **31** opens to allow the vacuum to be applied to used oil cylinder **3** and vacuum switch **37**.

(8) The normally open contact on time delay **29** allows vacuum switch **37** to build up vacuum and open its contact.

(9) The circuit through the upper limit switch **38** activates relay **39** and solenoid valve **40**. Solenoid valve **40**

remains locked into position until oil pressure on top of measuring piston **41** forces the measuring piston **41** downward and trips lower limit switch **42** releasing relay **39** and closing solenoid valve **40**.

(10) When solenoid valve **40** is closed, the flow of new oil through control valve **43** is changed and the new oil then flows up against the bottom of measuring piston **41** forcing it upward against upper limit switch **38**. This causes the discrete quantity of oil above measuring piston **41** to be forced out into new oil cylinder **5**.

(11) If the quantity of new oil required by quantity selector switch **11** (as modified by metering stepping switch **44**) has not been satisfied, upper limit switch **38** will continue to close the circuit to re-energize relay **39** and solenoid valve **40** and steps 9 and 10 supra will be repeated until the desired quantity of oil has been provided.

(12) When the quantity selected by quantity selector switch **11** has been satisfied, the circuit through upper limit switch **38** and selector switch **11** will energize relay **35**, de-energizing relay **39** and solenoid valve **40** will remain closed.

(13) As the major portion of the used oil is drawn from the crankcase via line **1** through valve **33** into used oil cylinder **3**, air, from the crankcase, entering used oil cylinder **3** will cause the vacuum to reduce (increase in pressure).

(14) As the vacuum drops to 6 inches of mercury, vacuum switch **37** closes and activates time delay **45** through relay **46**.

(15) Time delay **45** allows the vacuum pump **2** to continue pumping for 20 seconds to remove the last of the used oil from the crankcase and to clear hose **1**.

(16) As time delay **45** times out, it will act through relay **35** and energize relay **32**, time delay **47**, solenoid valve **48**, and solenoid valve **49**.

(17) Activation of relay **32** stops vacuum pump **2**, de-energizes solenoid valve **31**, and completes the D.C. circuit to energize relay **50**. Time delay **45**, acting through relay **28**, latches in relay **51**.

(18) Valve motor **52** is energized by relay **50** and turns cam **53** until micro switch **54** is opened and drops out relay **50** with valve **33** is position B, thus connecting the crankcase to new oil cylinder **5** via line **1**.

(19) As micro switch **54** is opened solenoid valve **48**, solenoid valve **49**, relay **32** and time delay **47** will be energized since the oil measuring device **4** has completed its metering job and metering stepping switch **44** has completed its sequence. This connects the line air pressure **6** (e.g., 30 p.s.i.g.) to the top of the new oil in the new oil cylinder **5** and forces the previously measured new oil from cylinder **5** through valve **33** and line **1** into the crankcase.

(20) Time delay **47** prevents the action of pressure switch **55** until the pressure builds up within new oil cylinder **5**. Pressure switch **55** opens before the time out of time delay **47**.

(21) As all of the new oil within cylinder **5** is discharged, the pressure within the cylinder will fall. When the pressure reaches 5 p.s.i.g., time delay **47** and the closing of the contact on pressure switch **55** will activate relay **30** which drops out relay **51** and latches in relay **56**.

(22) Relay **56** will then activate valve motor **52**, which turns cam **53** causing micro switch **57** to open (with valve **33** in position A).

(23) The metering stepping switch **44** is energized through relay **56** and resets for the next cycle. When the metering stepping switch reaches home, it drops out relay **35** which drops out relay **32**, de-energizing solenoid valves **48** and **49**.

RETURNING USED OIL TO THE CRANKCASE

(1) Press refill push button switch **58**.

(2) Relay **59** will be energized and latch in through micro switch **60**. The valve motor **52** will be energized and turn cam **53** until micro switch **60** is opened, dropping out relay **59** with valve **33** in position C.

(3) Relay **61** will be energized opening solenoid valves **62** and **63**. Solenoid valve **64** and time delay **65** are also energized through relay **61**.

(4) Line air introduced into used oil cylinder **3** through solenoid valve **62** will force the used oil through solenoid valve **63** to valve **33** which is in position C and on to the crankcase via line **1**.

(5) As the pressure in used oil cylinder **3** drops to 5 p.s.i.g. (due to all of the oil being discharged) pressure switch **66** acting through time delay **65** will energize the reset relay **30**. Reset relay **30** drops out relay **51** and latches in relay **56**.

(6) Valve motor **52** is energized by relay **56**, turns cam **53**, causing micro switch **57** to open with valve **33** in position A. Metering stepping switch **44** is energized through relay **56** and resets for the next cycle. When the metering stepping switch **44** reaches home, it drops out relay **32** de-energizing solenoid valves **48** and **49**.

ADDING NEW OIL WITHOUT FIRST DRAINING USED OIL

(1) Select the quantity and quality of oil by means of switches **10** and **11**.

(2) Press the add oil push button switch **67**.

(3) Relay **51** is latched in. Relay **34** is energized and latches through relay **35** to L–**36**.

(4) Relay **34** activates relay **39** and solenoid valve **40** through upper limit switch **38**. Solenoid valve **40** remains in position until the oil pressure on top of measuring piston **41** forces the measuring piston **41** downward and trips lower limit switch **42** releasing relay **39** and closing solenoid valve **40**.

(5) When solenoid valve **40** is closed, the flow of new oil through control valve **43** is changed and the new oil then flows up against the bottom of measuring piston **41** forcing it upwardly against upper limit switch **38**. This causes the discrete quantity of oil above measuring piston **41** to be forced out into new oil cylinder **5**.

(6) If the quantity of new oil required by quantity selector switch **11** has not been satisfied, upper limit switch **38** will continue to close the circuit and steps 4 and 5, supra, will be repeated until the desired quantity of new oil has been provided.

(7) When the quantity of oil selected by quantity selector switch **11** has been satisfied, the stepping switch **44** closes the circuit through relay **34**, metering stepping switch **44**, quantity selector **11** and relay **46**, thus stopping the measuring sequence and latching in relay **35**.

(8) Relay **35** energizes relay **32**, time delay **47**, and solenoid valves **48** and **49**.

(9) Activation of relay **32** energizes valve motor **52** through relay **50**. Valve motor **52** turns cam **53** until microswitch **54** is opened and relay **50** drops out with valve **33** in position B.

(10) Air enters new oil cylinder **5** through solenoid valve **48**. The new oil is then forced from new oil cylinder **5** to the crankcase via line **1** in the manner as previously described with reference to the Normal Sequence.

(11) As the new oil is discharged from new oil cylinder **5**, the pressure within the cylinder will drop. When the pressure reaches 5 p.s.i.g. time delay **47** and pressure switch **55** will activate relay **30**, dropping out relay **51** and latching in relay **56**.

(12) Valve motor **52** will be energized by relay **56** and turn cam **53** until microswitch **57** is opened with valve **33** in position A. The metering stepping switch **44** is energized through relay **56** and resets for the next cycle. As the stepping switch **44** reaches home it drops out relay **35** which drops out relay **32** thus de-energizing solenoid valves **48** and **49**.

Used oil is drained from used oil cylinder **3** by pressing the drain push button switch **68** which allows the line air pressure to enter the top of used oil cylinder **3** and force the used oil through solenoid valve **64** to slop oil **7**. Reset push button switch **69** is used to reset the electronic

changer, at any point in its operation, to its initial static position. The various rectifiers (**70** and **71**) resistor **72** and capacitor **73** are used to provide the necessary electrical requirements for the sundry relays, motors, etc. More specifically, rectifier **71** supplies D.C. power for the D.C. relays and metering stepping switch **44**. Rectifier **70** is a gating mechanism to allow D.C. relay **56** to only latch in when a positive pulse is received. Relay **30**, on the same circuit, will latch in on either a positive or negative pulse. Resistor **72** and capacitor **73** form a time constant to temporarily latch in relay **50** until it is latched in by microswitch **54**. It then offers no further holding power.

EXAMPLES

The present invention will be more clearly understood by reference to the following examples which include a preferred embodiment.

Example 1

A completely self-contained apparatus substantially as described has been constructed for experimental purposes and tested on a number of automobiles on which evacuation tubes of the types shown in FIGURES 4 and 5 had been mounted. In the device, as constructed, an initial vacuum of 27 inches Hg was employed for draining the used oil and a 20 second time cycle was set to begin when the vacuum had diminished to 7 inches Hg. A pressure of 60 p.s.i.g. was used in introducing the new oil to the constant displacement cylinder **4** used for metering the new oil into the new oil cylinder **5**. Air pressure of 30 p.s.i.g. was applied to force the new oil from the new oil cylinder **5** into the crankcase **21**. It was found that, with a thin walled evacuation tube having a ⅜ inch outside diameter, used oil (at 125° F.) could be removed at the rate of 1 pint in every 5½ seconds. It was found that the hood of an automobile could be raised, the flexible hose **1** from the electronic oil changer connected to the evacuation tube, the quantity and quality of new oil selected, 4 quarts of used oil removed from the crankcase **21** and 4 quarts of new oil added to the crankcase **21** in just under 2 minutes.

Numerous tests were conducted using the apparatus just described and it was determined that the oil removal via this electronic oil changer would, in all tested cases, equal or exceed the extent of oil removal via the normal drain plug technique. Typical quantities of residual used oil found in crankcases after evacuation with the electronic oil changer when used in conjunction with an evacuation tube of the type shown in FIGURE 5 were on the order of 5 cc. In most automobiles it was possible to exceed the oil removal possible through conventional draining by from 100 to 600 cc. An example of such a situation was found in a 1959 Lincoln where the drain plug is located part way up the side of the crankcase, thus allowing approximately 570 cc. of oil to remain in the crankcase after conventional draining. By installing the wall-type evacuation tube as shown in FIGURE 5 and using the electronic oil changer, it was possible to reduce this quantity of residual oil to about 5 cc. Using the drain plug type evacuation tube of FIGURE 4, the oil removal is substantially the same as that obtained by conventional draining.

Example 2

For purposes of experimentation and testing, an industrial model of the electronic oil changer has also been constructed for use on taxi fleets, trucks, etc., where there is no induvidual customer to satisfy. Here, the equipment was modified to eliminate transparent cylinders **3** and **5**. The used oil was pumped directly to a slop tank **7** and a single grade of new oil was used. Multiple grades of new oil were also tested using several constant displacement cylinders **4**. The results produced by that industrial oil changer were essentially the same as these obtained with the portable model described in Example 1.

The selection of commercially available counterparts of the various components used in constructing the aforementioned oil changers are believed to be well within the skill of the art. However, for whatever benefit that the public may derive, the following fragmentary list of suitable components is provided.

Stepping switch—Clare type 20 NBR R1858
Push buttons—Honeywell Series 2
Selector switch—JBT #MS-20-2
Rectifier—Full wave, 1 amp, 115 v. D.C.
Relays—Potter & Bromfield KRP
Time delays—Amperite
Selector switch—Centralab
Resistor—47K ohms
Capacitor—12 UF @ 150 v.
Glass cylinders (2)—Pyrex Double Tough 6" x 18"
Vacuum pump—Gast #0740-V4-G180X
Solenoid valve—3 way diff. Skinner V54DB2075
Solenoid valve—2 way Skinner LC2DB3150
Vacuum switch—Meletron DIT-H18
Gauge— -15-0-100# U.S. 17055
Pressure switch—Hobbs M1925
Check valve—Circle Seal #530B 2M-0.5
Measuring cylinder—Allen Air #A-200-4.825
Gauge—0-100# U.S. FIGURE 644
Cam.—¼ alum. plate
Motor—New England gear, 5 r.p.m., 66 inch, 16 torque, Model HD1
Tubing connector—Mechanical Products TC-1304

DISCUSSION

The vacuum type of apparatus as has just been described has a decided advantage over the use of positive displacement pumps for oil removal. For example, it has been noted that, in new cars, sand from the various castings will appear in the oil during the first two or three oil changes. Oil changers utilizing positive displacement pumps have been employed on new cars and found to be ineffective after 35 to 50 oil changes due to the extensive wear caused by this loose sand and foreign material. No such problems are encountered when using the present equipment which has been exhaustively tested.

The electronic oil changer may be constructed as a portable mechanism or as a permanent part of the gasoline dispensing island fixtures. As a permanent installation, only the relay cabinet, metering devices for the new oil and the transparent cylinders need be mounted at the island. The vacuum source, new oil in bulk, and the slop oil tank could be located in some central location and piped to the various islands.

Having thus described the present invention with a certain degree of particularity, it is to be realized that numerous other modifications and adaptations (e.g., using the device to remove fuel from fuel tanks, flushing, etc.) can be made within the spirit and scope of the invention as hereinafter claimed.

I claim:

1. A sequential switching device suitable for use as automatic control means in an apparatus for withdrawing used oil from a lubricant holding case by vacuum and thereafter adding new oil under pressure to said case, wherein said apparatus includes conduit means, distributing means in communication with said conduit means, vacuum means in communication with said distributing means, oil supply means in communication with said distributing means, air pressure means cooperating with said oil supply means, and automatic control means for said vacuum means, said air pressure means, said oil supply means, and said distributing means, which comprises in combination

(a) initiator means for activating said vacuum means to thereby create a vacuum,

(b) a first means responsive to said initiator means for establishing communication between said lubricant holding case and said vacuum means through

said conduit means and said distributing means, said vacuum thereby withdrawing used oil from said lubricant holding case,

(c) a second means responsive to the level of vacuum produced by said vacuum means, said second means deactivating said vacuum means after said vacuum reaches a predetermined level,

(d) selector means for selecting a discrete quantity of new oil,

(e) a third means responsive to actuation of said selector means for measuring said discrete quantity of new oil,

(f) a fourth means responsive to the deactivation of said vacuum means for discontinuing said communication between said lubricant holding case and said vacuum means, said fourth means causing said distributing means to establish communication between said lubricant holding case and said oil supply means, said oil supply means including said measured quantity of new oil,

(g) a fifth means responsive to said deactivation of said vacuum means and responsive to said third means, said fifth means operatively connecting said air pressure means with said oil supply means including said measured quantity of new oil, thereby forcing said new oil into said lubricant holding case,

(h) a sixth means responsive to the level of pressure produced by said air pressure means, said sixth means disconnecting said air pressure means from said oil supply means after said pressure reaches a predetermined level,

(i) a seventh means responsive to said sixth means for resetting said sequential switching device to a normal position.

2. A sequential switching device as defined in claim **1** which also includes an eighth means selectively cooperating with said seventh means for resetting said sequential switching device to said normal position.

3. A sequential device as defined in claim **1** which also includes a ninth means selectively cooperating with said fourth and fifth means to effectuate the addition of said measured quantity of new oil, said ninth means bypassing said initiator means, thereby eliminating the sequence of operations relating to said withdrawal of used oil.

4. A sequential switching device suitable for use as automatic control means in an apparatus for withdrawing used oil from a lubricant holding case by vacuum and thereafter adding new oil under pressure to said case, wherein said apparatus includes conduit means, distributing means in communication with said conduit means, vacuum means in communication with said distributing means, oil supply means in communication with said distributing means, air pressure means cooperating with said oil supply means, and automatic control means for said vacuum means, said air pressure means, said oil supply means, and said distributing means, which comprises in combination

(a) initiator means for activating said vacuum means to thereby create a vacuum,

(b) a first means responsive to said initiator means for establishing communication between said lubricant holding case and said vacuum means through said conduit means and said distributing means, said vacuum thereby withdrawing used oil from said lubricant holding case,

(c) a second means responsive to the level of vacuum produced by said vacuum means, said second means deactivating said vacuum means after said vacuum reaches a predetermined level,

(d) selector means for selecting a discrete quantity of new oil,

(e) a third means responsive to said selector means for measuring said discrete quantity of new oil,

(f) a fourth means responsive to the deactivation of said vacuum means for discontinuing said communication between said lubricant holding case and said vacuum means, said fourth means causing said distributing means to establish communication between said lubricant holding case and said oil supply means, said oil supply means including said measured quantity of new oil,

(g) a fifth means responsive to said deactivation of said vacuum means and responsive to said third means, said fifth means operatively connecting said air pressure means with said oil supply means including said measured quantity of new oil, thereby forcing said new oil into said lubricant holding case,

(h) a sixth means responsive to the level of pressure produced by said air pressure means, said sixth means disconnecting said air pressure means from said oil supply means after said pressure reaches a predetermined level,

(i) a seventh means responsive to said sixth means for resetting said sequential switching device to a normal position,

(j) an eighth means selectively cooperating with said seventh means for resetting said sequential switching device to said normal position, and

(k) a ninth means selectively cooperating with said fourth and fifth means to effectuate the addition of said measured quantity of new oil, said ninth means bypassing said initiator means, thereby eliminating the sequence of operations relating to said withdrawl of used oil.

5. An electronic oil changer for withdrawing used oil from a lubricant holding case by vacuum and thereafter adding new oil by air pressure means to said case which comprises in combination:

(a) conduit means,

(b) distributing means in communication with said conduit means,

(c) vacuum means in communication with said distributing means,

(d) oil supply means in communication with said distributing means,

(e) initiator means for activating said vacuum means to thereby create a vacuum,

(f) a first means responsive to said initiator means for establishing communication between said lubricant holding case and said vacuum means through said conduit means and said distributing means, said vacuum thereby withdrawing used oil from said lubricant holding case,

(g) a second means responsive to the level of vacuum produced by said vacuum means, said second means deactivating said vacuum means after said vacuum reaches a predetermined level,

(h) selector means for selecting a discrete quantity of new oil,

(i) a third means responsive to said selector means for measuring said discrete quantity of new oil,

(j) a fourth means responsive to the deactivation of said vacuum means for discontinuing said communication between said lubricant holding case and said vacuum means, said fourth means causing said distributing means to establish communication between said lubricant holding case and said oil supply means, said oil supply means including said measured quantity of new oil,

(k) a fifth means responsive to said deactivation of said vacuum means and responsive to said third means, said fifth means operatively connecting said air pressure means with said oil supply means including said measured quantity of new oil, thereby forcing said new oil into said lubricant holding case,

(l) a sixth means responsive to the level of pressure produced by said air pressure means, said sixth means disconnecting said air pressure means from said oil supply means after said pressure reaches a predetermined level,

(m) a seventh means responsive to said sixth means for resetting said sequential switching device to a normal position,

(n) an eighth means selectively cooperating with said seventh means for resetting said sequential switching device to said normal position, and

(o) a ninth means selectively cooperating with said fourth and fifth means to effectuate the addition of said measured quantity of new oil, said ninth means bypassing said initiator means, thereby eliminating the sequence of operations relating to said withdrawal of used oil.

References Cited by the Examiner

UNITED STATES PATENTS

1,815,221	7/31	Sweetland	184—1.5
2,320,048	5/43	Parson	184—1.5

FOREIGN PATENTS

707,315	4/54	Great Britain.

LAVERNE D. GEIGER, *Primary Examiner.*

MILTON KAUFMAN, *Examiner.*