Oct. 27, 1931. A. L. WERTZ 1,829,173

COMBINED FLUSHER AND LUBRICANT DISPENSER

Filed Nov. 17, 1928 6 Sheets-Sheet 1

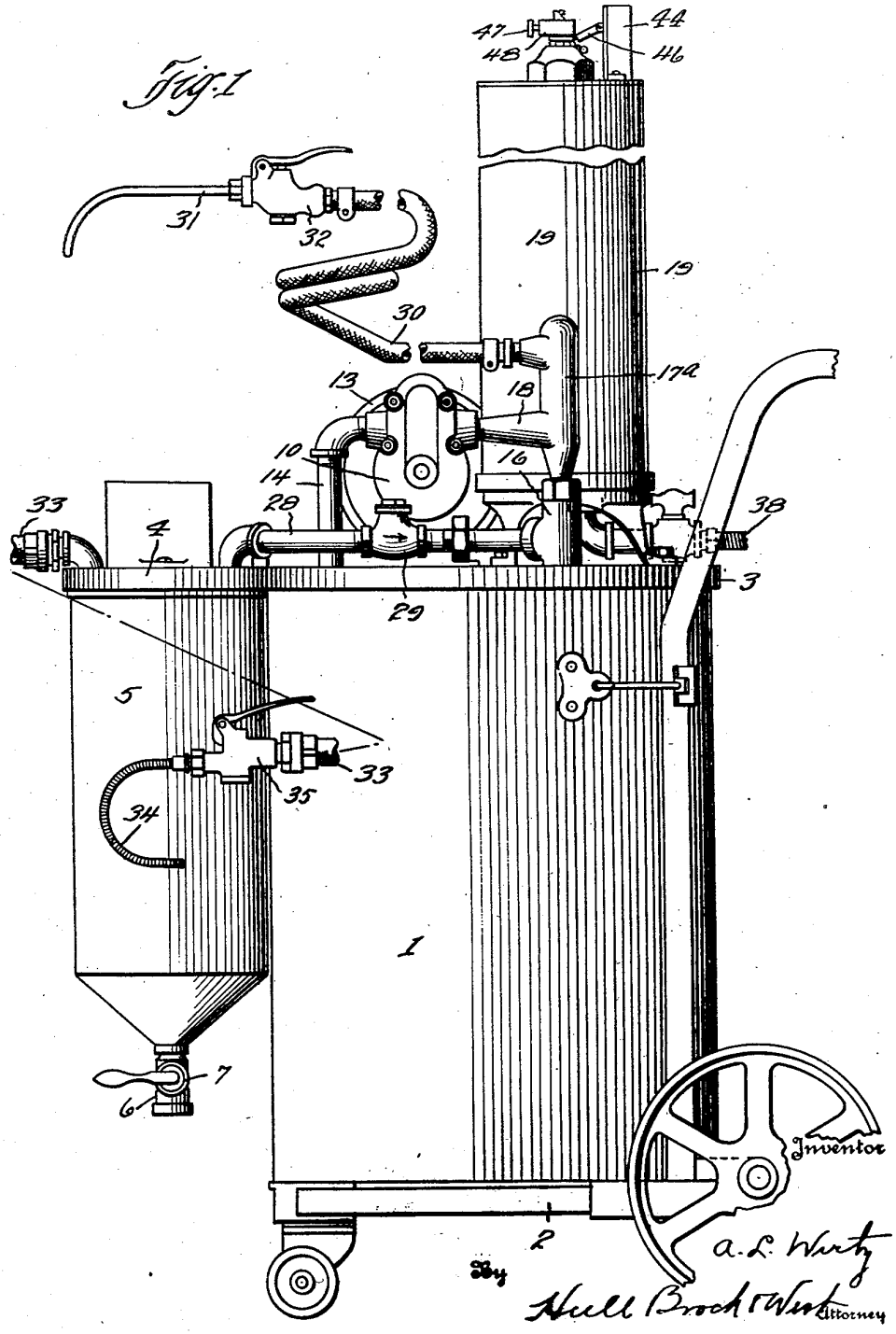

Oct. 27, 1931. A. L. WERTZ 1,829,173

COMBINED FLUSHER AND LUBRICANT DISPENSER

Filed Nov. 17, 1928 6 Sheets-Sheet 2

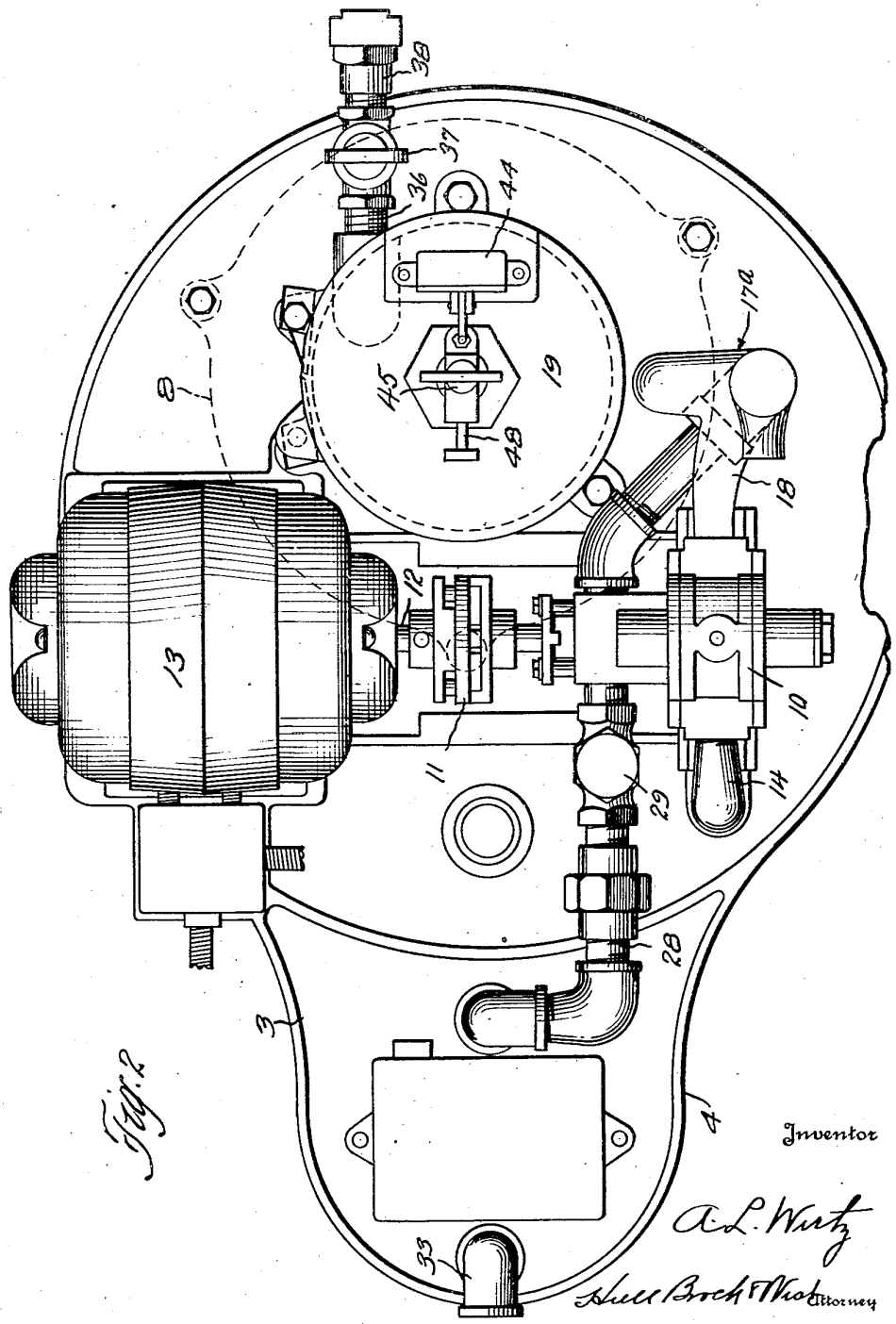

Fig. 2

Inventor

A. L. Wertz

Hull Brock & Thob Attorney

Oct. 27, 1931. A. L. WERTZ 1,829,173

COMBINED FLUSHER AND LUBRICANT DISPENSER

Filed Nov. 17, 1928 6 Sheets-Sheet 3

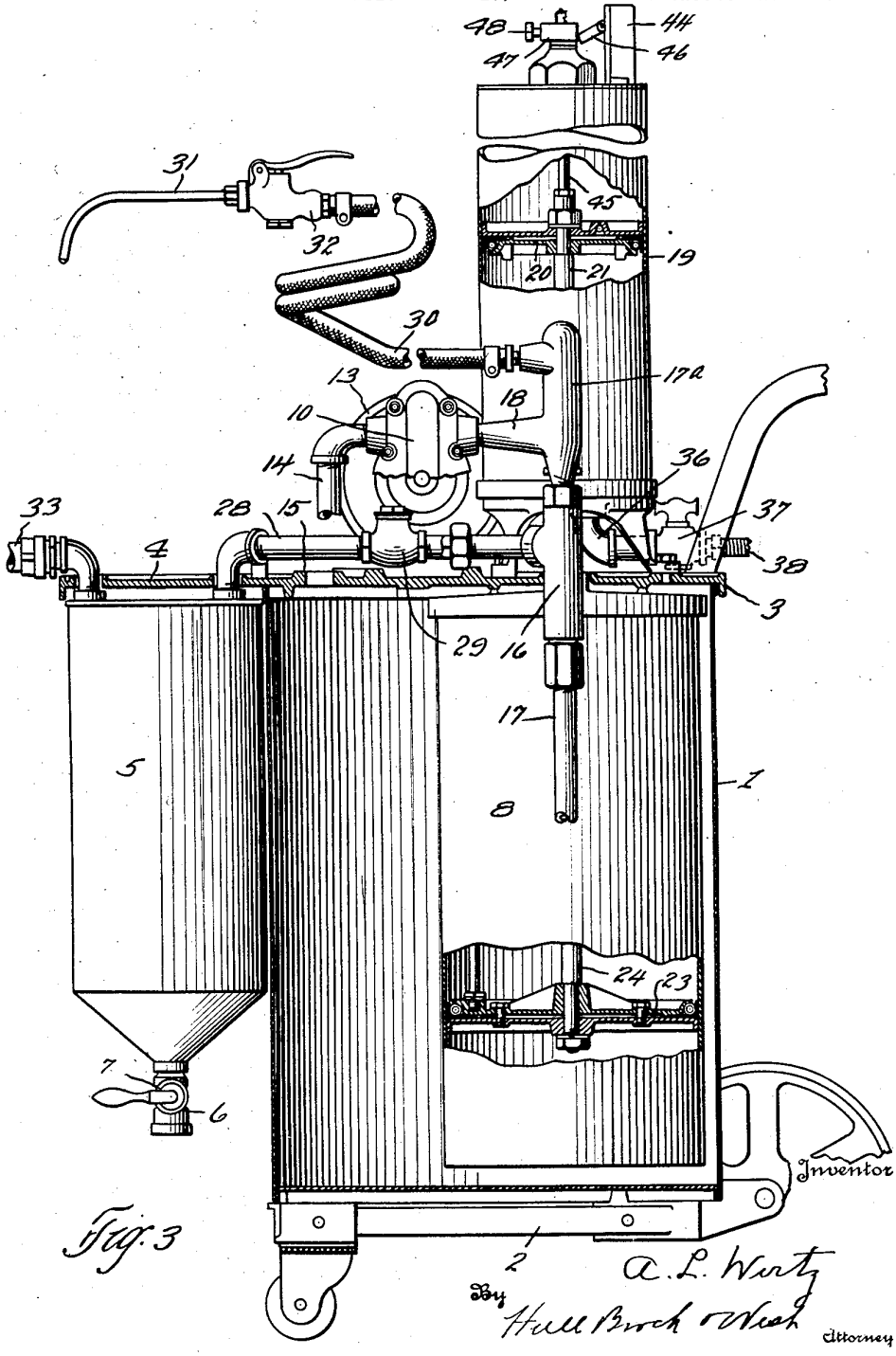

Oct. 27, 1931. A. L. WERTZ 1,829,173

COMBINED FLUSHER AND LUBRICANT DISPENSER

Filed Nov. 17, 1928 6 Sheets-Sheet 4

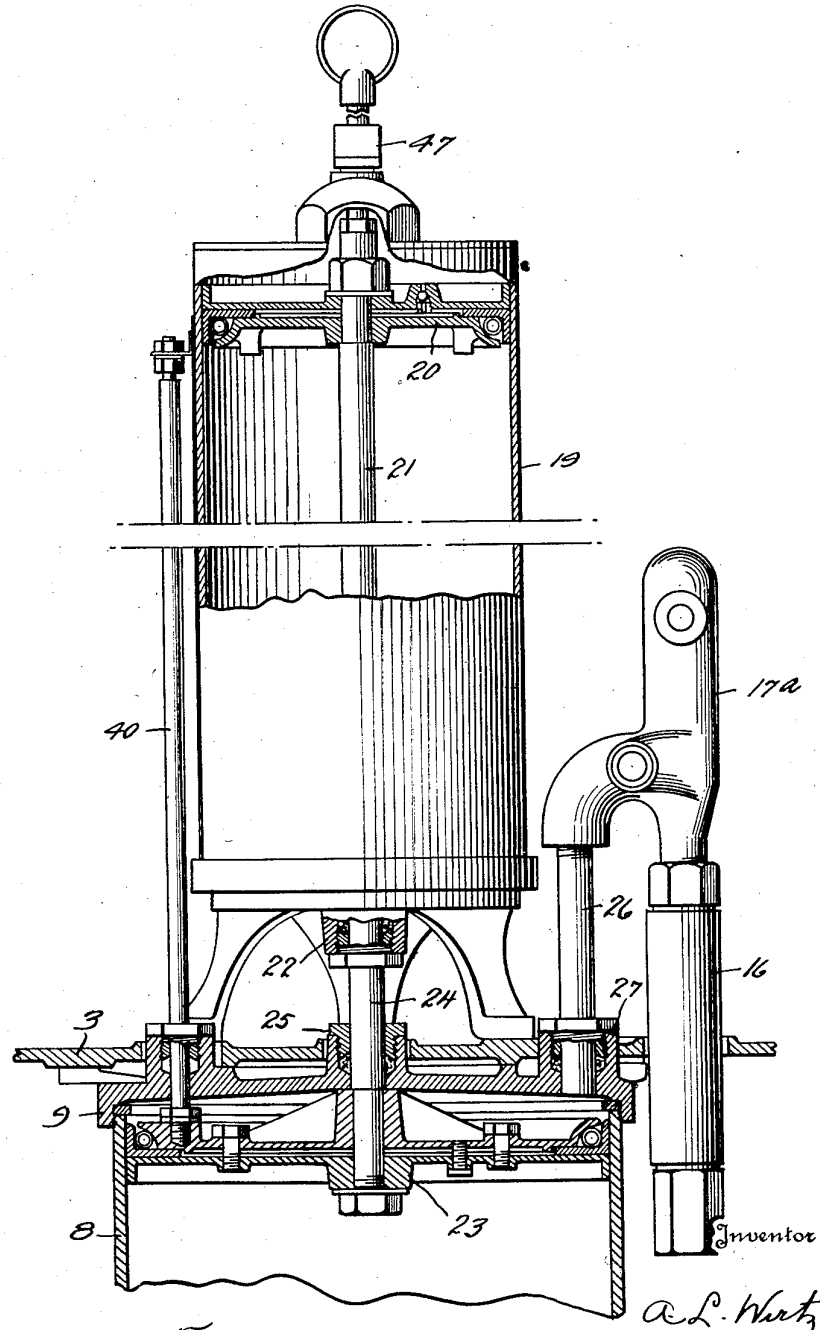

Inventor
A. L. Wertz
By Hull Brock & Welsh
Attorney

Fig. 4

Oct. 27, 1931. A. L. WERTZ 1,829,173

COMBINED FLUSHER AND LUBRICANT DISPENSER

Filed Nov. 17, 1928 6 Sheets-Sheet 5

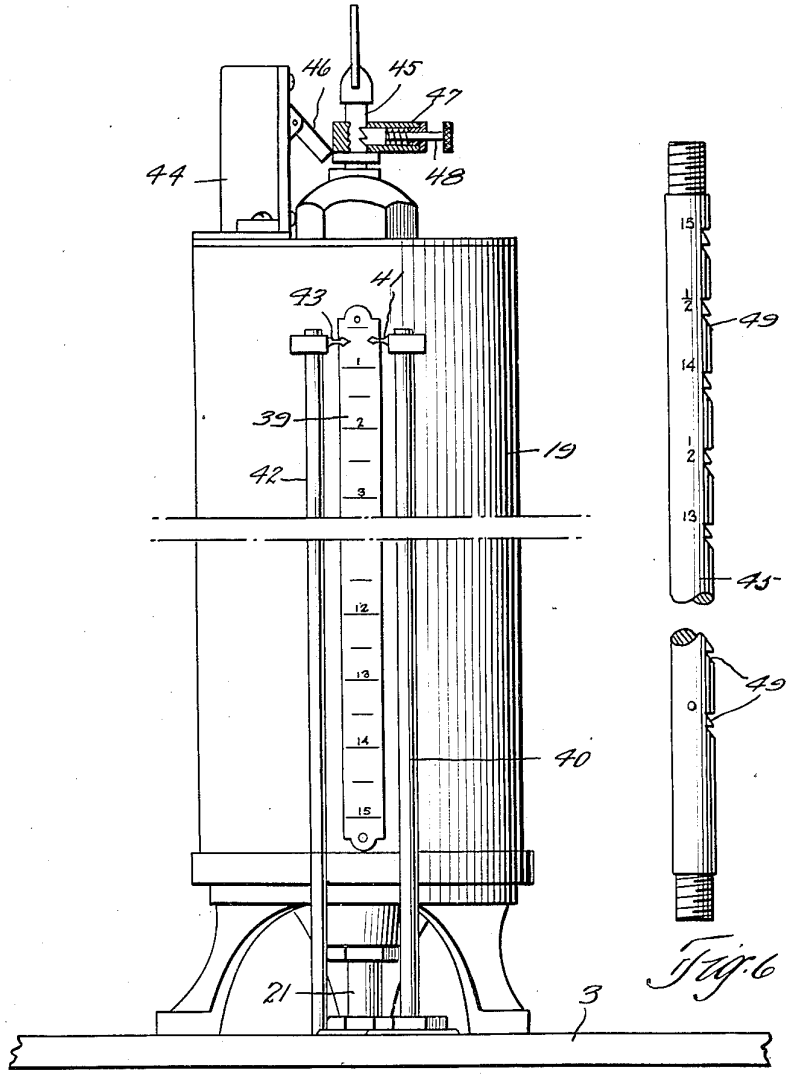

Fig. 6

Fig. 5

Inventor

A. L. Wertz

By Hull Brock & West

Attorney

Oct. 27, 1931. A. L. WERTZ 1,829,173

COMBINED FLUSHER AND LUBRICANT DISPENSER

Filed Nov. 17, 1928 6 Sheets-Sheet 6

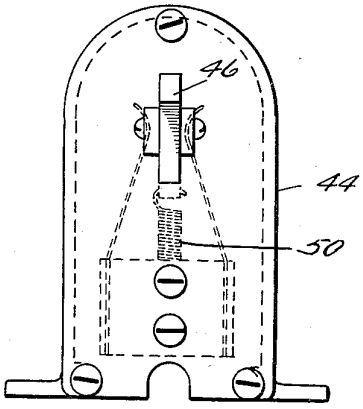

Fig. 8

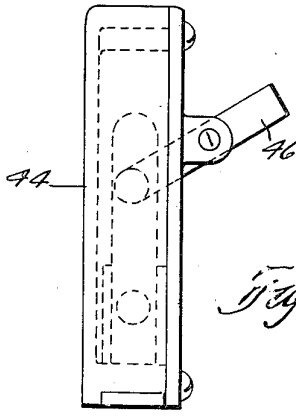

Fig. 9

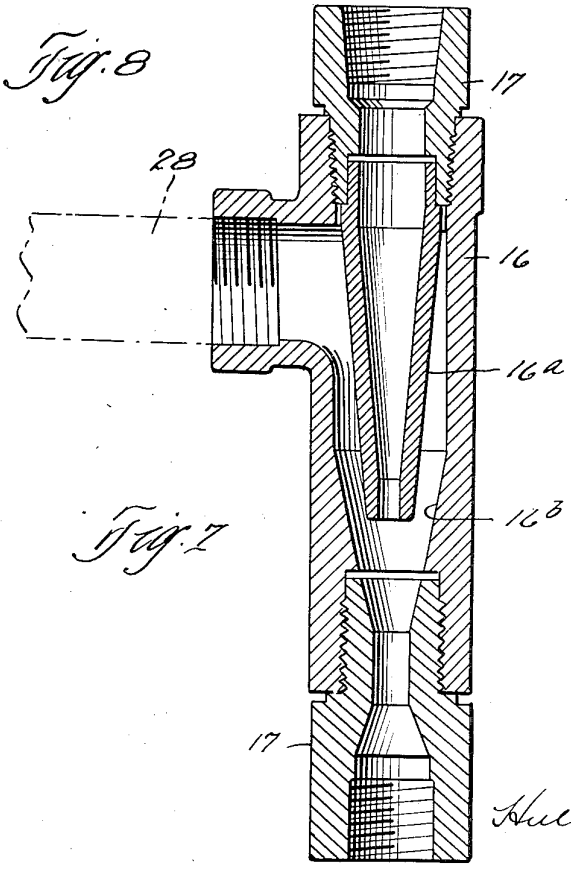

Fig. 7

Inventor

A. L. Wertz

Hull Brock & West

Attorney

Patented Oct. 27, 1931 1,829,173

UNITED STATES PATENT OFFICE

AUSTIN L. WERTZ, OF LAKEWOOD, OHIO

COMBINED FLUSHER AND LUBRICANT DISPENSER

Application filed November 17, 1928. Serial No. 320,057.

This invention relates to a combination flushing device and lubricant dispenser which is particularly adapted for use in cleaning and flushing the transmissions and differentials of automotive vehicles.

The main object of the invention is to provide a combined flushing and dispensing unit by means of which the transmission or differential of an automobile may be cleaned and flushed and which may be operated to deliver clean lubricant into the mechanism after the cleaning and flushing operation has been completed.

A further object of the invention is to provide a flushing and dispensing unit of the character described which is simple and compact in construction, efficient and dependable in operation and which is well adapted for quantity production at comparatively low cost.

A further object of the invention is to provide a flushing and dispensing unit of the character described in which a flushing oil, such as kerosene may be delivered to the transmission or differential of an automobile for the purpose of loosening and removing used lubricant which might adhere to the gears or housing and which is provided with a suction line for withdrawing the used dirty lubricant from the differential or transmission, the device being provided also with means for filtering and separating the solid particles from the diluted lubricant removed from the differential or crank case; and which is also provided with a lubricant dispenser for dispensing clean lubricant in predetermined quantities, the whole device being operated from a single power unit.

Further and more limited objects of the invention will appear as the description proceeds and by reference to the accompanying drawings in which Fig. 1 is a view in side elevation of an apparatus constructed in accordance with the preferred embodiment of my invention; Fig. 2 is a top plan view of the apparatus shown in Fig. 1; Fig. 3 is a view partly in side elevation and partly in vertical section so as to more clearly illustrate the interior mechanism; Fig. 4 is a fragmentary view partly in side elevation and partly in vertical section and illustrating the details of the lubricant dispenser; Fig. 5 is a view in front elevation with parts broken away so as to more clearly illustrate the mechanism for indicating to the purchaser the amount of lubricant delivered; Fig. 6 is a detail view of the measuring rod which cooperates with the lubricant container to cut off the delivery of lubricant after a predetermined amount has been dispensed; Fig. 7 is a vertical sectional view of the injector forming part of my apparatus and Figs. 8 and 9 are detail views of the cut-out switch for cutting off the flow of current to the motor when a predetermined amount of lubricant has been dispensed.

Referring now to the drawings, the reference character 1 designates a tank, which may be a standard sized drum and which is preferably mounted on a three-wheeled truck 2 by means of which the apparatus may be transported from place to place. The tank or drum 1 is preferably annular in shape and secured over the tank 1 in any suitable manner is a cover 3 of the shape shown most clearly in Fig. 1 and which has a projecting portion 4. The cover 3 just fits the upper end of the container 1 and the projecting portion 4 extends beyond one side thereof as shown. Carried by the projecting portion 4 of the cover is a container 5 having an outlet 6 controlled by a suitable valve 7. Also carried by the cover 3 and disposed within the container 1 is a cylinder 8 which is threadedly secured to an annular depending skirt 9 on the cover. Mounted on the top of the cover 3 is a rotary pump 10 having a shaft 11 which is disposed in alignment and nonrotatably connected to a shaft 12 of an electric motor 13 also carried by the cover. The pump 10 has an intake pipe 14 which extends through an opening 15 in the cover 3 and into the tank 1 and has its lower end disposed adjacent the bottom thereof. Carried by the cover 3 is an injector 16 from which leads a discharge pipe 17 the lower end of which is disposed within the interior of the tank 1. Connected with the opposite side of the injector is a connection 17[a] from which leads a pipe 18 which connects with the discharge

side of the pump. Also carried by the cover 3 is a lubricant reservoir 19 in which is arranged a piston 20 having a piston rod 21 leading through a stuffing box 22 in the bottom thereof. Arranged within the cylinder 8 is a piston 23 having a piston rod 24 leading through a suitable stuffing box 25 in the cover 3 and connected with a piston rod 21. Leading from the connection 17[a] is a pipe 26 which leads through a suitable stuffing box 27 in the cover 3 and communicates with the interior of the cylinder 8 above the piston 23. Also leading from the injector 16 is a pipe 28 which connects with the upper end of the container 5 and arranged within this pipe is a check valve 29 which opens in the direction of the arrow in Figs. 1 and 2.

Also leading from the connection 17[a] is a flexible discharge pipe 30 having a nozzle 31 and controlled by a suitable valve 32. Leading from the container 5 is a flexible conduit 33 having an armored nozzle 34 and controlled by a suitable valve 35. The tank 1 is normally about three-quarters filled with a flushing oil, such as kerosene. When the motor is started, the pump is driven and takes in liquid through the intake pipe 14 and discharges the same through the discharge pipe 18, the connection 17[a], injector 16 and discharge pipe 17 back into the tank 1. The injector 16 is shown in detail in Fig. 7 and comprises the discharge nozzle 16[a] and a restricted passageway 16[b]. The liquid flowing through the injector causes a suction through the pipe 28 which communicates with the upper end of the container 5 thereby causing considerable vacuum therein. When it is desired to flush and clean out a transmission or differential, the suction nozzle 34 is inserted into the differential or transmisison and the vacuum within the container 5 causes the lubricant to be withdrawn through the nozzle 34 and pipe 33 when the valve 35 is open. Unless the lubricant within the transmission and differential is very thick the suction through nozzle 34 and pipe 33 will be sufficient to withdraw the lubricant and deliver the same into the container 5. For the purpose of further diluting lubricant in the transmission or differential and for flushing and cleaning the gears and housing, the nozzle 31 is inserted into the gear housing and as this connection leads from the pressure side of the pump, the flushing oil will be discharged through the nozzle 31 with considerable force when the valve 32 is opened. This nozzle may be used to dislodge the heavier particles of lubricant from the gears and housing and serves to dilute the lubricant within the gear housing sufficiently so that it may be withdrawn through the nozzle 34. The injector 16 being vertically disposed and discharging in the direction of gravity tends to create a considerable vacuum within the container 5 and pipe 28. In fact with my apparatus I am able to obtain a vacuum in container 5 of from 24 to 28 inches.

Leading from the bottom of the lubricant reservoir 19 is a discharge pipe 36 having a valve 37 therein and from which leads a flexible conduit 38. The reservoir 19 may be filled with lubricant by means of a pump or gun by disconnecting the flexible connection 38 and connecting the pump or gun thereto and forcing the lubricant into the reservoir below the piston 20. As the pipe 26 leading from the connection 17[a] is connected with the upper side of the piston 23 in the working cylinder 8, it will be seen that as long as the motor is running pressure will be exerted upon the upper side of the piston 23 and likewise upon piston 20 in the container 19 which is rigidly connected with the piston 23 through the piston rods 21 and 24. After the transmission or differential has been thoroughly flushed and cleaned, the flexible conduit 38 may be connected with the interior of the transmission or differential housing and the valve 37 opened, whereupon the pressure of fluid on the piston 23 will force the lubricant from the container 19 through the outlet pipe 36 and conduit 38.

In order to determine the amount of lubricant dispensed and to give visual indication thereof to a customer, the reservoir 19 is provided on one side with a suitable scale 39 and connected with the piston 23 is a rod 40 which leads through a suitable stuffing box in the cover 3 and has a pointer 41 connected with the upper end thereof and disposed over and adjacent the scale 39, as shown most clearly in Fig. 5. Also carried by the cover 3 and frictionally and slidably held therein is a rod 42 having a pointer 43 which is set opposite to the pointer 41 before the dispensing operation is started. As the lubricant is dispensed from the reservoir 19 the piston 23 will be moved downwardly and with it the piston 20 and also the rod 40. After the dispensing operation has been completed the distance between the pointers 41 and 43 will indicate to the customer the amount of grease dispensed. After the dispensing operation has been completed the pointer 43 will be moved again to a point opposite the pointer 41 and be ready for the next dispensing operation. The scale 31 may be calibrated in any suitable units, such as pounds.

For the purpose of cutting off the flow of lubricant from the reservoir 19 after a predetermined amount has been dispensed, I provide a suitable cut-out switch 44 which is preferably mounted on the top of the reservoir 19. Carried by the piston 20 and extending through a suitable stuffing box in the top of the container 19 is a rod 45, shown in detail in Fig. 6, and having a suitable scale thereon. The cut-out switch 44 is connected in series with the circuit to the motor and has a lever 46 which projects in close proximity

to the rod 45. Carried by the rod 45 and adjustably mounted thereon is a member 47 having a spring latch 48 thereon which is adapted for engagement in the notches 49 in the rod 45.

The switch lever 46 is so disposed with respect to the member 49 that it will be engaged thereby upon movement of the shaft 45 downwardly. The cut out switch 44 is shown in detail in Figs. 8 and 9 and the arrangement is such that the switch lever 46 is normally urged to a position closing the circuit by means of a coil spring 50. Should the customer require, for example, five pounds of lubricant, the member 47 will be slid upwardly on the rod 45 a distance corresponding to five pounds of lubricant and as the lubricant is dispensed the rod 45 will be moved downwardly with the piston and with it the member 47 which is held in engagement therewith by means of the latch 48. When the piston has moved downwardly a sufficient distance to dispense five pounds of lubricant, the member 47 will engage the switch arm 46 and move the same downwardly as shown in Fig. 5 thereby breaking the circuit to the motor and discontinuing the dispensing operation of the device.

It will therefore be seen that I have provided mechanism in which the attendant as well as the customer will be assured that a certain predetermined amount of lubricant has been delivered.

When all of the lubricant has been dispensed from the container 19, and it is desired to refill the same, the flexible connection 38 is removed and a grease gun or pump applied to the discharge pipe and fresh lubricant forced into the container. As that portion of the cylinder 8 above the piston 23 is filled with the flushing oil, it will be seen that the oil in this space will escape through the pipe 26 connection 17[a], through the injector 16, back to the interior of the tank 1.

It will now be clear that I have provided a combined flushing and dispensing unit in which the dispensing mechanism is carried by the flusher and operated from the same source of power as the flusher. Various changes may be made in the details of construction and arrangement of the various parts without departing from the spirit of my invention. It is therefore to be understood that my invention is to be limited only in accordance with the scope of the appended claims.

Having thus described my invention, what I claim is:—

1. An apparatus of the class described comprising in combination, a tank, a pump, an intake pipe for said pump leading into said tank, a discharge conduit leading from said pump having an injector therein, a container, a connection leading from said injector to said container, a lubricant supply reservoir carried by said tank and means for operating said pump to decrease the pressure within said container, said means being operable to dispense lubricant from said lubricant supply reservoir.

2. In a flushing device of the class described the combination of a tank, a pump having an intake pipe leading into said tank, a discharge pipe for said pump also leading into said tank, a container supported by said tank, an injector in said discharge pipe, a conduit leading from said discharge pipe at a point adjacent said injector and connected with said container and a second conduit leading from said discharge pipe between said injector and pump, a lubricant supply reservoir carried by said tank and means operated by said pump for dispensing lubricant therefrom.

3. A flushing device of the character described comprising a tank, a cover for said tank, a container supported by said cover, a pump, a motor for driving said pump, an intake pipe for said pump connected with the interior of said tank, a discharge pipe for said pump delivering into said tank and having an injector therein, a conduit leading from said discharge pipe at a point adjacent said injector and connected with said container, a second conduit leading from said discharge pipe between said injector and pump and having a nozzle at its outer end adapted for insertion into a gear casing, a third conduit leading from said container and also adapted for insertion into a gear casing, a lubricant supply reservoir and means associated with said motor and pump for dispensing lubricant therefrom in predetermined quantities.

4. A motor vehicle service station unit comprising means for delivering a cleaning fluid under pressure to a casing to be cleaned including line for withdrawing the diluted or dirty lubricant from the casing being cleaned and means operatively associated with said first mentioned means for delivering a clean lubricant to the casing after the same has been flushed and cleaned, said means being connected to be operated by the pressure of the cleaning fluid.

5. A combined flushing and cleaning unit and lubricant dispenser for cleaning gear casings and delivering a fresh supply of lubricant thereto comprising a tank for flushing oil, means for delivering flushing oil to the casing to be cleaned and for withdrawing the dirty lubricant therefrom, a lubricant supply reservoir and means hydraulically operated by the cleaning fluid under pressure for delivering fresh lubricant to said casing in predetermined quantities.

6. In a flushing unit and lubricant dispenser the combination of a tank, a pump, an intake pipe for said pump leading into said tank, an outlet pipe leading from said

pump and delivering into said tank, an injector in said discharge pipe, a conduit leading from said discharge pipe adjacent said injector, a second conduit leading from said discharge pipe between said injector and pump, a lubricant dispensing unit carried by said tank and operative connections between said pump and dispensing unit for dispensing lubricant therefrom in predetermined quantities.

7. A flushing and cleaning unit and lubricant dispenser comprising a tank, a pump having an intake pipe leading into said tank and a delivery pipe discharging into said tank, an injector in said discharge pipe, a container carried by said tank, a connection between said injector and container, a conduit leading from said discharge pipe between said injector and pump, means for operating said pump, a lubricant reservoir having an outlet leading therefrom, a piston in said lubricant reservoir, operative connections between said piston and pump for actuating said piston to dispense lubricant from said lubricant reservoir.

8. A flushing and cleaning unit and lubricant dispenser comprising a tank, a pump and means for operating the same, said pump having an inlet pipe connected with the interior of said tank and an outlet pipe delivering into said tank, an injector arranged within said discharge pipe, a conduit leading from said discharge pipe between said injector and pump, a container, a connection between said container and injector, a lubricant supply reservoir having a discharge outlet, a piston in said reservoir, a working cylinder having a piston therein, an operative connection between said pistons, a connection between the discharge pipe and working cylinder for actuating said pistons to discharge lubricant from said lubricant supply reservoir.

9. In a combined flushing and cleaning device and lubricant dispenser the combination of a tank, a pump and means for operating the same, said pump having an inlet pipe connected with said tank and a discharge pipe delivering into said tank, an injector arranged within said discharge pipe, a connection leading from said discharge pipe at a point adjacent said injector, a second connection leading from said discharge pipe between said injector and pump, a lubricant dispenser and an operative connection between said pump and lubricant dispenser for dispensing lubricant therefrom in predetermined quantities.

10. A combined flusher and lubricant dispenser comprising a tank, a cover for said tank, a container carried by said cover, a pump carried by said cover and having an intake pipe leading into said tank and a discharge pipe delivering into said tank, an injector in said discharge pipe, a connection between said injector and container, a connection leading from said discharge pipe between said injector and pump, a working cylinder carried by said cover, a lubricant reservoir carried by said cover and having a dispensing outlet, a piston in said working cylinder, a piston in said reservoir, means connecting said pistons and a connection between said discharge pipe and working cylinder for actuating the piston therein to dispense lubricant from said lubricant supply reservoir and means associated with said lubricant reservoir whereby the lubricant may be dispensed in predetermined quantities.

11. A motor vehicle service station unit for cleaning gear casings and the like and for filling the same with a fresh supply of lubricant and comprising a tank, a pump, a suction line and a pressure line connected with said pump for circulating a cleaning fluid through the casing to be cleaned and a lubricant dispensing unit having means for maintaining the lubricant therein under pressure during the operation of the pump, said means including a cylinder supplied with cleaning fluid from said pump and a piston acted upon by the pressure of the cleaning fluid.

12. A motor vehicle service station unit for cleaning gear casings and for delivering a fresh lubricant thereto comprising a tank for flushing oil, a pump, a suction line and a pressure line connected with said pump and tank for circulating the flushing oil through the casing being cleaned and a lubricant dispensing means operated by cleaning fluid supplied by said pump and including means for delivering a fresh supply of lubricant to the casing in predetermined quantities, whereby the lubricant in said dispensing means will be continuously maintained under pressure during the operation of said pump.

13. A motor vehicle service station unit for cleaning gear casings and for delivering a fresh supply of lubricant thereto, comprising a tank for flushing oil, a pump, a container for the dirty or diluted lubricant removed from the gear casing, a suction line and a pressure line connected with said pump, tank and container for delivering flushing oil to the gear casing and for withdrawing the same therefrom and delivering it into said container, a lubricant dispensing unit and a hydraulic driving connection between said pump and dispensing unit for delivering fresh lubricant to the gear casing, said hydraulic driving connection being operative continuously to maintain the lubricant in said dispensing unit under pressure during the operation of said pump.

14. A motor vehicle service station unit for cleaning gear casings and for delivering fresh supply of lubricant thereto comprising a supply chamber for flushing oil, a delivery chamber into which dirty lubricant is

delivered, a pump, a suction line and a pressure line connected with said pump, an injector in said discharge line, a connection between said injector and delivery chamber, a connection leading from said discharge line between said injector and pump, a lubricant dispensing reservoir having a discharge connection leading therefrom and an operative connection between said pump and dispensing reservoir for dispensing lubricant therefrom.

15. A motor vehicle service station unit for cleaning gear casings and for delivering a fresh supply of lubricant thereto comprising a tank for flushing oil and a lubricant supply reservoir, a pump having a suction line and a pressure line and means operatively associated therewith for circulating a cleaning fluid through the gear casing to be cleaned, a lubricant supply reservoir having a discharge outlet connection and a piston therein and means connected with said piston and actuated by said pump for moving said piston to discharge lubricant from said dispensing unit in predetermined quantities.

16. A motor vehicle service station unit for cleaning gear cases and for delivering a fresh supply of lubricant thereto comprising a tank for flushing oil, a lubricant supply reservoir, a pump having an intake connected with said tank and a discharge pipe delivering into said tank, an injector in said discharge pipe, a connection leading from said discharge pipe at a point adjacent said injector, a connection leading from said discharge pipe between said injector and pump, a piston in said lubricant supply reservoir and a discharge connection leading therefrom, and means operated by said pump for actuating said piston to deliver fresh lubricant to the casing being cleaned.

17. A motor vehicle service station unit for cleaning gear casings and for delivering a fresh supply of lubricant thereto comprising a tank for flushing oil, a cover for said tank, a pump carried by said cover and having an inlet pipe connected with said tank and a discharge pipe delivering into said tank, an injector in said discharge pipe, a suction line leading from said discharge pipe at a point adjacent said injector, a pressure line leading from said discharge pipe between said injector and pump, a lubricant supply reservoir carried by said cover and having a piston therein and a discharge connection leading therefrom, a working cylinder carried by said cover and having a piston therein operatively connected with said first mentioned piston, a connection between the dicharge pipe of said pump and said working cylinder for operating said pistons to deliver lubricant to the gear casing in predetermined quantities.

18. A motor vehicle service station unit for cleaning gear casings and for delivering a fresh supply of lubricant thereto comprising a tank for flushing oil, a pump having an intake pipe connected with said tank and a discharge pipe delivering into said tank, an injector in said discharge pipe, a container for dirty lubricant having a connection leading therefrom, a connection between said container and injector, a connection leading from said discharge pipe between said injector and pump, a lubricant supply reservoir having a piston therein and a discharge connection leading therefrom, a piston rod connected with said piston and extending through one end of said reservoir, a driving connection between said pump and piston, an electric motor for driving said pump, a cut-out switch associated with said piston rod and means carried by said piston rod for actuating said cut-out switch to cut off said motor when a predetermined amount of lubricant has been dispensed therefrom.

19. A motor vehicle service station unit for cleaning gear casings and for delivering a fresh supply of lubricant thereto, comprising a tank for flushing oil, a cover for said tank, a pump carried by said cover and having an inlet pipe connected with said tank and a discharge pipe discharging into said tank, an electric motor carried by said cover and operatively connected with said pump, a container for dirty lubricant carried by said cover, an injector in said discharge pipe, a connection between said injector and said container, a suction line leading from said container, a pressure line leading from said discharge pipe between said injector and pump, a lubricant supply reservoir carried by said cover and having a piston therein and a discharge outlet, a working cylinder arranged within said tank and having a piston therein connected with the piston in said lubricant supply reservoir, a connection between said discharge pipe and working cylinder for actuating said pistons, the piston in said lubricant supply reservoir having a piston rod extending through the end thereof, a cut-out switch positioned adjacent said piston rod, means adjustably connected with said piston rod and adapted to actuate said cut-out switch to cut off said motor when a predetermined amount of lubricant has been dispensed from said lubricant supply reservoir.

In testimony whereof, I hereunto affix my signature.

AUSTIN L. WERTZ.