IN THE UNITED STATES DISTRICT COURT
DISTRICT OF DELAWARE

FUEL AUTOMATION STATION, LLC	§	
	§	
Plaintiff,	§	**Civil Action No. _____**
	§	
v.	§	
	§	
COMANCHE GAS SOLUTIONS, LLC	§	**JURY TRIAL DEMANDED**
	§	
Defendant.	§	
	§	

COMPLAINT FOR PATENT INFRINGEMENT

This is an action for patent infringement in which Plaintiff, Fuel Automation Station, LLC ("FAS"), complains against Defendant, Comanche Gas Solutions, LLC ("Comanche"), and alleges as follows:

PARTIES

1. FAS is a limited liability company organized and existing under the laws of the State of Michigan, with a principal office at 24501 Ecorse Road, Taylor, Michigan, 48180.

2. FAS is comprised of one member, Simon Group Holdings I, LLC, which is organized under the laws of the State of Michigan and has its principal place of business within the State of Michigan.

3. The sole member of Simon Group Holdings I, LLC is the Sam R. Simon Trust. The sole trustee and beneficiary of the Sam R. Simon Trust is Sam R. Simon, a Michigan resident.

4. Comanche is a limited liability company organized and existing under the laws of the State of Delaware, with a principal office at 303 Industrial Boulevard, Comanche, Texas 76442.

5. On information and belief, the sole member of Comanche is Michael Brown, a

Kansas resident.

JURISDICTION AND VENUE

6. This Court has original subject matter jurisdiction over the claims in this action pursuant to 28 U.S.C. § 1331 (federal question), § 1332 (diversity), and § 1338 (patents).

7. Comanche is subject to personal jurisdiction in this Court because Comanche is incorporated in Delaware.

8. Venue is proper in this judicial district as to Comanche under 28 U.S.C. § 1391(b)(1) and (c)(2) and 28 U.S.C. § 1400(b).

BACKGROUND

9. FAS manufactures and provides services related to an automated frac fuel delivery system known as the Fuel Automation Station ("FAS Equipment").

10. The FAS Equipment is engineered to fuel multiple pieces of fracking equipment simultaneously, boosting operational efficiency while eliminating spills, hazards and downtime.

11. FAS protected its technology by filing patent applications, resulting in the issuance of patents related to this technology.

12. FAS commercializes products that practice the inventions claimed in the asserted patent.

13. Comanche is a competitor of FAS and is also in the business of providing services related to an automated frac fuel delivery system, as shown in its website:

Diesel Auto Fueler

Introducing the Comanche Automated Fueling System. Paired with our Dual Fuel Natural Gas Distribution Equipment and Services, the Automated Fueling System creates more diesel savings by eliminating fuel markups, reducing overall service rates, and optimized displacement.

Click here to download our brochure

Distribution Systems

Our Distribution Systems are specifically designed and manufactured in house. They are designed to safely and efficiently deliver natural gas to the frac pumps on location. Our system has the ability to be plumbed into a pipeline on site to fuel and service an entire frac fleet.

14. Comanche also offers a brochure through its website that explains the Comanche fuel distribution system. That brochure is attached to this Complaint as **Exhibit 1**.

15. The fuel distribution system shown in Exhibit 1 and made, used, and sold in the United States by Comanche includes, among other things, a mobile trailer, a pump on the trailer, manifolds on the trailer, reels on the trailer, hoses connected with the reels, valves on the trailer, fluid level sensors associated with each hose, a controller configured to open and close each valve and activate and deactivate the pump, and an aisle walkway down the middle of the mobile trailer and having reels on each side.

16. On June 18, 2021, FAS sent to Comanche a letter asking Comanche to cease using without permission the inventions set forth in these automated fueling system patents: U.S. Patent Nos. 10,815,118, 10,494,251, 10,513,426, and 10,974,955.

17. Along with that letter, FAS sent to Comanche a claim chart that compared the claims in certain of FAS's patents with Comanche's automated fueling system. That claim chart is attached as **Exhibit 6.**

18. Comanche knew of these asserted patents at least as of the date that it received this June 18, 2021 letter.

19. In that letter, FAS asked for a response by July 1, 2021.

20. Comanche did not respond to the letter by July 1, 2021.

21. As of the filing of this Complaint, Comanche had not responded to FAS's letter.

THE ASSERTED PATENTS

22. FAS is the assignee of a number of patents relating to automated fueling for fracturing systems. The asserted patents in this lawsuit are U.S. Patent Nos. 10,815,118, 10,494,251, 10,513,426, and 10,974,955.

23. On October 27, 2020, the United States Patent and Trademark Office duly and lawfully issued United States Patent No. 10,815,118 ("the '118 patent"), entitled "Mobile Distribution Station Having Sensor Communication Lines Routed With Hoses." A true and correct copy of the '118 patent is attached hereto as **Exhibit 2**.

24. The '118 patent names Ricky Dean Shock as the inventor.

25. FAS is the owner by assignment of all right, title and interest in the '118 patent.

26. On December 3, 2019, the United States Patent and Trademark Office duly and lawfully issued United States Patent No. 10,494,251 ("the '251 patent"), entitled "Mobile Distribution Station With Aisle Walkway." A true and correct copy of the '251 patent is attached hereto as **Exhibit 3**.

27. The ‘251 patent names Ricky Dean Shock as the inventor.

28. FAS is the owner by assignment of all right, title and interest in the ‘251 patent.

29. On December 24, 2019, the United States Patent and Trademark Office duly and lawfully issued United States Patent No. 10,513,426 (“the ‘426 patent”), entitled “Mobile Distribution Station With Fail-Safes.” A true and correct copy of the ‘426 patent is attached hereto as **Exhibit 4**.

30. The ‘426 patent names Ricky Dean Shock as the inventor.

31. FAS is the owner by assignment of all right, title and interest in the ‘426 patent.

32. On April 13, 2021, the United States Patent and Trademark Office duly and lawfully issued United States Patent No. 10,974,955 (“the ‘955 patent”), entitled “Mobile Distribution Station For Fluid Dispensing.” A true and correct copy of the ‘955 patent is attached hereto as **Exhibit 5**.

33. The ‘955 patent names Ricky Dean Shock as the inventor.

34. FAS is the owner by assignment of all right, title and interest in the ‘955 patent.

COUNT I
(DIRECT INFRINGEMENT OF U.S. PATENT NO. 10,815,118)

35. FAS incorporates by reference all of the preceding paragraphs as though fully set forth herein.

36. Comanche has directly infringed, literally or under the doctrine of equivalents, at least claim 1 of the ‘118 patent by making, using, selling, offering to sell and/or importing into the United States, without authority, its automated fueling system described in Exhibit 1.

COUNT II
(DIRECT INFRINGEMENT OF U.S. PATENT NO. 10,494,251)

37. FAS incorporates by reference all of the preceding paragraphs as though fully set

forth herein.

38. Comanche has directly infringed, literally or under the doctrine of equivalents, at least claims 1 and 11 of the '251 patent by making, using, selling, offering to sell and/or importing into the United States, without authority, its automated fueling system described in Exhibit 1.

39. An exemplary claim chart based upon publicly available information illustrating how Comanche's system meets each and every limitation of claim 1 of the '251 patent is attached as Exhibit 6.

COUNT III
(DIRECT INFRINGEMENT OF U.S. PATENT NO. 10,513,426)

40. FAS incorporates by reference all of the preceding paragraphs as though fully set forth herein.

41. Comanche has directly infringed, literally or under the doctrine of equivalents, at least claims 1 and 11 of the '426 patent by making, using, selling, offering to sell and/or importing into the United States, without authority, its automated fueling system described in Exhibit 1.

COUNT IV
(DIRECT INFRINGEMENT OF U.S. PATENT NO. 10,974,955)

42. FAS incorporates by reference all of the preceding paragraphs as though fully set forth herein.

43. Comanche has directly infringed, literally or under the doctrine of equivalents, at least claims 1 and 11 of the '955 patent by making, using, selling, offering to sell and/or importing into the United States, without authority, its automated fueling system described in Exhibit 1.

DEMAND FOR JURY TRIAL

44. FAS requests a trial by jury on all claims and issues triable by jury.

PRAYER FOR RELIEF

FAS and Comanche are competitors. FAS has suffered substantial damages and will suffer severe and irreparable harm as a result of Comanche's infringement, unless that infringement is enjoined by this Court. The threatened injury to FAS outweighs any harm that an injunction may cause to Comanche. Injunctive relief would not disserve the public interest under these circumstances.

FAS requests that the Court enter judgment in its favor against Comanche and grant the following relief:

A. A declaration that Comanche has infringed one or more claims of the '118, '251, '426, and '955 patents;

B. A permanent injunction preventing Comanche, as well as its officers, directors, agents, servants, assigns, and those in active concert and participation with any of them from infringing the '118, '251, '426, and '955 patents.

C. A ruling that this case be found exceptional under 35 U.S.C. § 285, and a judgment awarding FAS its reasonable attorneys' fees and costs incurred in prosecuting this action;

D. A judgment that requires Comanche to pay FAS damages under 35 U.S. C. 284, including supplemental damages for any continuing post-verdict infringement until the entry of final judgment, with an accounting as necessary;

E. A judgment that Comanche's infringement is willful and award FAS enhanced damages under 35 U.S.C. § 284, up to and including trebling FAS's damages, based on Comanche's willful infringement of the '118, '251, '426, and '955 patents.

F. A judgment and order requiring that in the event a permanent injunction preventing further acts of infringement is not granted, that Frac Shack be awarded a compulsory ongoing licensing fee;

G. A judgment awarding FAS costs under 28 U.S.C. § 1920; and,

H. Such other legal and equitable relief to which FAS is entitled or which the Court deems just and proper.

Respectfully Submitted,

DATED: July 9, 2021

GELLERT SCALI BUSENKELL & BROWN, LLC

/s/ Charles J. Brown, III

Charles J. Brown, III (DE 3368)
1201 N. Orange Street, Suite 300
Wilmington DE 19801
Telephone:302-425-5800
cbrown@gsbblaw.com

and

CARLSON, GASKEY & OLDS, PC
Steven Susser, Esq. (to be admitted *pro hac vice*)
Alex Szypa, Esq. (to be admitted *pro hac vice*)
400 W. Maple Rd., Suite 350
Birmingham, MI 48009
Telephone: (248) 988-8360
Facsimile: (248) 988-8363
ssusser@cgolaw.com
aszypa@cgolaw.com

EXHIBIT 1

COMANCHE
GAS SOLUTIONS LLC.

DRIVING INNOVATION IN DUAL FUEL OILFIELD SERVICES

- **DUAL FUEL NATURAL GAS DISTRIBUTION SYSTEM**
- **AUTOMATED DIESEL FUELING SYSTEM**
- **FLUID WEIGHT TANK LEVEL SENSOR**
- **ENHANCED SAFETY FAULTS**

303 Industrial Blvd.
Comanche, TX 76442
325-455-3205
http://comanchegas.com

YOUR PARTNER FOR SUCCESS IN DUAL FUEL OILFIELD SERVICES.

As the leader in the dual fuel industry, Comanche Gas Solutions sees an opportunity to leverage natural gas distribution and diesel automated fueling technology to fundamentally change the way we fuel frac fleets. We bring innovative solutions to the market that provide better service and significant savings to our clients. These improvements streamline fueling operations and make safer, more cost-effective outcomes.

SERVICE

We provide an Automated Fueling System (AFS) and a Natural Gas Distribution System backed with professional support. The AFS has 27 hose reels per unit to accommodate horsepower. The AFS dispenses dyed diesel to the pumps, pump down units, and blenders. The Total Package Solution provides one Technician and one Diesel Operator with a Supervisor operating 24/7/365.

AUTOMATED FUELING SYSTEM

Comanche Gas Solutions sets a new standard in the oil & gas industry with disruptive technology. The AFS is a modular, self-contained, and mobile unit designed to increase efficiency, safety, and environmental integrity. The system allows for consistent fuel supply on the frac pad without the intense danger of fuel spray.

OPERATIONS

At Comanche Gas Solutions, our oil field services take advantage of value-based systems, combined with our in-depth understanding of displacement. Our field technicians provide service that better optimizes dual fuel equipped frac fleets. The AFS allows our customers to realize immediate diesel displacement data.

GENERATE GREATER WELL COMPLETION EFFICIENCIES

Introducing the Comanche Automated Fueling System. Paired with our Dual Fuel Natural Gas Distribution Equipment and Services, the Automated Fueling System creates more diesel savings by eliminating fuel markups, reducing overall service rates, and optimized displacement.

SUCCESS IN THE OIL AND GAS INDUSTRY IS MEASURED BY PERFORMANCE, PRODUCTION AND PROFITS.

MAXIMIZE DIESEL SAVINGS

The total fuel solution presents savings in the following three ways:

1. Comanche dual fuel kits, natural gas distribution services, and gas conditioning offer up to 50% displacement. Thus, diesel expenses are reduced.
2. Best-in-class service pricing. Packaged with our natural gas distribution services, we aim to reduce overall dual fuel service rates by 20%.
3. Since Comanche is not a fuel supply and logistics service company, Comanche Gas Solutions intends to eliminate diesel mark-ups. Fuel supply companies upcharge $0.20/gallon over rack price. Therefore, Comanche's Total Fuel Solution removes any margin placed on diesel and diesel exhaust fluid. Diesel provider contract is necessary.

OPERATIONAL EXCELLENCE

Comanche Gas Solutions' dedicated team members are committed to providing smarter frac site fueling. Our technicians are equipped to ensure best efficiency and safety standards. We understand the needs of the frac site to increase pumping hours and reduce operating expenses. The Total Fuel Package includes automatic dyed diesel fueling, computerized tracking by stage, autonomous clear diesel and diesel exhaust fluid fueling, and 24 hour a day experienced personnel. Safety is part of our mission. Comanche Gas Solutions AFS is fully open ended and prevents fuel sprays. The AFS monitors tank level rise, ambient temperature, and fuel line breakaways. The total fuel service package supplies consistent cost-effective fuel supply and consists of enhanced features to prevent spills.

DIESEL DISPENSED via PLC-DRIVEN SYSTEM

The Comanche Gas Solutions Automated Fueling System (AFS) dispenses dyed diesel automatically via a PLC-driven system to pumping equipment. The dyed diesel fuel is dispersed through an electrical ball valve, located on each reel inside the AFS. Each reel is equipped with a flow meter for frac pump fuel management. The fuel tank sensors utilize wireless telemetry to communicate with the AFS that the tank has reached the appropriate fill level. When the tank reaches 20% fuel capacity, the AFS delivers dyed diesel by using two one-horsepower motors through the fuel line. When the tank depth achieves 70% fuel capacity, the AFS closes the electric ball valve and stops dispensing fuel.

FLUID WEIGHT TANK LEVEL SENSOR

The tank level sensor utilizes a proprietary technology that measures weight/fluid volume in the diesel tank which is transmitted back to the command center via radio signal. The tank level sensor is flexible and fits in almost any frac pump diesel tank. Unlike other float measurement tank sensors, the Comanche tank level sensor has improved measurement accuracy and does not experience mechanical failures that lead to overflow.

ENHANCED SAFETY FAULTS

The AFS concurrently monitors the sensor for a rise in tank level. The AFS includes over 100 alarms and safety features. If the PLC detects tank levels above a preset maximum, senses a drop below a preset minimum, loses signal, realizes a change of state, or perceives a fuel line breakaway, the AFS faults and stops delivering fuel. If the temperature rises above 220 degrees Fahrenheit at any of the tank sensors, the AFS interprets the high ambient temperature as a fire and shuts down the entire fueling unit. The fuel lines are fully open ended. If a hose is cut, the fuel lines do not spray pressurized diesel into the air.

ALONG WITH INCREASED QUALITY OF SERVICE, TOP TIER SAFTEY REMAINS OUR ULTIMATE PRIORITY.

ADDITIONAL SAFETY FEATURES

- Command center is equipped with two Emergency Stop Push Buttons (ESD).
- The AFS has auto fire suppression system in command center that can be activated manually.
- Preset tank depth maximum to prevent overflow.
- Breakaway sensing capability detects fuel lines that are pulled away by accident.
- AFS comes equipped with camera system in the control room.

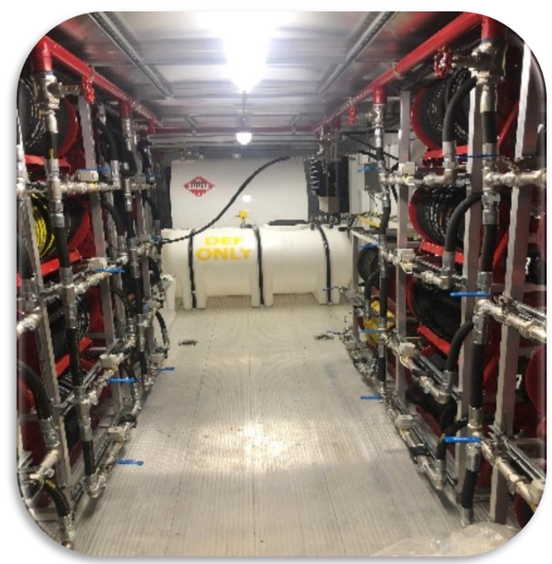

EXHIBIT 2

US010815118B2

(12) **United States Patent**
Shock

(10) **Patent No.: US 10,815,118 B2**
(45) **Date of Patent: *Oct. 27, 2020**

(54) **MOBILE DISTRIBUTION STATION HAVING SENSOR COMMUNICATION LINES ROUTED WITH HOSES**

(71) Applicant: **Fuel Automation Station, LLC**, Birmingham, MI (US)

(72) Inventor: **Ricky Dean Shock**, Victoria, TX (US)

(73) Assignee: **FUEL AUTOMATION STATION, LLC**, Birmingham, MI (US)

(*) Notice: Subject to any disclaimer, the term of this patent is extended or adjusted under 35 U.S.C. 154(b) by 88 days.

This patent is subject to a terminal disclaimer.

(21) Appl. No.: **16/148,403**

(22) Filed: **Oct. 1, 2018**

(65) **Prior Publication Data**

US 2019/0031496 A1 Jan. 31, 2019

Related U.S. Application Data

(63) Continuation of application No. 15/290,304, filed on Oct. 11, 2016, now Pat. No. 10,087,065.

(51) **Int. Cl.**
B67D 7/04 (2010.01)
B67D 7/46 (2010.01)
(Continued)

(52) **U.S. Cl.**
CPC ***B67D 7/465*** (2013.01); ***B67D 7/04*** (2013.01); ***B67D 7/40*** (2013.01); ***B67D 7/845*** (2013.01); *B67D 2210/0006* (2013.01)

(58) **Field of Classification Search**
CPC B67D 7/465; B67D 7/40; B67D 7/845; B67D 2210/0006
(Continued)

(56) **References Cited**

U.S. PATENT DOCUMENTS

2,340,070 A 1/1944 McCauley et al.
2,516,150 A 7/1950 Samiran
(Continued)

FOREIGN PATENT DOCUMENTS

DE 1147397 4/1963
DE 20106400 10/2001
(Continued)

OTHER PUBLICATIONS

Shimazaki, H. (1986). Development of centralized fueling and management system of kerosene heating machine. Nisseki Technical Review, vol. 28(4). Jul. 1986. pp. 184-188.
(Continued)

Primary Examiner — Nicolas A Arnett
(74) *Attorney, Agent, or Firm* — Carlson, Gaskey & Olds, P.C.

(57) **ABSTRACT**

A distribution station includes a mobile trailer, a pump, a manifold connected with the pump, reels, flow passages connected to the manifold and running through the reels, hoses, connected the flow passages via the reels, valves situated between the manifold and the reels and operable to control fluid flow through the flow passages, fluid level sensors connected or connectable with the hoses, and a controller configured to operate the valves responsive to fluid level thresholds to control fluid flow to the hoses.

18 Claims, 4 Drawing Sheets

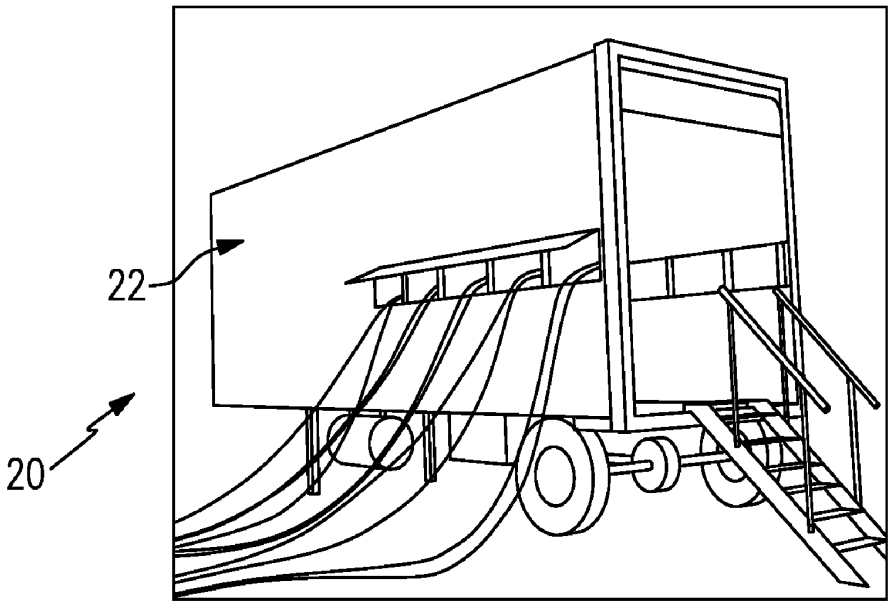

(51) **Int. Cl.**
B67D 7/40 (2010.01)
B67D 7/84 (2010.01)

(58) **Field of Classification Search**
USPC 141/94–95, 231
See application file for complete search history.

(56) **References Cited**

U.S. PATENT DOCUMENTS

2,769,572	A	11/1956	Harman et al.	
2,777,461	A	1/1957	Wildhaber	
2,966,921	A	1/1961	Whiteman	
3,028,010	A	4/1962	Headrick	
3,136,295	A	6/1964	Gramo	
3,547,141	A	12/1970	Alexander	
3,605,798	A	9/1971	Green et al.	
3,618,643	A	11/1971	Thomson	
3,625,399	A	12/1971	Heisler	
3,677,284	A	7/1972	Mendez	
3,881,509	A	5/1975	Newton	
4,139,019	A	2/1979	Bresie et al.	
4,284,210	A	8/1981	Horak	
4,511,311	A	4/1985	Olson	
4,591,115	A	5/1986	DeCarlo	
4,651,788	A	3/1987	Grosskreuz et al.	
4,728,005	A	3/1988	Jacobs et al.	
4,930,665	A	6/1990	Devine	
5,406,988	A	4/1995	Hopkins	
5,454,408	A	10/1995	DiBella et al.	
5,465,766	A	11/1995	Siegele et al.	
5,503,199	A	4/1996	Whitley, II et al.	
5,538,051	A	7/1996	Brown et al.	
5,551,309	A	9/1996	Goossens et al.	
5,651,400	A	7/1997	Corts et al.	
5,660,358	A	8/1997	Grafwallner et al.	
5,708,424	A	1/1998	Orlando et al.	
5,749,339	A	5/1998	Graham et al.	
5,887,567	A	3/1999	White	
5,927,603	A	7/1999	McNabb	
5,884,675	A	12/1999	Krasnov	
6,098,646	A	8/2000	Hennemann et al.	
6,206,056	B1	3/2001	Lagache	
6,564,615	B1	5/2003	Carter	
6,601,000	B1	7/2003	Barlian et al.	
6,651,706	B2	11/2003	Litt	
6,697,705	B2	2/2004	Johnson et al.	
6,745,801	B1	6/2004	Cohen	
6,755,225	B1	6/2004	Niedwiecki et al.	
6,761,194	B1	7/2004	Blong	
6,779,569	B1	8/2004	Teer, Jr. et al.	
6,786,245	B1	9/2004	Eichelberger et al.	
7,063,276	B2	6/2006	Newton	
7,106,026	B2	9/2006	Moore	
7,353,808	B2	4/2008	Kakoo	
7,415,995	B2	8/2008	Plummer et al.	
7,458,543	B2	12/2008	Cutler et al.	
7,568,507	B2	8/2009	Farese et al.	
7,602,143	B2	12/2009	Capizzo	
7,628,182	B2	12/2009	Poulter	
7,937,215	B2	5/2011	Humphrey	
7,938,151	B2	5/2011	Hockner	
8,069,885	B2	12/2011	Kederer	
8,448,750	B2	5/2013	Gaugush et al.	
9,346,662	B2	5/2016	Van Vliet et al.	
9,371,830	B2	6/2016	Moffitt, Jr.	
9,371,831	B2	6/2016	Moffitt, Jr.	
9,434,598	B2	9/2016	Pick	
9,586,805	B1	3/2017	Shock	
9,725,295	B2	8/2017	McKay	
9,790,080	B1 *	10/2017	Shock	B67D 7/3272
9,815,683	B1 *	11/2017	Kalala	B67D 7/362
9,981,840	B2 *	5/2018	Shock	B67D 7/465
10,087,065	B2 *	10/2018	Shock	B67D 7/465
10,150,662	B1 *	12/2018	Shock	B67D 7/74
10,196,258	B2 *	2/2019	Kalala	B67D 7/40
10,289,126	B2 *	5/2019	Shock	G05D 9/12
10,303,190	B2 *	5/2019	Shock	G05D 9/12
10,442,676	B1 *	10/2019	Walther	B65H 75/4478
10,513,426	B2 *	12/2019	Shock	B67D 7/3218
2001/0017815	A1	8/2001	Ackermann et al.	
2004/0163731	A1	8/2004	Eichelberger	
2004/0187950	A1	9/2004	Cohen	
2005/0109561	A1	5/2005	Chopra	
2007/0079891	A1	4/2007	Farese et al.	
2007/0164031	A1	7/2007	Holz	
2007/0181212	A1	8/2007	Fell	
2011/0197988	A1	8/2011	Van Vliet	
2016/0076533	A1	3/2016	Moffitt, Jr.	
2019/0119096	A1 *	4/2019	Haile	B67D 7/0401

FOREIGN PATENT DOCUMENTS

DE	10309307	9/2004
DE	102006025025	12/2006
DE	102006038652	2/2008
EP	0161042	11/1985
EP	0433041	6/2001
GB	2485832	5/2012
RU	28347	3/2003
RU	91135	1/2010
RU	2452668	1/2012
SU	949644	8/1982
WO	0177006	10/2001
WO	03029721	4/2003
WO	03093118	11/2003
WO	2006005686	1/2006
WO	2006116572	11/2006
WO	2007087849	8/2007
WO	2008083830	7/2008
WO	2009026607	3/2009
WO	20090608065	6/2009

OTHER PUBLICATIONS

Technical Document. Surface vehicle standard. SAE International. Sep. 2014. pp. 1-5.

Oilfield Business: Technologies. Frac Shack Inc. introduces world's first Bi-Fuel Distribution Unit for hydraulic fracturing industry. Texas Oil & Gas: The National Magazine for Oil & Gas in Texas. vol. 4, Issue 2. 2015. p. 27.

Frac Shack International. Publications & Endorsements. Retrieved Aug. 23, 2016 from: http://www.fracshack.com.

Frac Shack International. Technology. Retrieved Aug. 23, 2016 from: http://www.fracshack.com.

Frac Shack International. Design Benefits. Retrieved Aug. 23, 2016 from: http://www.fracshack.com.

Frac Shack International. Service. Retrieved Aug. 23, 2016 from: http://www.fracshack.com.

Frac Shack International. Frac Shack Series—Series A. Retrieved Aug. 23, 2016 from: http://www.fracshack.com.

Frac Shack International. Frac Shack Series—Series B. Retrieved Aug. 23, 2016 from: http://www.fracshack.com.

Frac Shack International. Frac Shack Series—Series C. Retrieved Aug. 23, 2016 from: http://www.fracshack.com.

Frac Shack International. Frac Shack Series—Series D. Retrieved Aug. 23, 2016 from: http://www.fracshack.com.

Frac Shack International. Frac Shack Series—Series E. Retrieved Aug. 23, 2016 from: http://www.fracshack.com.

Frac Shack International. Frac Shack Series—Series EG. Retrieved Aug. 23, 2016 from: http://www.fracshack.com.

Mann Tek. Dry Disconnect Couplings. Retrieved Jul. 22, 2016 from: http://www.manntek.com/products/drydisconnectcouplings p. 1-4.

Mann Tek. Dry Aviation Couplings. Retrieved Jul. 22, 2016 from: http://www.manntek.com/products/dryaviationcouplings p. 1-4.

Waterman, J. (2013). Better Safe than Sorry: Frac Shack a welcome addition to the oil patch. Jan. 2, 2013. Retrieved Aug. 23, 2016 from: http://www.pipelinenewsnorth.ca/better-safe-than-sorry-1.1123066.

* cited by examiner

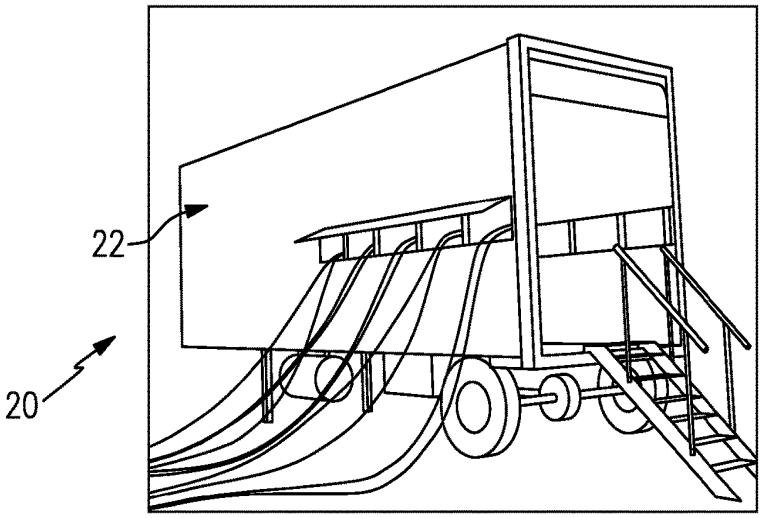
22
20

FIG.1

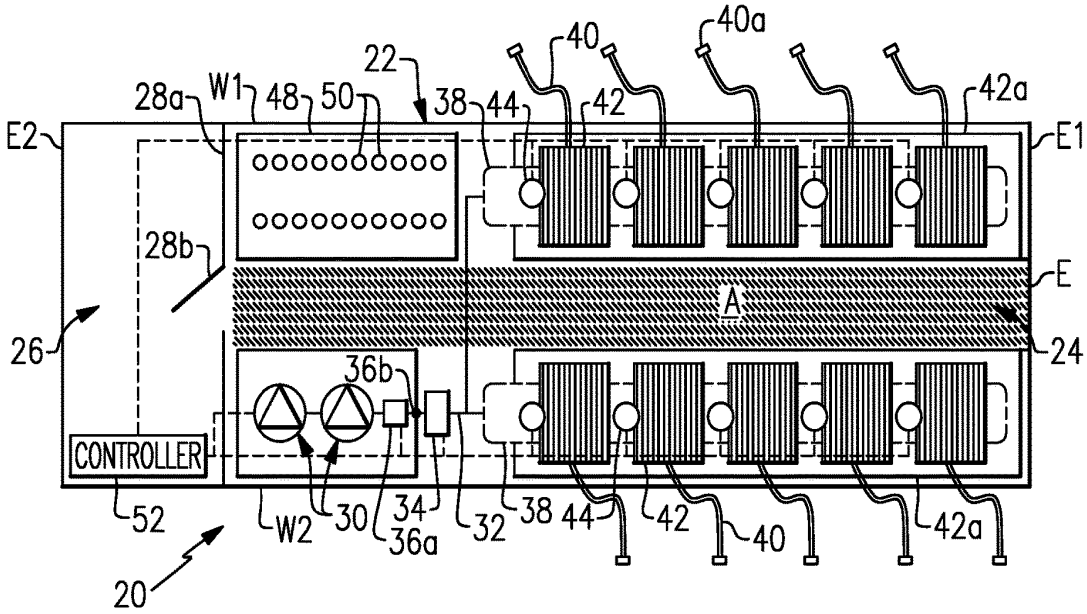
40
40a
22
28a
W1
48
50
38
44
42
42a
E2
E1
28b
E
A
26
24
36b
CONTROLLER
52
W2
30
34
36a
32
38
44
42
40
42a
20

FIG.2

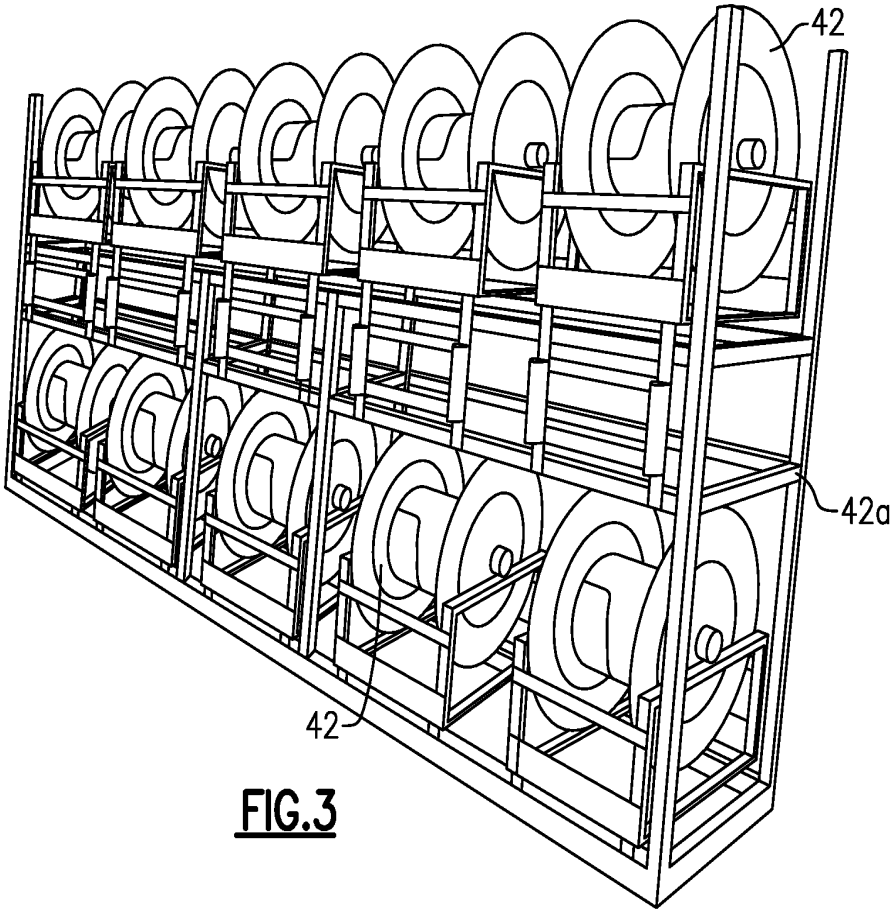

FIG.3

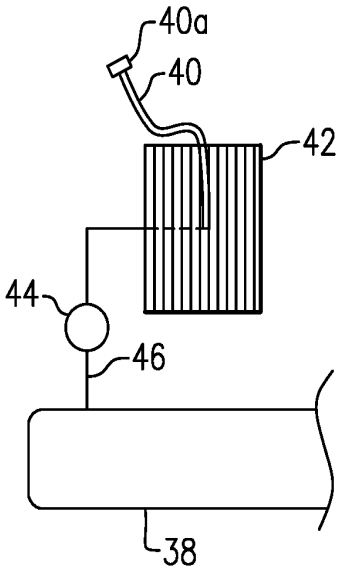

FIG.4

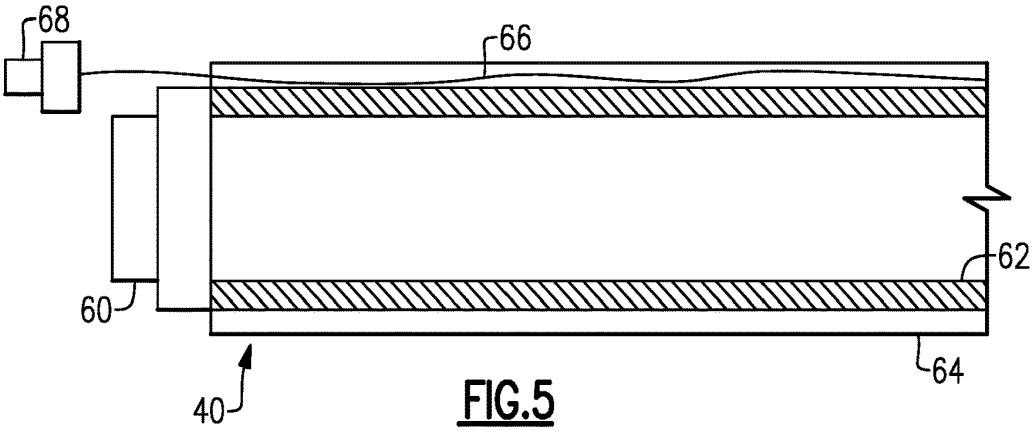

FIG.5

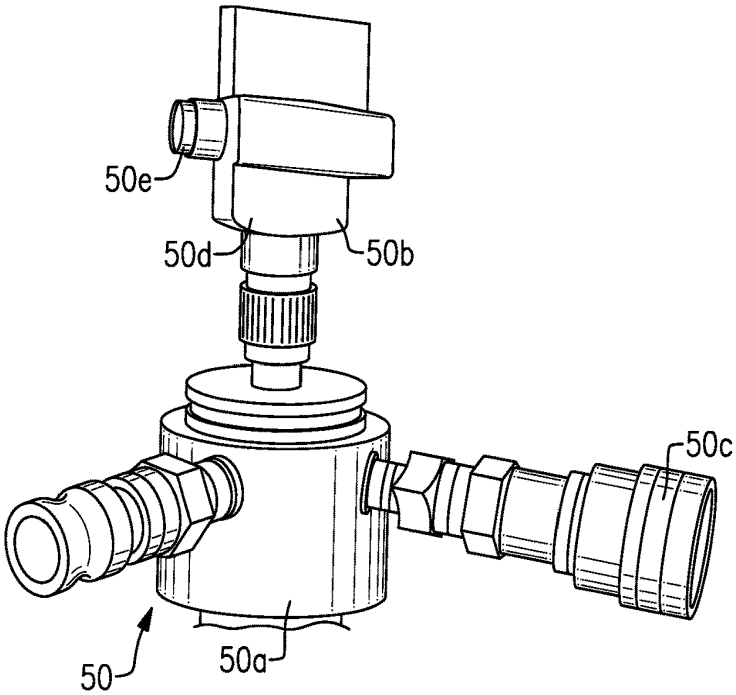

FIG.6

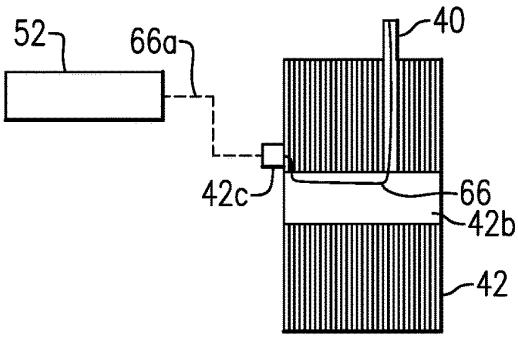

FIG.7

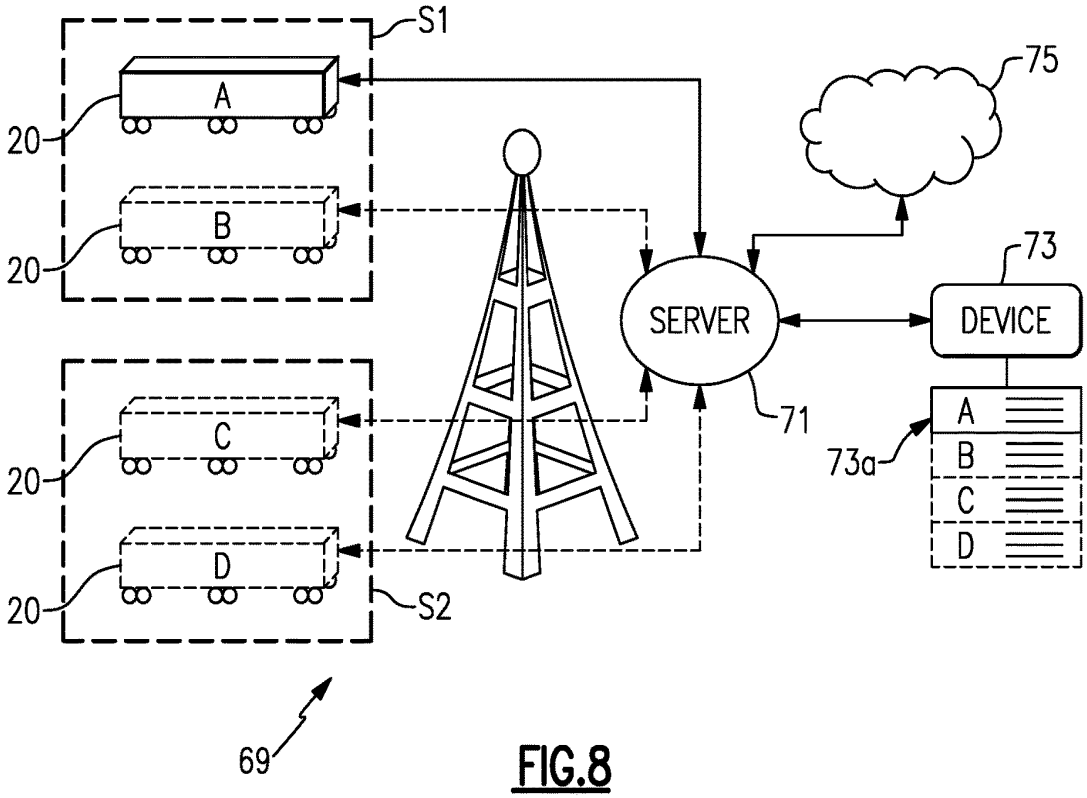

FIG.8

MOBILE DISTRIBUTION STATION HAVING SENSOR COMMUNICATION LINES ROUTED WITH HOSES

CROSS-REFERENCE TO RELATED APPLICATION

The present disclosure is a continuation of U.S. patent application Ser. No. 15/290,304 filed Oct. 11, 2016.

BACKGROUND

Hydraulic fracturing (also known as fracking) is a well-stimulation process that utilizes pressurized liquids to fracture rock formations. Pumps and other equipment used for hydraulic fracturing typically operate at the surface of the well site. The equipment may operate until refueling is needed, at which time the equipment may be shut-down for refueling. Shut-downs are costly and reduce efficiency. More preferably, to avoid shut-downs fuel is replenished in a hot-refueling operation while the equipment continues to run. This permits fracking operations to proceed continuously. However, hot-refueling can be difficult to reliably sustain for the duration of the fracking operation.

SUMMARY

A distribution station according to an example of the present disclosure includes a mobile trailer, a pump, a manifold connected with the pump, reels, flow passages connected to the manifold and running through the reels, hoses, connected the flow passages via the reels, valves situated between the manifold and the reels and operable to control fluid flow through the flow passages, fluid level sensors connected or connectable with the hoses, and a controller configured to operate the valves responsive to fluid level thresholds to control fluid flow to the hoses.

BRIEF DESCRIPTION OF THE DRAWINGS

The various features and advantages of the present disclosure will become apparent to those skilled in the art from the following detailed description. The drawings that accompany the detailed description can be briefly described as follows.

FIG. **1** illustrates an example mobile distribution station.

FIG. **2** illustrates an internal layout of a mobile distribution station.

FIG. **3** illustrates an isolated view of hose reels on a support rack used in a mobile distribution station.

FIG. **4** illustrates an example of a connection between a manifold, a control valve, and a reel.

FIG. **5** illustrates a sectioned view of an example hose for a mobile distribution station.

FIG. **6** illustrates an example of an integrated cap sensor for a mobile distribution station.

FIG. **7** illustrates an example of the routing of a sensor communication line through a reel in a mobile distribution station.

FIG. **8** illustrates a system that can be used to remotely monitor and manage one or more mobile distribution stations.

DETAILED DESCRIPTION

FIG. **1** illustrates a mobile distribution station **20** and FIG. **2** illustrates an internal layout of the station **20**. As will be

described, the station **20** may serve in a "hot-refueling" capacity to distribute fuel to multiple pieces of equipment while the equipment is running, such as fracking equipment at a well site. As will be appreciated, the station **20** is not limited to applications for fracking or for delivering fuel. The examples herein may be presented with respect to fuel delivery, but the station **20** may be used in mobile delivery of other fluids, in other gas/petroleum recovery operations, or in other operations where mobile refueling or fluid delivery will be of benefit.

In this example, the station **20** includes a mobile trailer **22**. Generally, the mobile trailer **22** is elongated and has first and second opposed trailer side walls W**1** and W**2** that join first and second opposed trailer end walls E**1** and E**2**. Most typically, the trailer **22** will also have a closed top (not shown). The mobile trailer **22** may have wheels that permit the mobile trailer **22** to be moved by a vehicle from site to site to service different hot-refueling operations. In this example, the mobile trailer **22** has two compartments. A first compartment **24** includes the physical components for distributing fuel, such as diesel fuel, and a second compartment **26** serves as an isolated control room for managing and monitoring fuel distribution. The compartments **24**/**26** are separated by an inside wall **28***a* that has an inside door **28***b*.

The first compartment **24** includes one or more pumps **30**. Fuel may be provided to the one or more pumps **30** from an external fuel source, such as a tanker truck on the site. On the trailer **22**, the one or more pumps **30** are fluidly connected via a fuel line **32** with a high precision register **34** for metering fuel. The fuel line **32** may include, but is not limited to, hard piping. In this example, the fuel line **32** includes a filtration and air eliminator system **36***a* and one or more sensors **36***b*. Although optional, the system **36***a* is beneficial in many implementations, to remove foreign particles and air from the fuel prior to delivery to the equipment. The one or more sensors **36***b* may include a temperature sensor, a pressure sensor, or a combination thereof, which assist in fuel distribution management.

The fuel line **32** is connected with one or more manifolds **38**. In the illustrated example, the station **20** includes two manifolds **38** that arranged on opposed sides of the compartment **24**. As an example, the manifolds **38** are elongated tubes that are generally larger in diameter than the fuel line **32** and that have at least one inlet and multiple outlets. Each hose **40** is wound, at least initially, on a reel **42** that is rotatable to extend or retract the hose **40** externally through one or more windows of the trailer **22**. Each reel **42** may have an associated motor to mechanically extend and retract the hose **40**.

As shown in an isolated view in FIG. **3**, the reels **42** are mounted on a support rack **42***a*. In this example, the support rack **42***a* is configured with upper and lower rows of reels **42**. Each row has five reels **42** such that each support rack **42***a* provides ten reels **42** and thus ten hoses **40**. There are two support racks **42***a* (FIG. **2**) arranged on opposed sides of the first compartment **24**, with an aisle (A) that runs between the support racks **42***a* from an outside door E to the inside door **28***b*. The station **20** therefore provides twenty hoses **40** in the illustrated arrangement, with ten hoses **40** provided on each side of the station **20**. As will be appreciated, fewer or additional reels and hoses may be used in alternative examples.

As shown in a representative example in FIG. **4**, each hose **40** is connected to a respective one of the reels **42** and a respective one of a plurality of control valves **44**. For example, a secondary fuel line **46** leads from the manifold **38** to the reel **42**. The control valve **44** is in the secondary

fuel line **46**. The control valve **44** is moveable between open and closed positions to selectively permit fuel flow from the manifold **38** to the reel **42** and the hose **40**. For example, the control valve **44** is a powered valve, such as a solenoid valve.

In the illustrated example, the first compartment **24** also includes a sensor support rack **48**. The sensor support rack **48** holds integrated fuel cap sensors **50** (when not in use), or at least portions thereof. When in use, each integrated fuel cap sensor **50** is temporarily affixed to a piece of equipment (i.e., the fuel tank of the equipment) that is subject to the hot-refueling operation. Each hose **40** may include a connector end **40***a* and each integrated fuel cap sensor **50** may have a corresponding mating connector to facilitate rapid connection and disconnection of the hose **40** with the integrated fuel cap sensor **50**. For example, the connector end **40***a* and mating connector on the integrated fuel cap sensor **50** form a hydraulic quick-connect.

At least the control valves **44**, pump or pumps **30**, sensor or sensors **36***b*, and register **34** are in communication with a controller **52** located in the second compartment **26**. As an example, the controller **52** includes software, hardware, or both that is configured to carry out any of the functions described herein. In one further example, the controller **52** includes a programmable logic controller with a touch-screen for user input and display of status data. For example, the screen may simultaneously show multiple fluid levels of the equipment that is being serviced.

When in operation, the integrated fuel cap sensors **50** are mounted on respective fuel tanks of the pieces of equipment that are subject to the hot-refueling operation. The hoses **40** are connected to the respective integrated fuel cap sensors **50**. Each integrated fuel cap sensor **50** generates signals that are indicative of the fuel level in the fuel tank of the piece of equipment on which the integrated fuel cap sensor **50** is mounted. The signals are communicated to the controller **52**.

The controller **52** interprets the signals and determines the fuel level for each fuel tank of each piece of equipment. In response to a fuel level that falls below a lower threshold, the controller **52** opens the control valve **44** associated with the hose **40** to that fuel tank and activates the pump or pumps **30**. The pump or pumps **30** provide fuel flow into the manifolds **38** and through the open control valve **44** and reel **42** such that fuel is provided through the respective hose **40** and integrated fuel cap sensor **50** into the fuel tank. The lower threshold may correspond to an empty fuel level of the fuel tank, but more typically the lower threshold will be a level above the empty level to reduce the potential that the equipment completely runs out of fuel and shuts down. The controller **52** can also be programmed with a failsafe measure related to the operation of the fuel cap sensors **50**. As an example, once a control valve **44** is open, if the controller **52** does not detect a change in fuel level from the fuel cap sensor **50** associated with the control valve **44** within a preset time period, the controller **52** shuts the pump **30** off and closes the control valve **44**. Thus, if a hose **40** were to rupture, spillage of fuel is limited to the volume of fuel in the hose **40**. For instance, the preset time period may be three seconds, six seconds, ten seconds, or fifteen seconds, which may limit spillage to approximately fifteen gallons for a given size of hose.

The controller **52** also determines when the fuel level in the fuel tank reaches an upper threshold. The upper threshold may correspond to a full fuel level of the fuel tank, but more typically the upper threshold will be a level below the full level to reduce the potential for overflow. In response to reaching the upper threshold, the controller **52** closes the respective control valve **44** and ceases the pump or pumps **30**. If other control valves **44** are open or are to be opened, the pump or pumps **30** may remain on. The controller **52** can also be programmed with an electronic stop failsafe measure to prevent over-filling. As an example, once an upper threshold is reached on a first tank and the control valve **44** is closed, but the pump **30** is otherwise to remain on to fill other tanks, if the fuel level continues to rise in the first tank, the controller **52** shuts the pump **30** off.

Multiple control valves **44** may be open at one time, to provide fuel to multiple fuel tanks at one time. Alternatively, if there is demand for fuel from two or more fuel tanks, the controller **52** may sequentially open the control valves **44** such that the tanks are refueled sequentially. For instance, upon completion of refueling of one fuel tank, the controller **52** closes the control valve **44** of the hose **40** associated with that tank and then opens the next control valve **44** to begin refueling the next fuel tank. Sequential refueling may facilitate maintaining internal pressure in the manifold and fuel line **32** above a desired or preset pressure threshold to more rapidly deliver fuel. Similarly, the controller **52** may limit the number of control valves **44** that are open at any one instance in order to maintain the internal pressure in the manifold and fuel line **32** above a desired or preset threshold. The controller **52** may perform the functions above while in an automated operating mode. Additionally, the controller **52** may have a manual mode in which a user can control at least some functions through the PLC, such as starting and stopped the pump **30** and opening and closing control valves **44**. For example, manual mode may be used at the beginning of a job when initially filling tanks to levels at which the fuel cap sensors **50** can detect fuel and/or during a job if a fuel cap sensor **50** becomes inoperable. Of course, operating in manual mode may deactivate some automated functions, such as filling at the low threshold or stopping at the high threshold.

In addition to the use of the sensor signals to determine fuel level, or even as an alternative to use of the sensor signals, the refueling may be time-based. For instance, the fuel consumption of a given piece of equipment may be known such that the fuel tank reaches the lower threshold at known time intervals. The controller **52** is operable to refuel the fuel tank at the time intervals rather than on the basis of the sensor signals, although sensor signals may also be used to verify fuel level.

The controller **52** also tracks the amount of fuel provided to the fuel tanks. For instance, the register **34** precisely measures the amount of fuel provided from the pump or pumps **30**. As an example, the register **34** is an electronic register and has a resolution of about 0.1 gallons. The register **34** communicates measurement data to the controller **52**. The controller **52** can thus determine the total amount of fuel used to very precise levels. The controller **52** may also be configured to provide outputs of the total amount of fuel consumed. For instance, a user may program the controller **52** to provide outputs at desired intervals, such as by worker shifts or daily, weekly, or monthly periods. The outputs may also be used to generate invoices for the amount of fuel used. As an example, the controller **52** may provide a daily output of fuel use and trigger the generation of an invoice that corresponds to the daily fuel use, thereby enabling almost instantaneous invoicing.

In a further example, the integrated fuel cap sensors **50** are each hard-wired to the controller **52**. The term "hard-wired" or variations thereof refers to a wired connection between two components that serves for electronic communication there between, which here is a sensor and a controller. The

hard-wiring may facilitate providing more reliable signals from the integrated fuel cap sensors **50**. For instance, the many pieces of equipment, vehicles, workers, etc. at a site may communicate using wireless devices. The wireless signals may interfere with each other and, therefore, degrade communication reliability. Hard-wiring the integrated fuel cap sensors **50** to the controller **52** facilitates reduction in interference and thus enhances reliability.

In general, hard-wiring in a hot-refueling environment presents several challenges. For example, a site has many workers walking about and typically is located on rough terrain. Thus, as will be described below, each integrated fuel cap sensor **50** is hard-wired through the associated hose **40** to the controller **52**.

FIG. **5** illustrates a representative portion of one of the hoses **40** and, specifically, the end of the hose **40** that will be located at the fuel tank of the equipment being refueled. In this example, the hose **40** includes a connector **60** at the end for detachably connecting the hose **40** to the integrated fuel cap sensors **50**. The hose **40** is formed of a tube **62** and a sleeve **64** that circumscribes the tube **62**. As an example, the tube **62** may be a flexible elastomeric tube and the sleeve **64** may be a flexible fabric sleeve. The sleeve **64** is generally loosely arranged around the tube **62**, although the sleeve **64** may closely fit on the tube **62** to prevent substantial slipping of the sleeve **64** relative to the tube **62** during use and handling. Optionally, to further prevent slipping and/or to secure the sleeve **64**, bands may be tightened around the hose **40**. As an example, one or more steel or stainless steel bands can be provided at least near the ends of the hose **40**.

A plurality of sensor communication lines **66** (one shown) are routed with or in the respective hoses **40**. For instance, each line **66** may include a wire, a wire bundle, and/or multiple wires or wire bundles. In one further example, the line **66** is a low milliamp intrinsic safety wiring, which serves as a protection feature for reducing the concern for operating electrical equipment in the presence of fuel by limiting the amount of thermal and electrical energy available for ignition. In this example, the line **66** is routed through the hose **40** between (radially) the tube **62** and the sleeve **64**. The sleeve **64** thus serves to secure and protect the line **66**, and the sleeve **64** may limit spill and spewing if there is a hose **40** rupture. In particular, since the line **66** is secured in the hose **40**, the line **66** does not present a tripping concern for workers. Moreover, in rough terrain environments where there are stones, sand, and other objects that could damage the line **66** if it were free, the sleeve **64** shields the line **66** from direct contact with such objects. In further examples, the line **66** may be embedded or partially embedded in the tube **62** or the sleeve **64**.

In this example, the line **66** extends out from the end of the hose **40** and includes a connector **68** that is detachably connectable with a respective one of the integrated fuel cap sensors **50**. For example, FIG. **6** illustrates a representative example of one of the integrated fuel cap sensors **50**. The integrated fuel cap sensor **50** includes a cap portion **50***a* and a level sensor portion **50***b*. The cap portion **50***a* is detachably connectable with a port of a fuel tank. The cap portion **50***a* includes a connector port **50***c*, which is detachably connectable with the connector **60** of the hose **40**. The sensor portion **50***b* includes a sensor **50***d* and a sensor port **50***e* that is detachably connectable with the connector **68** of the line **66**. The fuel cap sensor **50** may also include a vent port that attaches to a drain hose, to drain any overflow into a containment bucket and/or reduce air pressure build-up in a fuel tank. Thus, a user may first mount the cap portion **50***a* on the fuel tank of the equipment, followed by connecting the hose **40** to the port **50***c* and connecting the line **66** to the port **50***e*.

The sensor **50***d* may be any type of sensor that is capable of detecting fluid or fuel level in a tank. In one example, the sensor **50***d* is a guided wave radar sensor. A guided wave radar sensor may include a transmitter/sensor that emits radar waves, most typically radio frequency waves, down a probe. A sheath may be provided around the probe. For example, the sheath may be a metal alloy (e.g., stainless steel or aluminum) or polymer tube that surrounds the probe. One or more bushings may be provided between the probe and the sheth, to separate the probe from the sheath. The sheath shields the probe from contact by external objects, the walls of a fuel tank, or other components in a fuel tank, which might otherwise increase the potential for faulty sensor readings. The probe serves as a guide for the radar waves. The radar waves reflect off of the surface of the fuel and the reflected radar waves are received into the transmitter/sensor. A sensor controller determines the "time of flight" of the radar waves, i.e., how long it takes from emission of the radar waves for the radar waves to reflect back to the transmitter/sensor. Based on the time, the sensor controller, or the controller **52** if the sensor controller does not have the capability, determines the distance that the radar waves travel. A longer distance thus indicates a lower fuel level (farther away) and a shorter distance indicates a higher fuel level (closer).

The line **66** routes through the hose **40** and back to the reel **42** in the trailer **22**. For example, the line **66** is also routed or hard-wired through the reel **42** to the controller **52**. FIG. **7** illustrates a representative example of the routing in the reel **42**. In this example, the reel **42** includes a spindle **42***b* about which the reel is rotatable. The spindle **42***b* may be hollow, and the line **66** may be routed through the spindle **42***b*. The reel **42** may also include a connector **42***c* mounted thereon. The connector **42***c* receives the line **66** and serves as a port for connection with another line **66***a* to the controller **52**.

The lines **66***a* may converge to one or more communication junction blocks or "bricks" prior to the controller **52**. The communication junction blocks may serve to facilitate the relay of the signals back to the controller **52**. The communication junction blocks may alternatively or additionally serve to facilitate identification of the lines **66**, and thus the signals, with respect to which of the hoses a particular line **66** is associated with. For instance, a group of communication junction blocks may have unique identifiers and the lines **66** into a particular communication junction block may be associated with identifiers. A signal relayed into the controller **52** may thus be associated with the identifiers of the communication junction blocks and a particular line **66** of that communication junction block in order to identify which hose **40** the signal is to be associated with. The valves **44** may also communicate with the controller **52** in a similar manner through the communication junction blocks.

As can be appreciated from the examples herein, the station **20** permits continuous hot-refueling with enhanced reliability. While there might generally be a tendency to choose wireless sensor communication for convenience, a hard-wired approach mitigates the potential for signal interference that can arise with wireless. Moreover, by hard-wiring the sensors through the hoses to the controller, wired communication lines are protected from exposure and do not pose additional concerns for workers on a site.

FIG. **8** illustrates a system **69** for remotely monitoring and/or managing at least one mobile distribution station **20** (A). It is to be appreciated that the system **69** may include additional mobile distribution stations, shown in phantom at **20** (B), **20** (C), and **20** (D) (collectively mobile distribution stations **20**), for example. The mobile distribution stations **20** may be located at a single work site or located across several different work sites S**1** and S**2**. Each mobile distribution station **20** is in communication with one or more servers **71** that are remotely located from the mobile distribution stations **20** and work sites S**1**/S**2**. In most implementations, the communication will be wireless.

The server **71** may include hardware, software, or both that is configured to perform the functions described herein. The server **71** may also be in communication with one or more electronic devices **73**. The electronic device **73** is external of or remote from the mobile fuel distribution stations **20**. For example, the electronic device **73** may be, but is not limited to, a computer, such as a desktop or laptop computer, a cellular device, or tablet device. The electronic device **73** may communicate and interact in the system **69** via data connectivity, which may involve internet connectivity, cellular connectivity, software, mobile application, or combinations of these.

The electronic device **73** may include a display **73***a*, such as an electronic screen, that is configured to display the fuel operating parameter data of each of the mobile distribution stations **20**. As an example, the electronic device **73** may display in real-time the operating parameter data of each of the mobile distribution stations **20** in the system **69** to permit remote monitoring and management control of the mobile distribution stations **20**. For instance, the operating parameter data may include fuel temperature, fuel pressure, fuel flow, total amount of fuel distributed, operational settings (e.g., low and high fuel level thresholds), or other parameters.

The server **71** may also be in communication with one or more cloud-based devices **75**. The cloud-based device **75** may include one or more servers and a memory for communicating with and storing information from the server **71**.

The server **71** is configured to communicate with the mobile distribution stations **20**. Most typically, the server **71** will communicate with the controller **52** of the mobile distribution station **20**. In this regard, the controller **52** of each mobile distribution station **20** may be include hardware, software, or both that is configured for external communication with the server **71**. For example, each controller **52** may communicate and interact in the system **69** via data connectivity, which may involve internet connectivity, cellular connectivity, software, mobile application, or combinations of these.

The server **71** is configured to receive operating parameter data from the mobile distribution stations **20**. The operating parameter data may include or represent physical measurements of operating conditions of the mobile distribution station **20**, status information of the mobile distribution station **20**, setting information of the mobile distribution station **20**, or other information associated with control or management of the operation of the mobile distribution station **20**.

For example, the server **71** utilizes the information to monitor and auto-manage the mobile distribution station **20**. The monitoring and auto-management may be for purposes of identifying potential risk conditions that may require shutdown or alert, purposes of intelligently enhancing operation, or purposes of reading fuel or fluid levels in real-time via the sensors **50**. As an example, the server **71** may utilize the information to monitor or display fuel or fluid levels, or determine whether the fuel operating parameter data is within a preset limit and send a control action in response to the operating parameter data being outside the preset limit. As will described in further detail below, the control action may be a shutdown instruction to the mobile fuel distribution stations **20**, an adjustment instruction to the mobile fuel distribution stations **20**, or an alert to the electronic device **73**.

Although a combination of features is shown in the illustrated examples, not all of them need to be combined to realize the benefits of various embodiments of this disclosure. In other words, a system designed according to an embodiment of this disclosure will not necessarily include all of the features shown in any one of the Figures or all of the portions schematically shown in the Figures. Moreover, selected features of one example embodiment may be combined with selected features of other example embodiments.

The preceding description is exemplary rather than limiting in nature. Variations and modifications to the disclosed examples may become apparent to those skilled in the art that do not necessarily depart from this disclosure. The scope of legal protection given to this disclosure can only be determined by studying the following claims.

What is claimed is:

1. A distribution station comprising:

a mobile trailer;

a pump on the mobile trailer;

a manifold on the mobile trailer and connected with the pump;

a plurality of reels on the mobile trailer;

a plurality of flow passages, each said flow passage being connected to the manifold and running through a respective one of the reels;

a plurality of hoses, each said hose being connected with a respective one of the flow passages via a respective one of the reels;

a plurality of valves on the mobile trailer, each said valve situated between the manifold and a respective different one of the reels and being operable to control fluid flow through a respective one of the flow passages;

a plurality of fluid level sensors, each said fluid level sensor being connected or connectable with a respective different one of the hoses; and

a controller configured to operate the valves responsive to fluid level thresholds to control fluid flow to the hoses.

2. The distribution station as recited in claim **1**, wherein the controller is configured to determine fluid levels based on signals from the fluid level sensors and determine whether one or more of the fluid levels are below one or more of the fluid level thresholds.

3. The distribution station as recited in claim **2**, wherein the controller is configured to open the valves for which the fluid levels are below the fluid level thresholds.

4. The distribution station as recited in claim **2**, further comprising a plurality of sensor communication lines, each said sensor communication line being connected or connectable with a respective different one of the fluid level sensors, and each said sensor communication line being routed with a respective different one of the hoses.

5. The distribution station as recited in claim **4**, wherein each of the hoses includes a tube and a sleeve that circumscribes the tube, and each said sensor communication line is routed in the respective different one of the hoses between the tube and the sleeve.

6. The distribution station as recited in claim **5**, wherein each said sensor communication line is routed through a respective different one of the reels.

7. The distribution station as recited in claim **6**, further comprising a plurality of connectors, each of the connectors being mounted on a respective different one of the reels and each of the connectors receiving a respective different one of the sensor communication lines.

8. The distribution station as recited in claim **7**, wherein each of the reels includes a respective spindle, and each of the sensor communication lines is routed through a respective different one of the spindles.

9. The distribution station as recited in claim **8**, wherein controller is operable to open and close the plurality of valves responsive to a fuel level threshold.

10. A distribution station comprising:

a mobile trailer;

a pump on the mobile trailer;

a manifold on the mobile trailer and connected with the pump;

a plurality of reels on the mobile trailer;

a plurality of hoses, each said hose being connected with the manifold and each said hose including a tube and a sleeve that circumscribes the tube;

a plurality of valves on the mobile trailer, each said valve situated between the manifold and a respective different one of the hoses and being operable to control fluid flow from the manifold to the respective different one of the hoses;

a plurality of fluid level sensors, each said fluid level sensor being connected or connectable with a respective different one of the hoses; and

a controller configured to operate the valves responsive to fluid level thresholds to control fluid flow to the hoses.

11. The distribution station as recited in claim **10**, wherein the sleeve is a fabric sleeve.

12. The distribution station as recited in claim **10**, further comprising bands around the hoses, the bands securing the sleeve on the tube.

13. The distribution station as recited in claim **12**, wherein the bands are steel.

14. The distribution station as recited in claim **10**, further comprising a communication line between the sleeve and the tube.

15. A distribution station comprising:

a mobile trailer including a pump, a manifold connected with the pump, reels, flow passages connected to the manifold and running through the reels, hoses connected with the flow passages via the reels and each of the hoses including a tube and a sleeve that circumscribes the tube, valves situated between the manifold and the reels and operable to control fluid flow through the flow passages, fluid level sensors connected or connectable with the hoses, and a controller configured to operate the valves responsive fluid level thresholds to control fluid flow to the hoses.

16. The distribution station as recited in claim **15**, wherein the controller is configured to determine fluid levels based on signals from the fluid level sensors, determine whether one or more of the fluid levels are below one or more of the fluid level thresholds, and open the valves for which the fluid levels are below the fluid level thresholds.

17. The distribution station as recited in claim **16**, further comprising a plurality of sensor communication lines, each said sensor communication line being connected or connectable with a respective different one of the fluid level sensors.

18. The distribution station as recited in claim **17**, wherein each said sensor communication line is routed in the respective different one of the hoses between the tube and the sleeve.

* * * * *

EXHIBIT 3

US010494251B2

(12) **United States Patent**
Shock

(10) **Patent No.: US 10,494,251 B2**
(45) **Date of Patent: *Dec. 3, 2019**

(54) **MOBILE DISTRIBUTION STATION WITH AISLE WALKWAY**

(71) Applicant: **Fuel Automation Station, LLC**, Birmingham, MI (US)

(72) Inventor: **Ricky Dean Shock**, Victoria, TX (US)

(73) Assignee: **FUEL AUTOMATION STATION, LLC**, Birmingham, MI (US)

(*) Notice: Subject to any disclaimer, the term of this patent is extended or adjusted under 35 U.S.C. 154(b) by 0 days.

This patent is subject to a terminal disclaimer.

(21) Appl. No.: **15/890,584**

(22) Filed: **Feb. 7, 2018**

(65) **Prior Publication Data**

US 2018/0229998 A1 Aug. 16, 2018

Related U.S. Application Data

(63) Continuation of application No. 15/416,198, filed on Jan. 26, 2017, now Pat. No. 9,932,220, which is a (Continued)

(51) **Int. Cl.**
B67D 7/84 (2010.01)
B67D 7/40 (2010.01)
(Continued)

(52) **U.S. Cl.**
CPC ***B67D 7/845*** (2013.01); ***B60P 3/035*** (2013.01); ***B62D 63/08*** (2013.01); ***B67D 7/04*** (2013.01);
(Continued)

(58) **Field of Classification Search**
CPC . B67D 7/38; B67D 7/84; B67D 7/845; B67D 7/3218; B67D 7/36; B60P 3/065
See application file for complete search history.

(56) **References Cited**

U.S. PATENT DOCUMENTS

2,340,070 A 1/1944 McCauley et al.
2,516,150 A 7/1950 Samiran
(Continued)

FOREIGN PATENT DOCUMENTS

DE 1147397 4/1963
DE 20106400 10/2001
(Continued)

OTHER PUBLICATIONS

Oilfield Business: Technologies. Frac Shack Inc. introduces world's first Bi-Fuel Distribution Unit for hydraulic fracturing industry. Texas Oil & Gas: The National Magazine for Oil & Gas in Texas. vol. 4, Issue 2. 2015. p. 27.
(Continued)

Primary Examiner — Nicolas A Arnett
(74) *Attorney, Agent, or Firm* — Carlson, Gaskey & Olds, P.C.

(57) **ABSTRACT**

A distribution station includes a mobile trailer, a pump, first and second manifolds fluidly connected with the pump, reels, hoses, valves, fluid level sensors, and a controller. Each hose is connected with a different one of the reels. A portion of the reels are connected to be fed from the first manifold and another portion of the reels are connected to be fed from the second manifold. Each valve is situated between one of the first or second manifolds and a respective different one of the reels. Each fluid level sensor is associated with a different one of the hoses. The controller is configured to individually open and close the valves responsive to the fluid level sensors.

20 Claims, 19 Drawing Sheets

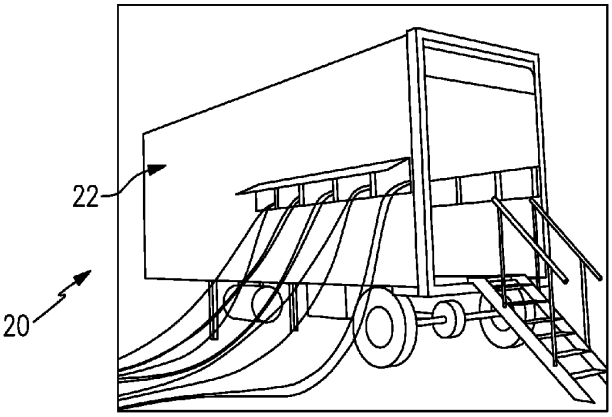

Related U.S. Application Data

continuation of application No. 15/290,371, filed on Oct. 11, 2016, now Pat. No. 9,586,805.

(51) **Int. Cl.**

B60P 3/035	(2006.01)
B67D 7/62	(2010.01)
B67D 7/78	(2010.01)
B62D 63/08	(2006.01)
B67D 7/04	(2010.01)
E21B 43/26	(2006.01)
B67D 7/14	(2010.01)
B67D 7/34	(2010.01)

(52) **U.S. Cl.**

CPC ***B67D 7/40*** (2013.01); ***B67D 7/62*** (2013.01); ***B67D 7/78*** (2013.01); *B67D 7/145* (2013.01); *B67D 7/348* (2013.01); *E21B 43/26* (2013.01)

(56) **References Cited**

U.S. PATENT DOCUMENTS

2,769,572	A	11/1956	Harman et al.
2,777,461	A	1/1957	Wildhaber
2,966,921	A	1/1961	Whiteman
3,028,010	A	4/1962	Headrick
3,136,295	A	6/1964	Gramo
3,547,141	A	12/1970	Alexander
3,605,798	A	9/1971	Green et al.
3,618,643	A	11/1971	Thomson
3,625,399	A	12/1971	Heisler
3,677,284	A	7/1972	Mendez
3,881,509	A	5/1975	Newton
4,139,019	A	2/1979	Bresie et al.
4,284,210	A	8/1981	Horak
4,511,311	A	4/1985	Olson
4,591,115	A	5/1986	DeCarlo
4,651,788	A	3/1987	Grosskreuz et al.
4,728,005	A	3/1988	Jacobs et al.
4,930,665	A	6/1990	Devine
5,406,988	A	4/1995	Hopkins
5,454,408	A	10/1995	DiBella et al.
5,465,766	A	11/1995	Siegele et al.
5,503,199	A	4/1996	Whitley, II et al.
5,538,051	A	7/1996	Brown et al.
5,551,309	A	9/1996	Goossens et al.
5,651,400	A	7/1997	Corts et al.
5,660,358	A	8/1997	Grafwallner et al.
5,708,424	A	1/1998	Orlando et al.
5,749,339	A	5/1998	Graham et al.
5,927,603	A	7/1999	McNabb
5,884,675	A	12/1999	Krasnov
6,098,646	A	8/2000	Hennemann et al.
6,206,056	B1	3/2001	Lagache
6,564,615	B1	5/2003	Carter
6,601,000	B1	7/2003	Barlian et al.
6,651,706	B2	11/2003	Litt
6,697,705	B2	2/2004	Johnson et al.
6,755,225	B1	6/2004	Niedwiecki et al.
6,761,194	B1	7/2004	Blong
6,779,569	B1	8/2004	Teer, Jr. et al.
6,786,245	B1	9/2004	Eichelberger et al.
7,063,276	B2	6/2006	Newton
7,106,026	B2	9/2006	Moore
7,353,808	B2	4/2008	Kakoo
7,415,995	B2	8/2008	Plummer et al.
7,458,543	B2	12/2008	Cutler et al.
7,568,507	B2	8/2009	Farese et al.
7,602,143	B2	12/2009	Capizzo
7,628,182	B2	12/2009	Poulter
7,937,215	B2	5/2011	Humphrey
7,938,151	B2	5/2011	Hockner
8,448,750	B2	5/2013	Gaugush et al.
9,346,662	B2	5/2016	Van Vliet et al.
9,371,830	B2	6/2016	Moffitt, Jr.
9,371,831	B2	6/2016	Moffitt, Jr.
9,586,805	B1 *	3/2017	Shock B67D 7/40
2001/0017815	A1	8/2001	Ackermann et al.
2005/0109561	A1	5/2005	Chopra
2007/0079891	A1	4/2007	Farese et al.
2007/0164031	A1	7/2007	Holz
2007/0181212	A1	8/2007	Fell
2016/0076533	A1	3/2016	Moffitt, Jr.

FOREIGN PATENT DOCUMENTS

DE	10309307	9/2004
DE	102006025025	12/2006
DE	102006038652	2/2008
EP	0161042	11/1985
EP	0433041	6/2001
GB	2485832	5/2012
RU	28347	3/2003
RU	91135	1/2010
RU	2452668	1/2012
SU	949644	8/1982
WO	0177006	10/2001
WO	03029721	4/2003
WO	03093118	11/2003
WO	2006005686	1/2006
WO	2006116572	11/2006
WO	2007087849	8/2007
WO	2008083830	7/2008
WO	2009026607	3/2009
WO	20090608065	6/2009

OTHER PUBLICATIONS

Frac Shack International. Publications & Endorsements. Retrieved Aug. 23, 2016 from: http://www.fracshack.com.

Frac Shack International. Technology. Retrieved Aug. 23, 2016 from: http://www.fracshack.com.

Frac Shack International. Design Benefits. Retrieved Aug. 23, 2016 from: http://www.fracshack.com.

Frac Shack International. Service. Retrieved Aug. 23, 2016 from: http://www.fracshack.com.

Frac Shack International. Frac Shack Series—Series A. Retrieved Aug. 23, 2016 from: http://www.fracshack.com.

Frac Shack International. Frac Shack Series—Series B. Retrieved Aug. 23, 2016 from: http://www.fracshack.com.

Frac Shack International. Frac Shack Series—Series C. Retrieved Aug. 23, 2016 from: http://www.fracshack.com.

Frac Shack International. Frac Shack Series—Series D. Retrieved Aug. 23, 2016 from: http://www.fracshack.com.

Frac Shack International. Frac Shack Series—Series E. Retrieved Aug. 23, 2016 from: http://www.fracshack.com.

Frac Shack International. Frac Shack Series—Series EG. Retrieved Aug. 23, 2016 from: http://www.fracshack.com.

Mann Tek. Dry Disconnect Couplings. Retrieved Jul. 22, 2016 from: http://www.manntek.com/products/drydisconnectcouplings p. 1-4.

Mann Tek. Dry Aviation Couplings. Retrieved Jul. 22, 2016 from: http://www.manntek.com/products/dryaviationcouplings p. 1-4.

Water, J. (2013). Better Safe than Sorry: Frac Shack a welcome addition to the oil patch. Jan. 2, 2013. Retrieved Aug. 23, 2016 from: http://www.pipelinenewsnorth.ca/better-safe-than-sorry-1.1123066.

Shimazaki, H. (1986). Development of centralized fueling and management system of kerosene heating machine. Nisseki Technical Review, vol. 28(4). Jul. 1986. pp. 184-188.

Technical Document. Surface vehicle standard. SAE International. Sep. 2014. pp. 1-5.

* cited by examiner

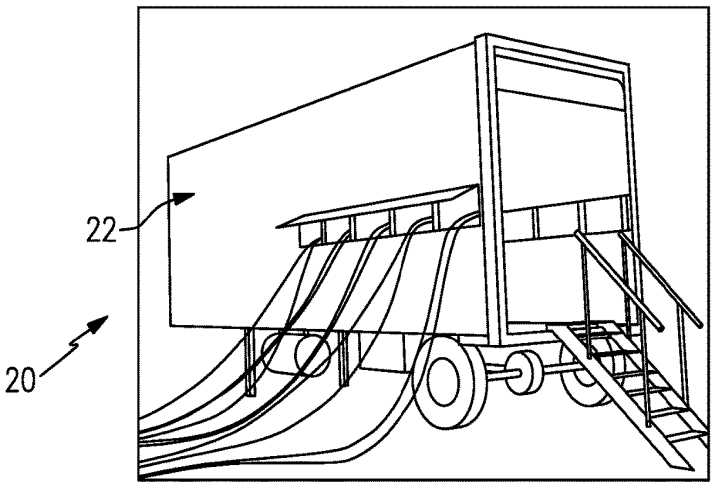
22
20

FIG.1

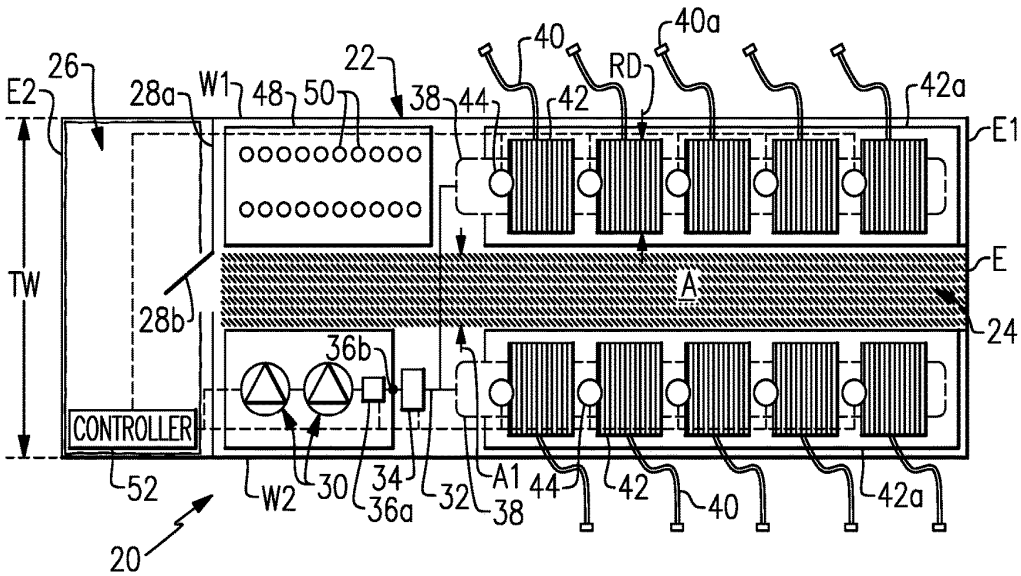
26
E2
28a
W1
48
50
22
38
44
40
42
RD
40a
42a
E1
TW
28b
A
E
24
36b
CONTROLLER
52
W2
30
34
36a
32
A1
38
44
42
40
42a
20

FIG.2

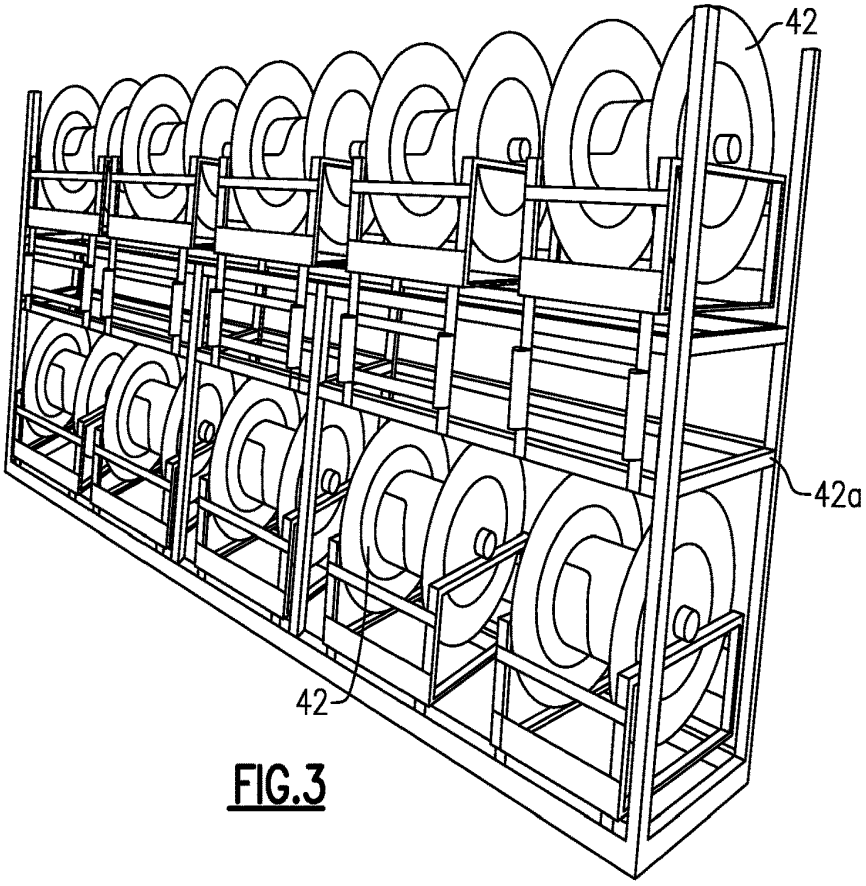

FIG.3

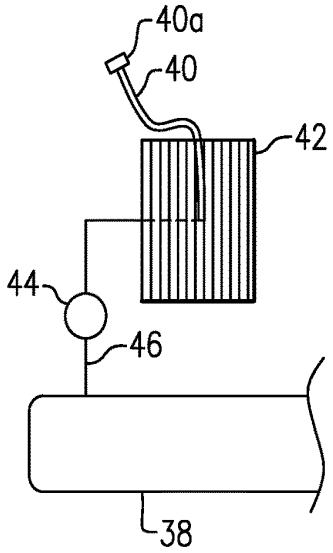

FIG.4

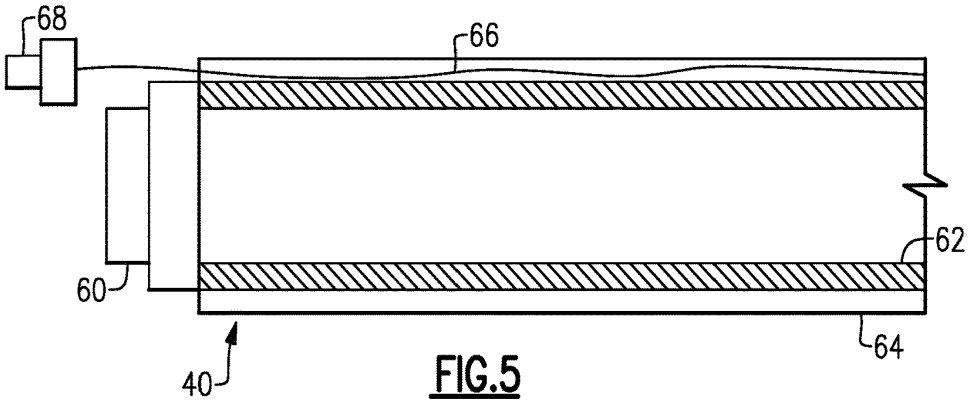

FIG.5

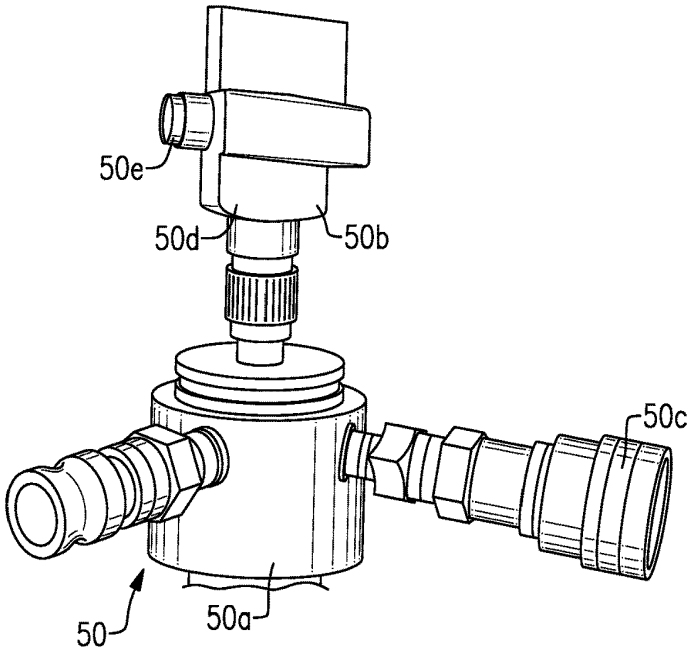

FIG.6

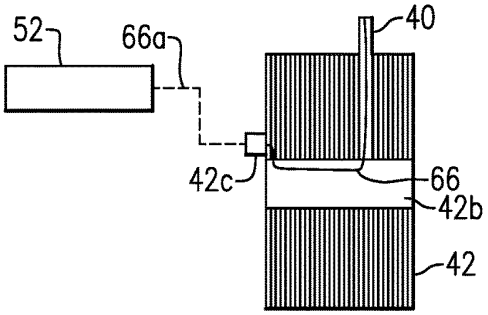

FIG.7

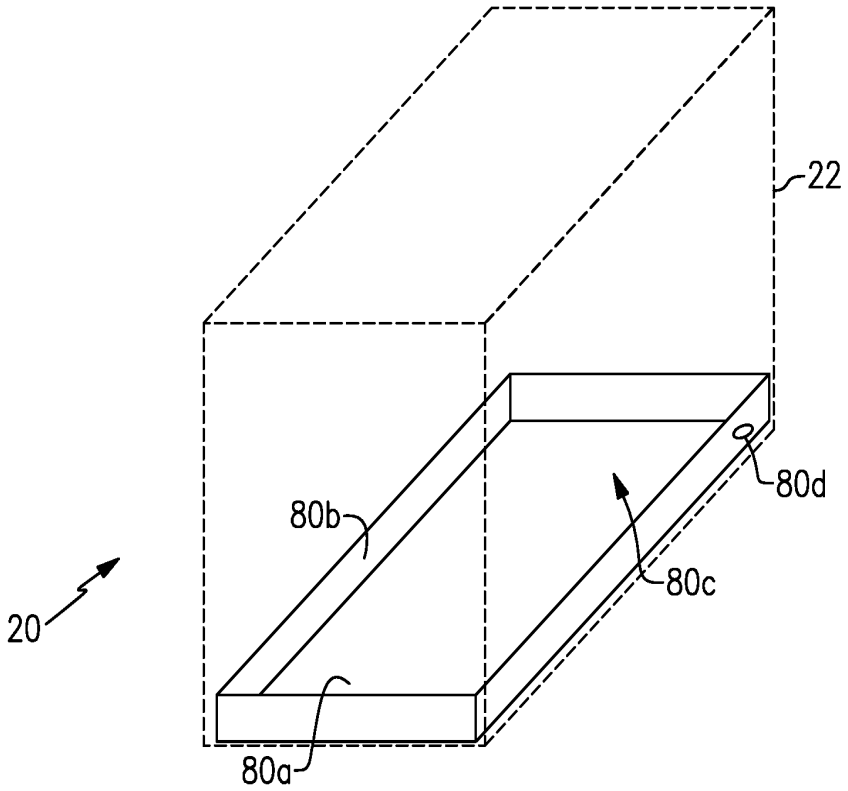

FIG.8

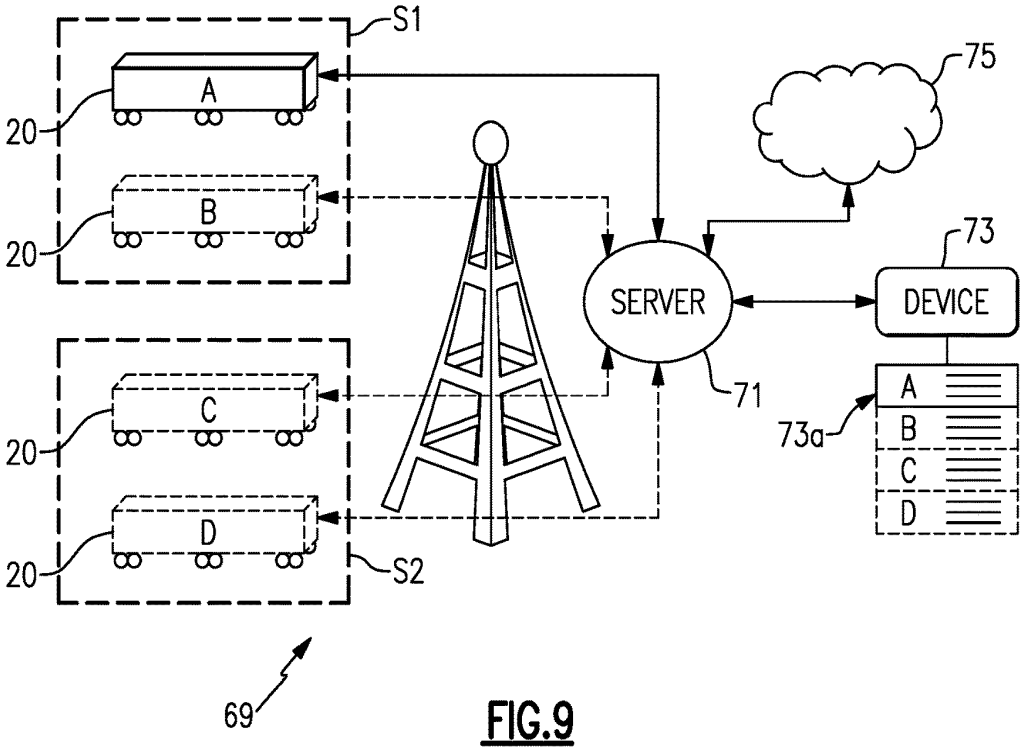

FIG.9

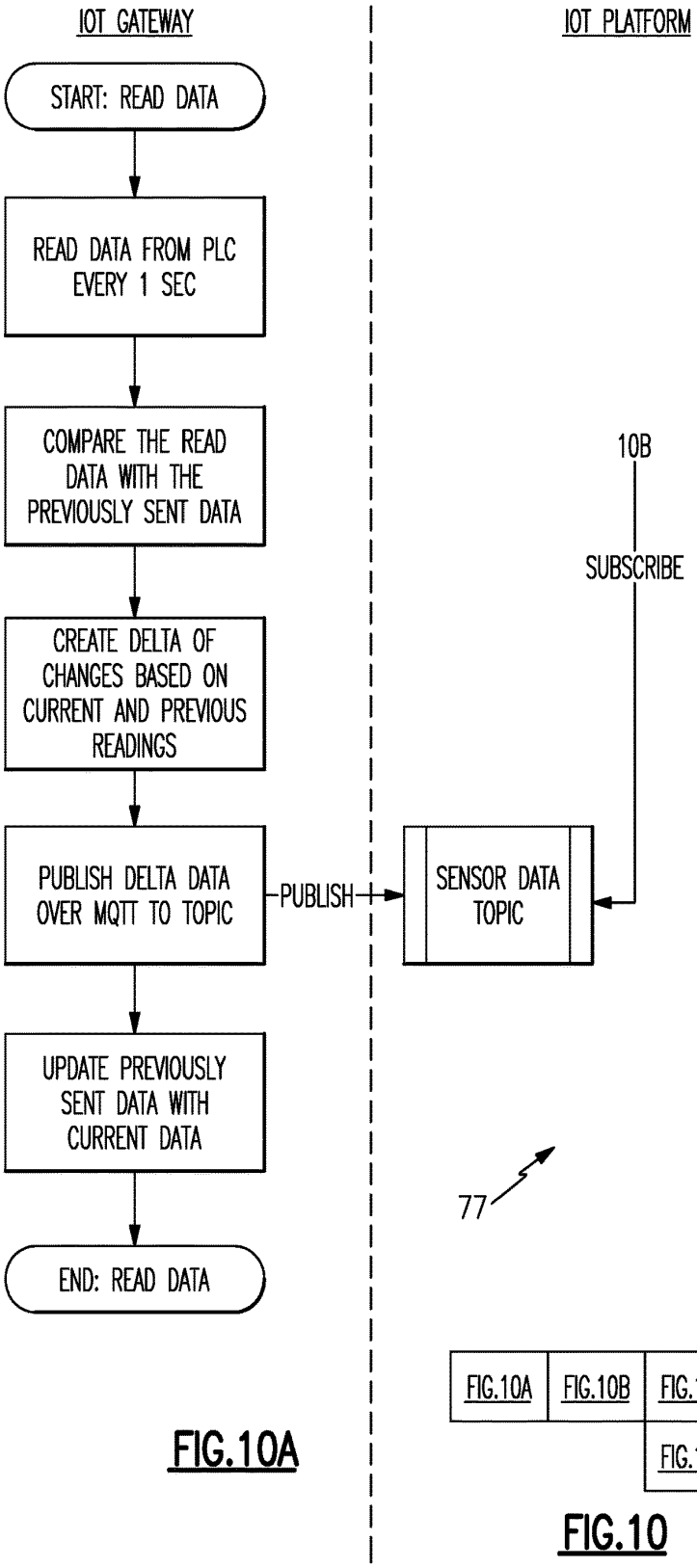

FIG.10A

FIG.10A	FIG.10B	FIG.10C	FIG.10D
		FIG.10E	FIG.10F

FIG.10

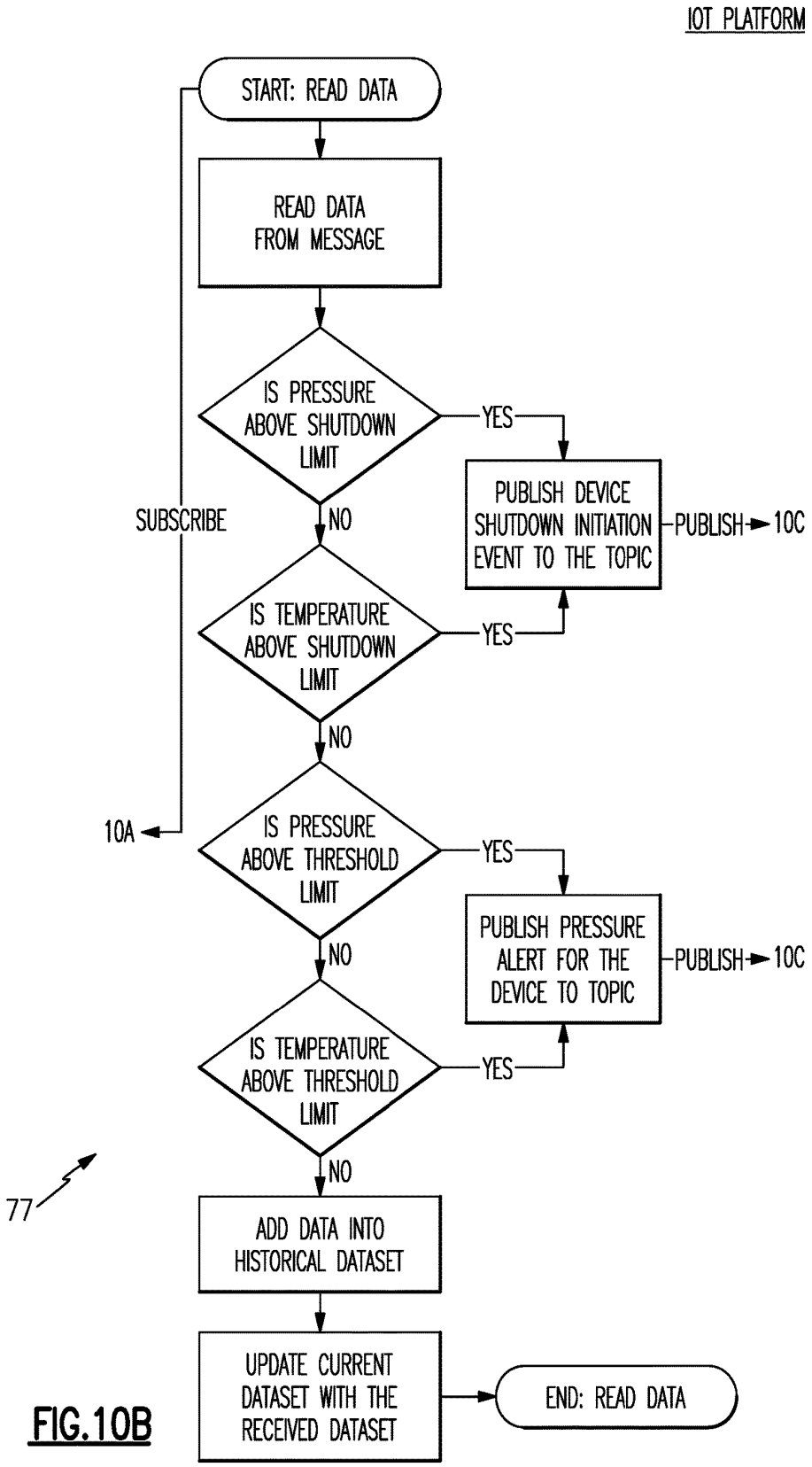
IOT PLATFORM
START: READ DATA
READ DATA FROM MESSAGE
IS PRESSURE ABOVE SHUTDOWN LIMIT
YES
PUBLISH DEVICE SHUTDOWN INITIATION EVENT TO THE TOPIC
PUBLISH
10C
SUBSCRIBE
NO
IS TEMPERATURE ABOVE SHUTDOWN LIMIT
YES
NO
10A
IS PRESSURE ABOVE THRESHOLD LIMIT
YES
PUBLISH PRESSURE ALERT FOR THE DEVICE TO TOPIC
PUBLISH
10C
NO
IS TEMPERATURE ABOVE THRESHOLD LIMIT
YES
NO
77
ADD DATA INTO HISTORICAL DATASET
UPDATE CURRENT DATASET WITH THE RECEIVED DATASET
END: READ DATA

FIG.10B

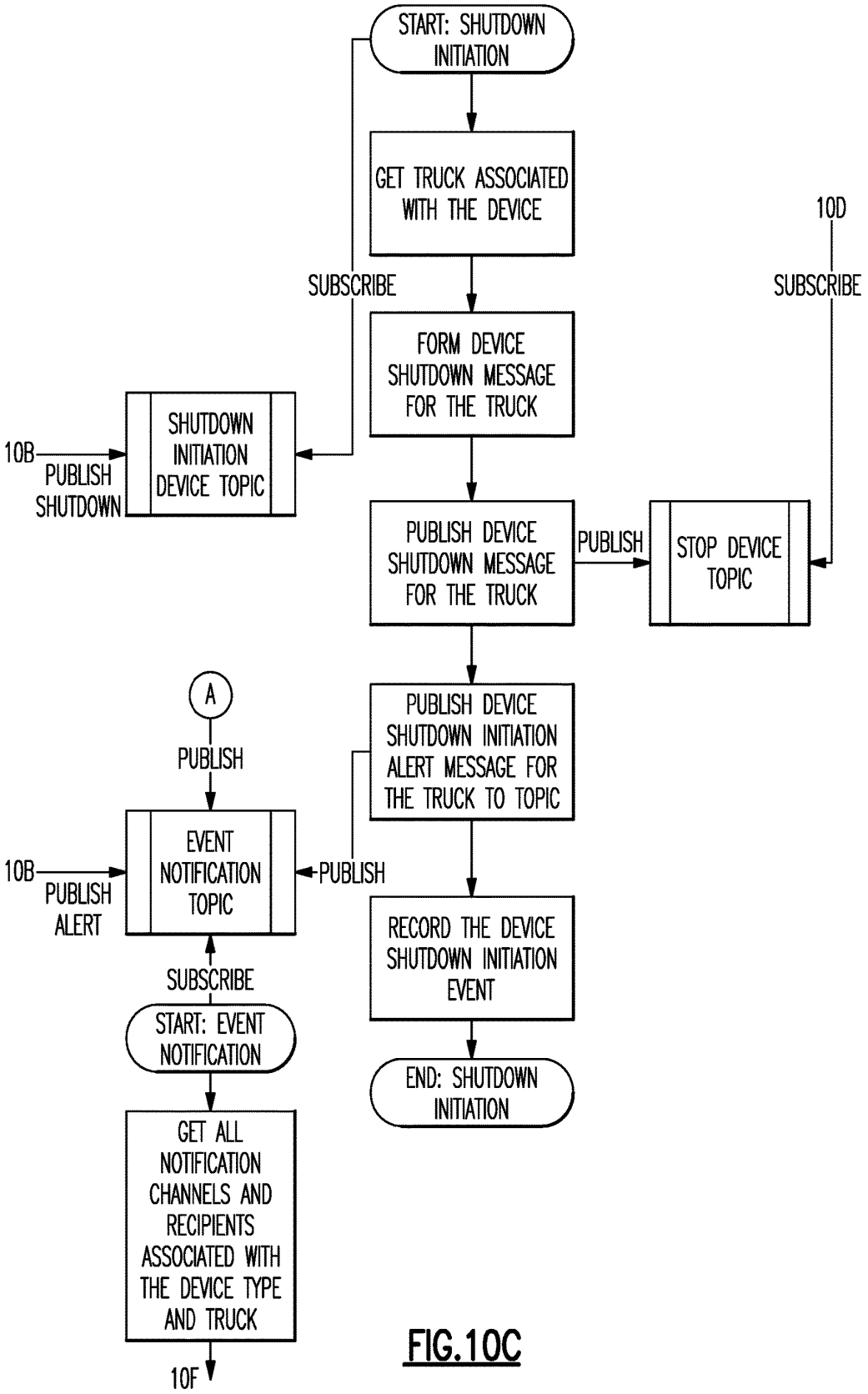
START: SHUTDOWN INITIATION
GET TRUCK ASSOCIATED WITH THE DEVICE
10D
SUBSCRIBE
SUBSCRIBE
FORM DEVICE SHUTDOWN MESSAGE FOR THE TRUCK
10B
PUBLISH SHUTDOWN
SHUTDOWN INITIATION DEVICE TOPIC
PUBLISH DEVICE SHUTDOWN MESSAGE FOR THE TRUCK
PUBLISH
STOP DEVICE TOPIC
A
PUBLISH
PUBLISH DEVICE SHUTDOWN INITIATION ALERT MESSAGE FOR THE TRUCK TO TOPIC
10B
PUBLISH ALERT
EVENT NOTIFICATION TOPIC
PUBLISH
RECORD THE DEVICE SHUTDOWN INITIATION EVENT
SUBSCRIBE
START: EVENT NOTIFICATION
END: SHUTDOWN INITIATION
GET ALL NOTIFICATION CHANNELS AND RECIPIENTS ASSOCIATED WITH THE DEVICE TYPE AND TRUCK
10F

FIG.10C

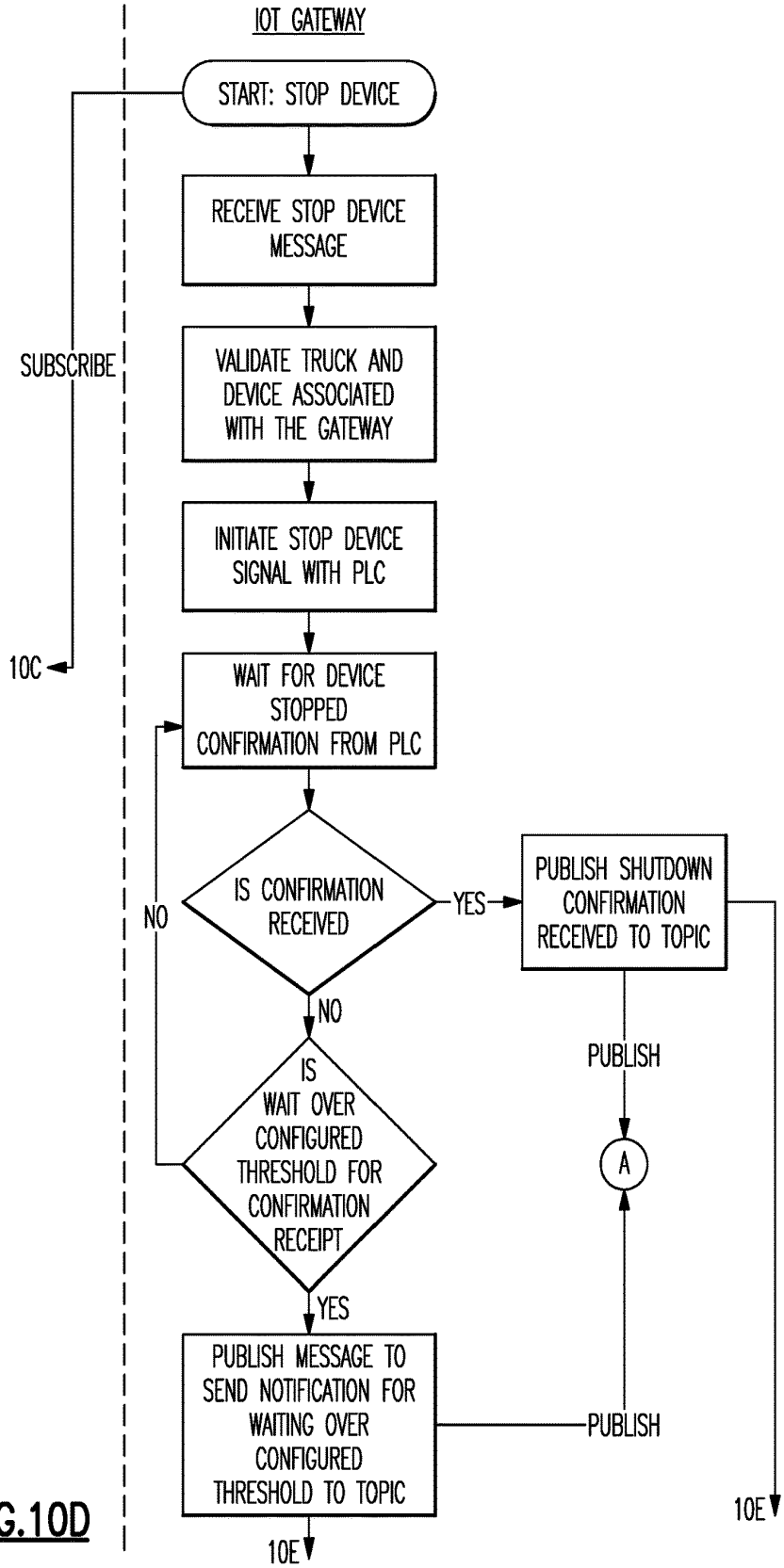
IOT GATEWAY
START: STOP DEVICE
RECEIVE STOP DEVICE MESSAGE
VALIDATE TRUCK AND DEVICE ASSOCIATED WITH THE GATEWAY
INITIATE STOP DEVICE SIGNAL WITH PLC
WAIT FOR DEVICE STOPPED CONFIRMATION FROM PLC
IS CONFIRMATION RECEIVED
YES
NO
PUBLISH SHUTDOWN CONFIRMATION RECEIVED TO TOPIC
PUBLISH
A
IS WAIT OVER CONFIGURED THRESHOLD FOR CONFIRMATION RECEIPT
NO
YES
PUBLISH MESSAGE TO SEND NOTIFICATION FOR WAITING OVER CONFIGURED THRESHOLD TO TOPIC
PUBLISH
SUBSCRIBE
10C
10E
10E

FIG.10D

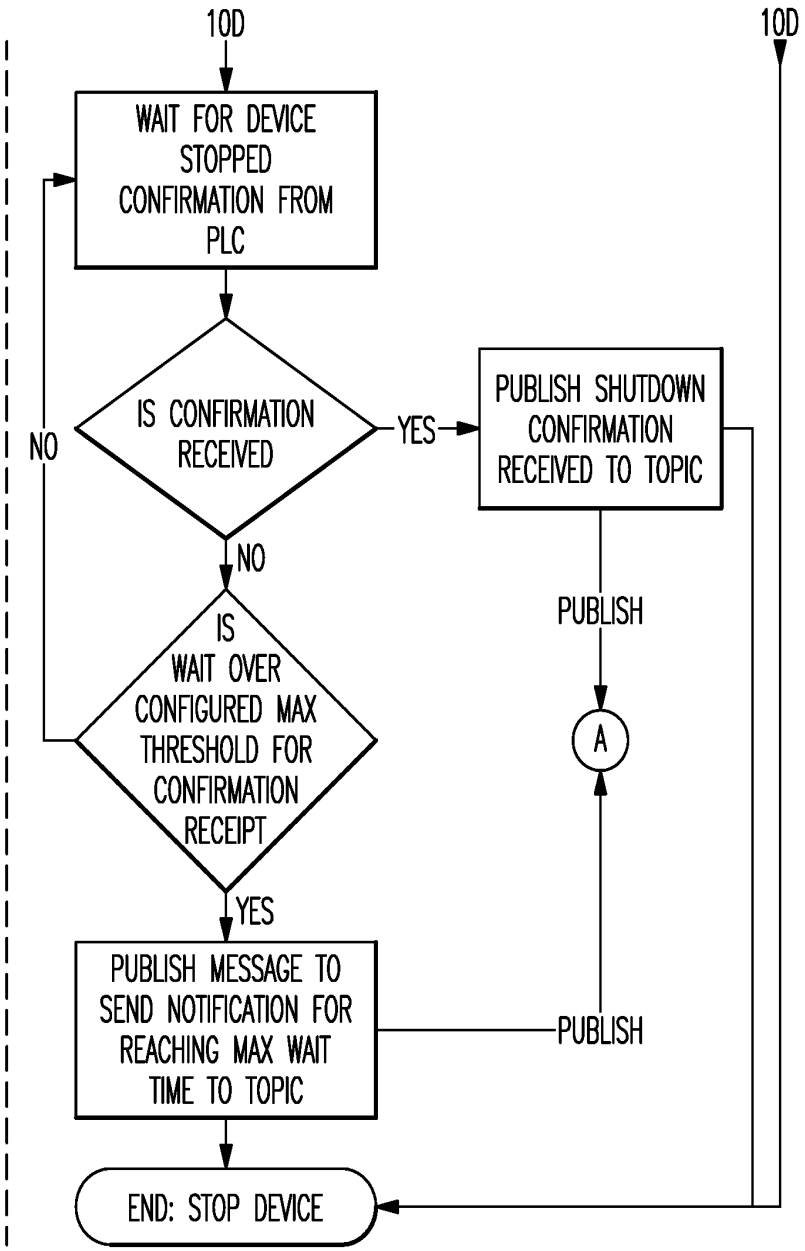
10D
10D
WAIT FOR DEVICE STOPPED CONFIRMATION FROM PLC
IS CONFIRMATION RECEIVED
YES
NO
PUBLISH SHUTDOWN CONFIRMATION RECEIVED TO TOPIC
NO
IS WAIT OVER CONFIGURED MAX THRESHOLD FOR CONFIRMATION RECEIPT
PUBLISH
A
YES
PUBLISH MESSAGE TO SEND NOTIFICATION FOR REACHING MAX WAIT TIME TO TOPIC
PUBLISH
END: STOP DEVICE

FIG.10E

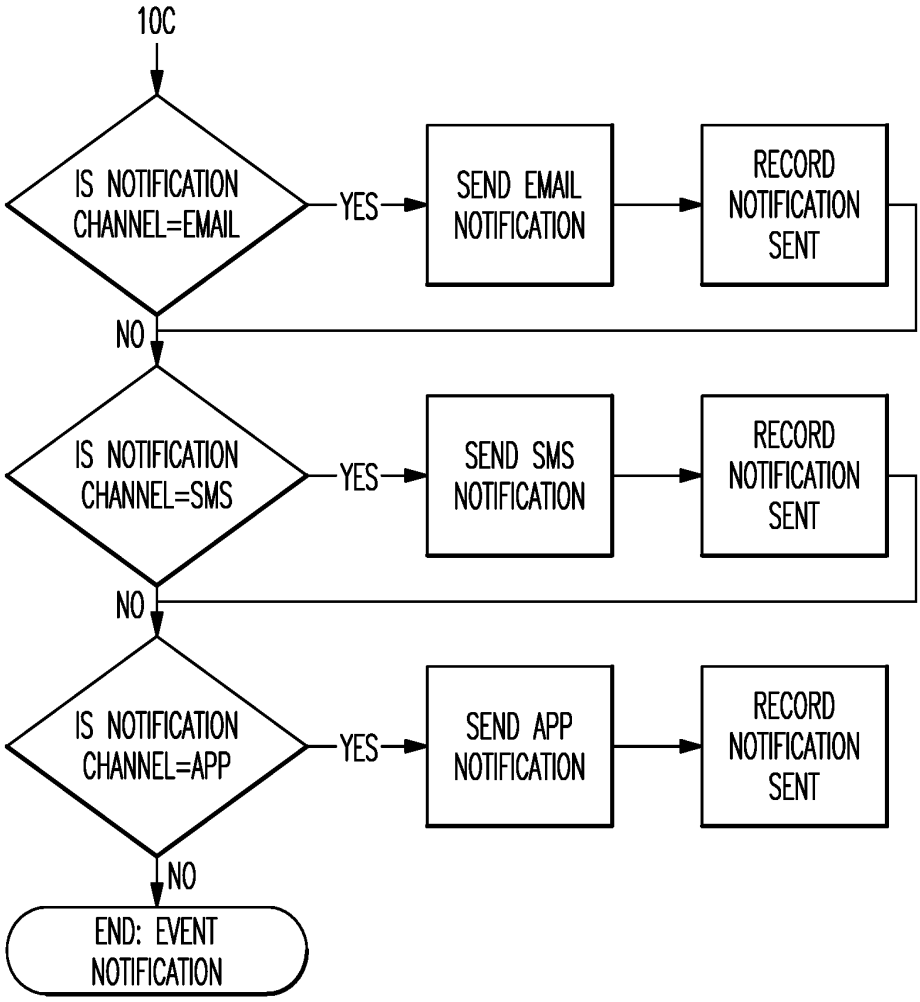
10C
IS NOTIFICATION CHANNEL=EMAIL
YES
SEND EMAIL NOTIFICATION
RECORD NOTIFICATION SENT
NO
IS NOTIFICATION CHANNEL=SMS
YES
SEND SMS NOTIFICATION
RECORD NOTIFICATION SENT
NO
IS NOTIFICATION CHANNEL=APP
YES
SEND APP NOTIFICATION
RECORD NOTIFICATION SENT
NO
END: EVENT NOTIFICATION

FIG.10F

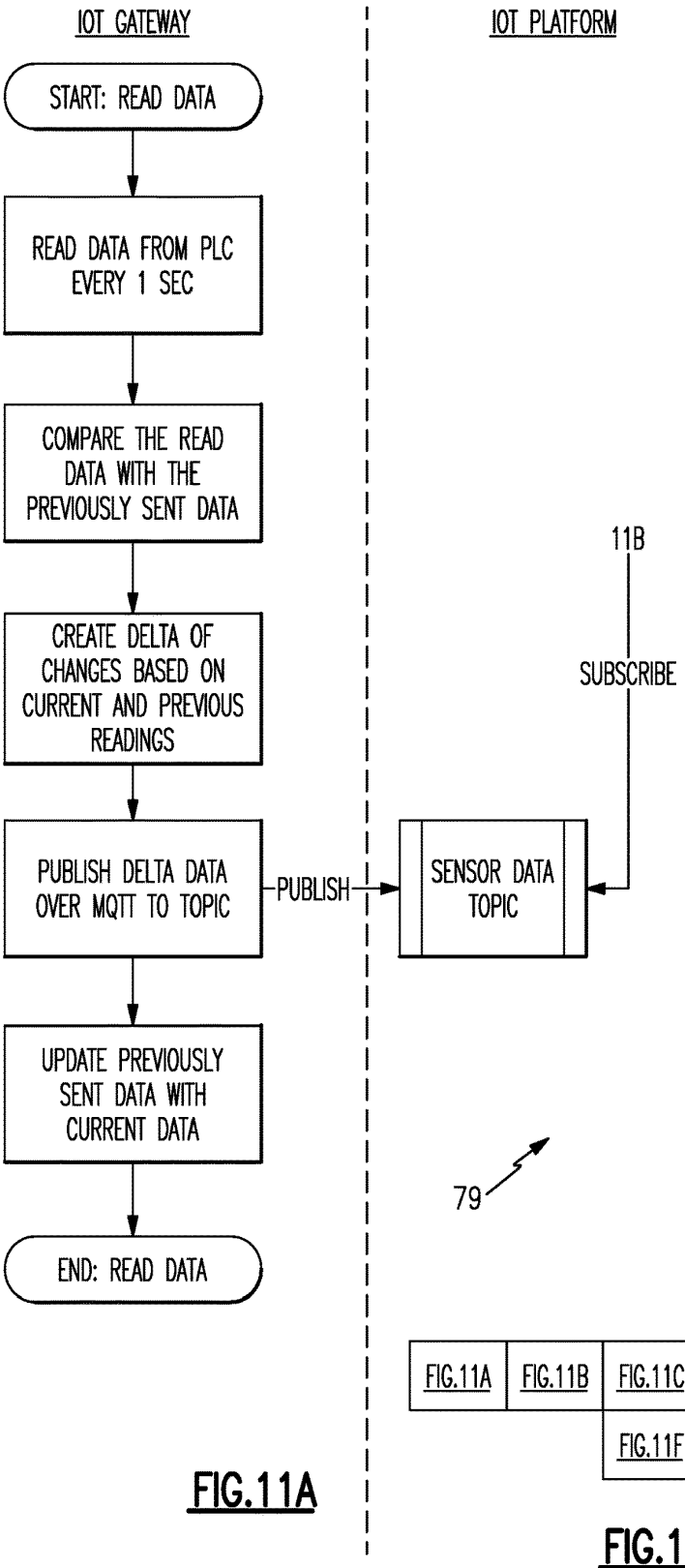

FIG.11A

FIG.11A	FIG.11B	FIG.11C	FIG.11D	FIG.11E
		FIG.11F	FIG.11G	FIG.11H

FIG.11

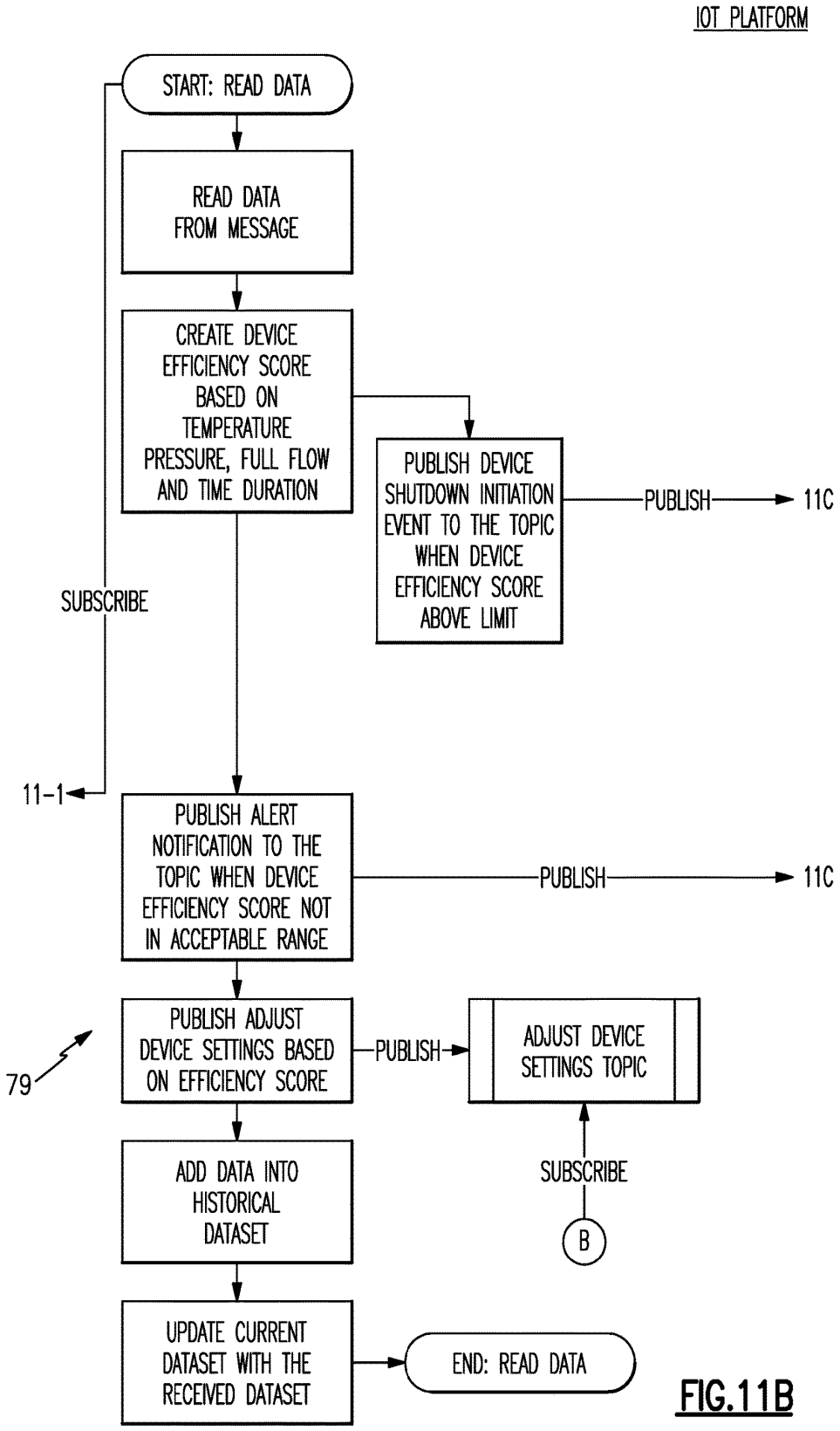
IOT PLATFORM
START: READ DATA
READ DATA FROM MESSAGE
CREATE DEVICE EFFICIENCY SCORE BASED ON TEMPERATURE PRESSURE, FULL FLOW AND TIME DURATION
PUBLISH DEVICE SHUTDOWN INITIATION EVENT TO THE TOPIC WHEN DEVICE EFFICIENCY SCORE ABOVE LIMIT
PUBLISH
11C
SUBSCRIBE
11-1
PUBLISH ALERT NOTIFICATION TO THE TOPIC WHEN DEVICE EFFICIENCY SCORE NOT IN ACCEPTABLE RANGE
PUBLISH
11C
79
PUBLISH ADJUST DEVICE SETTINGS BASED ON EFFICIENCY SCORE
PUBLISH
ADJUST DEVICE SETTINGS TOPIC
SUBSCRIBE
B
ADD DATA INTO HISTORICAL DATASET
UPDATE CURRENT DATASET WITH THE RECEIVED DATASET
END: READ DATA

FIG.11B

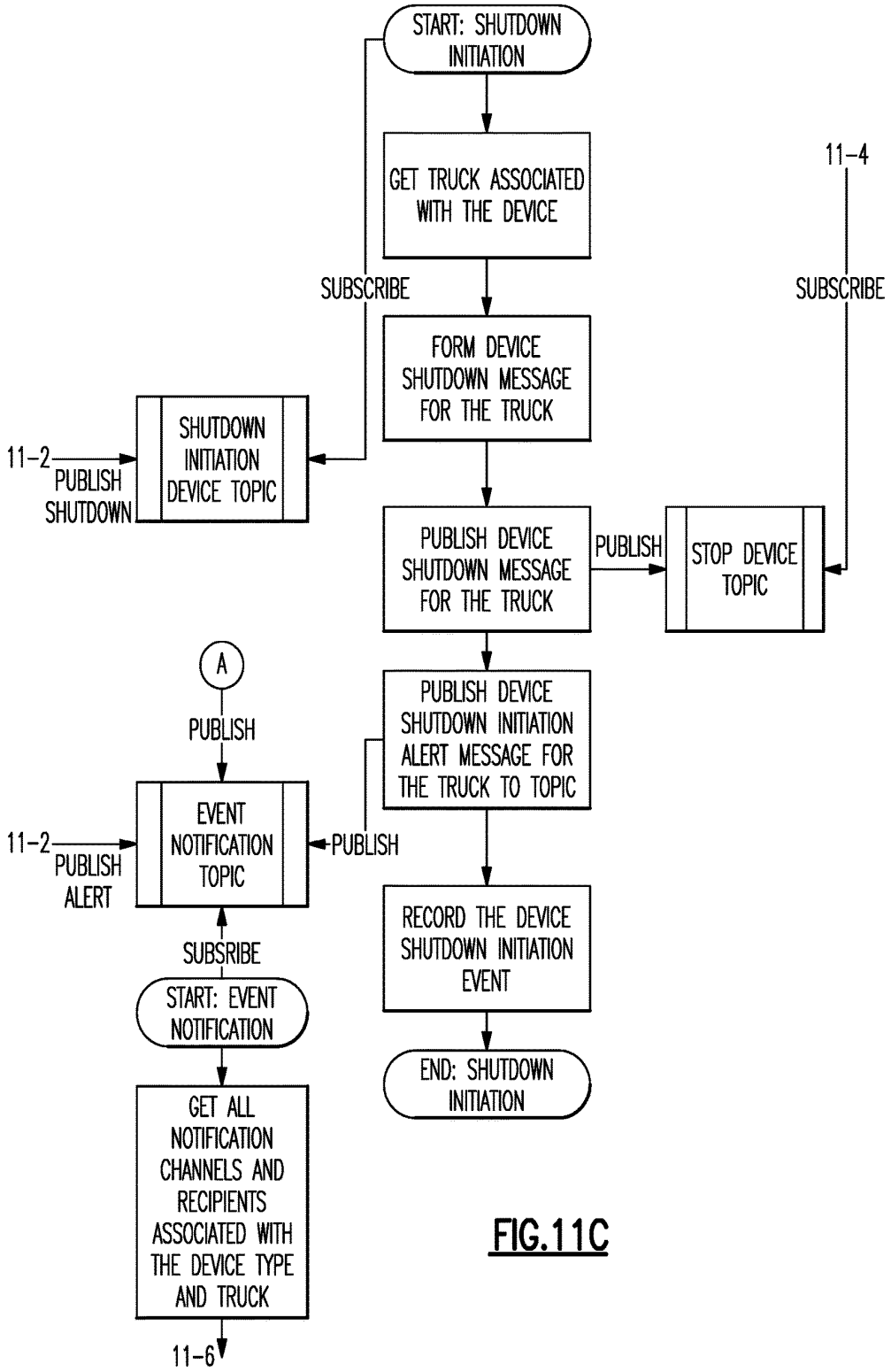
START: SHUTDOWN INITIATION
GET TRUCK ASSOCIATED WITH THE DEVICE
SUBSCRIBE
FORM DEVICE SHUTDOWN MESSAGE FOR THE TRUCK
11-2
PUBLISH SHUTDOWN
SHUTDOWN INITIATION DEVICE TOPIC
11-4
SUBSCRIBE
PUBLISH DEVICE SHUTDOWN MESSAGE FOR THE TRUCK
PUBLISH
STOP DEVICE TOPIC
A
PUBLISH
PUBLISH DEVICE SHUTDOWN INITIATION ALERT MESSAGE FOR THE TRUCK TO TOPIC
11-2
PUBLISH ALERT
EVENT NOTIFICATION TOPIC
PUBLISH
SUBSRIBE
START: EVENT NOTIFICATION
RECORD THE DEVICE SHUTDOWN INITIATION EVENT
END: SHUTDOWN INITIATION
GET ALL NOTIFICATION CHANNELS AND RECIPIENTS ASSOCIATED WITH THE DEVICE TYPE AND TRUCK
11-6

FIG.11C

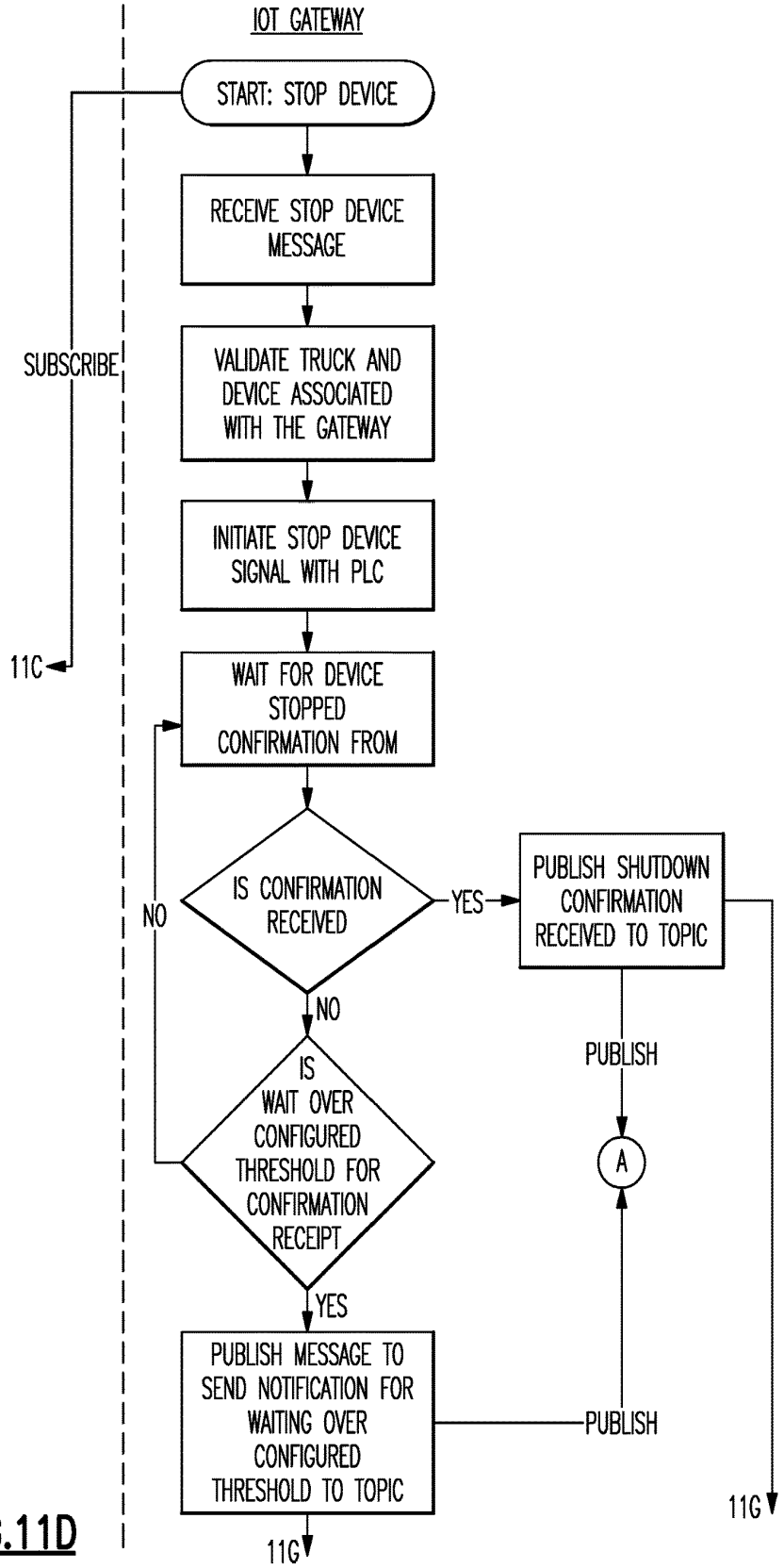
IOT GATEWAY
START: STOP DEVICE
RECEIVE STOP DEVICE MESSAGE
VALIDATE TRUCK AND DEVICE ASSOCIATED WITH THE GATEWAY
INITIATE STOP DEVICE SIGNAL WITH PLC
WAIT FOR DEVICE STOPPED CONFIRMATION FROM
IS CONFIRMATION RECEIVED
YES
PUBLISH SHUTDOWN CONFIRMATION RECEIVED TO TOPIC
NO
IS WAIT OVER CONFIGURED THRESHOLD FOR CONFIRMATION RECEIPT
NO
YES
PUBLISH MESSAGE TO SEND NOTIFICATION FOR WAITING OVER CONFIGURED THRESHOLD TO TOPIC
PUBLISH
PUBLISH
A
SUBSCRIBE
11C
11G
11G

FIG.11D

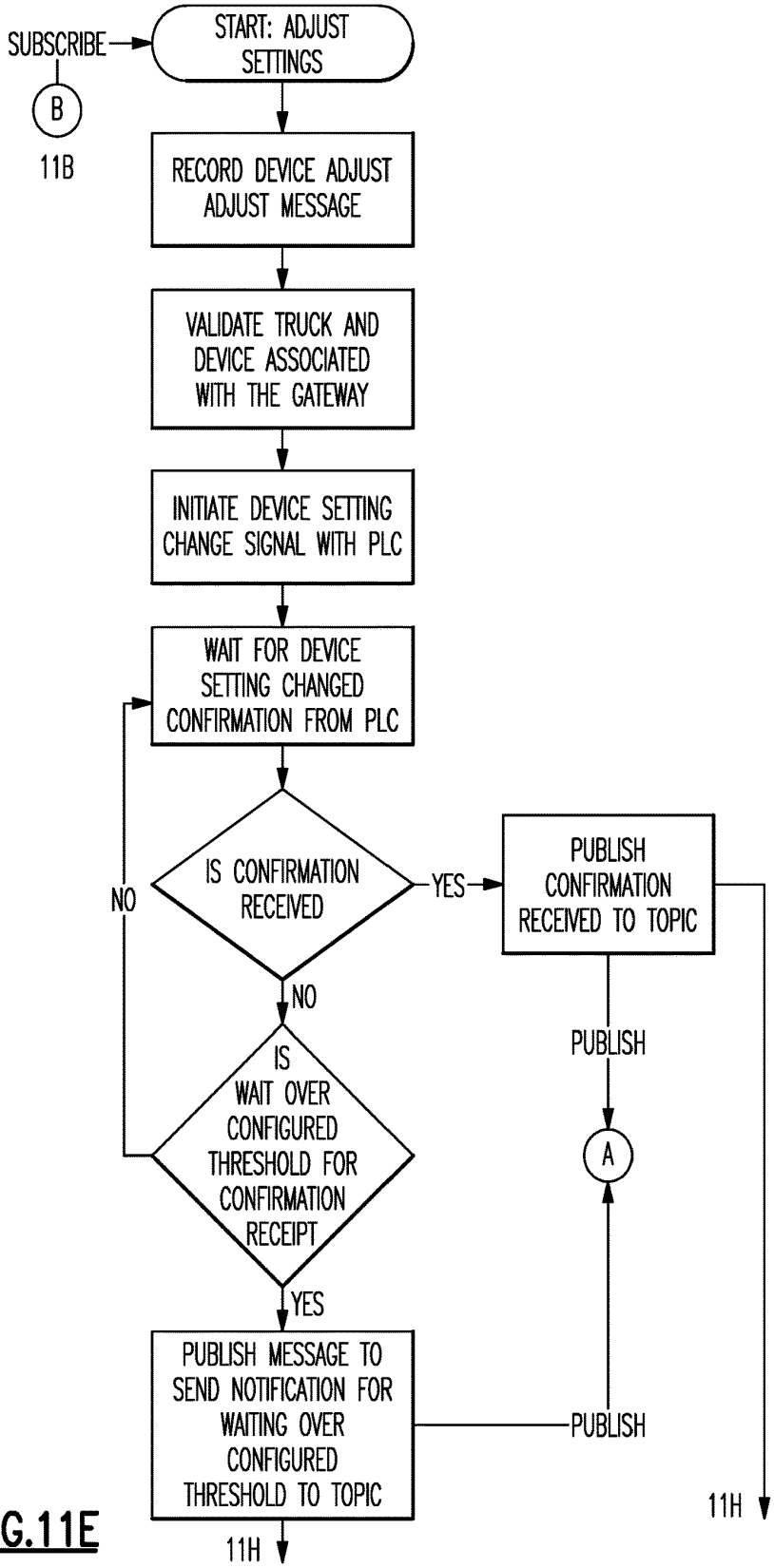
SUBSCRIBE
B
11B
START: ADJUST SETTINGS
RECORD DEVICE ADJUST ADJUST MESSAGE
VALIDATE TRUCK AND DEVICE ASSOCIATED WITH THE GATEWAY
INITIATE DEVICE SETTING CHANGE SIGNAL WITH PLC
WAIT FOR DEVICE SETTING CHANGED CONFIRMATION FROM PLC
IS CONFIRMATION RECEIVED
YES
NO
PUBLISH CONFIRMATION RECEIVED TO TOPIC
PUBLISH
A
NO
IS WAIT OVER CONFIGURED THRESHOLD FOR CONFIRMATION RECEIPT
YES
PUBLISH MESSAGE TO SEND NOTIFICATION FOR WAITING OVER CONFIGURED THRESHOLD TO TOPIC
PUBLISH
11H
11H

FIG.11E

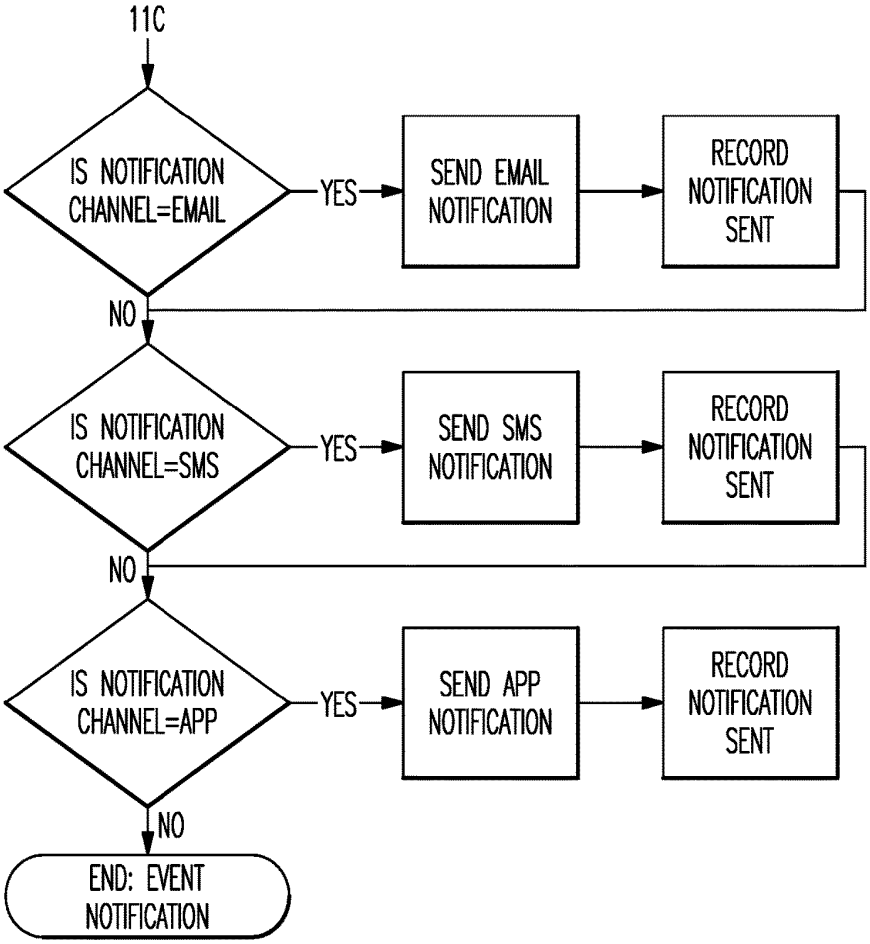
11C
IS NOTIFICATION CHANNEL=EMAIL
YES
SEND EMAIL NOTIFICATION
RECORD NOTIFICATION SENT
NO
IS NOTIFICATION CHANNEL=SMS
YES
SEND SMS NOTIFICATION
RECORD NOTIFICATION SENT
NO
IS NOTIFICATION CHANNEL=APP
YES
SEND APP NOTIFICATION
RECORD NOTIFICATION SENT
NO
END: EVENT NOTIFICATION

FIG.11F

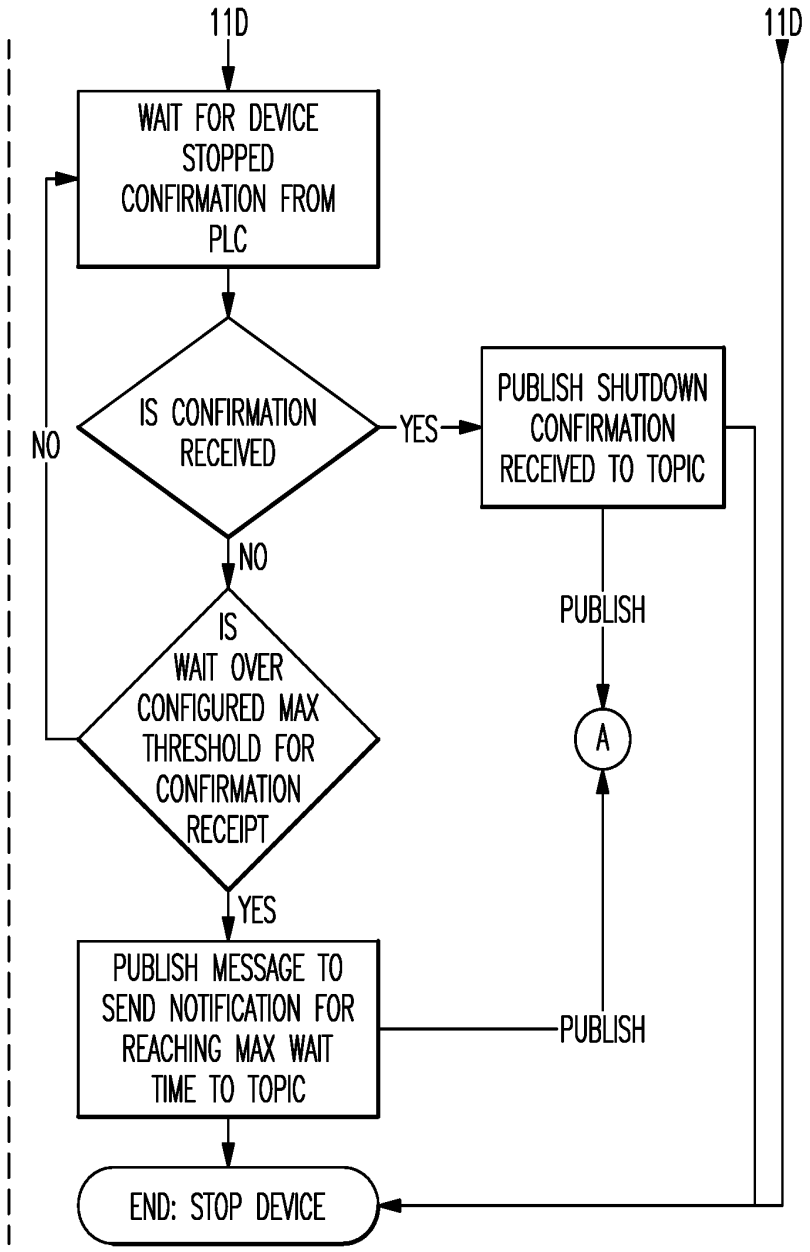
11D
11D
WAIT FOR DEVICE STOPPED CONFIRMATION FROM PLC
IS CONFIRMATION RECEIVED
YES
NO
PUBLISH SHUTDOWN CONFIRMATION RECEIVED TO TOPIC
NO
IS WAIT OVER CONFIGURED MAX THRESHOLD FOR CONFIRMATION RECEIPT
PUBLISH
A
YES
PUBLISH MESSAGE TO SEND NOTIFICATION FOR REACHING MAX WAIT TIME TO TOPIC
PUBLISH
END: STOP DEVICE

FIG.11G

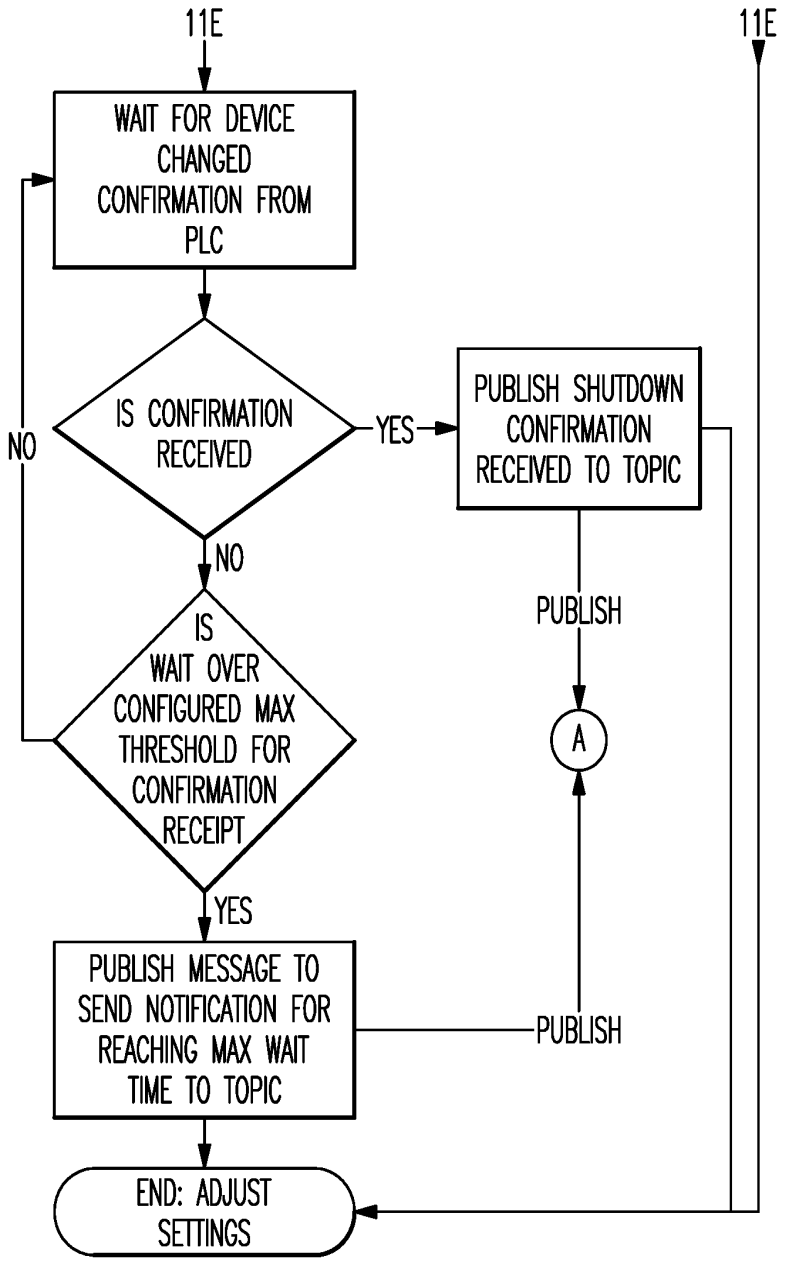
11E
11E
WAIT FOR DEVICE CHANGED CONFIRMATION FROM PLC
IS CONFIRMATION RECEIVED
YES
NO
PUBLISH SHUTDOWN CONFIRMATION RECEIVED TO TOPIC
NO
PUBLISH
IS WAIT OVER CONFIGURED MAX THRESHOLD FOR CONFIRMATION RECEIPT
A
YES
PUBLISH MESSAGE TO SEND NOTIFICATION FOR REACHING MAX WAIT TIME TO TOPIC
PUBLISH
END: ADJUST SETTINGS

FIG.11H

MOBILE DISTRIBUTION STATION WITH AISLE WALKWAY

CROSS-REFERENCE TO RELATED APPLICATION

The present disclosure is a continuation of U.S. patent application Ser. No. 15/416,198, filed Jan. 26, 2017, which is a continuation of U.S. patent application Ser. No. 15/290,371, filed Oct. 11, 2016, which is now issued as U.S. Pat. No. 9,586,805.

BACKGROUND

Hydraulic fracturing (also known as fracking) is a well-stimulation process that utilizes pressurized liquids to fracture rock formations. Pumps and other equipment used for hydraulic fracturing typically operate at the surface of the well site. The equipment may operate semi-continuously, until refueling is needed, at which time the equipment may be shut-down for refueling. Shut-downs are costly and reduce efficiency. More preferably, to avoid shut-downs fuel is replenished in a hot-refueling operation while the equipment continues to run. This permits fracking operations to proceed fully continuously; however, hot-refueling can be difficult to reliably sustain for the duration of the fracking operation.

SUMMARY

A distribution station according to an example of the present disclosure includes a mobile trailer, a pump, first and second manifolds fluidly connected with the pump, reels, hoses, valves, fluid level sensors, and a controller. Each hose is connected with a different one of the reels. A portion of the reels are connected to be fed from the first manifold and another portion of the reels are connected to be fed from the second manifold. Each valve is situated between one of the first or second manifolds and a respective different one of the reels. Each fluid level sensor is associated with a different one of the hoses. The controller is configured to individually open and close the valves responsive to the fluid level sensors.

BRIEF DESCRIPTION OF THE DRAWINGS

The various features and advantages of the present disclosure will become apparent to those skilled in the art from the following detailed description. The drawings that accompany the detailed description can be briefly described as follows.

FIG. **1** illustrates an example mobile distribution station.

FIG. **2** illustrates an internal layout of a mobile distribution station.

FIG. **3** illustrates an isolated view of hose reels on a support rack used in a mobile distribution station.

FIG. **4** illustrates an example of a connection between a manifold, a control valve, and a reel.

FIG. **5** illustrates a sectioned view of an example hose for a mobile distribution station.

FIG. **6** illustrates an example of an integrated fuel cap sensor for a mobile distribution station.

FIG. **7** illustrates an example of the routing of a sensor communication line through a reel in a mobile distribution station.

FIG. **8** illustrates an example of a mobile distribution station with an integrated floor pan.

FIG. **9** illustrates a system that can be used to remotely monitor and manage one or more mobile distribution stations.

FIG. **10** is a workflow logic diagram that represents an example of a method for managing one or more mobile distribution stations. The size of the diagram exceeds what can be shown on a page. Therefore, FIG. **10** is divided into sub-sections, indicated as FIG. **10**A, FIG. **10**B, FIG. **10**C, FIG. **10**D, FIG. **10**E, and FIG. **10**F. The sub-sections show the details of the workflow logic diagram and, where appropriate, linking arrows to adjacent sub-sections. The relative location of the sub-sections to each other is also shown.

FIG. **11** is another workflow logic diagram that represents an example of a method for managing one or more mobile distribution stations. The size of the diagram exceeds what can be shown on a page. Therefore, FIG. **11** is divided into sub-sections, indicated as FIG. **11**A, FIG. **11**B, FIG. **11**C, FIG. **11**D, FIG. **11**E, FIG. **11**F, FIG. **11**G, and FIG. **11**H. The sub-sections show the details of the workflow logic diagram and, where appropriate, linking arrows to adjacent sub-sections. The relative location of the sub-sections to each other is also shown.

DETAILED DESCRIPTION

FIG. **1** illustrates a mobile distribution station **20** and FIG. **2** illustrates an internal layout of the station **20**. As will be described, the station **20** may serve in a "hot-refueling" capacity to distribute fuel to multiple pieces of equipment while the equipment is running, such as fracking equipment at a well site. As will be appreciated, the station **20** is not limited to applications for fracking or for delivering fuel. The examples herein may be presented with respect to fuel delivery, but the station **20** may be used in mobile delivery of other fluids, in other gas/petroleum recovery operations, or in other operations where mobile refueling or fluid delivery will be of benefit.

In this example, the station **20** includes a mobile trailer **22**. Generally, the mobile trailer **22** is elongated and has first and second opposed trailer side walls W**1** and W**2** that join first and second opposed trailer end walls E**1** and E**2**. Most typically, the trailer **22** will also have a closed top (not shown). The trailer side walls W**1**/W**2** define a trailer width, TW. The mobile trailer **22** may have wheels that permit the mobile trailer **22** to be moved by a vehicle from site to site to service different hot-refueling operations.

In this example, the mobile trailer **22** has two compartments. A first compartment **24** includes the physical components for distributing fuel, such as diesel fuel, and a second compartment **26** serves as an isolated control room for managing and monitoring fuel distribution. The compartments **24**/**26** are separated by an inside wall **28***a* that has an inside door **28***b*. The second compartment **26** may be insulated with a fire resistant or retardant material **26***a*. In the event of a fire threat, a worker may take cover in the second compartment **26**. The fire resistant or retardant material **26***a* may shield the second compartment and thus temporarily protect the worker under such circumstances. The second compartment **26** may include an auxiliary escape door to provide external egress from the trailer **22**. Thus, if needed, a worker may exit the trailer **22** other than by the first compartment **24**.

The first compartment **24** includes one or more pumps **30**. Fuel may be provided to the one or more pumps **30** from an external fuel source, such as a tanker truck on the site. On the trailer **22**, the one or more pumps **30** are fluidly connected via a fuel line **32** with a high precision register **34** for

metering fuel. The fuel line **32** may include, but is not limited to, hard piping. In this example, the fuel line **32** includes a filtration and air eliminator system **36***a* and one or more sensors **36***b*. Although optional, the system **36***a* is beneficial in many implementations, to remove foreign particles and air from the fuel prior to delivery to the equipment. The one or more sensors **36***b* may include a temperature sensor, a pressure sensor, or a combination thereof, which assist in fuel distribution management.

The fuel line **32** is connected with one or more manifolds **38**. In the illustrated example, the station **20** includes two manifolds **38** that arranged on opposed sides of the compartment **24**. As an example, the manifolds **38** are elongated tubes that are generally larger in diameter than the fuel line **32** and that have at least one inlet and multiple outlets. Each hose **40** is wound, at least initially, on a reel **42** that is rotatable to extend or retract the hose **40** externally through one or more windows of the trailer **22**. Each reel **42** has a reel diameter RD, which is the outside diameter or dimension of the reel **42**. Most typically, all or substantially all of the reels **42** will be the same size and thus have a common reel diameter RD. Each reel **42** may have an associated motor to mechanically extend and retract the hose **40**.

As shown in an isolated view in FIG. **3**, the reels **42** are mounted on a support rack **42***a*. In this example, the support rack **42***a* is configured with upper and lower rows of reels **42**. For instance, a ratio of the number of reels **42** in the upper row to a number of reels in the lower row on the support rack **42***a* is 1:1. As an example, each row has five reels **42** such that each support rack **42***a* provides ten reels **42** and thus ten hoses **40**. There are two support racks **42***a* (FIG. **2**) arranged on opposed sides of the first compartment **24**. The reels **42** are thus likewise arranged on opposed sides of the first compartment **24** in the trailer **22**. The station **20** therefore can provide twenty hoses **40** in the illustrated arrangement, with ten hoses **40** deployable on each side of the station **20**. For instance, the first group of ten hoses **40** on one side of the compartment **24** are deployable from the first trailer side wall W**1** and the second group of ten hoses **40** are deployable from the second trailer side wall W**2**. As will be appreciated, fewer or additional reels and hoses may be used in alternative examples.

An aisle walkway (A) runs down the middle of the trailer **22**. In this example, the aisle walkway A runs between the support racks **42***a* from an outside door E to the inside door **28***b*. Most typically, the aisle walkway A will include the space or volume through which workers walk to operate the station **20**. The aisle walkway A has an aisle width A**1**. As an example, the aisle width A**1** is the largest constant width walkway down the trailer **22** adjacent at least the reels **42** that is not intruded upon by affixed equipment in the trailer **22**, such as the reels **42**, support racks **42***a*, other support structures, etc.

The size of the aisle width A can contribute to reducing the potential for undesired incidents. For instance, there may be two or three or more workers that walk up and down the aisle walkway A in connection with their job duties. The workers need space to potentially pass by each other in the aisle walkway A and carry equipment through the aisle walkway A without bumping into each other or into equipment affixed in the trailer **22**.

The aisle width A**1**, however, is not unlimited and is subject to space availability and other factors relating to the performance of the station **20**. For instance, the reel diameter RD relates to the lengths of hoses that can be stored on the reels **42**. A relatively large reel diameter RD can accommodate a long hose winding, while a relatively smaller reel diameter RD would only accommodate a shorter hose winding. Longer hoses potentially provide greater access to equipment on a site that is located farther from the station, but longer hoses require more space in a station than shorter hoses due to the size of the reel needed to wind the longer hose. There is thus a multi-faceted interplay between the size and number of reels, arrangement of reels, and size/location of an aisle.

In a middle aisle arrangement as with the aisle walkway A, the aisle width A**1** is greater than the reel diameter RD by a factor of at least 1.3. In a further example, the aisle width A**1** is greater than the reel diameter RD by a factor of at least 1.5, and the trailer width TW is no greater than about 96 inches.

Additionally or alternatively, in a further example, a ratio of the trailer width TW to the aisle width A**1** is no greater than 5. In a further example, the ratio of the trailer width TW to the aisle width A**1** is also greater than 2. In a further example, the ratio of the trailer width TW to the aisle width A**1** is also equal to or less than 4. In a further example, the trailer width TW is no greater than about 96 inches and the ratio of the trailer width TW to the aisle width A**1** is greater than 2 and no greater than 5. In a further example of any of the examples herein, the aisle width A**1** is between about 30 inches and about 38 inches. The parameters above provide good station performance in combination with good packaging in the trailer **22** and good aisle size for worker movement.

As shown in a representative example in FIG. **4**, each hose **40** is connected to a respective one of the reels **42** and a respective one of a plurality of control valves **44**. For example, a secondary fuel line **46** leads from the manifold **38** to the reel **42**. The control valve **44** is in the secondary fuel line **46**. The control valve **44** is moveable between open and closed positions to selectively permit fuel flow from the manifold **38** to the reel **42** and the hose **40**. For example, the control valve **44** is a powered valve, such as a solenoid valve.

In the illustrated example, the first compartment **24** also includes a sensor support rack **48**. The sensor support rack **48** holds integrated fuel cap sensors **50** (when not in use), or at least portions thereof. When in use, each integrated fuel cap sensor **50** is temporarily affixed to a piece of equipment (i.e., the fuel tank of the equipment) that is subject to the hot-refueling operation. Each hose **40** may include a connector end **40***a* and each integrated fuel cap sensor **50** may have a corresponding mating connector to facilitate rapid connection and disconnection of the hose **40** with the integrated fuel cap sensor **50**. For example, the connector end **40***a* and mating connector on the integrated fuel cap sensor **50** form a hydraulic quick-connect.

At least the control valves **44**, pump or pumps **30**, sensor or sensors **36***b*, and register **34** are in communication with a controller **52** located in the second compartment **26**. As an example, the controller **52** includes software, hardware, or both that is configured to carry out any of the functions described herein. In one further example, the controller **52** includes a programmable logic controller with a touch-screen for user input and display of status data. For example, the screen may simultaneously show multiple fluid levels of the equipment that is being serviced.

When in operation, the integrated fuel cap sensors **50** are mounted on respective fuel tanks of the pieces of equipment that are subject to the hot-refueling operation. The hoses **40** are connected to the respective integrated fuel cap sensors **50**. Each integrated fuel cap sensor **50** generates signals that are indicative of the fuel level in the fuel tank of the piece

of equipment on which the integrated fuel cap sensor **50** is mounted. The signals are communicated to the controller **52**.

The controller **52** interprets the signals and determines the fuel level for each fuel tank of each piece of equipment. In response to a fuel level that falls below a lower threshold, the controller **52** opens the control valve **44** associated with the hose **40** to that fuel tank and activates the pump or pumps **30**. The pump or pumps **30** provide fuel flow into the manifolds **38** and through the open control valve **44** and reel **42** such that fuel is provided through the respective hose **40** and integrated fuel cap sensor **50** into the fuel tank. The lower threshold may correspond to an empty fuel level of the fuel tank, but more typically the lower threshold will be a level above the empty level to reduce the potential that the equipment completely runs out of fuel and shuts down. The controller **52** can also be programmed with a failsafe measure related to the operation of the fuel cap sensors **50**. As an example, once a control valve **44** is open, if the controller **52** does not detect a change in fuel level from the fuel cap sensor **50** associated with the control valve **44** within a preset time period, the controller **52** shuts the pump **30** off and closes the control valve **44**. Thus, if a hose **40** were to rupture, spillage of fuel is limited to the volume of fuel in the hose **40**. For instance, the preset time period may be three seconds, six seconds, ten seconds, or fifteen seconds, which may limit spillage to approximately fifteen gallons for a given size of hose.

The controller **52** also determines when the fuel level in the fuel tank reaches an upper threshold. The upper threshold may correspond to a full fuel level of the fuel tank, but more typically the upper threshold will be a level below the full level to reduce the potential for overflow. In response to reaching the upper threshold, the controller **52** closes the respective control valve **44** and ceases the pump or pumps **30**. If other control valves **44** are open or are to be opened, the pump or pumps **30** may remain on. The controller **52** can also be programmed with an electronic stop failsafe measure to prevent over-filling. As an example, once an upper threshold is reached on a first tank and the control valve **44** is closed, but the pump **30** is otherwise to remain on to fill other tanks, if the fuel level continues to rise in the first tank, the controller **52** shuts the pump **30** off.

Multiple control valves **44** may be open at one time, to provide fuel to multiple fuel tanks at one time. Alternatively, if there is demand for fuel from two or more fuel tanks, the controller **52** may sequentially open the control valves **44** such that the tanks are refueled sequentially. For instance, upon completion of refueling of one fuel tank, the controller **52** closes the control valve **44** of the hose **40** associated with that tank and then opens the next control valve **44** to begin refueling the next fuel tank. Sequential refueling may facilitate maintaining internal pressure in the manifold and fuel line **32** above a desired or preset pressure threshold to more rapidly deliver fuel. Similarly, the controller **52** may limit the number of control valves **44** that are open at any one instance in order to maintain the internal pressure in the manifold and fuel line **32** above a desired or preset threshold. The controller **52** may perform the functions above while in an automated operating mode. Additionally, the controller **52** may have a manual mode in which a user can control at least some functions through the PLC, such as starting and stopped the pump **30** and opening and closing control valves **44**. For example, manual mode may be used at the beginning of a job when initially filling tanks to levels at which the fuel cap sensors **50** can detect fuel and/or during a job if a fuel cap sensor **50** becomes inoperable. Of course, operating in manual mode may deactivate some automated functions, such as filling at the low threshold or stopping at the high threshold.

In addition to the use of the sensor signals to determine fuel level, or even as an alternative to use of the sensor signals, the refueling may be time-based. For instance, the fuel consumption of a given piece of equipment may be known such that the fuel tank reaches the lower threshold at known time intervals. The controller **52** is operable to refuel the fuel tank at the time intervals rather than on the basis of the sensor signals, although sensor signals may also be used to verify fuel level.

The controller **52** also tracks the amount of fuel provided to the fuel tanks. For instance, the register **34** precisely measures the amount of fuel provided from the pump or pumps **30**. As an example, the register **34** is an electronic register and has a resolution of about 0.1 gallons. The register **34** communicates measurement data to the controller **52**. The controller **52** can thus determine the total amount of fuel used to very precise levels. The controller **52** may also be configured to provide outputs of the total amount of fuel consumed. For instance, a user may program the controller **52** to provide outputs at desired intervals, such as by worker shifts or daily, weekly, or monthly periods. The outputs may also be used to generate invoices for the amount of fuel used. As an example, the controller **52** may provide a daily output of fuel use and trigger the generation of an invoice that corresponds to the daily fuel use, thereby enabling almost instantaneous invoicing.

In a further example, the integrated fuel cap sensors **50** are each hard-wired to the controller **52**. The term "hard-wired" or variations thereof refers to a wired connection between two components that serves for electronic communication there between, which here a sensor and a controller. The hard-wiring may facilitate providing more reliable signals from the integrated fuel cap sensors **50**. For instance, the many pieces of equipment, vehicles, workers, etc. at a site may communicate using wireless devices. The wireless signals may interfere with each other and, therefore, degrade communication reliability. Hard-wiring the integrated fuel cap sensors **50** to the controller **52** facilitates reduction in interference and thus enhances reliability.

In general, hard-wiring in a hot-refueling environment presents several challenges. For example, a site has many workers walking about and typically is located on rough terrain. Thus, as will be described below, each integrated fuel cap sensor **50** is hard-wired through the associated hose **40** to the controller **52**.

FIG. **5** illustrates a representative portion of one of the hoses **40** and, specifically, the end of the hose **40** that will be located at the fuel tank of the equipment being refueled. In this example, the hose **40** includes a connector **60** at the end for detachably connecting the hose **40** to the integrated fuel cap sensors **50**. The hose **40** is formed of a tube **62** and a sleeve **64** that circumscribes the tube **62**. As an example, the tube **62** may be a flexible elastomeric tube and the sleeve **64** may be a flexible fabric sleeve. The sleeve **64** is generally loosely arranged around the tube **62**, although the sleeve **64** may closely fit on the tube **62** to prevent substantial slipping of the sleeve **64** relative to the tube **62** during use and handling. Optionally, to further prevent slipping and/or to secure the sleeve **64**, bands may be tightened around the hose **40**. As an example, one or more steel or stainless steel bands can be provided at least near the ends of the hose **40**.

A plurality of sensor communication lines **66** (one shown) are routed with or in the respective hoses **40**. For instance, each line **66** may include a wire, a wire bundle, and/or

multiple wires or wire bundles. In one further example, the line **66** is a low milli-amp intrinsic safety wiring, which serves as a protection feature for reducing the concern for operating electrical equipment in the presence of fuel by limiting the amount of thermal and electrical energy available for ignition. In this example, the line **66** is routed through the hose **40** between (radially) the tube **62** and the sleeve **64**. The sleeve **64** thus serves to secure and protect the line **66**, and the sleeve **64** may limit spill and spewing if there is a hose **40** rupture. In particular, since the line **66** is secured in the hose **40**, the line **66** does not present a tripping concern for workers. Moreover, in rough terrain environments where there are stones, sand, and other objects that could damage the line **66** if it were free, the sleeve **64** shields the line **66** from direct contact with such objects. In further examples, the line **66** may be embedded or partially embedded in the tube **62** or the sleeve **64**.

In this example, the line **66** extends out from the end of the hose **40** and includes a connector **68** that is detachably connectable with a respective one of the integrated fuel cap sensors **50**. For example, FIG. **6** illustrates a representative example of one of the integrated fuel cap sensors **50**. The integrated fuel cap sensor **50** includes a cap portion **50***a* and a fluid level sensor portion **50***b*. The cap portion **50***a* is detachably connectable with a port of a fuel tank. The cap portion **50***a* includes a connector port **50***c*, which is detachably connectable with the connector **60** of the hose **40**. The sensor portion **50***b* includes a sensor **50***d* and a sensor port **50***e* that is detachably connectable with the connector **68** of the line **66**. The fuel cap sensor **50** may also include a vent port that attaches to a drain hose, to drain any overflow into a containment bucket and/or reduce air pressure build-up in a fuel tank. Thus, a user may first mount the cap portion **50***a* on the fuel tank of the equipment, followed by connecting the hose **40** to the port **50***c* and connecting the line **66** to the port **50***e*.

The sensor **50***d* may be any type of sensor that is capable of detecting fluid or fuel level in a tank. In one example, the sensor **50***d* is a guided wave radar sensor. A guided wave radar sensor may include a transmitter/sensor that emits radar waves, most typically radio frequency waves, down a probe. A sheath may be provided around the probe. For example, the sheath may be a metal alloy (e.g., stainless steel or aluminum) or polymer tube that surrounds the probe. One or more bushings may be provided between the probe and the sheath, to separate the probe from the sheath. The sheath shields the probe from contact by external objects, the walls of a fuel tank, or other components in a fuel tank, which might otherwise increase the potential for faulty sensor readings. The probe serves as a guide for the radar waves. The radar waves reflect off of the surface of the fuel and the reflected radar waves are received into the transmitter/sensor. A sensor controller determines the "time of flight" of the radar waves, i.e., how long it takes from emission of the radar waves for the radar waves to reflect back to the transmitter/sensor. Based on the time, the sensor controller, or the controller **52** if the sensor controller does not have the capability, determines the distance that the radar waves travel. A longer distance thus indicates a lower fuel level (farther away) and a shorter distance indicates a higher fuel level (closer).

The line **66** routes through the hose **40** and back to the reel **42** in the trailer **22**. For example, the line **66** is also routed or hard-wired through the reel **42** to the controller **52**. FIG. **7** illustrates a representative example of the routing in the reel **42**. In this example, the reel **42** includes a spindle **42***b* about which the reel is rotatable. The spindle **42***b* may be hollow, and the line **66** may be routed through the spindle **42***b*. The reel **42** may also include a connector **42***c* mounted thereon. The connector **42***c* receives the line **66** and serves as a port for connection with another line **66***a* to the controller **52**.

The lines **66***a* may converge to one or more communication junction blocks or "bricks" prior to the controller **52**. The communication junction blocks may serve to facilitate the relay of the signals back to the controller **52**. The communication junction blocks may alternatively or additionally serve to facilitate identification of the lines **66**, and thus the signals, with respect to which of the hoses a particular line **66** is associated with. For instance, a group of communication junction blocks may have unique identifiers and the lines **66** into a particular communication junction block may be associated with identifiers. A signal relayed into the controller **52** may thus be associated with the identifier of the communication junction blocks and a particular line **66** of that communication junction block in order to identify which hose the signal is to be associated with. The valves **44** may also communicate with the controller **52** in a similar manner through the communication junction blocks.

As illustrated in a further example in FIG. **8**, the station **20** may be further enhanced to reduce the potential for fluid or fuel escape. The trailer **22**, depicted here in phantom, includes a floor pan **80**. The floor pan **80** may be formed of metal, polymer, or combinations thereof and serves to reduce or prevent the escape of fluid or fuel from inside the trailer **22**. In comparison to a temporary, moveable catch basin, the floor pan **80** is a permanent fixture in the trailer **22**, and may be structurally affixed in the trailer **22** by fasteners, adhesive, or the like.

As an example, the floor pan **80** includes a bottom **80***a* that joins sides **80***b* to define a container cavity **80***c*. For instance, the floor pan **80** lines the bottom portion of the trailer **22**. The bottom **80***a* and sides **80***b* seal the container cavity **80***c* such that any fluid or fuel that leaks in the trailer **22** is caught and contained in the floor pan **80**, to reduce the potential of spilling or leaking out from the trailer **22**. The floor pan **80** may line only the first compartment **24** or may line both the first and second compartments **24**/**26**. In alternative examples, the floor pan **80** may line only a portion of the trailer **22** where there is potential for leak or spill. Most typically, the floor pan **80** will cover a majority of the floor area of the trailer **22** or at least a majority of the first compartment **24**. In further examples, a ratio of the width of the floor pan **80** to the minimum height of the sides **80***b* is no less than 16 and may be up to about 50. In yet a further example, the cavity **80***c* of the floor pan **80** has a volume of approximately two-hundred gallons and the minimum height of the sides **80***b* is no less than two inches.

Optionally, the floor pan **80** may include one or more drain ports in the bottom **80***a*, sides **80***b*, or both, to permit controlled drainage of spilled fluid or fuel from the floor pan **80** into a catch container.

As can be appreciated from the examples herein, the station **20** permits continuous hot-refueling with enhanced reliability. While there might generally be a tendency to choose wireless sensor communication for convenience, a hard-wired approach mitigates the potential for signal interference that can arise with wireless. Moreover, by hard-wiring the sensors through the hoses to the controller, wired communication lines are protected from exposure and do not pose additional concerns for workers on a site. Additionally,

the spatial layout of the station **20** permits enhanced station performance in combination with good packaging and aisle size for worker movement.

FIG. **9** illustrates a system **69** for remotely monitoring and/or managing at least one mobile distribution station **20** (A). It is to be appreciated that the system **69** may include additional mobile distribution stations, shown in phantom at **20** (B), **20** (C), and **20** (D) (collectively mobile distribution stations **20**), for example. The mobile distribution stations **20** may be located at a single work site or located across several different work sites S**1** and S**2**. Each mobile distribution station **20** is in communication with one or more servers **71** that are remotely located from the mobile distribution stations **20** and work sites S**1**/S**2**. In most implementations, the communication will be wireless.

The server **71** may include hardware, software, or both that is configured to perform the functions described herein. The server **71** may also be in communication with one or more electronic devices **73**. The electronic device **73** is external of or remote from the mobile fuel distribution stations **20**. For example, the electronic device **73** may be, but is not limited to, a computer, such as a desktop or laptop computer, a cellular device, or tablet device. The electronic device **73** may communicate and interact in the system **69** via data connectivity, which may involve internet connectivity, cellular connectivity, software, mobile application, or combinations of these.

The electronic device **73** may include a display **73***a*, such as an electronic screen, that is configured to display the fuel operating parameter data of each of the mobile distribution stations **20**. As an example, the electronic device **73** may display in real-time the operating parameter data of each of the mobile distribution stations **20** in the system **69** to permit remote monitoring and management control of the mobile distribution stations **20**. For instance, the operating parameter data may include fuel temperature, fuel pressure, fuel flow, total amount of fuel distributed, operational settings (e.g., low and high fuel level thresholds), or other parameters.

The server **71** may also be in communication with one or more cloud-based devices **75**. The cloud-based device **75** may include one or more servers and a memory for communicating with and storing information from the server **71**.

The server **71** is configured to communicate with the mobile distribution stations **20**. Most typically, the server **71** will communicate with the controller **52** of the mobile distribution station **20**. In this regard, the controller **52** of each mobile distribution station **20** may be include hardware, software, or both that is configured for external communication with the server **71**. For example, each controller **52** may communicate and interact in the system **69** via data connectivity, which may involve internet connectivity, cellular connectivity, software, mobile application, or combinations of these.

The server **71** is configured to receive operating parameter data from the mobile distribution stations **20**. The operating parameter data may include or represent physical measurements of operating conditions of the mobile distribution station **20**, status information of the mobile distribution station **20**, setting information of the mobile distribution station **20**, or other information associated with control or management of the operation of the mobile distribution station **20**.

For example, the server **71** utilizes the information to monitor and auto-manage the mobile distribution station **20**. The monitoring and auto-management may be for purposes of identifying potential risk conditions that may require shutdown or alert, purposes of intelligently enhancing operation, or purposes of reading fuel or fluid levels in real-time via the sensors **50**. As an example, the server **71** may utilize the information to monitor or display fuel or fluid levels, or determine whether the fuel operating parameter data is within a preset limit and send a control action in response to the operating parameter data being outside the preset limit. As will described in further detail below, the control action may be a shutdown instruction to the mobile fuel distribution stations **20**, an adjustment instruction to the mobile fuel distribution stations **20**, or an alert to the electronic device **73**.

FIG. **10** illustrates a workflow logic diagram of an example control method **77** which can be implemented with the system **69** or with other configurations of one or more mobile distribution stations **20** and one or more servers. In general, the illustrated method **77** can be used to provide a shutdown instruction or an alert if operating parameter data of one or more mobile distribution stations **20** is outside of a preset limit. For instance, if fuel pressure or fuel temperature in one of the mobile distribution stations **20** exceeds one or more limits, the method **77** shuts down the mobile distribution station **20** and/or sends an alert so that appropriate action can, if needed, be taken in response to the situation. In particular, in hot-refueling implementations, the ability to automatically shut down or to provide a remote alert may facilitate enhancement of reliable and safe operation.

Referring to FIG. **10**, one or more current or instantaneous operating parameters are read (i.e., by the controller **52**). An operating parameter may include, but is not limited to, fuel temperature and fuel pressure. Other parameters may additionally or alternatively be used, such as pump speed or power and fuel flow. Parameters may be first order parameters based on first order readings from sensor signals, or second order parameters that are derived or calculated from first order parameters or first order sensor signals. For instance, temperature is a first order parameter and direct detection of temperature to produce signals representative of temperature constitute first order sensor signals. The product of temperature and pressure, for example, is a second order parameter that is based on first order sensor signals of each of temperature and pressure. As will be appreciated, there may be additional types of second order parameters based on temperature, pressure, power, flow, etc., which may or may not be weighted in a calculation of a second order parameter.

In this example, the current operating parameter is compared with a prior operating parameter stored in memory in the controller **52**. A difference in the current operating parameter and the prior operating parameter is calculated to produce a change (delta) value in the operating parameter. The change value is used as the operating parameter data for control purposes in the method **77**. The operating parameter data thus represents the change in the operating parameter from the prior reading to the current reading. Use of the change value as the operating parameter data serves to reduce the amount of data that is to be sent in connection with the method **77**. For example, the actual operating parameter values may be larger than the change values and may thus require more memory and bandwidth to send than the change values. The change values are sampled and calculated at a predesignated interval rate. In this example, the interval rate is once per second. Each operating parameter is stored in memory for use as the next "prior" operating parameter for comparison with a subsequent "new" operating parameter reading. The controller **52** may be programmed to perform the above steps. As will be appreciated,

the steps above achieve data efficiency, and actual values could alternatively or additionally be used if memory and bandwidth permit.

Each operating parameter data reading (i.e., change value) is published or sent via IoT (Internet of Things) Gateway to an IoT Platform, which may be implemented fully or partially on the server **71** and cloud device **75**. The operating parameter data may also contain additional information, such as but not limited to, metadata with time stamp information and identification of the individual mobile distribution station **20**. In this example, the operating parameter data of interest is associated with fuel pressure and fuel temperature. In the method **77**, the operating parameter data for fuel temperature and fuel pressure are compared to, respectively, a preset fuel temperature shutdown limit and a preset fuel pressure shutdown limit. The shutdown limits may be temperature and pressure limits corresponding to rated limits of the pump **30**, fuel line **32**, and manifold **38**, for example.

If the temperature or pressure are outside of the preset fuel temperature or pressure shutdown limits, the method **77** initiates a shutdown event. In this example, the shutdown event includes identifying the particular mobile distribution station **20** associated with the temperature or pressure that is outside of the preset limit, forming a shutdown instruction message, and publishing or sending the shutdown instruction message via the IoT Gateway to the corresponding identified mobile distribution station **20**.

Upon receiving the shutdown instruction message, the controller **52** of the identified mobile distribution station **20** validates and executes the shutdown instruction. For instance, shutdown may include shutting off the pump **30** and closing all of the control valves **44**. In this example, the method **77** includes a timing feature that waits for confirmation of shutdown. Confirmation may be generated by the controller **52** performing an electronic check of whether the pump **30** is off and the control valves **44** are closed. Confirmation may additionally or alternatively involve manual feedback via input into the controller **52** by a worker at the identified mobile distribution station **20**.

Once shutdown is confirmed by the controller **52**, confirmation of shutdown is published or sent via the Iot Gateway to the IoT Platform for subsequent issuance of an alert. If there is no confirmation of shutdown by a maximum preset time threshold, a non-confirmation of shutdown is published or sent for subsequent issuance of an alert.

If the temperature and/or pressure is not outside of the preset fuel temperature or pressure shutdown limits, the method **77** in this example continues to determine whether the fuel temperature and fuel pressure with are, respectively, outside of a preset fuel temperature threshold limit and a preset fuel pressure threshold limit. The threshold limits will typically be preset at levels which indicate a potential for shutdown conditions. For example, the threshold limits may be intermediate temperature or pressure levels which, if exceeded, may indicate an upward trend in temperature or pressure toward the shutdown limits. In one example, the threshold limits are rate of change thresholds. For instance, a change value in temperature and/or pressure that exceeds a corresponding threshold change limit may be indicative that temperature and/or pressure is rapidly elevating toward the shutdown condition.

In response to the temperature and/or pressure being outside of the preset fuel temperature or pressure threshold limits, the method **77** initiates an alert event. In this example, the alert event includes initiating an event notification. In the event notification, the method **77** conducts a lookup of notification channels and then issues an alert via one or more selected notification channels, such as an alert on the display **73***a*. As an example, the notification channels may be selected by user preferences and may include alerts by email, SMS (short message service), and/or mobile device app notification (e.g., banners, badges, home screen alerts, etc.). The event notification is also used for alerts of confirmation and non-confirmation of shutdown. The method **77** thus provides capability to nearly instantaneously issue an alert that can be immediately and readily viewed in real-time on the electronic device **73** so that appropriate action, if needed, can be taken. In one example, such actions may include adjustment of operation settings of the mobile distribution station **20**, which may be communicated and implemented via the system **69** from the electronic device **73** to the mobile distribution station **20**.

FIG. **11** illustrates a workflow logic diagram of an example control management method **79** which can be implemented with the method **77** and with the system **69** or with other configurations of one or more mobile distribution stations **20** and one or more servers. For example, the method **79** is used to identify shutdown conditions and/or remotely intelligently auto-manage operation of one or more mobile distribution stations **20**. The initial portion of the method **79** with respect to generating operating parameters data may be similar to the method **77**; however, the method **79** uses the operating parameter data to calculate an efficiency score and identify shutdown conditions or other actions to be taken in response to the efficiency score. For example, the efficiency score is a second order parameter and is a calculation based on multiple fuel operating parameters selected from fuel temperature, fuel pressure, fuel flow, and time. The efficiency score is then compared to an efficiency score shutdown limit. If the calculated efficiency score exceeds the limit, the method **79** initiates the shutdown event as described above. As an example, the efficiency score is the product of a safety score multiplied by one or more of a temperature score, a pressure score, a flow rate score, a tank level score, or the sum of two or more of these scores. For instance, the efficiency score is as shown in Equation I below.

$$\text{Efficiency Score}=\text{Safety Score}\times(\text{Temperature Score}+\text{Pressure Score}+\text{Flow Rate Score}+\text{Tank Level Score}). \qquad \text{Equation I}$$

In one example, the safety score is a product of a safety factor and logic values of one or zero for each of the temperature score, the pressure score, the flow rate score, and the tank level score. Thus, if any of the temperature score, the pressure score, the flow rate score, or the tank level score fails, resulting in a logic value of zero, the efficiency score will be zero. In response to an efficiency score of zero, the method **79** initiates the shutdown event as described above. The logic values are assigned according to whether the given parameter is within a predetermined minimum/maximum range. If the parameter is within the range, the logic value is one and if the parameter is outside of the range, the value is zero. As an example, the safety score may be determined by:

$$\text{Safety Score}=(\text{Safety Check Positive Response}/\text{Total Safety Checks})*(\text{IF}(\text{Temperature Reading between MIN LIMIT and MAX LIMIT})\text{THEN 1ELSE 0}))*(\text{IF}(\text{Pressure Reading between MIN LIMIT and MAX LIMIT})\text{THEN 1ELSE 0}))*(\text{IF}(\text{Flow Rate Reading between MIN LIMIT and MAX LIMIT})\text{THEN 1ELSE 0}))*(\text{IF}(\text{Tank Inventory Reading between MIN LIMIT and MAX LIMIT})\text{THEN 1ELSE 0})),$$

wherein

Temperature Score=(((Temperature Reading−Min Limit)/Temperature Reading)+((Max Limit+Temperature Reading)/Temperature Reading)))/2,

Pressure Score=(((Pressure Reading−Min Limit)/Pressure Reading)+((Max Limit+Pressure Reading)/Pressure Reading)))/2,

Flow Rate Score=(((Flow Rate Reading−Min Limit)/Flow Rate Reading)+((Max Limit+Flow Rate Reading)/Flow Rate Reading)))/2, and

Tank Level Score=(((Tank Level Reading−Min Limit)/Tank Level Reading)+((Max Limit+Tank Level Reading)/Tank Level Reading)))/2.

In one example, the safety factor includes a calculation based on safety checks of a mobile distribution station **20**. For instance, the safety factor is the quotient of positive or passing safety checks divided by the total number of safety check made. A safety check may involve periodic validation of multiple parameters or conditions on the site of a station **20** and/or in the station **20**. As examples, the safety check may include validation that electrical power supply is fully functional (e.g., a generator), validation of oil levels (e.g., in a generator), validation of whether there are any work obstructions at the site, etc. Thus, each safety check may involve validation of a set of parameters and conditions. If validation passes, the safety check is positive and if validation does not pass the safety check is negative. As an example, if 5 safety checks are conducted for a station **20** and four of the checks pass and one does not pass, the safety factor is equal to four divided by five, or 0.8.

The method **79** also uses the efficiency score to actively intelligently auto-manage operation of one or more of the mobile distribution stations **20**. For example, the efficiency score is compared in the method **79** with an efficiency score threshold limit or efficiency score range. If the efficiency score is outside of the limit or range, the method **79** initiates an adjustment event to adjust settings of the operating parameters of the mobile distribution station **20**. For example, pumping rate or power may be changed to increase or decrease fuel pressure. In further examples in the table below, preset actions are taken in response to efficiency scores within preset ranges.

Efficiency Score	Action
<=1	SHUTDOWN
>1 AND <=2	ALERT
>2 AND <=3	ADJUST SETTINGS
>3 AND <=4	NO ACTION

The adjustment event may include forming an adjustment instruction message and publishing or sending the adjustment instruction message to the mobile distribution station **20** via the IoT Gateway. Upon receiving the adjustment instruction message the controller **52** of the mobile distribution station **20** validates and executes the message. The message constitutes a control action to change one or more of the operating parameters to move the efficiency score within the limit or range. As an example, pumping rate is changed to change fuel pressure. Other parameters may additionally or alternatively be adjusted to change the fuel efficiency score, such as but not limited to, fuel tank upper and lower thresholds, sequence of opening/closing control valves **44**, and number of control valves **44** that may be open at one time. Thus, once implemented, the method **79** can serve to auto-adjust operation of one or more of the mobile distribution stations **20**, without human intervention, to achieve enhanced or optimize fuel distribution.

In one example, a rate of fuel consumption of one or more pieces of the equipment may be calculated, and the upper and/or lower fuel level threshold settings are changed in response to the calculated rate of fuel consumption. For instance, if consumption is lower or higher than a given fuel level threshold setting warrants, the fuel level threshold setting is responsively auto-adjusted up or down for more efficient operation. For a low consumption rate, there may be a downward adjustment of the lower fuel level threshold, since there is lower likelihood that the low consumption rate will lead to a fully empty condition in the equipment. Similarly, for a high consumption rate, there may be an upward adjustment of the lower fuel level threshold, since there is higher likelihood that the high consumption rate will lead to a fully empty condition in the equipment. Thus, the mobile distribution station **20** can be operated more efficiently and safely by distributing fuel at proper times to ensure filling the equipment with desired safety margins.

Similar to the shutdown instruction message described above, the method **79** may include a timing feature that waits for confirmation of adjustment. Once adjustment is confirmed by the controller **52**, confirmation of adjustment is published or sent via the Iot Gateway to the IoT Platform for subsequent issuance of an alert. If there is no confirmation of adjustment by a maximum preset time threshold, a non-confirmation of adjustment is published or sent for subsequent issuance of an alert. In further examples, the method **79** may exclude use of the efficiency score for purposes of shutdown or for purposes of intelligent auto-management. That is, the method **79** may employ the efficiency score for only one or the other of shutdown or intelligent auto-management.

Additionally or alternatively, the system **69** with one or more mobile distribution stations **20** and one or more servers may be used for centralized, intelligent auto-filling. For example, fuel levels may be tracked in real-time or near real-time. When a fuel level associated with one of the stations **20** reaches the lower threshold, described above, an instruction may be sent via the system **69** to active the pump **30** and open the appropriate control valve **44**. Moreover, the system **69** can ensure that there is minimal or zero delay time from the time of identifying the low threshold to the time that filling begins. Thus, at least a portion of the functionality of the controllers **52** may be remotely and centrally based in the server of the system **69**.

Although a combination of features is shown in the illustrated examples, not all of them need to be combined to realize the benefits of various embodiments of this disclosure. In other words, a system designed according to an embodiment of this disclosure will not necessarily include all of the features shown in any one of the Figures or all of the portions schematically shown in the Figures. Moreover, selected features of one example embodiment may be combined with selected features of other example embodiments.

The preceding description is exemplary rather than limiting in nature. Variations and modifications to the disclosed examples may become apparent to those skilled in the art that do not necessarily depart from this disclosure. The scope of legal protection given to this disclosure can only be determined by studying the following claims.

What is claimed is:

1. A distribution station comprising:

a mobile trailer;

a pump on the mobile trailer;

first and second manifolds on the mobile trailer and fluidly connected with the pump;

a plurality of reels on the mobile trailer;

a plurality of hoses, each said hose connected with a different one of the reels, wherein a portion of the reels are connected to be fed from the first manifold and another portion of the reels are connected to be fed from the second manifold;

a plurality of valves on the mobile trailer, each said valve situated between one of the first or second manifolds and a respective different one of the reels;

a plurality of fluid level sensors, each said fluid level sensor being associated with a different one of the hoses; and

a controller configured to individually open and close the valves responsive to the fluid level sensors.

2. The distribution station as recited in claim **1**, wherein the reels are arranged on first and second opposed sides in the mobile trailer.

3. The distribution station as recited in claim **2**, further comprising an aisle walkway down the middle of the mobile trailer between the reels on the first and second opposed sides in the mobile trailer.

4. The distribution station as recited in claim **3**, further comprising a floor pan in the mobile trailer.

5. The distribution station as recited in claim **1**, wherein the reels on each of the first and second opposed sides are arranged in upper and lower rows of reels.

6. The distribution station as recited in claim **1**, further comprising a register configured to measure an amount of fluid from the pump.

7. The distribution station as recited in claim **6**, wherein the register is in communication with the controller.

8. The distribution station as recited in claim **7**, wherein the controller is configured to track the amount of fluid provided from the pump over a selected time interval.

9. The distribution station as recited in claim **8**, wherein the controller is configured to trigger generation of an invoice for the amount of fluid.

10. The distribution station as recited in claim **8**, wherein the register is an electronic register that has a resolution of about 0.1 gallons.

11. A distribution station comprising:

a mobile trailer;

at least one pump on the mobile trailer;

at least one manifold on the mobile trailer and fluidly connected with the at least one pump;

a plurality of reels on the mobile trailer, each said reel individually connected with the at least one manifold;

a plurality of hoses, each said hose connected with a different one of the reels;

a plurality of valves on the mobile trailer, each said valve situated between the at least one manifold and a respective different one of the reels;

a plurality of fluid level sensors, each said fluid level sensor connectable to an end of a different one of the hoses; and

a controller configured to individually open and close the valves responsive to the fluid level sensors.

12. The distribution station as recited in claim **11**, wherein the at least one pump includes two pumps.

13. The distribution station as recited in claim **12**, wherein the two pumps are arranged in fluid series.

14. The distribution station as recited in claim **11**, further comprising a register configured to measure an amount of fluid from the pump.

15. The distribution station as recited in claim **14**, wherein the register is in communication with the controller.

16. The distribution station as recited in claim **15**, wherein the controller is configured to track the amount of fluid provided from the pump over a selected time interval.

17. The distribution station as recited in claim **16**, wherein the controller is configured to trigger generation of an invoice for the amount of fluid.

18. The distribution station as recited in claim **16**, wherein the register is an electronic register that has a resolution of about 0.1 gallons.

19. A distribution station comprising:

a mobile trailer;

at least one pump on the mobile trailer;

at least one manifold on the mobile trailer and fluidly connected with the at least one pump;

a register between the at least one pump and the at least one manifold;

a plurality of reels on the mobile trailer and connected with the at least one manifold;

a plurality of hoses, each said hose connected with a different one of the reels;

a plurality of valves on the mobile trailer, each said valve situated between the at least one manifold and a respective different one of the reels;

a plurality of fluid level sensors, each said fluid level sensor being associated with a different one of the hoses; and

a controller configured to individually open and close the valves responsive to the fluid level sensors.

20. The distribution station as recited in claim **19**, wherein the register is configured to generate measurement data representative of an amount of fluid provided from the at least one pump, and the register is in communication with the controller to send the measurement data to the controller.

* * * * *

EXHIBIT 4

US010513426B2

(12) **United States Patent**
Shock

(10) **Patent No.: US 10,513,426 B2**
(45) **Date of Patent: Dec. 24, 2019**

(54) **MOBILE DISTRIBUTION STATION WITH FAIL-SAFES**

(71) Applicant: **Fuel Automation Station, LLC**, Birmingham, MI (US)

(72) Inventor: **Ricky Dean Shock**, Victoria, TX (US)

(73) Assignee: **FUEL AUTOMATION STATION, LLC**, Birmingham, MI (US)

(*) Notice: Subject to any disclaimer, the term of this patent is extended or adjusted under 35 U.S.C. 154(b) by 0 days.

(21) Appl. No.: **15/703,285**

(22) Filed: **Sep. 13, 2017**

(65) **Prior Publication Data**

US 2018/0099858 A1 Apr. 12, 2018

Related U.S. Application Data

(63) Continuation of application No. 15/290,400, filed on Oct. 11, 2016, now Pat. No. 9,790,080.

(51) **Int. Cl.**
B67D 7/40 (2010.01)
B67D 7/32 (2010.01)
(Continued)

(52) **U.S. Cl.**
CPC ***B67D 7/3218*** (2013.01); ***B67D 7/3272*** (2013.01); ***B67D 7/36*** (2013.01); *B67D 7/40* (2013.01); *B67D 7/845* (2013.01)

(58) **Field of Classification Search**
CPC B67D 7/3218; B67D 7/84; B67D 7/36; B67D 7/3272
See application file for complete search history.

(56) **References Cited**

U.S. PATENT DOCUMENTS

2,340,070 A 1/1944 McCauley et al.
2,516,150 A 7/1950 Samiran
(Continued)

FOREIGN PATENT DOCUMENTS

DE 1147397 4/1963
DE 20106400 10/2001
(Continued)

OTHER PUBLICATIONS

Oilfield Business: Technologies. Frac Shack Inc. introduces world's first Bi-Fuel Distribution Unit for hydraulic fracturing industry. Texas Oil & Gas: The National Magazine for Oil & Gas in Texas. vol. 4, Issue 2. 2015. p. 27.
(Continued)

Primary Examiner — Marina A Tietjen
Assistant Examiner — Paul J Gray
(74) *Attorney, Agent, or Firm* — Carlson, Gaskey & Olds, P.C.

(57) **ABSTRACT**

A distribution station includes a mobile trailer, a pump on the mobile trailer, a manifold on the mobile trailer and connected with the pump, a plurality of hoses in communication with the manifold, and a plurality of valves on the mobile trailer. Each of the valves is situated between the manifold and a respective different one of the hoses. Each of a plurality of fluid level sensors is associated with a respective different one of the hoses. The fluid level sensors are operable to detect respective different fluid levels. A controller is configured to operate the valves responsive to signals from the fluid level sensors, activate and deactivate the pump, identify whether there is a risk condition based upon at least one variable operating parameter, and deactivate the pump responsive to the risk condition.

12 Claims, 19 Drawing Sheets

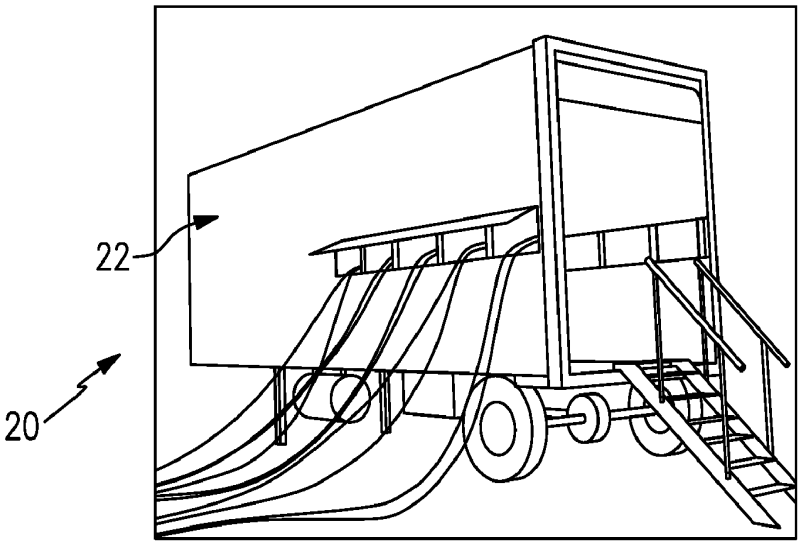

(51) **Int. Cl.**

B67D 7/36	(2010.01)
B67D 7/84	(2010.01)

(56) **References Cited**

U.S. PATENT DOCUMENTS

2,769,572	A	11/1956	Harman et al.
2,777,461	A	1/1957	Wildhaber
2,966,921	A	1/1961	Whiteman
3,028,010	A	4/1962	Headrick
3,136,295	A	6/1964	Gramo
3,547,141	A	12/1970	Alexander
3,605,798	A	9/1971	Green et al.
3,618,643	A	11/1971	Thomson
3,625,399	A	12/1971	Heisler
3,677,284	A	7/1972	Mendez
3,881,509	A	5/1975	Newton
4,139,019	A	2/1979	Bresie et al.
4,284,210	A	8/1981	Horak
4,511,311	A	4/1985	Olson
4,591,115	A	5/1986	DeCarlo
4,651,788	A	3/1987	Grosskreuz et al.
4,728,005	A	3/1988	Jacobs et al.
4,930,665	A	6/1990	Devine
5,406,988	A	4/1995	Hopkins
5,454,408	A	10/1995	DiBella et al.
5,465,766	A	11/1995	Siegele et al.
5,503,199	A	4/1996	Whitley, II et al.
5,538,051	A	7/1996	Brown et al.
5,551,309	A	9/1996	Goossens et al.
5,651,400	A	7/1997	Corts et al.
5,660,358	A	8/1997	Grafwallner et al.
5,708,424	A	1/1998	Orlando et al.
5,749,339	A	5/1998	Graham et al.
5,927,603	A	7/1999	McNabb
5,884,675	A	12/1999	Krasnov
6,098,646	A	8/2000	Hennemann et al.
6,206,056	B1	3/2001	Lagache
6,564,615	B1	5/2003	Carter
6,601,000	B1	7/2003	Barlian et al.
6,651,706	B2	11/2003	Litt
6,697,705	B2	2/2004	Johnson et al.
6,755,225	B1	6/2004	Niedwiecki et al.
6,761,194	B1	7/2004	Blong
6,779,569	B1	8/2004	Teer, Jr. et al.
6,786,245	B1	9/2004	Eichelberger et al.
7,063,276	B2	6/2006	Newton
7,106,026	B2	9/2006	Moore
7,353,808	B2	4/2008	Kakoo
7,415,995	B2	8/2008	Plummer et al.
7,458,543	B2	12/2008	Cutler et al.
7,568,507	B2	8/2009	Farese et al.
7,602,143	B2	12/2009	Capizzo
7,628,182	B2	12/2009	Poulter
7,937,215	B2	5/2011	Humphrey
7,938,151	B2	5/2011	Hockner
8,448,750	B2	5/2013	Gaugush et al.
9,346,662	B2	5/2016	Van Vliet et al.
9,371,830	B2	6/2016	Moffitt, Jr.
9,371,831	B2	6/2016	Moffitt, Jr.
2001/0017815	A1	8/2001	Ackermann et al.
2005/0109561	A1	5/2005	Chopra
2007/0079891	A1	4/2007	Farese et al.
2007/0164031	A1	7/2007	Holz
2007/0181212	A1	8/2007	Fell
2009/0314384	A1	12/2009	Brakefield et al.
2011/0197988	A1	8/2011	Van Vliet et al.
2016/0076533	A1	3/2016	Moffitt, Jr.

FOREIGN PATENT DOCUMENTS

DE	10309307	9/2004
DE	102006025025	12/2006
DE	102006038652	2/2008
EP	0161042	11/1985
EP	0433041	6/2001
GB	2485832	5/2012
RU	28347	3/2003
RU	91135	1/2010
RU	2452668	1/2012
SU	949644	8/1982
WO	0177006	10/2001
WO	03029721	4/2003
WO	03093118	11/2003
WO	2006005686	1/2006
WO	2006116572	11/2006
WO	2007087849	8/2007
WO	2008083830	7/2008
WO	2009026607	3/2009
WO	20090608065	6/2009

OTHER PUBLICATIONS

Frac Shack International. Publications & Endorsements. Retrieved Aug. 23, 2016 from: http://www.fracshack.com.

Frac Shack International. Technology. Retrieved Aug. 23, 2016 from: http://www.fracshack.com.

Frac Shack International. Design Benefits. Retrieved Aug. 23, 2016 from: http://www.fracshack.com.

Frac Shack International. Service. Retrieved Aug. 23, 2016 from: http://www.fracshack.com.

Frac Shack International. Frac Shack Series—Series A. Retrieved Aug. 23, 2016 from: http://www.fracshack.com.

Frac Shack International. Frac Shack Series—Series B. Retrieved Aug. 23, 2016 from: http://www.fracshack.com.

Frac Shack International. Frac Shack Series—Series C. Retrieved Aug. 23, 2016 from: http://www.fracshack.com.

Frac Shack International. Frac Shack Series—Series D. Retrieved Aug. 23, 2016 from: http://www.fracshack.com.

Frac Shack International. Frac Shack Series—Series E. Retrieved Aug. 23, 2016 from: http://www.fracshack.com.

Frac Shack International. Frac Shack Series—Series EG. Retrieved Aug. 23, 2016 from: http://www.fracshack.com.

Mann Tek. Dry Disconnect Couplings. Retrieved Jul. 22, 2016 from: http://www.manntek.com/products/drydisconnectcouplings p. 1-4.

Mann Tek. Dry Aviation Couplings. Retrieved Jul. 22, 2016 from: http://www.manntek.com/products/dryaviationcouplings p. 1-4.

Waterman, J. (2013). Better Safe than Sorry: Frac Shack a welcome addition to the oil patch. Jan. 2, 2013. Retrieved Aug. 23, 2016 from: http://www.pipelinenewsnorth.ca/better-safe-than-sorry-1.1123066.

Shimazaki, H. (1986). Development of centralized fueling and management system of kerosene heating machine. Nisseki Technical Review, vol. 28(4). Jul. 1986. pp. 184-188.

Technical Document. Surface vehicle standard. SAE International. Sep. 2014. pp. 1-5.

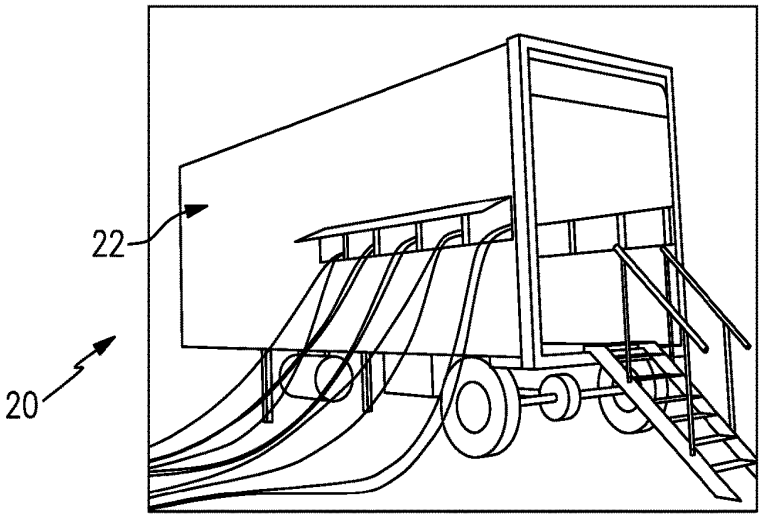
22
20

FIG.1

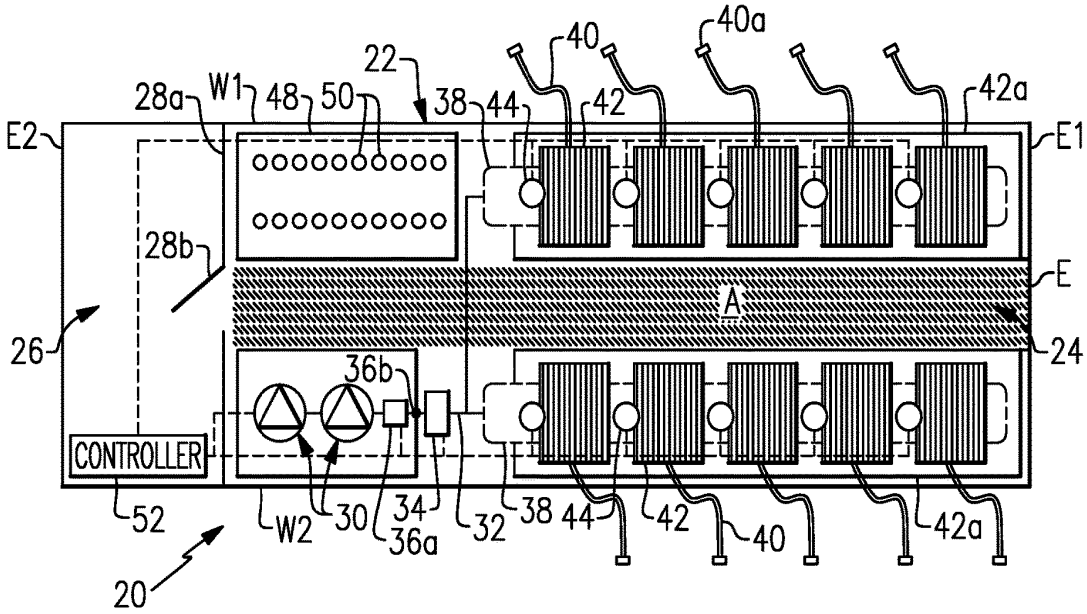
40
40a
22
28a
W1
48
50
38
44
42
42a
E2
E1
28b
E
A
26
24
36b
CONTROLLER
52
W2
30
34
36a
32
38
44
42
40
42a
20

FIG.2

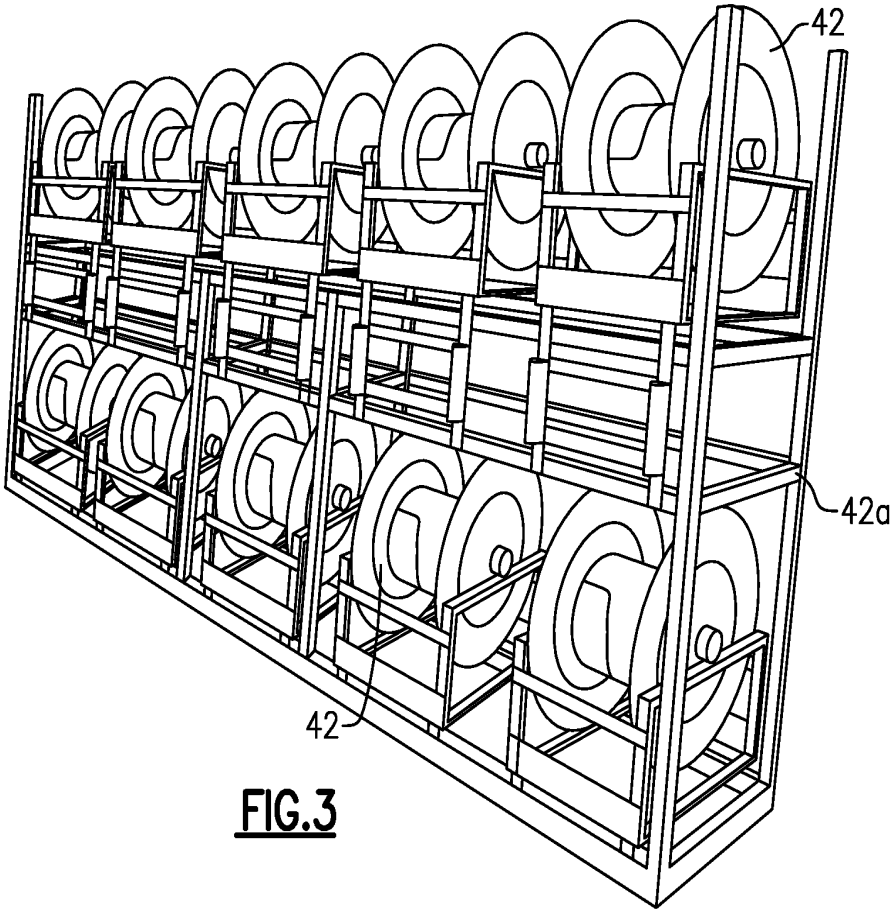

FIG.3

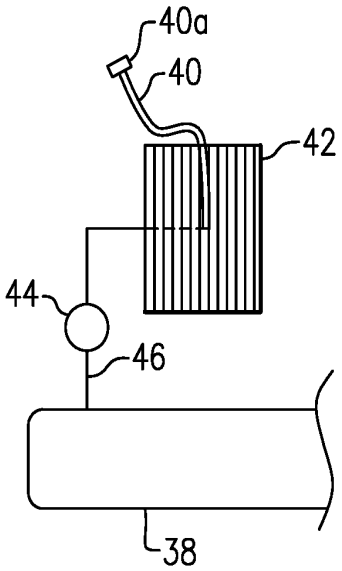

FIG.4

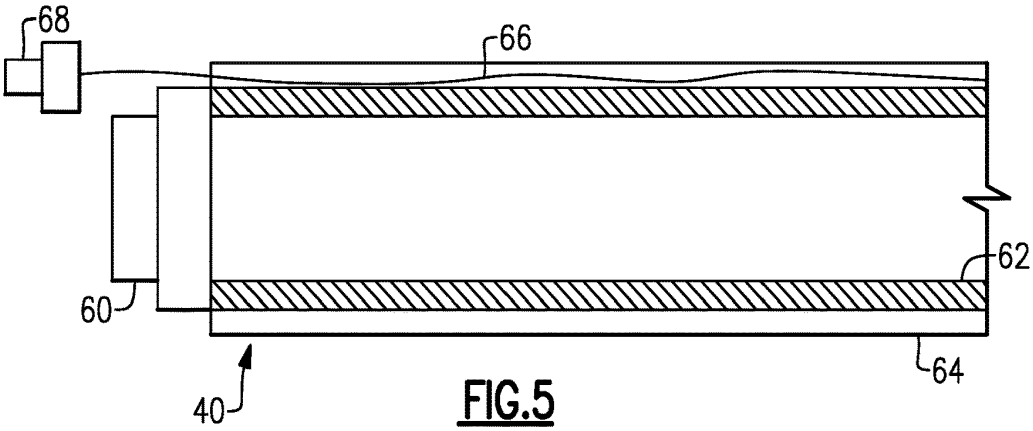

FIG.5

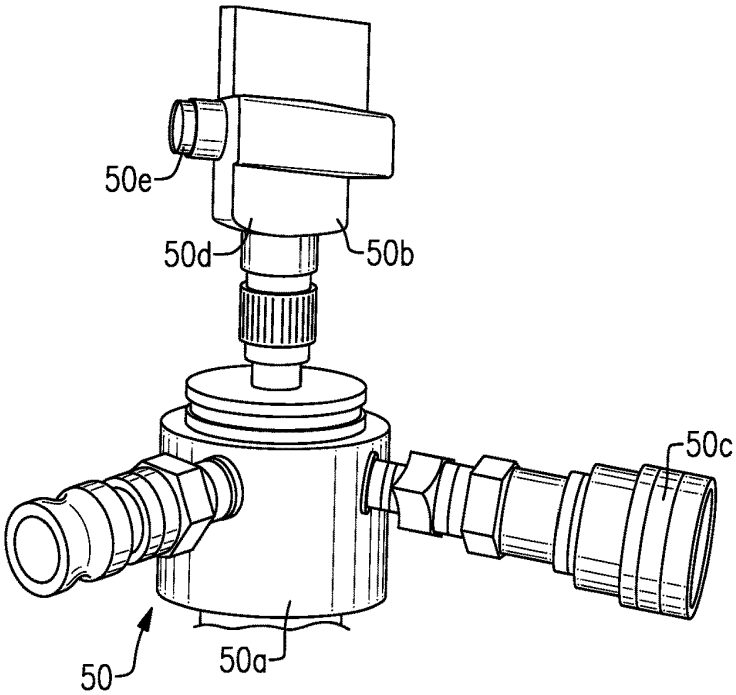

FIG.6

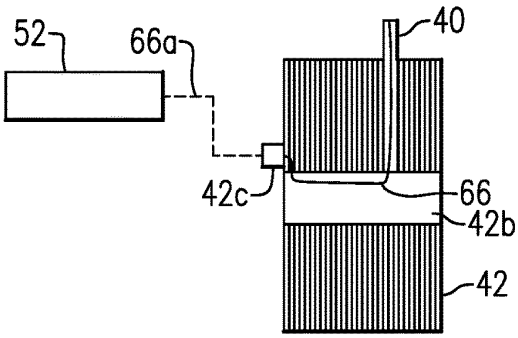

FIG.7

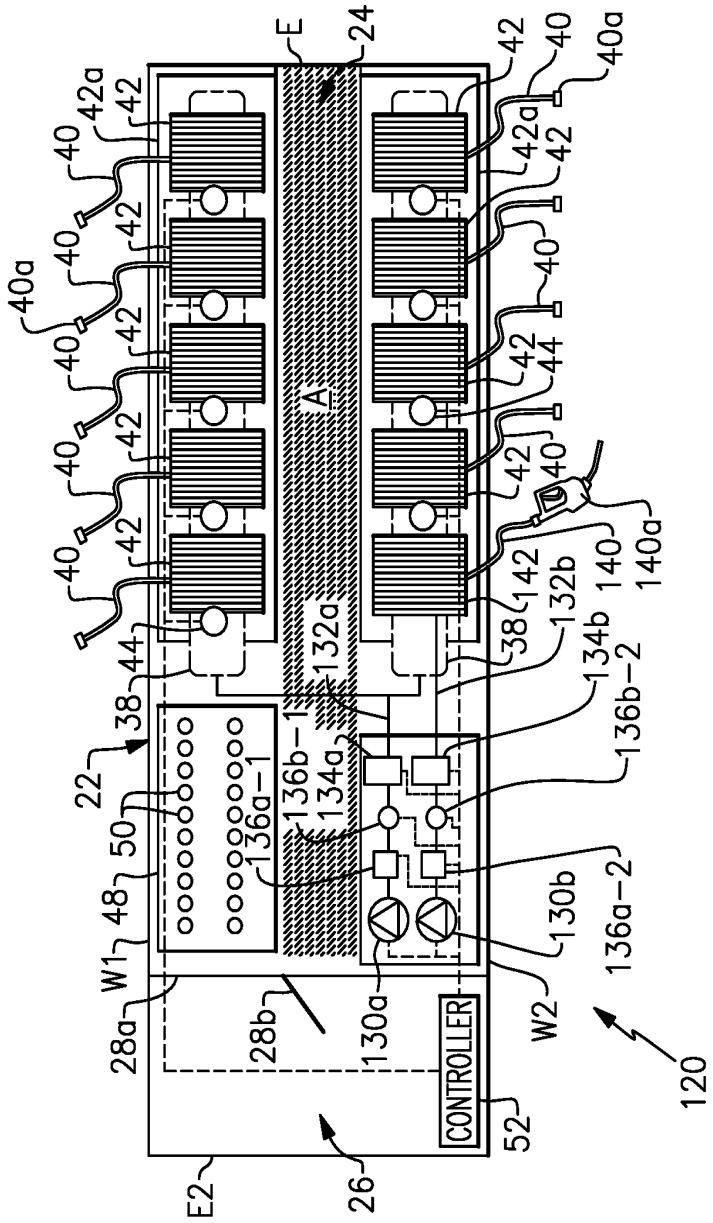
E
24
42
40
40a
42a
A
44
38
142
140
140a
132a
132b
134b
136b-2
136b-1
134a
136a-1
22
50
48
W1
28a
28b
130a
130b
136a-2
W2
CONTROLLER
52
120
26
E2

FIG.8

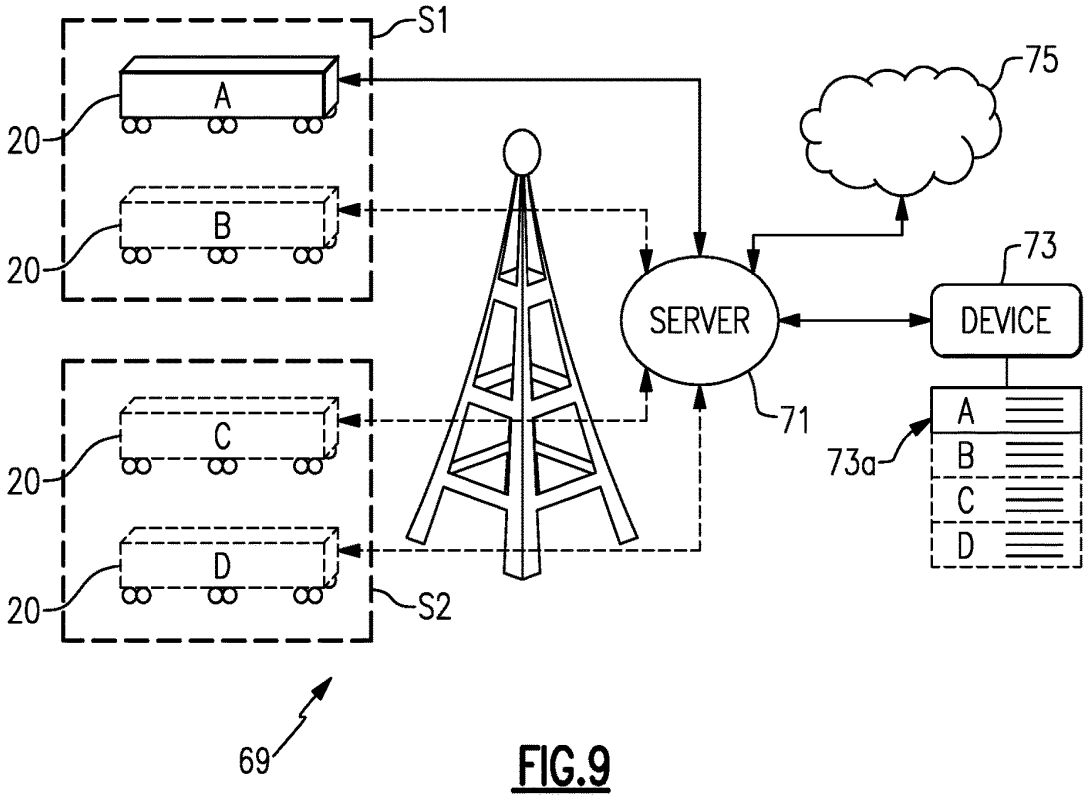

FIG.9

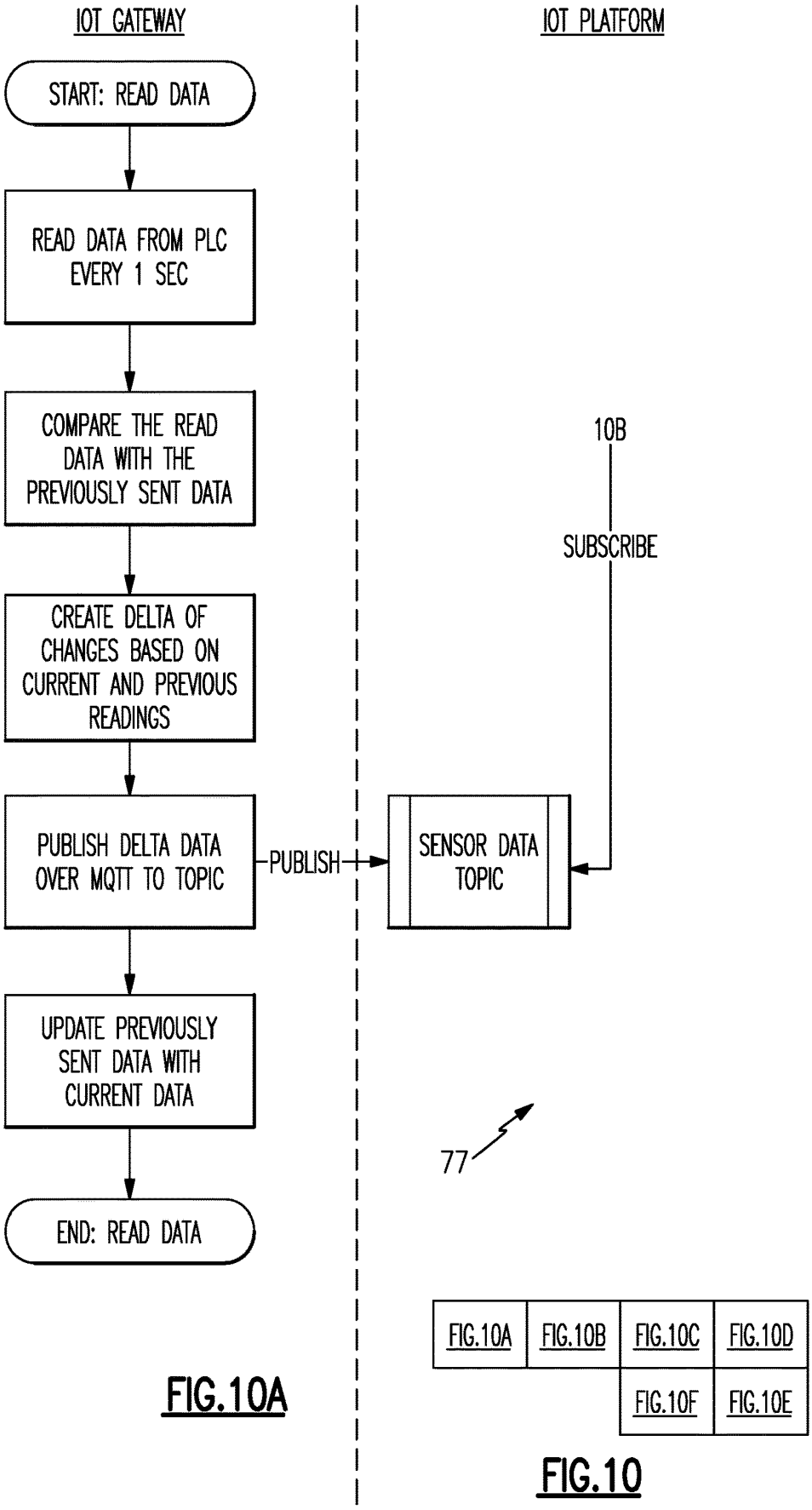

FIG.10A

FIG.10

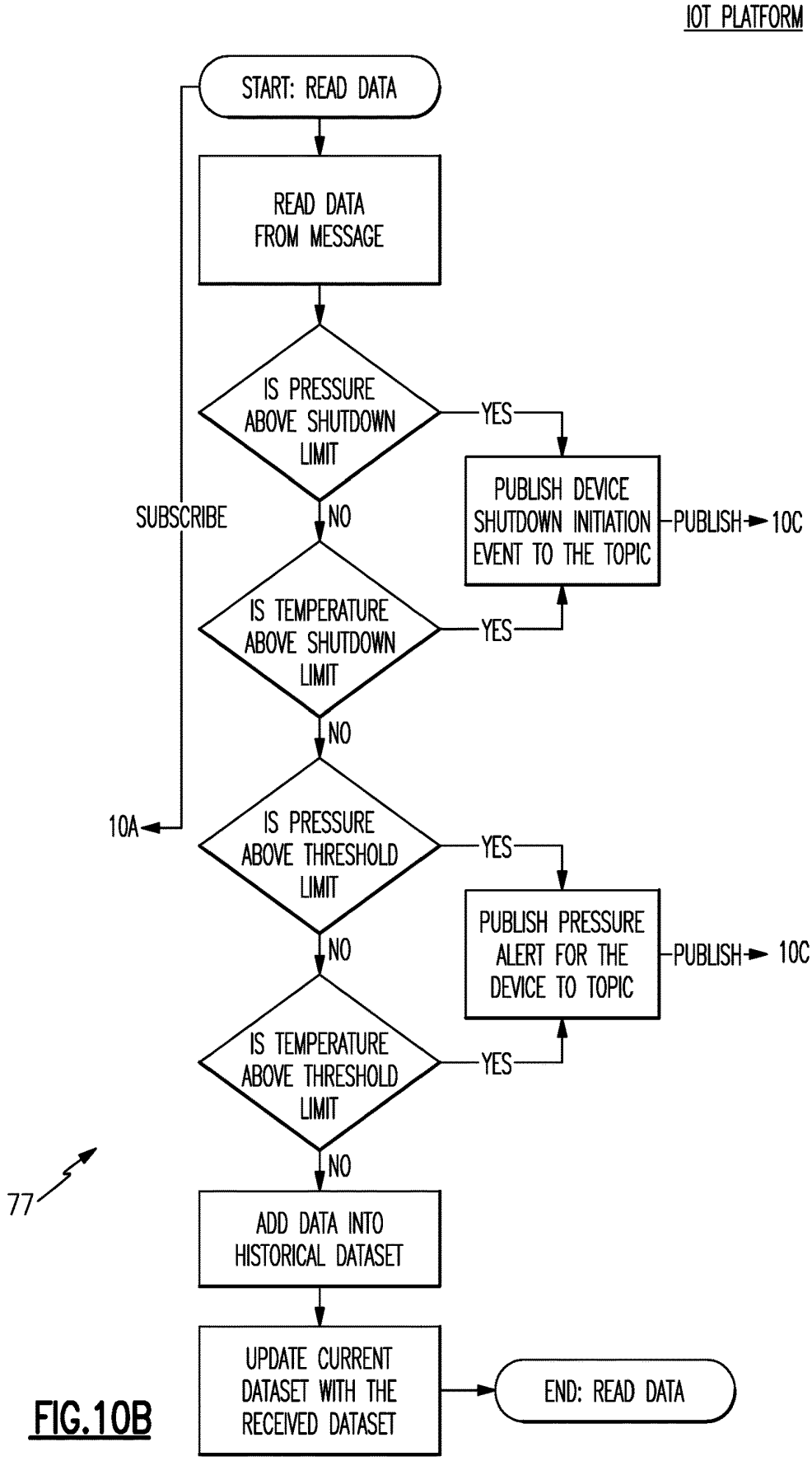
IOT PLATFORM
START: READ DATA
READ DATA FROM MESSAGE
IS PRESSURE ABOVE SHUTDOWN LIMIT
YES
PUBLISH DEVICE SHUTDOWN INITIATION EVENT TO THE TOPIC
PUBLISH
10C
SUBSCRIBE
NO
IS TEMPERATURE ABOVE SHUTDOWN LIMIT
YES
NO
10A
IS PRESSURE ABOVE THRESHOLD LIMIT
YES
PUBLISH PRESSURE ALERT FOR THE DEVICE TO TOPIC
PUBLISH
10C
NO
IS TEMPERATURE ABOVE THRESHOLD LIMIT
YES
NO
77
ADD DATA INTO HISTORICAL DATASET
UPDATE CURRENT DATASET WITH THE RECEIVED DATASET
END: READ DATA

FIG.10B

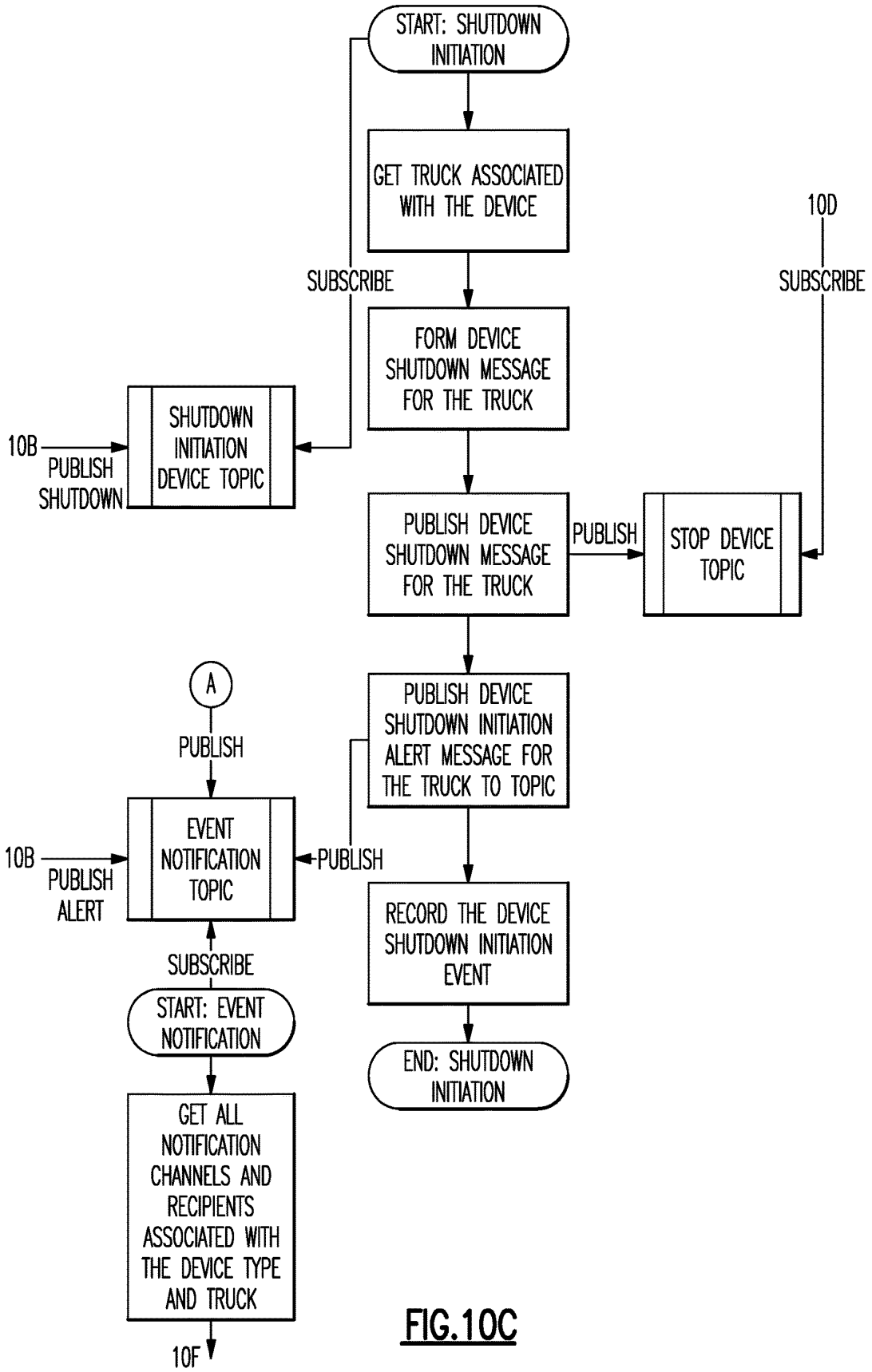
START: SHUTDOWN INITIATION
GET TRUCK ASSOCIATED WITH THE DEVICE
SUBSCRIBE
FORM DEVICE SHUTDOWN MESSAGE FOR THE TRUCK
10D
SUBSCRIBE
10B
PUBLISH SHUTDOWN
SHUTDOWN INITIATION DEVICE TOPIC
PUBLISH DEVICE SHUTDOWN MESSAGE FOR THE TRUCK
PUBLISH
STOP DEVICE TOPIC
A
PUBLISH
PUBLISH DEVICE SHUTDOWN INITIATION ALERT MESSAGE FOR THE TRUCK TO TOPIC
10B
PUBLISH ALERT
EVENT NOTIFICATION TOPIC
PUBLISH
RECORD THE DEVICE SHUTDOWN INITIATION EVENT
SUBSCRIBE
START: EVENT NOTIFICATION
END: SHUTDOWN INITIATION
GET ALL NOTIFICATION CHANNELS AND RECIPIENTS ASSOCIATED WITH THE DEVICE TYPE AND TRUCK
10F

FIG.10C

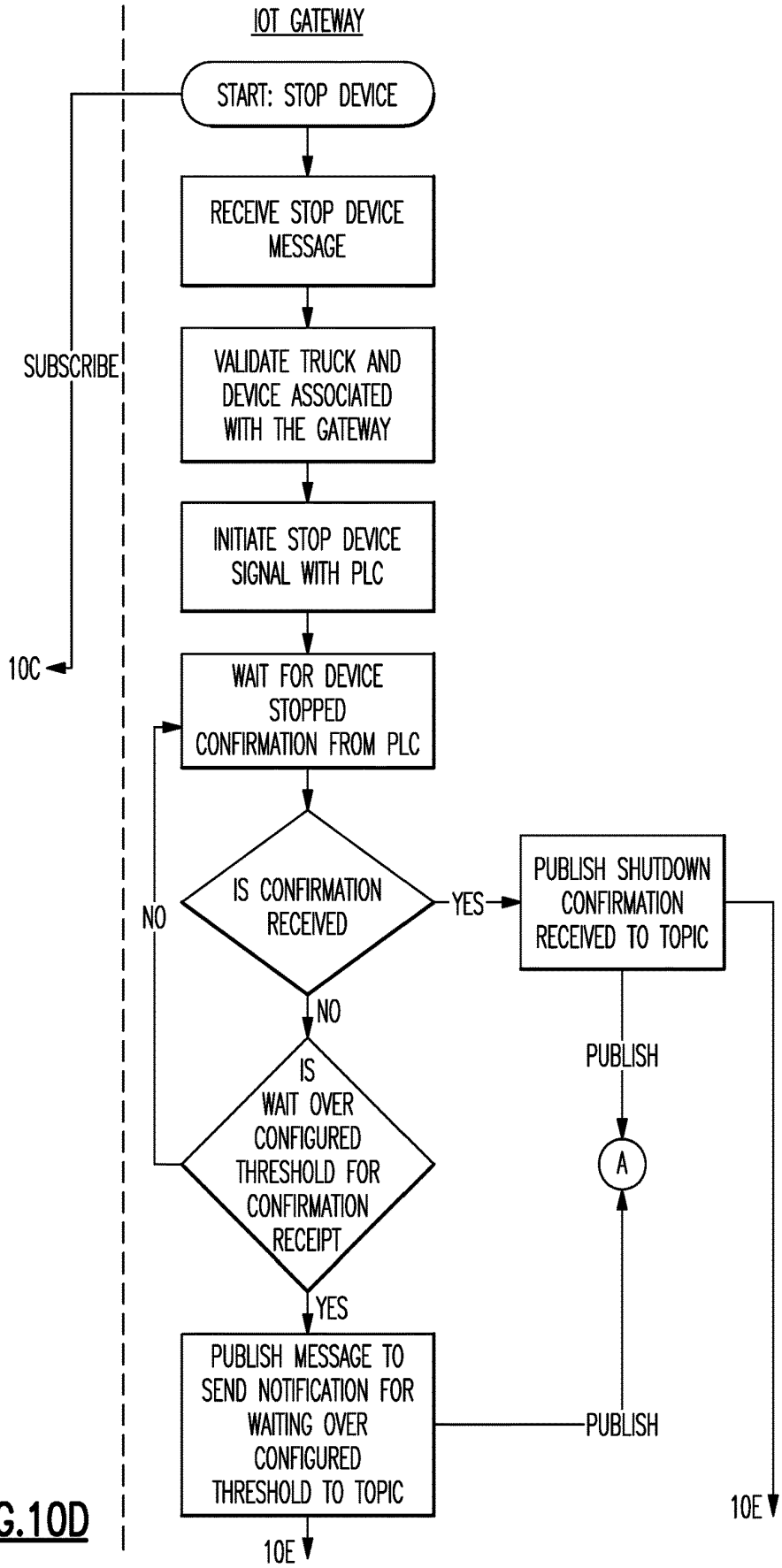
IOT GATEWAY
START: STOP DEVICE
RECEIVE STOP DEVICE MESSAGE
VALIDATE TRUCK AND DEVICE ASSOCIATED WITH THE GATEWAY
INITIATE STOP DEVICE SIGNAL WITH PLC
WAIT FOR DEVICE STOPPED CONFIRMATION FROM PLC
IS CONFIRMATION RECEIVED
YES
NO
PUBLISH SHUTDOWN CONFIRMATION RECEIVED TO TOPIC
PUBLISH
A
IS WAIT OVER CONFIGURED THRESHOLD FOR CONFIRMATION RECEIPT
NO
YES
PUBLISH MESSAGE TO SEND NOTIFICATION FOR WAITING OVER CONFIGURED THRESHOLD TO TOPIC
PUBLISH
SUBSCRIBE
10C
10E
10E

FIG.10D

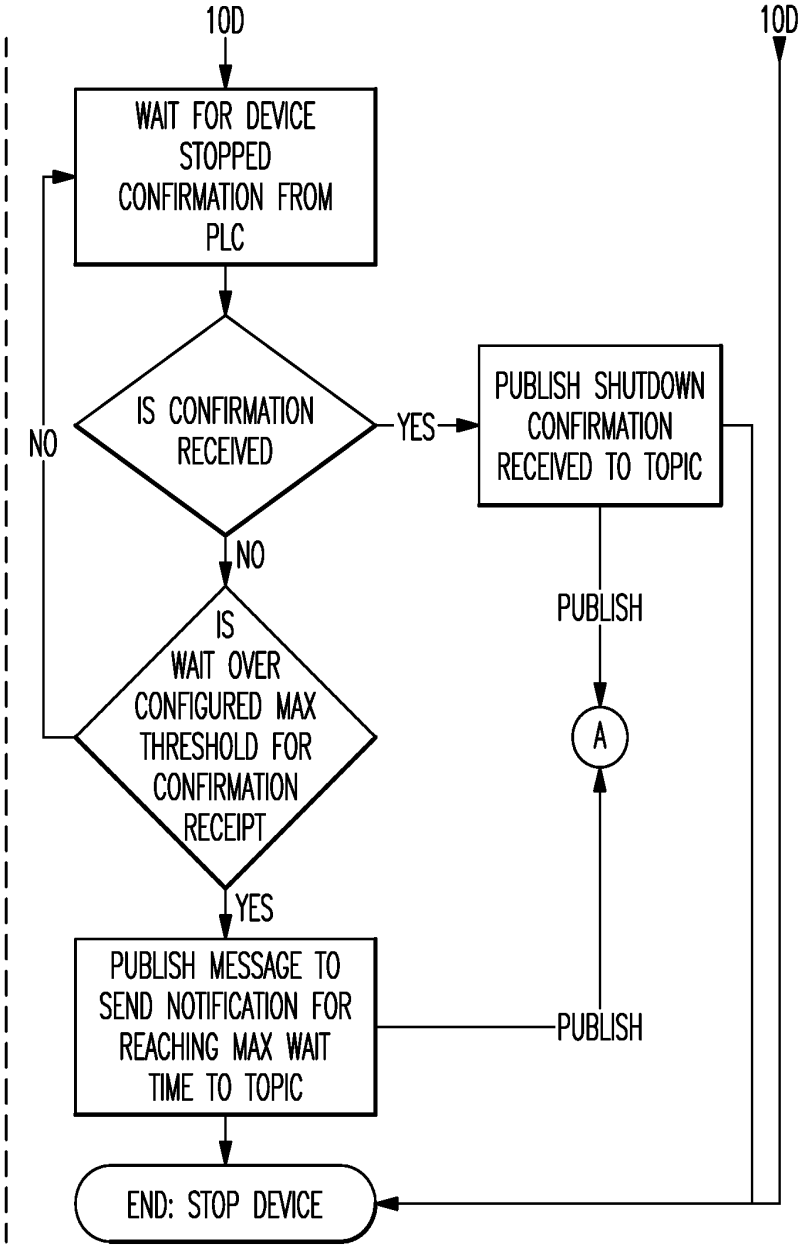
10D
10D
WAIT FOR DEVICE STOPPED CONFIRMATION FROM PLC
IS CONFIRMATION RECEIVED
YES
NO
PUBLISH SHUTDOWN CONFIRMATION RECEIVED TO TOPIC
NO
PUBLISH
IS WAIT OVER CONFIGURED MAX THRESHOLD FOR CONFIRMATION RECEIPT
A
YES
PUBLISH MESSAGE TO SEND NOTIFICATION FOR REACHING MAX WAIT TIME TO TOPIC
PUBLISH
END: STOP DEVICE

FIG.10E

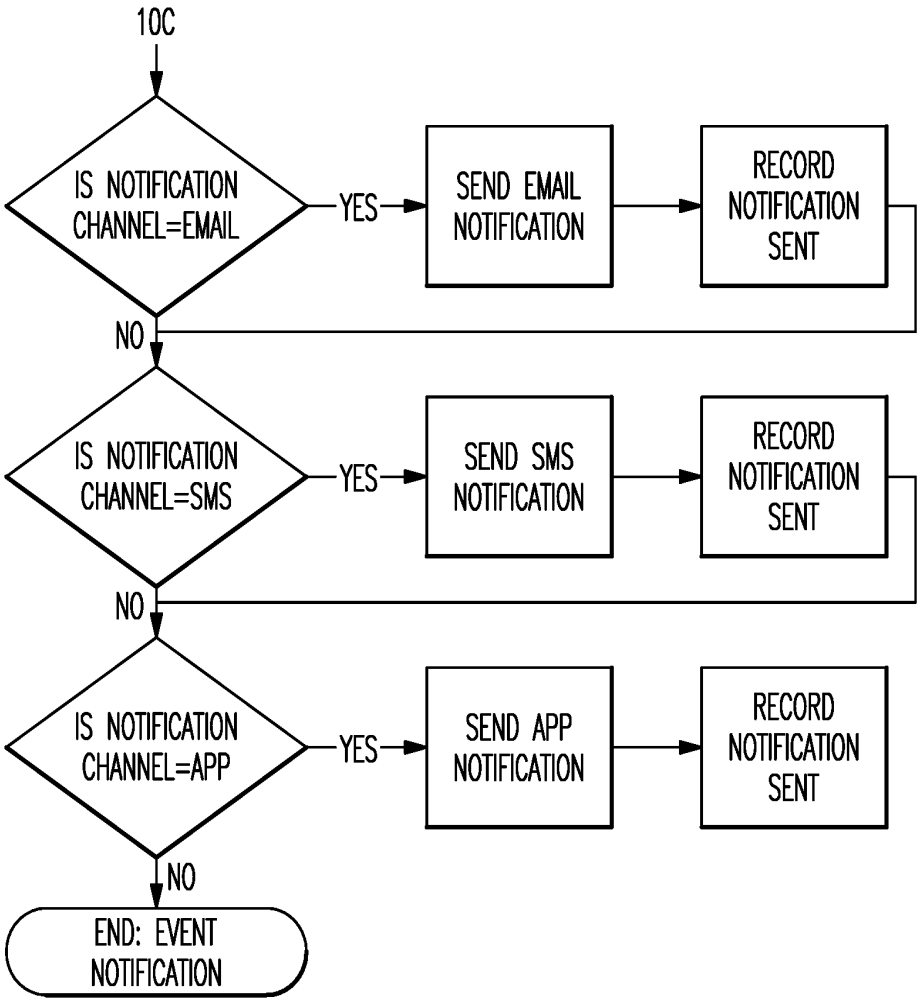
10C
IS NOTIFICATION CHANNEL=EMAIL
YES
SEND EMAIL NOTIFICATION
RECORD NOTIFICATION SENT
NO
IS NOTIFICATION CHANNEL=SMS
YES
SEND SMS NOTIFICATION
RECORD NOTIFICATION SENT
NO
IS NOTIFICATION CHANNEL=APP
YES
SEND APP NOTIFICATION
RECORD NOTIFICATION SENT
NO
END: EVENT NOTIFICATION

FIG.10F

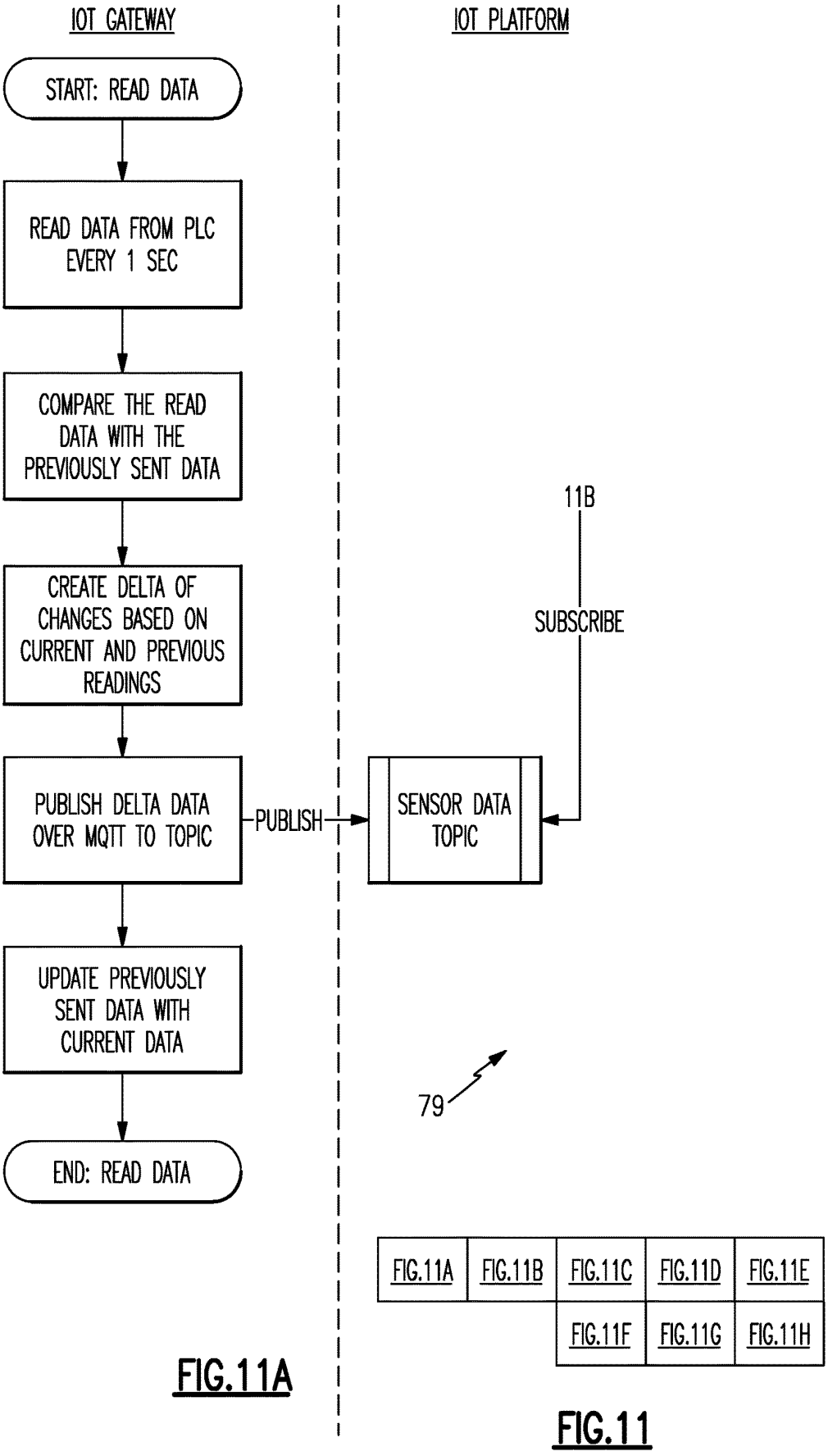

FIG.11A

FIG.11

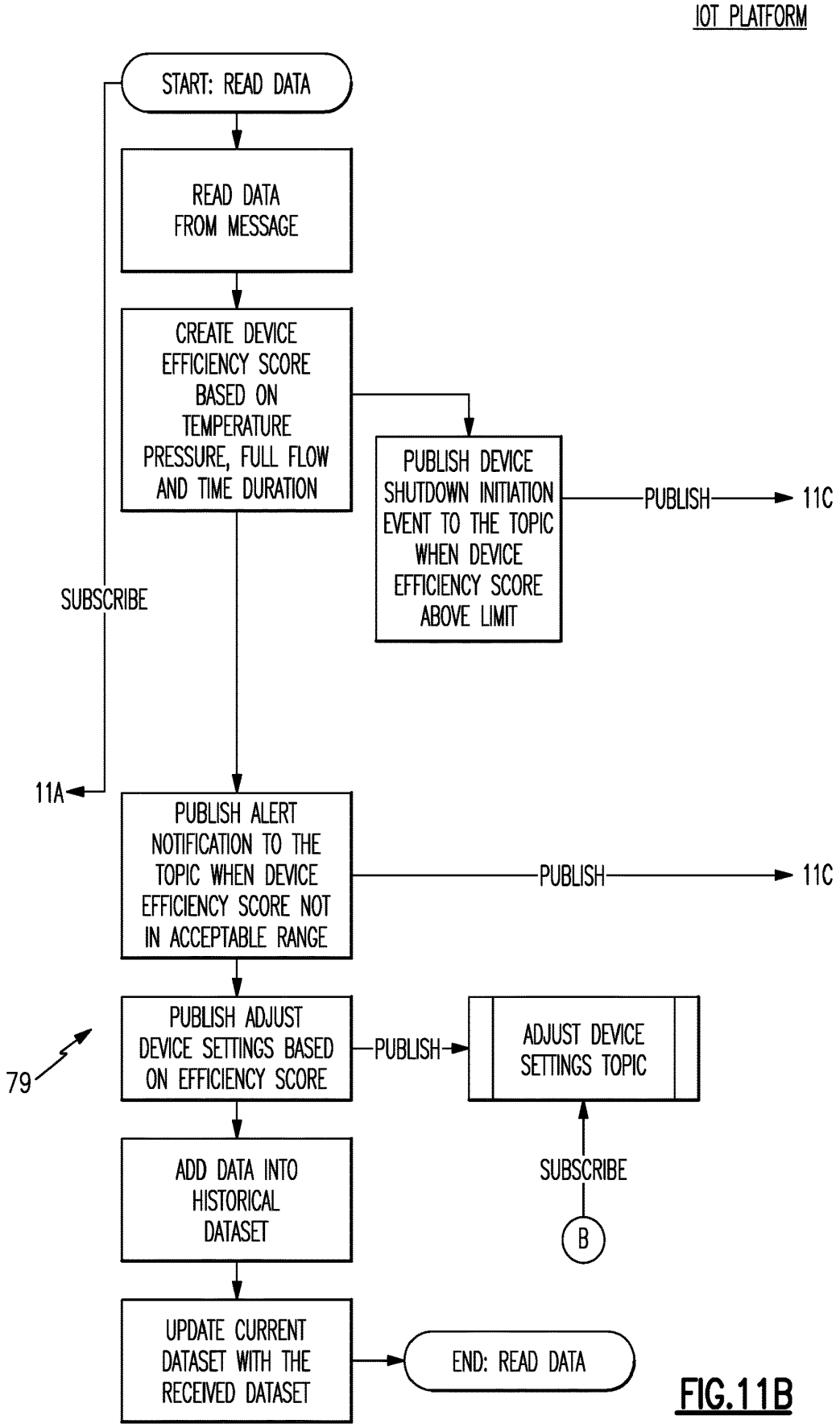
IOT PLATFORM
START: READ DATA
READ DATA FROM MESSAGE
CREATE DEVICE EFFICIENCY SCORE BASED ON TEMPERATURE PRESSURE, FULL FLOW AND TIME DURATION
PUBLISH DEVICE SHUTDOWN INITIATION EVENT TO THE TOPIC WHEN DEVICE EFFICIENCY SCORE ABOVE LIMIT
PUBLISH
11C
SUBSCRIBE
11A
PUBLISH ALERT NOTIFICATION TO THE TOPIC WHEN DEVICE EFFICIENCY SCORE NOT IN ACCEPTABLE RANGE
PUBLISH
11C
79
PUBLISH ADJUST DEVICE SETTINGS BASED ON EFFICIENCY SCORE
PUBLISH
ADJUST DEVICE SETTINGS TOPIC
SUBSCRIBE
B
ADD DATA INTO HISTORICAL DATASET
UPDATE CURRENT DATASET WITH THE RECEIVED DATASET
END: READ DATA

FIG.11B

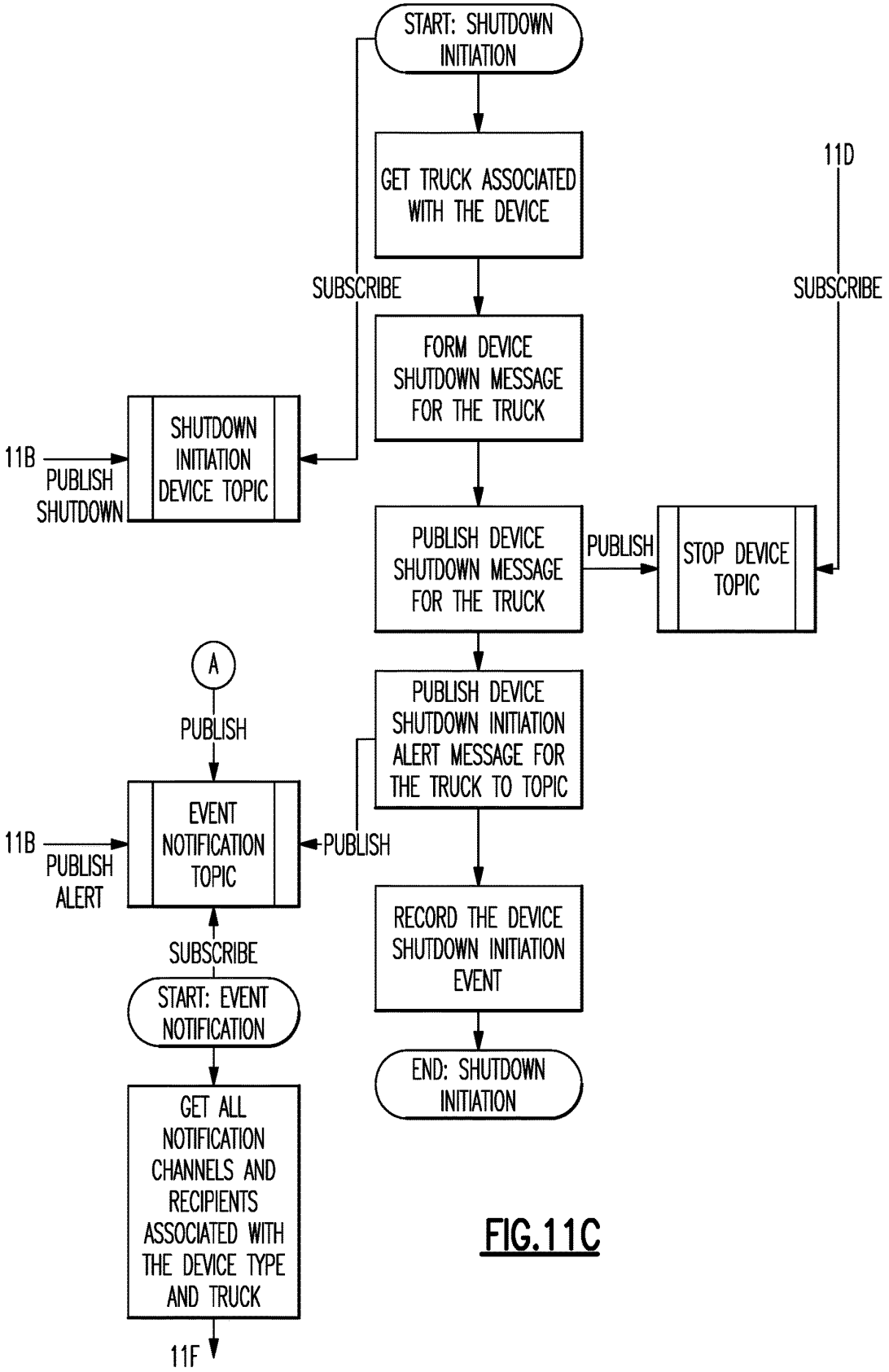
START: SHUTDOWN INITIATION
GET TRUCK ASSOCIATED WITH THE DEVICE
11D
SUBSCRIBE
SUBSCRIBE
FORM DEVICE SHUTDOWN MESSAGE FOR THE TRUCK
11B
PUBLISH SHUTDOWN
SHUTDOWN INITIATION DEVICE TOPIC
PUBLISH DEVICE SHUTDOWN MESSAGE FOR THE TRUCK
PUBLISH
STOP DEVICE TOPIC
A
PUBLISH
PUBLISH DEVICE SHUTDOWN INITIATION ALERT MESSAGE FOR THE TRUCK TO TOPIC
11B
PUBLISH ALERT
EVENT NOTIFICATION TOPIC
PUBLISH
RECORD THE DEVICE SHUTDOWN INITIATION EVENT
SUBSCRIBE
START: EVENT NOTIFICATION
END: SHUTDOWN INITIATION
GET ALL NOTIFICATION CHANNELS AND RECIPIENTS ASSOCIATED WITH THE DEVICE TYPE AND TRUCK
11F

FIG.11C

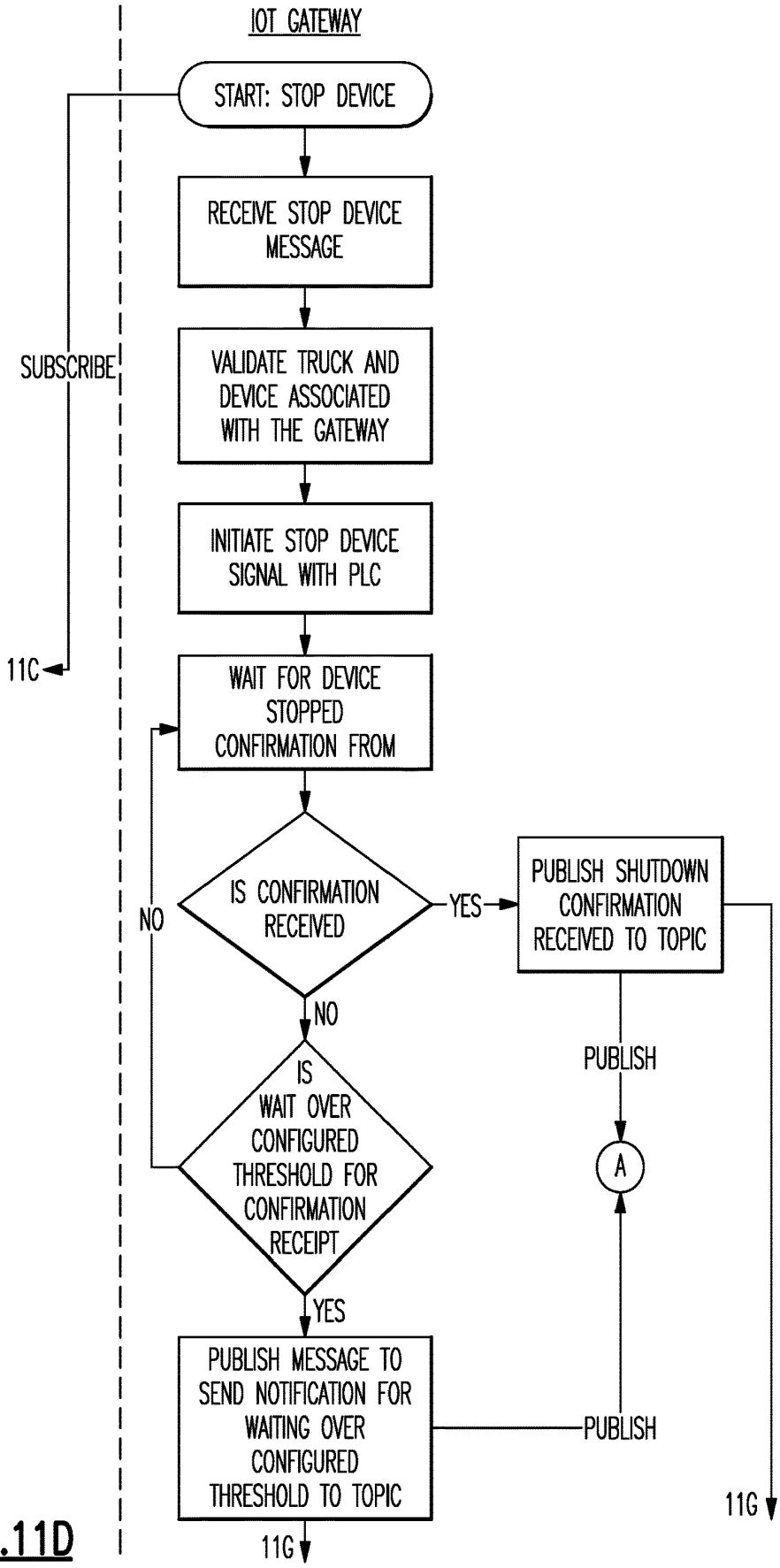
IOT GATEWAY
START: STOP DEVICE
RECEIVE STOP DEVICE MESSAGE
VALIDATE TRUCK AND DEVICE ASSOCIATED WITH THE GATEWAY
INITIATE STOP DEVICE SIGNAL WITH PLC
WAIT FOR DEVICE STOPPED CONFIRMATION FROM
IS CONFIRMATION RECEIVED
YES
NO
PUBLISH SHUTDOWN CONFIRMATION RECEIVED TO TOPIC
PUBLISH
A
IS WAIT OVER CONFIGURED THRESHOLD FOR CONFIRMATION RECEIPT
NO
YES
PUBLISH MESSAGE TO SEND NOTIFICATION FOR WAITING OVER CONFIGURED THRESHOLD TO TOPIC
PUBLISH
SUBSCRIBE
11C
11G
11G

FIG.11D

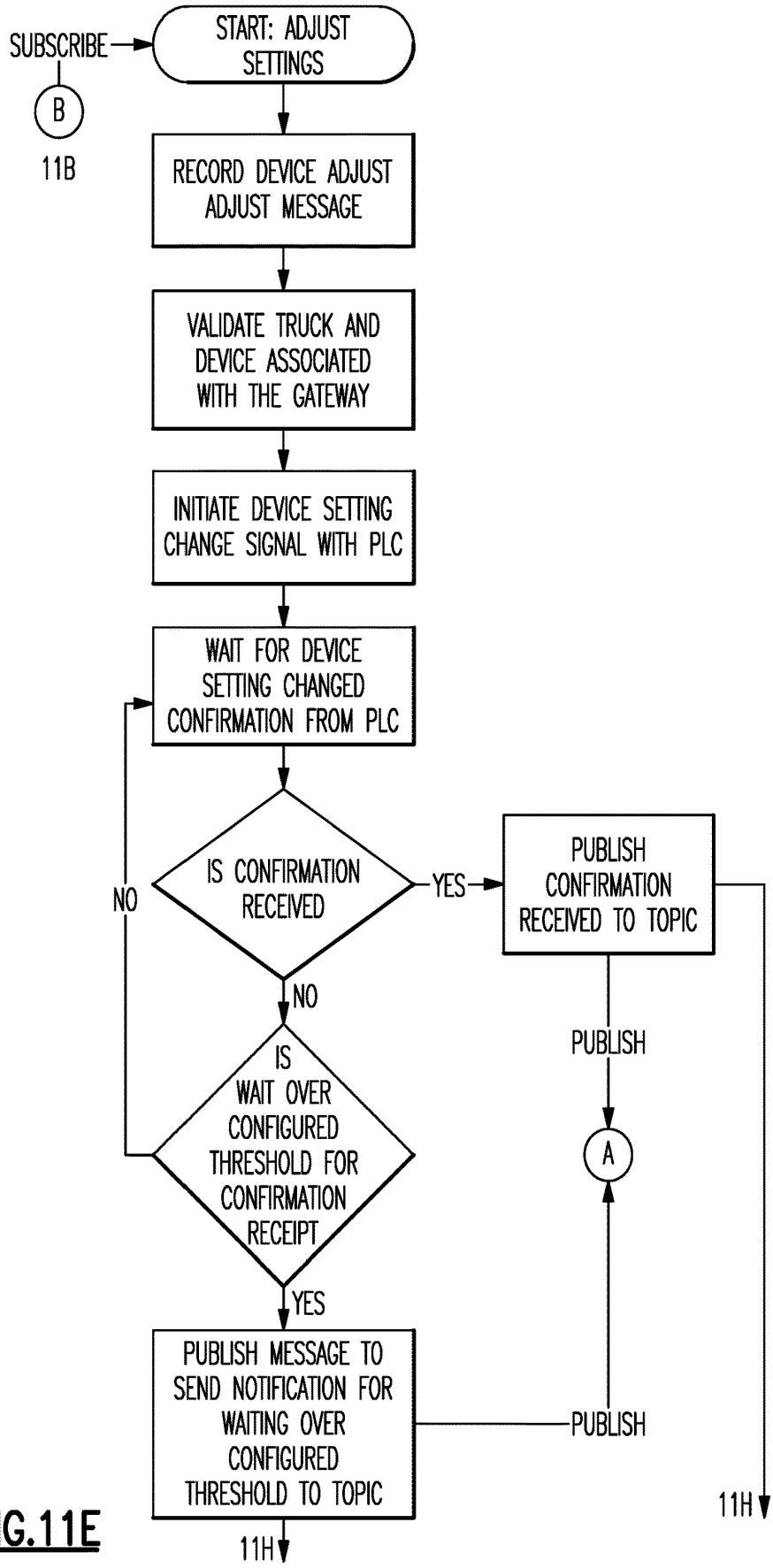
SUBSCRIBE
B
11B
START: ADJUST SETTINGS
RECORD DEVICE ADJUST ADJUST MESSAGE
VALIDATE TRUCK AND DEVICE ASSOCIATED WITH THE GATEWAY
INITIATE DEVICE SETTING CHANGE SIGNAL WITH PLC
WAIT FOR DEVICE SETTING CHANGED CONFIRMATION FROM PLC
IS CONFIRMATION RECEIVED
YES
PUBLISH CONFIRMATION RECEIVED TO TOPIC
NO
NO
IS WAIT OVER CONFIGURED THRESHOLD FOR CONFIRMATION RECEIPT
PUBLISH
A
YES
PUBLISH MESSAGE TO SEND NOTIFICATION FOR WAITING OVER CONFIGURED THRESHOLD TO TOPIC
PUBLISH
11H
11H

FIG.11E

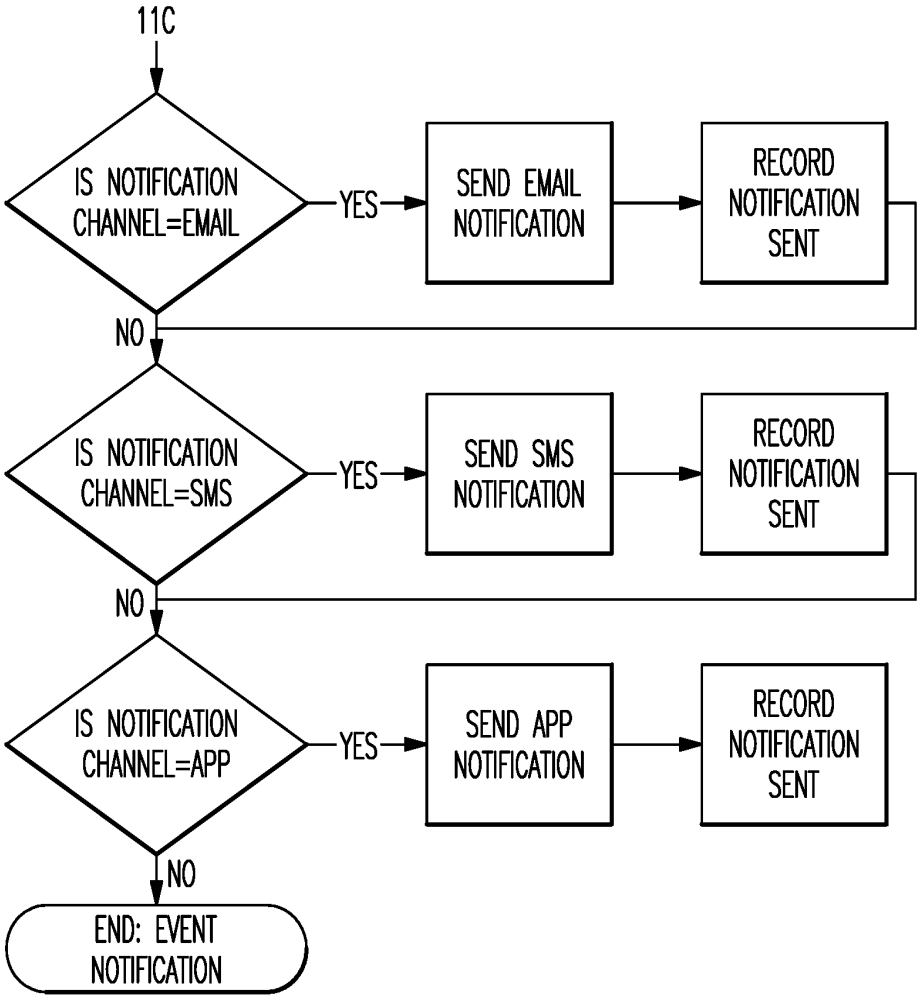
11C
IS NOTIFICATION CHANNEL=EMAIL
YES
SEND EMAIL NOTIFICATION
RECORD NOTIFICATION SENT
NO
IS NOTIFICATION CHANNEL=SMS
YES
SEND SMS NOTIFICATION
RECORD NOTIFICATION SENT
NO
IS NOTIFICATION CHANNEL=APP
YES
SEND APP NOTIFICATION
RECORD NOTIFICATION SENT
NO
END: EVENT NOTIFICATION

FIG.11F

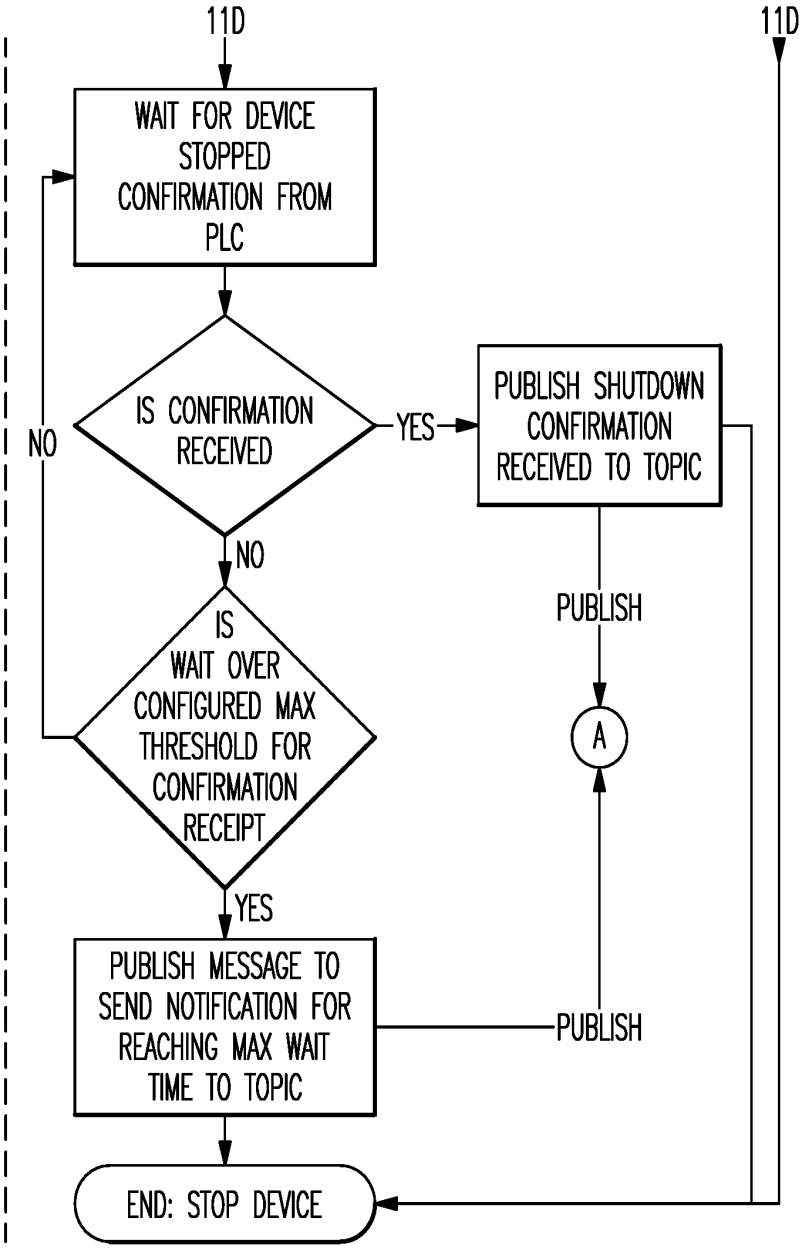
11D
11D
WAIT FOR DEVICE STOPPED CONFIRMATION FROM PLC
IS CONFIRMATION RECEIVED
YES
PUBLISH SHUTDOWN CONFIRMATION RECEIVED TO TOPIC
NO
NO
IS WAIT OVER CONFIGURED MAX THRESHOLD FOR CONFIRMATION RECEIPT
PUBLISH
A
YES
PUBLISH MESSAGE TO SEND NOTIFICATION FOR REACHING MAX WAIT TIME TO TOPIC
PUBLISH
END: STOP DEVICE

FIG.11G

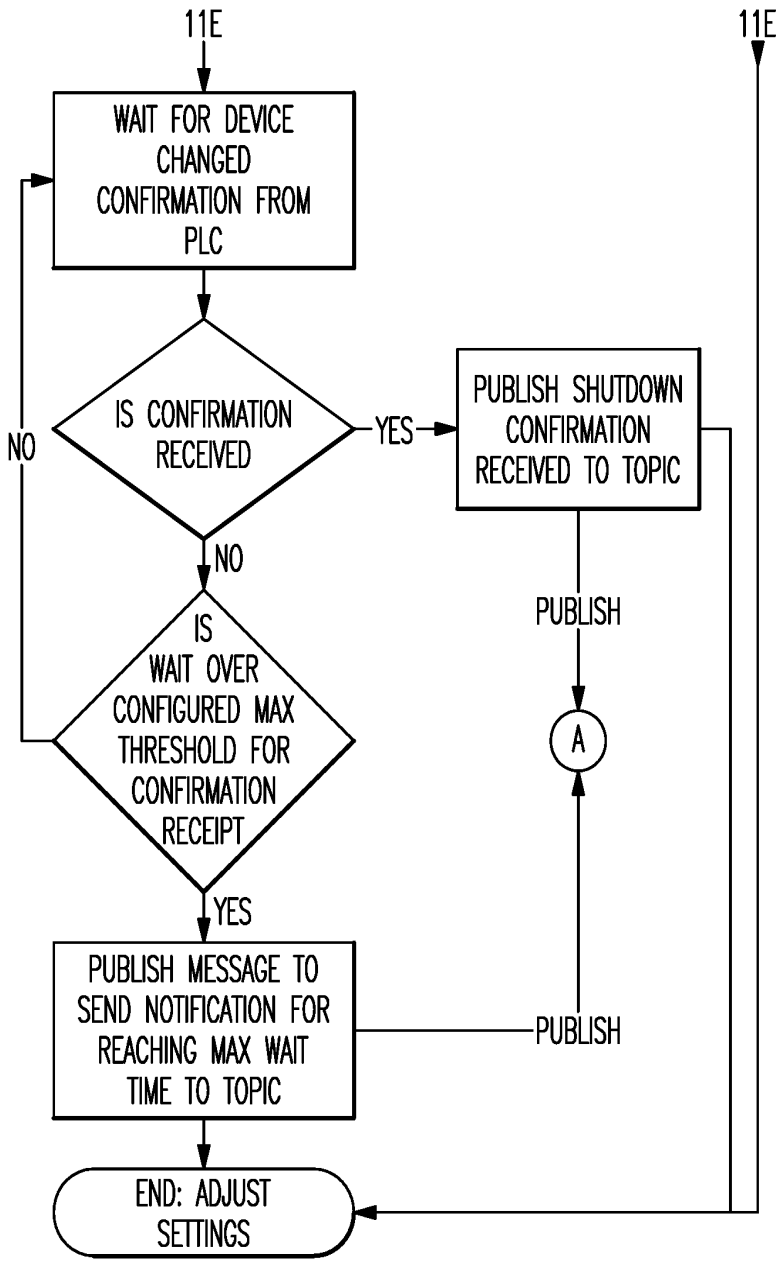
11E
11E
WAIT FOR DEVICE CHANGED CONFIRMATION FROM PLC
IS CONFIRMATION RECEIVED
YES
NO
PUBLISH SHUTDOWN CONFIRMATION RECEIVED TO TOPIC
NO
IS WAIT OVER CONFIGURED MAX THRESHOLD FOR CONFIRMATION RECEIPT
PUBLISH
A
YES
PUBLISH MESSAGE TO SEND NOTIFICATION FOR REACHING MAX WAIT TIME TO TOPIC
PUBLISH
END: ADJUST SETTINGS

FIG.11H

MOBILE DISTRIBUTION STATION WITH FAIL-SAFES

CROSS-REFERENCE TO RELATED APPLICATION

The present disclosure is a continuation of U.S. patent application Ser. No. 15/290,400 filed Oct. 11, 2016.

BACKGROUND

Hydraulic fracturing (also known as fracking) is a well-stimulation process that utilizes pressurized liquids to fracture rock formations. Pumps and other equipment used for hydraulic fracturing typically operate at the surface of the well site. The equipment may operate semi-continuously, until refueling is needed, at which time the equipment may be shut-down for refueling. Shut-downs are costly and reduce efficiency. More preferably, to avoid shut-downs fuel is replenished in a hot-refueling operation while the equipment continues to run. This permits fracking operations to proceed fully continuously; however, hot-refueling can be difficult to reliably sustain for the duration of the fracking operation.

SUMMARY

A fuel distribution station according to an example of the present disclosure includes a mobile trailer, a pump on the mobile trailer, a manifold on the mobile trailer connected with the pump, a plurality of hoses in fluid communication with the manifold, and a plurality of valves on the mobile trailer. Each of the valves is situated between the manifold and a respective different one of the hoses. Fluid level sensors are associated with respective different ones of the hoses, and the fluid level sensors are operable to detect respective different fluid levels. A controller is configured to operate the valves responsive to signals from the fluid level sensors, activate and deactivate the pump, and identify whether there is a risk condition based upon at least one variable operating parameter and deactivate the pump responsive to the risk condition.

In a further embodiment of any of the foregoing embodiments, the variable operating parameter includes fluid pressure, and the controller identifies whether there is the risk condition based upon the fluid pressure exceeding a preset fluid pressure threshold.

In a further embodiment of any of the foregoing embodiments, the variable operating parameter includes fluid pressure, and the controller identifies whether there is the risk condition based upon change of the fluid pressure within a preset time period.

In a further embodiment of any of the foregoing embodiments, the variable operating parameter includes one of the fluid levels, and the controller identifies whether there is the risk condition based upon a change in the one of the fluid levels.

In a further embodiment of any of the foregoing embodiments, the variable operating parameter includes fluid temperature, and the controller identifies whether there is the risk condition based upon the fluid temperature exceeding a preset fluid temperature threshold.

In a further embodiment of any of the foregoing embodiments, the fluid temperature is taken at a point between the pump and the manifold.

In a further embodiment of any of the foregoing embodiments, the fluid temperature is taken at a point proximate the pump.

In a further embodiment of any of the foregoing embodiments, the controller is configured to limit the number of valves that are open based upon a minimum threshold fluid pressure.

In a further embodiment of any of the foregoing embodiments, the controller is configured to delay an opening of one of the valves until closing of another one of the valves.

A further embodiment of any of the foregoing embodiments includes an electronic register on the mobile trailer and connected with the pump.

A further embodiment of any of the foregoing embodiments includes an air eliminator between the pump and the electronic register.

A method for a distribution station according to an example of the present disclosure includes selectively opening the valves responsive to signals from the fluid level sensors. In correspondence with opening the valves, the method includes activating the pump to convey a fluid through any open ones of the valves and identifying whether there is a risk condition based upon at least one variable operating parameter. The pump is deactivated responsive to the risk condition.

In a further embodiment of any of the foregoing embodiments, the variable operating parameter includes fluid pressure, and identifying whether there is the risk condition based upon the fluid pressure exceeding a preset fluid pressure threshold.

In a further embodiment of any of the foregoing embodiments, the variable operating parameter includes fluid pressure, and identifying whether there is the risk condition based upon change of the fluid pressure within a preset time period.

In a further embodiment of any of the foregoing embodiments, the variable operating parameter includes one of the fluid levels, and identifying whether there is the risk condition based upon a change in the one of the fluid levels.

In a further embodiment of any of the foregoing embodiments, the variable operating parameter includes fluid temperature, and identifying whether there is the risk condition based upon the fluid temperature exceeding a preset fluid temperature threshold.

A further embodiment of any of the foregoing embodiments includes taking the fluid temperature at a point between the pump and the manifold.

A further embodiment of any of the foregoing embodiments includes taking the fluid temperature at a point proximate the pump.

A further embodiment of any of the foregoing embodiments includes limiting the number of valves that are open based upon a minimum threshold fluid pressure by delaying the opening of one of the valves until closing of another one of the valves.

BRIEF DESCRIPTION OF THE DRAWINGS

The various features and advantages of the present disclosure will become apparent to those skilled in the art from the following detailed description. The drawings that accompany the detailed description can be briefly described as follows.

FIG. **1** illustrates an example mobile fuel distribution station.

FIG. **2** illustrates an internal layout of a mobile fuel distribution station.

FIG. **3** illustrates an isolated view of hose reels on a support rack used in a mobile fuel distribution station.

FIG. **4** illustrates an example of a connection between a manifold, a control valve, and a reel.

FIG. **5** illustrates a sectioned view of an example hose for a mobile fuel distribution station.

FIG. **6** illustrates an example of an integrated fuel cap sensor for a mobile fuel distribution station.

FIG. **7** illustrates an example of the routing of a sensor communication line through a reel in a mobile fuel distribution station.

FIG. **8** illustrates another example mobile fuel distribution station that is capable of delivering and tracking two different types of fluids.

FIG. **9** illustrates a system that can be used to remotely monitor and manage one or more mobile distribution stations.

FIG. **10** is a workflow logic diagram that represents an example of a method for managing one or more mobile distribution stations. The size of the diagram exceeds what can be shown on a page. Therefore, FIG. **10** is divided into sub-sections, indicated as FIG. **10**A, FIG. **10**B, FIG. **10**C, FIG. **10**D, FIG. **10**E, and FIG. **10**F. The sub-sections show the details of the workflow logic diagram and, where appropriate, linking arrows to adjacent sub-sections. The relative location of the sub-sections to each other is also shown.

FIG. **11** is another workflow logic diagram that represents an example of a method for managing one or more mobile distribution stations. The size of the diagram exceeds what can be shown on a page. Therefore, FIG. **11** is divided into sub-sections, indicated as FIG. **11**A, FIG. **11**B, FIG. **11**C, FIG. **11**D, FIG. **11**E, FIG. **11**F, FIG. **11**G, and FIG. **11**H. The sub-sections show the details of the workflow logic diagram and, where appropriate, linking arrows to adjacent sub-sections. The relative location of the sub-sections to each other is also shown.

DETAILED DESCRIPTION

FIG. **1** illustrates a mobile distribution station **20** and FIG. **2** illustrates an internal layout of the station **20**. As will be described, the station **20** may serve in a "hot-refueling" capacity to distribute fuel to multiple pieces of equipment while the equipment is running, such as fracking equipment at a well site. As will be appreciated, the station **20** is not limited to applications for fracking or for delivering fuel. The examples herein may be presented with respect to fuel delivery, but the station **20** may be used in mobile delivery of other fluids, in other gas/petroleum recovery operations, or in other operations where mobile refueling or fluid delivery will be of benefit.

In this example, the station **20** includes a mobile trailer **22**. Generally, the mobile trailer **22** is elongated and has first and second opposed trailer side walls W**1** and W**2** that join first and second opposed trailer end walls E**1** and E**2**. Most typically, the trailer **22** will also have a closed top (not shown). The mobile trailer **22** may have wheels that permit the mobile trailer **22** to be moved by a vehicle from site to site to service different hot-refueling operations. In this example, the mobile trailer **22** has two compartments. A first compartment **24** includes the physical components for distributing fuel, such as diesel fuel, and a second compartment **26** serves as an isolated control room for managing and monitoring fuel distribution. The compartments **24**/**26** are separated by an inside wall **28***a* that has an inside door **28***b*.

The first compartment **24** includes one or more pumps **30**. Fuel may be provided to the one or more pumps **30** from an external fuel source, such as a tanker truck on the site. On the trailer **22**, the one or more pumps **30** are fluidly connected via a fuel line **32** with a high precision register **34** for metering fuel. The fuel line **32** may include, but is not limited to, hard piping. In this example, the fuel line **32** includes a filtration and air eliminator system **36***a* and one or more sensors **36***b*. Although optional, the system **36***a* is beneficial in many implementations, to remove foreign particles and air from the fuel prior to delivery to the equipment. The one or more sensors **36***b* may include a temperature sensor, a pressure sensor, or a combination thereof, which assist in fuel distribution management.

The fuel line **32** is connected with one or more manifolds **38**. In the illustrated example, the station **20** includes two manifolds **38** that arranged on opposed sides of the compartment **24**. As an example, the manifolds **38** are elongated tubes that are generally larger in diameter than the fuel line **32** and that have at least one inlet and multiple outlets. Each hose **40** is wound, at least initially, on a reel **42** that is rotatable to extend or retract the hose **40** externally through one or more windows of the trailer **22**. Each reel **42** may have an associated motor to mechanically extend and retract the hose **40**.

As shown in an isolated view in FIG. **3**, the reels **42** are mounted on a support rack **42***a*. In this example, the support rack **42***a* is configured with upper and lower rows of reels **42**. Each row has five reels **42** such that each support rack **42***a* provides ten reels **42** and thus ten hoses **40**. There are two support racks **42***a* (FIG. **2**) arranged on opposed sides of the first compartment **24**, with an aisle (A) that runs between the support racks **42***a* from an outside door E to the inside door **28***b*. The station **20** therefore provides twenty hoses **40** in the illustrated arrangement, with ten hoses **40** provided on each side of the station **20**. As will be appreciated, fewer or additional reels and hoses may be used in alternative examples.

As shown in a representative example in FIG. **4**, each hose **40** is connected to a respective one of the reels **42** and a respective one of a plurality of control valves **44**. For example, a secondary fuel line **46** leads from the manifold **38** to the reel **42**. The control valve **44** is in the secondary fuel line **46**. The control valve **44** is moveable between open and closed positions to selectively permit fuel flow from the manifold **38** to the reel **42** and the hose **40**. For example, the control valve **44** is a powered valve, such as a solenoid valve.

In the illustrated example, the first compartment **24** also includes a sensor support rack **48**. The sensor support rack **48** holds integrated fuel cap sensors **50** (when not in use), or at least portions thereof. When in use, each integrated fuel cap sensor **50** is temporarily affixed to a piece of equipment (i.e., the fuel tank of the equipment) that is subject to the hot-refueling operation. Each hose **40** may include a connector end **40***a* and each integrated fuel cap sensor **50** may have a corresponding mating connector to facilitate rapid connection and disconnection of the hose **40** with the integrated fuel cap sensor **50**. For example, the connector end **40***a* and mating connector on the integrated fuel cap sensor **50** form a hydraulic quick-connect.

At least the control valves **44**, pump or pumps **30**, sensor or sensors **36***b*, and register **34** are in communication with a controller **52** located in the second compartment **26**. As an example, the controller **52** includes software, hardware, or both that is configured to carry out any of the functions described herein. In one further example, the controller **52** includes a programmable logic controller with a touch-screen for user input and display of status data. For example,

the screen may simultaneously show multiple fluid levels of the equipment that is being serviced.

When in operation, the integrated fuel cap sensors **50** are mounted on respective fuel tanks of the pieces of equipment that are subject to the hot-refueling operation. The hoses **40** are connected to the respective integrated fuel cap sensors **50**. Each integrated fuel cap sensor **50** generates signals that are indicative of the fuel level in the fuel tank of the piece of equipment on which the integrated fuel cap sensor **50** is mounted. The signals are communicated to the controller **52**.

The controller **52** interprets the signals and determines the fuel level for each fuel tank of each piece of equipment. In response to a fuel level that falls below a lower threshold, the controller **52** opens the control valve **44** associated with the hose **40** to that fuel tank and activates the pump or pumps **30**. The pump or pumps **30** provide fuel flow into the manifolds **38** and through the open control valve **44** and reel **42** such that fuel is provided through the respective hose **40** and integrated fuel cap sensor **50** into the fuel tank. The lower threshold may correspond to an empty fuel level of the fuel tank, but more typically the lower threshold will be a level above the empty level to reduce the potential that the equipment completely runs out of fuel and shuts down.

The controller **52** also determines when the fuel level in the fuel tank reaches an upper threshold. The upper threshold may correspond to a full fuel level of the fuel tank, but more typically the upper threshold will be a level below the full level to reduce the potential for overflow. In response to reaching the upper threshold, the controller **52** closes the respective control valve **44** and ceases the pump or pumps **30**. If other control valves **44** are open or are to be opened, the pump or pumps **30** may remain on. The controller **52** can also be programmed with an electronic stop failsafe measure to prevent over-filling. As an example, once an upper threshold is reached on a first tank and the control valve **44** is closed, but the pump **30** is otherwise to remain on to fill other tanks, if the fuel level continues to rise in the first tank, the controller **52** shuts the pump **30** off.

Multiple control valves **44** may be open at one time, to provide fuel to multiple pieces of equipment at one time. If there is demand for fuel from two or more fuel tanks, the controller **52** may manage which of the valves **44** open and when they open. For instance, the controller **52** is configured to limit the number of valves **44** that are open at one time based upon a minimum threshold fluid pressure. In one example, the controller **52** limits the number of valves **44** that are open at one time to four in order to ensure that there is adequate fuel pressure in the system to fill the equipment in a short time. In contrast, if a high number of valves were open at once, the fuel pressure may fall to a low level such that it takes a longer time to fill the fuel tanks of the equipment. The controller **52** may perform the functions above while in an automated operating mode. Additionally, the controller **52** may have a manual mode in which a user can control at least some functions through the PLC, such as starting and stopped the pump **30** and opening and closing control valves **44**. For example, manual mode may be used at the beginning of a job when initially filling tanks to levels at which the fuel cap sensors **50** can detect fuel and/or during a job if a fuel cap sensor **50** becomes inoperable. Of course, operating in manual mode may deactivate some automated functions, such as filling at the low threshold or stopping at the high threshold.

In one example, the controller **52** sequentially opens the control valves **44** using a delay. In this example the limit of the number of valves **44** that can be open at one time is four. If five fuel tanks require filling, rather than having the five corresponding valves **44** all open at once, the controller **52** opens four of the valves **44** and delays opening the fifth of the valves **44**. Upon completion of filling of one of the fuel tanks, the controller **52** closes the corresponding valve **44** and opens the fifth valve **44**. Thus, the delay involves a demand for fuel that would result in the opening of the valve **44** but that is instead displaced in time until a condition is met. In the example above, the condition is that the number of open valves **44** must be less than four before opening the fifth valve **44**.

In addition to the use of the sensor signals to determine fuel level, or even as an alternative to use of the sensor signals, the refueling may be time-based. For instance, the fuel consumption of a given piece of equipment may be known such that the fuel tank reaches the lower threshold at known time intervals. The controller **52** is operable to refuel the fuel tank at the time intervals rather than on the basis of the sensor signals, although sensor signals may also be used to verify fuel level.

The controller **52** also tracks the amount of fuel provided to the fuel tanks. For instance, the register **34** precisely measures the amount of fuel provided from the pump or pumps **30**. As an example, the register **34** is an electronic register and has a resolution of about 0.1 gallons. The register **34** communicates measurement data to the controller **52**. The controller **52** can thus determine the total amount of fuel used to very precise levels. The controller **52** may also be configured to provide outputs of the total amount of fuel consumed. For instance, a user may program the controller **52** to provide outputs at desired intervals, such as by worker shifts or daily, weekly, or monthly periods. The outputs may also be used to generate invoices for the amount of fuel used. As an example, the controller **52** may provide a daily output of fuel use and trigger the generation of an invoice that corresponds to the daily fuel use, thereby enabling almost instantaneous invoicing.

The controller **52** is also configured with one or more fail-safes. A-safe ensures that the station **20** shuts down in response to an undesired circumstance or threat of an undesired circumstance, i.e. a risk condition. In this regard, during regular operation when there is no risk condition, the controller **52** selectively activates and deactivates the pump, and selectively opens and closes the valves **44** to provide fuel. The controller **52** identifies whether there is a risk condition based upon at least one variable operating parameter. An operating parameter may originate from the sensor or sensors **36*b***, fuel cap sensors **50**, or other particular locations in the system. Thus, a sensor may be implemented at a particular point of interest and connected for communication with the controller **52**, such as by a transmitter or wired connection. Moreover, one or more sensor may be incorporated into the fuel cap sensors **50** to provide diagnostics at a fuel tank, such as tank temperature, pressure, etc. As will be discussed below, the operating parameters may relate to pressure, temperature, fluid level or other parameter indicative of an undesired circumstance. If the controller **52** identifies the risk condition, the controller **52** deactivates the pump **30** responsive to the risk condition and closes any valves **44** that are open. The deactivation of the pump **30** stops or slows the flow of fluid. For instance, a fluid leak may cause a divergence in an operating parameter and trigger the controller **52** to deactivate the pump **30**, thereby slowing or stopping flow of leaking fuel.

In one further example, the variable operating parameter includes fluid pressure. For instance, the sensor or sensors **36*b*** may include pressure sensors that provide fluid pressure feedback to the controller **52**. The controller **52** identifies

whether the risk condition is present based upon comparison of the fluid pressure to a preset fluid pressure threshold. If the fluid pressure exceeds the threshold, the controller **52** determines that the risk condition is present and deactivates the pump **30**. As an example, if one of the valves **44** was supposed to open but did not open, there may be a pressure build-up to a level in excess of the threshold.

In a further example, the risk condition is additionally or alternatively based upon a change of the fluid pressure within a preset time period. If an expected change in pressure does not occur within the time period, the controller **52** determines that the risk condition is present and deactivates the pump **30**. For instance, within a preset time period of the pump **30** being activated or one of the valves **44** being opened, if there is a decrease in pressure, the controller **52** determines that the risk condition is present and deactivates the pump **30**. The decrease may need to exceed a preset threshold decrease for the controller **52** to determine that the risk condition is present.

In one further example, the variable operating parameter additionally or alternatively includes the fluid levels. If one or more of the valves **44** are opened to begin filling the corresponding tanks, the levels in those tanks are expected to change. However, if there is no change or substantially no change in a level within a preset time period, which is otherwise expected to increase, the controller **52** determines that the risk condition is present and deactivates the pump **30**. Thus, if a hose **40** were to rupture, spillage of fuel is limited to the volume of fuel in the hose **40**. For instance, the preset time period may be three seconds, six seconds, ten seconds, or fifteen seconds, which may limit spillage to approximately fifteen gallons for a given size of hose.

In one further example, the variable operating parameter additionally or alternatively includes fluid temperature. For instance, the sensor or sensors **36***b* may include a temperature sensor that provides fluid temperature feedback to the controller **52**. The controller **52** identifies whether the risk condition is present based upon comparison of the fluid temperature to a preset fluid temperature threshold. If the fluid temperature exceeds the threshold, the controller **52** determines that the risk condition is present and deactivates the pump **30** and closes any valves **44** that are open. As an example, if the pump **30** overheats, the fluid may heat to a temperature above the threshold. In this regard, the temperature can be taken from a location proximate the pump **30**, such as at a point between the pump **30** and the manifold **38**.

The controller **52** may also represent a method for use with the station **20**. For example, the method may include selectively opening the valves **44** responsive to signals from the integrated fuel cap sensors **50** and, in correspondence with opening the valves **44**, activating the pump **30** to convey a fluid through any open ones of the valves **44**. The method then involves identifying whether there is a risk condition based upon at least one variable operating parameter and deactivating the pump **30** responsive to the risk condition.

In a further example, the integrated fuel cap sensors **50** are each hard-wired to the controller **52**. The term "hard-wired" or variations thereof refers to a wired connection between two components that serves for electronic communication there between, which here a sensor and a controller. The hard-wiring may facilitate providing more reliable signals from the integrated fuel cap sensors **50**. For instance, the many pieces of equipment, vehicles, workers, etc. at a site may communicate using wireless devices. The wireless signals may interfere with each other and, therefore, degrade communication reliability. Hard-wiring the integrated fuel cap sensors **50** to the controller **52** facilitates reduction in interference and thus enhances reliability.

In general, hard-wiring in a hot-refueling environment presents several challenges. For example, a site has many workers walking about and typically is located on rough terrain. Thus, as will be described below, each integrated fuel cap sensor **50** is hard-wired through the associated hose **40** to the controller **52**.

FIG. **5** illustrates a representative portion of one of the hoses **40** and, specifically, the end of the hose **40** that will be located at the fuel tank of the equipment being refueled. In this example, the hose **40** includes a connector **60** at the end for detachably connecting the hose **40** to the integrated fuel cap sensors **50**. The hose **40** is formed of a tube **62** and a sleeve **64** that circumscribes the tube **62**. As an example, the tube **62** may be a flexible elastomeric tube and the sleeve **64** may be a flexible fabric sleeve. The sleeve **64** is generally loosely arranged around the tube **62**, although the sleeve **64** may closely fit on the tube **62** to prevent substantial slipping of the sleeve **64** relative to the tube **62** during use and handling. Optionally, to further prevent slipping and/or to secure the sleeve **64**, bands may be tightened around the hose **40**. As an example, one or more steel or stainless steel bands can be provided at least near the ends of the hose **40**.

A plurality of sensor communication lines **66** (one shown) are routed with or in the respective hoses **40**. For instance, each line **66** may include a wire, a wire bundle, and/or multiple wires or wire bundles. In one further example, the line **66** is a low milli-amp intrinsic safety wiring, which serves as a protection feature for reducing the concern for operating electrical equipment in the presence of fuel by limiting the amount of thermal and electrical energy available for ignition. In this example, the line **66** is routed through the hose **40** between (radially) the tube **62** and the sleeve **64**. The sleeve **64** thus serves to secure and protect the line **66**, and the sleeve **64** may limit spill and spewing if there is a hose **40** rupture. In particular, since the line **66** is secured in the hose **40**, the line **66** does not present a tripping concern for workers. Moreover, in rough terrain environments where there are stones, sand, and other objects that could damage the line **66** if it were free, the sleeve **64** shields the line **66** from direct contact with such objects. In further examples, the line **66** may be embedded or partially embedded in the tube **62** or the sleeve **64**.

In this example, the line **66** extends out from the end of the hose **40** and includes a connector **68** that is detachably connectable with a respective one of the integrated fuel cap sensors **50**. For example, FIG. **6** illustrates a representative example of one of the integrated fuel cap sensors **50**. The integrated fuel cap sensor **50** includes a cap portion **50***a* and a fluid level sensor portion **50***b*. The cap portion **50***a* is detachably connectable with a port of a fuel tank. The cap portion **50***a* includes a connector port **50***c*, which is detachably connectable with the connector **60** of the hose **40**. The sensor portion **50***b* includes a sensor **50***d* and a sensor port **50***e* that is detachably connectable with the connector **68** of the line **66**. The fuel cap sensor **50** may also include a vent port that attaches to a drain hose, to drain any overflow into a containment bucket and/or reduce air pressure build-up in a fuel tank. Thus, a user may first mount the cap portion **50***a* on the fuel tank of the equipment, followed by connecting the hose **40** to the port **50***c* and connecting the line **66** to the port **50***e*.

The sensor **50***d* may be any type of sensor that is capable of detecting fluid or fuel level in a tank. In one example, the sensor **50***d* is a guided wave radar sensor. A guided wave

radar sensor may include a transmitter/sensor that emits radar waves, most typically radio frequency waves, down a probe. A sheath may be provided around the probe. For example, the sheath may be a metal alloy (e.g., stainless steel or aluminum) or polymer tube that surrounds the probe. One or more bushings may be provided between the probe and the sheath, to separate the probe from the sheath. The sheath shields the probe from contact by external objects, the walls of a fuel tank, or other components in a fuel tank, which might otherwise increase the potential for faulty sensor readings. The probe serves as a guide for the radar waves. The radar waves reflect off of the surface of the fuel and the reflected radar waves are received into the transmitter/sensor. A sensor controller determines the "time of flight" of the radar waves, i.e., how long it takes from emission of the radar waves for the radar waves to reflect back to the transmitter/sensor. Based on the time, the sensor controller, or the controller **52** if the sensor controller does not have the capability, determines the distance that the radar waves travel. A longer distance thus indicates a lower fuel level (farther away) and a shorter distance indicates a higher fuel level (closer).

The line **66** routes through the hose **40** and back to the reel **42** in the trailer **22**. For example, the line **66** is also routed or hard-wired through the reel **42** to the controller **52**. FIG. **7** illustrates a representative example of the routing in the reel **42**. In this example, the reel **42** includes a spindle **42***b* about which the reel is rotatable. The spindle **42***b* may be hollow, and the line **66** may be routed through the spindle **42***b*. The reel **42** may also include a connector **42***c* mounted thereon. The connector **42***c* receives the line **66** and serves as a port for connection with another line **66***a* to the controller **52**.

The lines **66***a* may converge to one or more communication junction blocks or "bricks" prior to the controller **52**. The communication junction blocks may serve to facilitate the relay of the signals back to the controller **52**. The communication junction blocks may alternatively or additionally serve to facilitate identification of the lines **66**, and thus the signals, with respect to which of the hoses a particular line **66** is associated with. For instance, a group of communication junction blocks may have unique identifiers and the lines **66** into a particular communication junction block may be associated with identifiers. A signal relayed into the controller **52** may thus be associated with the identifier of the communication junction blocks and a particular line **66** of that communication junction block in order to identify which hose the signal is to be associated with. The valves **44** may also communicate with the controller **52** in a similar manner through the communication junction blocks.

As can be appreciated from the examples herein, the station **20** permits continuous hot-refueling with enhanced reliability. While there might generally be a tendency to choose wireless sensor communication for convenience, a hard-wired approach mitigates the potential for signal interference that can arise with wireless. Moreover, by hard-wiring the sensors through the hoses to the controller, wired communication lines are protected from exposure and do not pose additional concerns for workers on a site.

FIG. **8** illustrates another example of a mobile fuel distribution station **120**. In this disclosure, like reference numerals designate like elements where appropriate and reference numerals with the addition of one-hundred or multiples thereof designate modified elements that are understood to incorporate the same features and benefits of the corresponding elements. In this example, the station **120** is similar to station **20** but is configured to deliver, and track, at least two different fluid products.

The first compartment **24** includes two pumps **130***a*/**130***b*. Two different fluids, such as two different fuels, may be provided to the pumps **130***a*/**130***b* from external fuel sources, such as tanker trucks on the site. On the trailer **22**, the pumps **130***a*/**130***b* are fluidly connected via respective fuel lines **132***a*/**132***b* with respective high precision registers **134***a*/**134***b* for metering fuel. The fuel lines **132***a*/**132***b* may include, but are not limited to, hard piping. In this example, the fuel lines **132***a*/**132***b* each include a respective filtration and air eliminator system **136***a*-**1**/**136***a*-**2** and one or more respective sensors **136***b*-**1**/**136***b*-**2**. The sensors **136***b*-**1**/**136***b*-**2** may include a temperature sensor, a pressure sensor, or a combination thereof, which assist in fuel distribution management.

The pump **130***a* and fuel line **132***a* are connected with the one or more manifolds **38** as described above. The pump **130***b* and fuel line **132***b* are connected with the reel **142** and hose **140**. The pump **130***a* serves to provide fuel to the manifolds **38** and then to the reels **42** and hoses **40**. The pump **130***b* serves to separately provide fuel to the reel **142** and hose **140**. Thus, a first type of fuel can be delivered and tracked via the pump **130***a* and hoses **40**, and a second type of fuel can be delivered and tracked via the pump **130***b* and hose **140**. For example, in the station **120**, nineteen hoses **40** may be configured to deliver and track the first type of fuel and one hose **140** may be configured to deliver and track the second type of fuel. As can be appreciated, the station **120** can be modified to have greater or fewer of the hoses **40** that provide the first fuel and a greater number of the hoses **142** that provide the second fuel.

In this example, the hoses **40** are adapted for hot-refueling as discussed above with respect to the station **20**. The hose **142** (or hoses **142** if there are more) may be adapted for a different purpose, such as to fuel on-road vehicles. In this regard, the hoses **40** include the connector ends **40***a* for connecting with the integrated fuel cap sensors **50**. The hose or hoses **142** include or are configured to connect with a different type of end, such as a nozzle dispenser end **140***a*. The nozzle dispenser end **140***a* may include a handle that is configured to dispense fuel when manually depressed by a user. Thus, the hoses **40** and the hoses **142** have different ends that are adapted for different delivery functions.

One example implementation of the station **120** is to deliver and track different fuels, such as a clear diesel fuel and a dyed diesel fuel. Clear diesel fuel is typically used for road vehicles and is subject to government taxes; dyed diesel fuel is typically used for off-road vehicles and is not taxed. The dyed fuel can thus be delivered to off-road equipment at a site using the pump **130***a* and hoses **40**, while clear fuel can be delivered to on-road vehicles at a site using the pump **130***b* and hose **142**. Because the dyed diesel fuel and the clear diesel fuel are dispensed through different pumps and different registers **134***a*/**134***b*, the consumption of these fuels can be separately tracked. In particular, the tax implications of the use of the two fuels can be more easily managed, to ensure with greater reliability that the proper fuels are used for the proper purposes.

FIG. **9** illustrates a system **69** for remotely monitoring and/or managing at least one mobile distribution station **20** (A). It is to be appreciated that the system **69** may include additional mobile distribution stations, shown in phantom at **20** (B), **20** (C), and **20** (D) (collectively mobile distribution stations **20**), for example. The mobile distribution stations **20** may be located at a single work site or located across several different work sites S**1** and S**2**. Each mobile distri-

bution station **20** is in communication with one or more servers **71** that are remotely located from the mobile distribution stations **20** and work sites S**1**/S**2**. In most implementations, the communication will be wireless.

The server **71** may include hardware, software, or both that is configured to perform the functions described herein. The server **71** may also be in communication with one or more electronic devices **73**. The electronic device **73** is external of or remote from the mobile fuel distribution stations **20**. For example, the electronic device **73** may be, but is not limited to, a computer, such as a desktop or laptop computer, a cellular device, or tablet device. The electronic device **73** may communicate and interact in the system **69** via data connectivity, which may involve internet connectivity, cellular connectivity, software, mobile application, or combinations of these.

The electronic device **73** may include a display **73***a*, such as an electronic screen, that is configured to display the fuel operating parameter data of each of the mobile distribution stations **20**. As an example, the electronic device **73** may display in real-time the operating parameter data of each of the mobile distribution stations **20** in the system **69** to permit remote monitoring and management control of the mobile distribution stations **20**. For instance, the operating parameter data may include fuel temperature, fuel pressure, fuel flow, total amount of fuel distributed, operational settings (e.g., low and high fuel level thresholds), or other parameters.

The server **71** may also be in communication with one or more cloud-based devices **75**. The cloud-based device **75** may include one or more servers and a memory for communicating with and storing information from the server **71**.

The server **71** is configured to communicate with the mobile distribution stations **20**. Most typically, the server **71** will communicate with the controller **52** of the mobile distribution station **20**. In this regard, the controller **52** of each mobile distribution station **20** may be include hardware, software, or both that is configured for external communication with the server **71**. For example, each controller **52** may communicate and interact in the system **69** via data connectivity, which may involve internet connectivity, cellular connectivity, software, mobile application, or combinations of these.

The server **71** is configured to receive operating parameter data from the mobile distribution stations **20**. The operating parameter data may include or represent physical measurements of operating conditions of the mobile distribution station **20**, status information of the mobile distribution station **20**, setting information of the mobile distribution station **20**, or other information associated with control or management of the operation of the mobile distribution station **20**.

For example, the server **71** utilizes the information to monitor and auto-manage the mobile distribution station **20**. The monitoring and auto-management may be for purposes of identifying potential risk conditions that may require shutdown or alert, purposes of intelligently enhancing operation, or purposes of reading fuel or fluid levels in real-time via the sensors **50**. As an example, the server **71** may utilize the information to monitor or display fuel or fluid levels, or determine whether the fuel operating parameter data is within a preset limit and send a control action in response to the operating parameter data being outside the preset limit. As will described in further detail below, the control action may be a shutdown instruction to the mobile fuel distribution stations **20**, an adjustment instruction to the mobile fuel distribution stations **20**, or an alert to the electronic device **73**.

FIG. **10** illustrates a workflow logic diagram of an example control method **77** which can be implemented with the system **69** or with other configurations of one or more mobile distribution stations **20** and one or more servers. In general, the illustrated method **77** can be used to provide a shutdown instruction or an alert if operating parameter data of one or more mobile distribution stations **20** is outside of a preset limit. For instance, if fuel pressure or fuel temperature in one of the mobile distribution stations **20** exceeds one or more limits, the method **77** shuts down the mobile distribution station **20** and/or sends an alert so that appropriate action can, if needed, be taken in response to the situation. In particular, in hot-refueling implementations, the ability to automatically shut down or to provide a remote alert may facilitate enhancement of reliable and safe operation.

Referring to FIG. **10**, one or more current or instantaneous operating parameters are read (i.e., by the controller **52**). An operating parameter may include, but is not limited to, fuel temperature and fuel pressure. Other parameters may additionally or alternatively be used, such as pump speed or power and fuel flow. Parameters may be first order parameters based on first order readings from sensor signals, or second order parameters that are derived or calculated from first order parameters or first order sensor signals. For instance, temperature is a first order parameter and direct detection of temperature to produce signals representative of temperature constitute first order sensor signals. The product of temperature and pressure, for example, is a second order parameter that is based on first order sensor signals of each of temperature and pressure. As will be appreciated, there may be additional types of second order parameters based on temperature, pressure, power, flow, etc., which may or may not be weighted in a calculation of a second order parameter.

In this example, the current operating parameter is compared with a prior operating parameter stored in memory in the controller **52**. A difference in the current operating parameter and the prior operating parameter is calculated to produce a change (delta) value in the operating parameter. The change value is used as the operating parameter data for control purposes in the method **77**. The operating parameter data thus represents the change in the operating parameter from the prior reading to the current reading. Use of the change value as the operating parameter data serves to reduce the amount of data that is to be sent in connection with the method **77**. For example, the actual operating parameter values may be larger than the change values and may thus require more memory and bandwidth to send than the change values. The change values are sampled and calculated at a predesignated interval rate. In this example, the interval rate is once per second. Each operating parameter is stored in memory for use as the next "prior" operating parameter for comparison with a subsequent "new" operating parameter reading. The controller **52** may be programmed to perform the above steps. As will be appreciated, the steps above achieve data efficiency, and actual values could alternatively or additionally be used if memory and bandwidth permit.

Each operating parameter data reading (i.e., change value) is published or sent via IoT (Internet of Things) Gateway to an IoT Platform, which may be implemented fully or partially on the server **71** and cloud device **75**. The operating parameter data may also contain additional information, such as but not limited to, metadata with time stamp

information and identification of the individual mobile distribution station **20**. In this example, the operating parameter data of interest is associated with fuel pressure and fuel temperature. In the method **77**, the operating parameter data for fuel temperature and fuel pressure are compared to, respectively, a preset fuel temperature shutdown limit and a preset fuel pressure shutdown limit. The shutdown limits may be temperature and pressure limits corresponding to rated limits of the pump **30**, fuel line **32**, and manifold **38**, for example.

If the temperature or pressure are outside of the preset fuel temperature or pressure shutdown limits, the method **77** initiates a shutdown event. In this example, the shutdown event includes identifying the particular mobile distribution station **20** associated with the temperature or pressure that is outside of the preset limit, forming a shutdown instruction message, and publishing or sending the shutdown instruction message via the IoT Gateway to the corresponding identified mobile distribution station **20**.

Upon receiving the shutdown instruction message, the controller **52** of the identified mobile distribution station **20** validates and executes the shutdown instruction. For instance, shutdown may include shutting off the pump **30** and closing all of the control valves **44**. In this example, the method **77** includes a timing feature that waits for confirmation of shutdown. Confirmation may be generated by the controller **52** performing an electronic check of whether the pump **30** is off and the control valves **44** are closed. Confirmation may additionally or alternatively involve manual feedback via input into the controller **52** by a worker at the identified mobile distribution station **20**.

Once shutdown is confirmed by the controller **52**, confirmation of shutdown is published or sent via the Iot Gateway to the IoT Platform for subsequent issuance of an alert. If there is no confirmation of shutdown by a maximum preset time threshold, a non-confirmation of shutdown is published or sent for subsequent issuance of an alert.

If the temperature and/or pressure is not outside of the preset fuel temperature or pressure shutdown limits, the method **77** in this example continues to determine whether the fuel temperature and fuel pressure with are, respectively, outside of a preset fuel temperature threshold limit and a preset fuel pressure threshold limit. The threshold limits will typically be preset at levels which indicate a potential for shutdown conditions. For example, the threshold limits may be intermediate temperature or pressure levels which, if exceeded, may indicate an upward trend in temperature or pressure toward the shutdown limits. In one example, the threshold limits are rate of change thresholds. For instance, a change value in temperature and/or pressure that exceeds a corresponding threshold change limit may be indicative that temperature and/or pressure is rapidly elevating toward the shutdown condition.

In response to the temperature and/or pressure being outside of the preset fuel temperature or pressure threshold limits, the method **77** initiates an alert event. In this example, the alert event includes initiating an event notification. In the event notification, the method **77** conducts a lookup of notification channels and then issues an alert via one or more selected notification channels, such as an alert on the display **73***a*. As an example, the notification channels may be selected by user preferences and may include alerts by email, SMS (short message service), and/or mobile device app notification (e.g., banners, badges, home screen alerts, etc.). The event notification is also used for alerts of confirmation and non-confirmation of shutdown. The method **77** thus provides capability to nearly instantaneously issue an alert that can be immediately and readily viewed in real-time on the electronic device **73** so that appropriate action, if needed, can be taken. In one example, such actions may include adjustment of operation settings of the mobile distribution station **20**, which may be communicated and implemented via the system **69** from the electronic device **73** to the mobile distribution station **20**.

FIG. **11** illustrates a workflow logic diagram of an example control management method **79** which can be implemented with the method **77** and with the system **69** or with other configurations of one or more mobile distribution stations **20** and one or more servers. For example, the method **79** is used to identify shutdown conditions and/or remotely intelligently auto-manage operation of one or more mobile distribution stations **20**. The initial portion of the method **79** with respect to generating operating parameters data may be similar to the method **77**; however, the method **79** uses the operating parameter data to calculate an efficiency score and identify shutdown conditions or other actions to be taken in response to the efficiency score. For example, the efficiency score is a second order parameter and is a calculation based on multiple fuel operating parameters selected from fuel temperature, fuel pressure, fuel flow, and time. The efficiency score is then compared to an efficiency score shutdown limit. If the calculated efficiency score exceeds the limit, the method **79** initiates the shutdown event as described above. As an example, the efficiency score is the product of a safety score multiplied by one or more of a temperature score, a pressure score, a flow rate score, a tank level score, or the sum of two or more of these scores. For instance, the efficiency score is as shown in Equation I below.

Efficiency Score=Safety Score×(Temperature Score+Pressure Score+Flow Rate Score+Tank Level Score). Equation I

In one example, the safety score is a product of a safety factor and logic values of one or zero for each of the temperature score, the pressure score, the flow rate score, and the tank level score. Thus, if any of the temperature score, the pressure score, the flow rate score, or the tank level score fails, resulting in a logic value of zero, the efficiency score will be zero. In response to an efficiency score of zero, the method **79** initiates the shutdown event as described above. The logic values are assigned according to whether the given parameter is within a predetermined minimum/maximum range. If the parameter is within the range, the logic value is one and if the parameter is outside of the range, the value is zero. As an example, the safety score may be determined by:

Safety Score=(Safety Check Positive Response/Total Safety Checks)*(IF(Temperature Reading between MIN LIMIT and MAX LIMIT)THEN 1 ELSE 0))*(IF(Pressure Reading between MIN LIMIT and MAX LIMIT)THEN 1 ELSE 0))*(IF(Flow Rate Reading between MIN LIMIT and MAX LIMIT)THEN 1 ELSE 0))*(IF(Tank Inventory Reading between MIN LIMIT and MAX LIMIT)THEN 1 ELSE 0)),

wherein

Temperature Score=(((Temperature Reading−Min Limit)/Temperature Reading)+((Max Limit+Temperature Reading)/Temperature Reading)))/2,

Pressure Score=(((Pressure Reading−Min Limit)/Pressure Reading)+((Max Limit+Pressure Reading)/Pressure Reading)))/2,

Flow Rate Score=(((Flow Rate Reading−Min Limit)/Flow Rate Reading)+((Max Limit+Flow Rate Reading)/Flow Rate Reading)))/2, and

Tank Level Score=(((Tank Level Reading−Min Limit)/Tank Level Reading)+((Max Limit+Tank Level Reading)/Tank Level Reading)))/2.

In one example, the safety factor includes a calculation based on safety checks of a mobile distribution station **20**. For instance, the safety factor is the quotient of positive or passing safety checks divided by the total number of safety check made. A safety check may involve periodic validation of multiple parameters or conditions on the site of a station **20** and/or in the station **20**. As examples, the safety check may include validation that electrical power supply is fully functional (e.g., a generator), validation of oil levels (e.g., in a generator), validation of whether there are any work obstructions at the site, etc. Thus, each safety check may involve validation of a set of parameters and conditions. If validation passes, the safety check is positive and if validation does not pass the safety check is negative. As an example, if **5** safety checks are conducted for a station **20** and four of the checks pass and one does not pass, the safety factor is equal to four divided by five, or 0.8.

The method **79** also uses the efficiency score to actively intelligently auto-manage operation of one or more of the mobile distribution stations **20**. For example, the efficiency score is compared in the method **79** with an efficiency score threshold limit or efficiency score range. If the efficiency score is outside of the limit or range, the method **79** initiates an adjustment event to adjust settings of the operating parameters of the mobile distribution station **20**. For example, pumping rate or power may be changed to increase or decrease fuel pressure. In further examples in the table below, preset actions are taken in response to efficiency scores within preset ranges.

Efficiency Score	Action
<=1	SHUTDOWN
>1 AND <=2	ALERT
>2 AND <=3	ADJUST SETTINGS
>3 AND <=4	NO ACTION

The adjustment event may include forming an adjustment instruction message and publishing or sending the adjustment instruction message to the mobile distribution station **20** via the IoT Gateway. Upon receiving the adjustment instruction message the controller **52** of the mobile distribution station **20** validates and executes the message. The message constitutes a control action to change one or more of the operating parameters to move the efficiency score within the limit or range. As an example, pumping rate is changed to change fuel pressure. Other parameters may additionally or alternatively be adjusted to change the fuel efficiency score, such as but not limited to, fuel tank upper and lower thresholds, sequence of opening/closing control valves **44**, and number of control valves **44** that may be open at one time. Thus, once implemented, the method **79** can serve to auto-adjust operation of one or more of the mobile distribution stations **20**, without human intervention, to achieve enhanced or optimize fuel distribution.

In one example, a rate of fuel consumption of one or more pieces of the equipment may be calculated, and the upper and/or lower fuel level threshold settings are changed in response to the calculated rate of fuel consumption. For instance, if consumption is lower or higher than a given fuel level threshold setting warrants, the fuel level threshold setting is responsively auto-adjusted up or down for more efficient operation. For a low consumption rate, there may be a downward adjustment of the lower fuel level threshold, since there is lower likelihood that the low consumption rate will lead to a fully empty condition in the equipment. Similarly, for a high consumption rate, there may be an upward adjustment of the lower fuel level threshold, since there is higher likelihood that the high consumption rate will lead to a fully empty condition in the equipment. Thus, the mobile distribution station **20** can be operated more efficiently and safely by distributing fuel at proper times to ensure filling the equipment with desired safety margins.

Similar to the shutdown instruction message described above, the method **79** may include a timing feature that waits for confirmation of adjustment. Once adjustment is confirmed by the controller **52**, confirmation of adjustment is published or sent via the Iot Gateway to the IoT Platform for subsequent issuance of an alert. If there is no confirmation of adjustment by a maximum preset time threshold, a non-confirmation of adjustment is published or sent for subsequent issuance of an alert. In further examples, the method **79** may exclude use of the efficiency score for purposes of shutdown or for purposes of intelligent auto-management. That is, the method **79** may employ the efficiency score for only one or the other of shutdown or intelligent auto-management.

Additionally or alternatively, the system **69** with one or more mobile distribution stations **20** and one or more servers may be used for centralized, intelligent auto-filling. For example, fuel levels may be tracked in real-time or near real-time. When a fuel level associated with one of the stations **20** reaches the lower threshold, described above, an instruction may be sent via the system **69** to active the pump **30** and open the appropriate control valve **44**. Moreover, the system **69** can ensure that there is minimal or zero delay time from the time of identifying the low threshold to the time that filling begins. Thus, at least a portion of the functionality of the controllers **52** may be remotely and centrally based in the server of the system **69**.

Although a combination of features is shown in the illustrated examples, not all of them need to be combined to realize the benefits of various embodiments of this disclosure. In other words, a system designed according to an embodiment of this disclosure will not necessarily include all of the features shown in any one of the Figures or all of the portions schematically shown in the Figures. Moreover, selected features of one example embodiment may be combined with selected features of other example embodiments.

The preceding description is exemplary rather than limiting in nature. Variations and modifications to the disclosed examples may become apparent to those skilled in the art that do not necessarily depart from this disclosure. The scope of legal protection given to this disclosure can only be determined by studying the following claims.

What is claimed is:

1. A fuel distribution station comprising:

a mobile trailer;

a pump on the mobile trailer;

a manifold on the mobile trailer and connected with the pump;

a plurality of hoses in fluid communication with the manifold;

a plurality of valves on the mobile trailer, each of the valves situated between the manifold and a respective different one of the hoses;

a plurality of fluid level sensors, each of the fluid level sensors associated with a respective different one of the hoses, and the fluid level sensors operable to detect respective different fluid levels; and

a controller configured to

operate the valves responsive to signals from the fluid level sensors,

activate and deactivate the pump, and

identify whether there is a risk condition based upon at least one variable operating parameter and deactivate the pump responsive to the risk condition,

wherein the variable operating parameter includes fluid pressure, and the controller identifies whether there is the risk condition based upon change of the fluid pressure within a preset time period of the pump being activated.

2. The fuel distribution station as recited in claim **1**, wherein the variable operating parameter includes fluid pressure, and the controller identifies whether there is the risk condition based upon the fluid pressure exceeding a preset fluid pressure threshold.

3. The fuel distribution station as recited in claim **1**, wherein the variable operating parameter includes one of the fluid levels, and the controller identifies whether there is the risk condition based upon a change in the one of the fluid levels.

4. The fuel distribution station as recited in claim **1**, wherein the variable operating parameter includes fluid temperature, and the controller identifies whether there is the risk condition based upon the fluid temperature exceeding a preset fluid temperature threshold.

5. The fuel distribution station as recited in claim **4**, wherein the fluid temperature is taken at a point between the pump and the manifold.

6. The fuel distribution station as recited in claim **4**, wherein the fluid temperature is taken at a point proximate the pump.

7. The fuel distribution station as recited in claim **1**, further comprising an electronic register on the mobile trailer and connected with the pump.

8. The fuel distribution station as recited in claim **7**, further comprising an air eliminator between the pump and the electronic register.

9. The fuel distribution station as recited in claim **6**, wherein the fluid temperature is taken at a point proximate the pump.

10. The fuel distribution station as recited in claim **1**, wherein the controller identifies that there is the risk condition when the change of the fluid pressure is a decrease in the pressure within the preset time period.

11. A fuel distribution station comprising:

a mobile trailer;

a pump on the mobile trailer;

a manifold on the mobile trailer and connected with the pump;

a plurality of hoses in fluid communication with the manifold;

a plurality of valves on the mobile trailer, each of the valves situated between the manifold and a respective different one of the hoses;

a plurality of fluid level sensors, each of the fluid level sensors associated with a respective different one of the hoses, and the fluid level sensors operable to detect respective different fluid levels; and

a controller configured to

activate and deactivate the pump,

open and close the valves responsive to signals from the fluid level sensors, and

identify whether there is a risk condition based upon at least one variable operating parameter and deactivate the pump responsive to the risk condition, wherein the at least one variable operating parameter includes fill level of a tank such that the risk condition exists if the controller identifies that one of the valves is opened to begin filling that tank but there is no change in the fluid level associated with that tank within a preset time period.

12. The fuel distribution station as recited in claim **10**, wherein the controller identifies that there is the risk condition when the change of the fluid pressure is a decrease that exceeds a preset threshold decrease in the pressure within the preset time period.

* * * * *

EXHIBIT 5

US010974955B2

(12) **United States Patent**
Shock

(10) **Patent No.: US 10,974,955 B2**
(45) **Date of Patent: *Apr. 13, 2021**

(54) **MOBILE DISTRIBUTION STATION FOR FLUID DISPENSING**

(71) Applicant: **Fuel Automation Station, LLC**, Birmingham, MI (US)

(72) Inventor: **Ricky Dean Shock**, Victoria, TX (US)

(73) Assignee: **FUEL AUTOMATION STATION, LLC**, Birmingham, MI (US)

(*) Notice: Subject to any disclaimer, the term of this patent is extended or adjusted under 35 U.S.C. 154(b) by 0 days.

This patent is subject to a terminal disclaimer.

(21) Appl. No.: **16/700,095**

(22) Filed: **Dec. 2, 2019**

(65) **Prior Publication Data**

US 2020/0102208 A1 Apr. 2, 2020

Related U.S. Application Data

(63) Continuation of application No. 15/890,584, filed on Feb. 7, 2018, now Pat. No. 10,494,251, which is a (Continued)

(51) **Int. Cl.**
B67D 7/04 (2010.01)
B67D 7/84 (2010.01)
(Continued)

(52) **U.S. Cl.**
CPC ***B67D 7/845*** (2013.01); ***B60P 3/035*** (2013.01); ***B62D 63/08*** (2013.01); ***B67D 7/04*** (2013.01);
(Continued)

(58) **Field of Classification Search**
CPC . B67D 7/845; B67D 7/04; B67D 7/40; B67D 7/78; B67D 7/62; B67D 7/348;
(Continued)

(56) **References Cited**

U.S. PATENT DOCUMENTS

2,340,070 A 1/1944 McCauley et al.
2,516,150 A 7/1950 Samiran
(Continued)

FOREIGN PATENT DOCUMENTS

DE 1147397 4/1963
DE 20106400 10/2001
(Continued)

OTHER PUBLICATIONS

Oilfield Business: Technologies. Frac Shack Inc. introduces world's first Bi-Fuel Distribution Unit for hydraulic fracturing industry. Texas Oil & Gas: The National Magazine for Oil & Gas in Texas. vol. 4, Issue 2. 2015. p. 27.
(Continued)

Primary Examiner — Nicolas A Arnett
(74) *Attorney, Agent, or Firm* — Carlson, Gaskey & Olds, P.C.

(57) **ABSTRACT**

A distribution station includes a container, a pump, first and second manifolds fluidly connected with the pump, reels, hoses, valves, fluid level sensors, and a controller. Each hose is connected with a different one of the reels. A portion of the reels are connected to be fed from the first manifold and another portion of the reels are connected to be fed from the second manifold. Each valve is situated between one of the first or second manifolds and a respective different one of the reels. Each fluid level sensor is associated with a different one of the hoses. The controller is configured to individually open and close the valves responsive to the fluid level sensors.

20 Claims, 5 Drawing Sheets

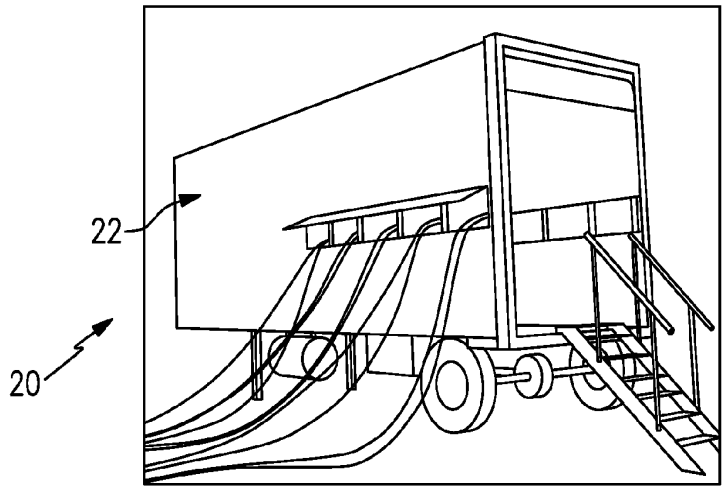

Related U.S. Application Data

continuation of application No. 15/416,198, filed on Jan. 26, 2017, now Pat. No. 9,932,220, which is a continuation of application No. 15/290,371, filed on Oct. 11, 2016, now Pat. No. 9,586,805.

(51) **Int. Cl.**

B67D 7/40	(2010.01)
B60P 3/035	(2006.01)
B67D 7/62	(2010.01)
B67D 7/78	(2010.01)
B62D 63/08	(2006.01)
E21B 43/26	(2006.01)
B67D 7/34	(2010.01)
B67D 7/14	(2010.01)

(52) **U.S. Cl.**
CPC ***B67D 7/40*** (2013.01); ***B67D 7/62*** (2013.01); ***B67D 7/78*** (2013.01); *B67D 7/145* (2013.01); *B67D 7/348* (2013.01); *E21B 43/26* (2013.01)

(58) **Field of Classification Search**
CPC B67D 7/145; B62D 63/08; B60P 3/035; E21B 43/26
See application file for complete search history.

(56) **References Cited**

U.S. PATENT DOCUMENTS

2,769,572	A	11/1956	Harman et al.
2,777,461	A	1/1957	Wildhaber
2,966,921	A	1/1961	Whiteman
3,028,010	A	4/1962	Headrick
3,136,295	A	6/1964	Gramo
3,547,141	A	12/1970	Alexander
3,605,798	A	9/1971	Green et al.
3,618,643	A	11/1971	Thomson
3,625,399	A	12/1971	Heisler
3,677,284	A	7/1972	Mendez
3,881,509	A	5/1975	Newton
4,139,019	A	2/1979	Bresie et al.
4,284,210	A	8/1981	Horak
4,511,311	A	4/1985	Olson
4,591,115	A	5/1986	DeCarlo
4,651,788	A	3/1987	Grosskreuz et al.
4,728,005	A	3/1988	Jacobs et al.
4,930,665	A	6/1990	Devine
5,406,988	A	4/1995	Hopkins
5,454,408	A	10/1995	DiBella et al.
5,465,766	A	11/1995	Siegele et al.
5,503,199	A	4/1996	Whitley, II et al.
5,538,051	A	7/1996	Brown et al.
5,551,309	A	9/1996	Goossens et al.
5,651,400	A	7/1997	Corts et al.
5,660,358	A	8/1997	Grafwallner et al.
5,708,424	A	1/1998	Orlando et al.
5,749,339	A	5/1998	Graham et al.
5,927,603	A	7/1999	McNabb
5,884,675	A	12/1999	Krasnov
6,098,646	A	8/2000	Hennemann et al.
6,206,056	B1	3/2001	Lagache
6,564,615	B1	5/2003	Carter
6,601,000	B1	7/2003	Barlian et al.
6,651,706	B2	11/2003	Litt
6,697,705	B2	2/2004	Johnson et al.
6,755,225	B1	6/2004	Niedwiecki et al.
6,761,194	B1	7/2004	Blong
6,779,569	B1	8/2004	Teer, Jr. et al.
6,786,245	B1	9/2004	Eichelberger et al.
7,063,276	B2	6/2006	Newton
7,106,026	B2	9/2006	Moore
7,353,808	B2	4/2008	Kakoo
7,415,995	B2	8/2008	Plummer et al.
7,458,543	B2	12/2008	Cutler et al.
7,568,507	B2	8/2009	Farese et al.
7,602,143	B2	12/2009	Capizzo
7,628,182	B2	12/2009	Poulter
7,937,215	B2	5/2011	Humphrey
7,938,151	B2	5/2011	Hockner
8,448,750	B2	5/2013	Gaugush et al.
9,346,662	B2	5/2016	Van Vliet et al.
9,371,830	B2	6/2016	Moffitt, Jr.
9,371,831	B2	6/2016	Moffitt, Jr.
9,586,805	B1	3/2017	Shock
9,815,683	B1 *	11/2017	Kalala B67D 7/3218
9,932,220	B1 *	4/2018	Shock B67D 7/40
9,981,840	B2 *	5/2018	Shock B67D 7/465
10,087,065	B2 *	10/2018	Shock B67D 7/845
10,150,662	B1 *	12/2018	Shock B67D 7/84
10,196,258	B2 *	2/2019	Kalala B67D 7/08
10,494,251	B2 *	12/2019	Shock B67D 7/845
10,633,243	B2 *	4/2020	Shock B65H 75/4402
10,759,649	B2 *	9/2020	Haile B67D 7/04
2001/0017815	A1	8/2001	Ackermann et al.
2005/0109561	A1	5/2005	Chopra
2007/0079891	A1	4/2007	Farese et al.
2007/0164031	A1	7/2007	Holz
2007/0181212	A1	8/2007	Fell
2016/0076533	A1	3/2016	Moffitt, Jr.

FOREIGN PATENT DOCUMENTS

DE	10309307	9/2004
DE	102006025025	12/2006
DE	102006038652	2/2008
EP	0161042	11/1985
EP	0433041	6/2001
GB	2485832	5/2012
RU	28347	3/2003
RU	91135	1/2010
RU	2452668	1/2012
SU	949644	8/1982
WO	0177006	10/2001
WO	03029721	4/2003
WO	03093118	11/2003
WO	2006005686	1/2006
WO	2006116572	11/2006
WO	2007087849	8/2007
WO	2008083830	7/2008
WO	2009026607	3/2009
WO	20090608065	6/2009

OTHER PUBLICATIONS

Frac Shack International. Publications & Endorsements. Retrieved Aug. 23, 2016 from: http://www.fracshack.com.

Frac Shack International. Technology. Retrieved Aug. 23, 2016 from: http://www.fracshack.com.

Frac Shack International. Design Benefits. Retrieved Aug. 23, 2016 from: http://www.fracshack.com.

Frac Shack International. Service. Retrieved Aug. 23, 2016 from: http://www.fracshack.com.

Frac Shack International. Frac Shack Series—Series A. Retrieved Aug. 23, 2016 from: http://www.fracshack.com.

Frac Shack International. Frac Shack Series—Series B. Retrieved Aug. 23, 2016 from: http://www.fracshack.com.

Frac Shack International. Frac Shack Series—Series C. Retrieved Aug. 23, 2016 from: http://www.fracshack.com.

Frac Shack International. Frac Shack Series—Series D. Retrieved Aug. 23, 2016 from: http://www.fracshack.com.

Frac Shack International. Frac Shack Series—Series E. Retrieved Aug. 23, 2016 from: http://www.fracshack.com.

Frac Shack International. Frac Shack Series—Series EG. Retrieved Aug. 23, 2016 from: http://www.fracshack.com.

Mann Tek. Dry Disconnect Couplings. Retrieved Jul. 22, 2016 from: http://www.manntek.com/products/drydisconnectcouplings p. 1-4.

Mann Tek. Dry Aviation Couplings. Retrieved Jul. 22, 2016 from: http://www.manntek.com/products/dryaviationcouplings p. 1-4.

(56) **References Cited**

OTHER PUBLICATIONS

Water, J. (2013). Better Safe than Sorry: Frac Shack a welcome addition to the oil patch. Jan. 2, 2013. Retrieved Aug. 23, 2016 from: http://www.pipelinenewsnorth.ca/better-safe-than-sorry-1.1123066.
Shimazaki, H. (1986). Development of centralized fueling and management system of kerosene heating machine. Nisseki Technical Review, vol. 28(4). Jul. 1986. pp. 184-188.
Technical Document. Surface vehicle standard. SAE International. Sep. 2014. pp. 1-5.

* cited by examiner

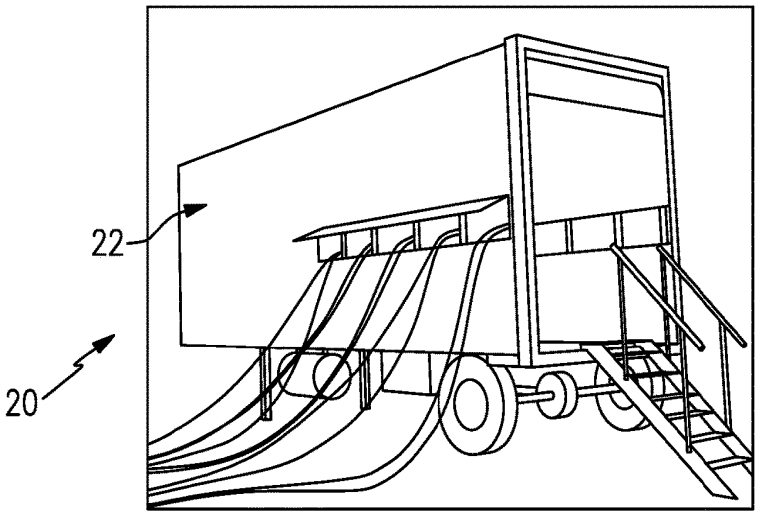
22
20

FIG.1

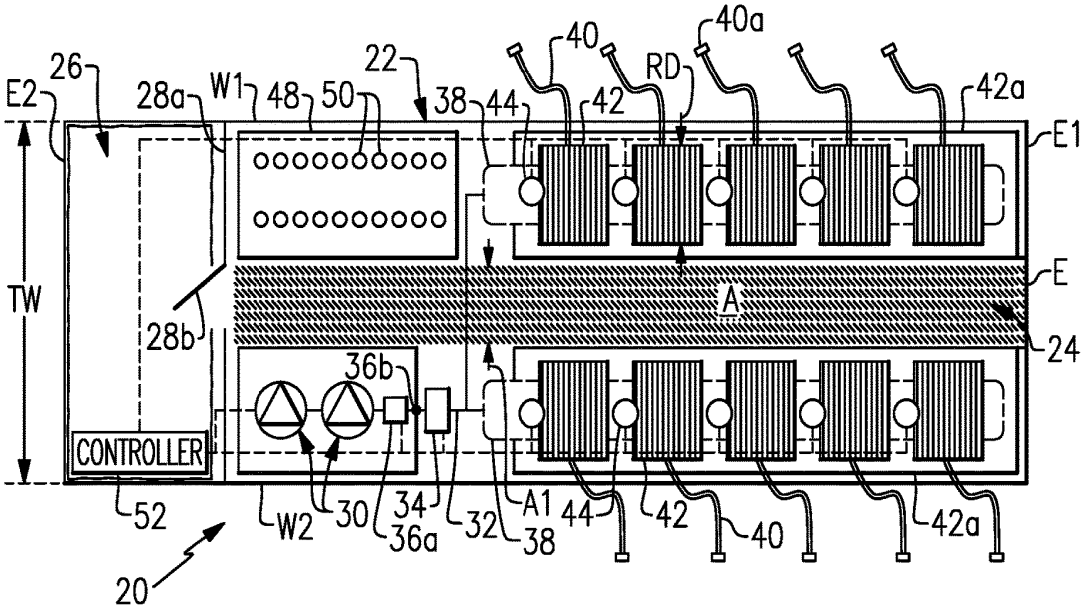
26
E2
28a
W1
48
50
22
38
44
40
42
RD
40a
42a
E1
TW
28b
A
E
24
36b
CONTROLLER
52
W2
30
34
36a
32
A1
38
44
42
40
42a
20

FIG.2

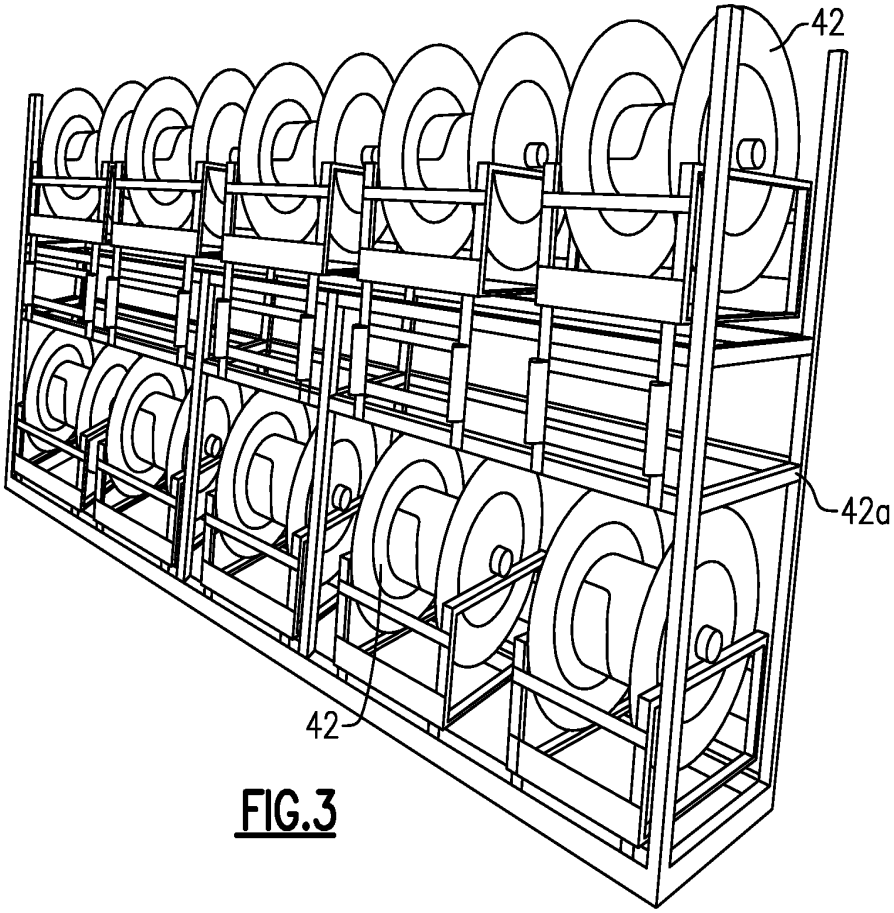

FIG.3

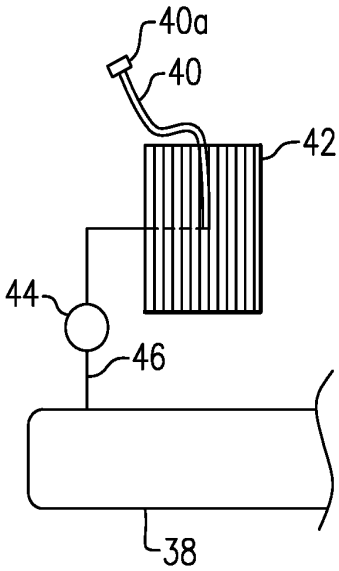

FIG.4

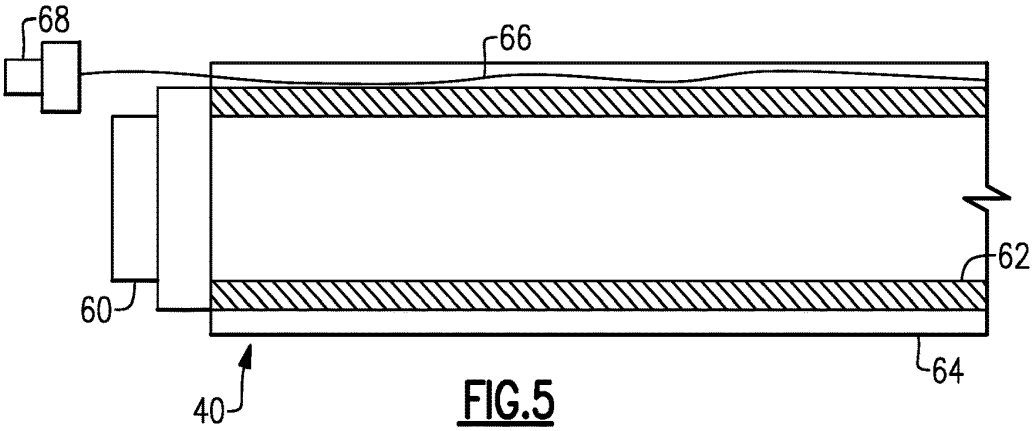

FIG.5

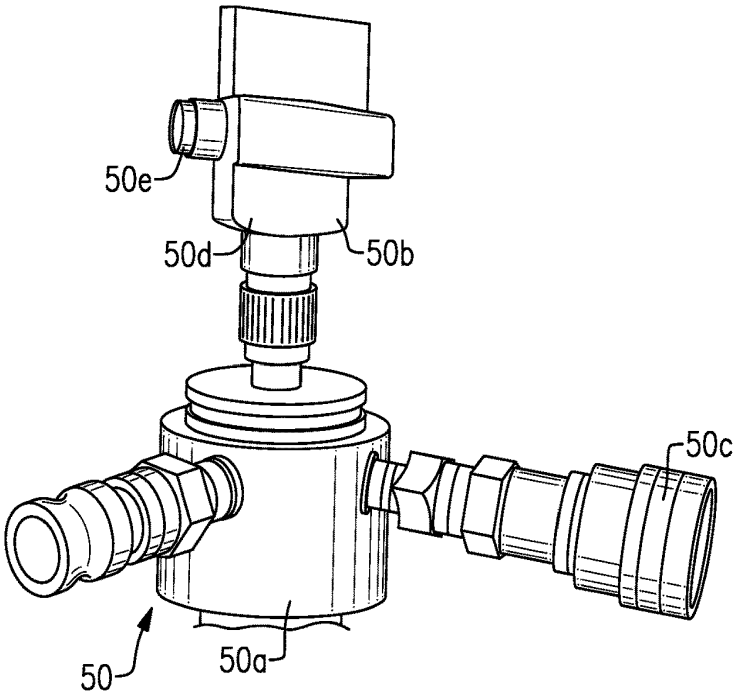

FIG.6

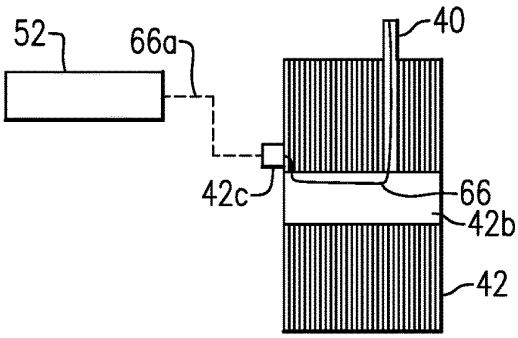

FIG.7

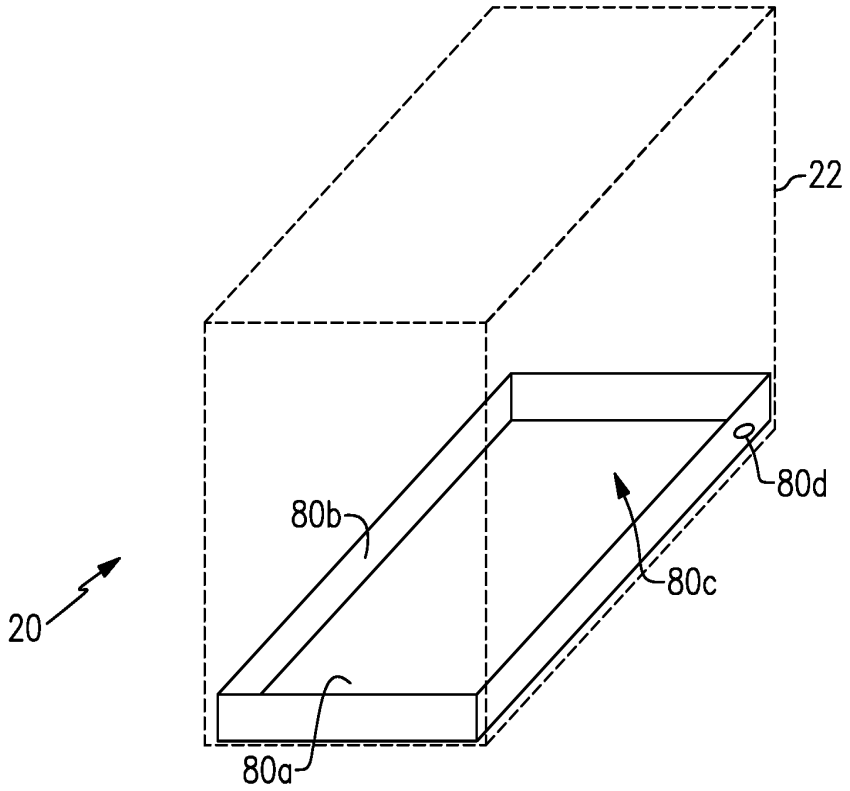

FIG.8

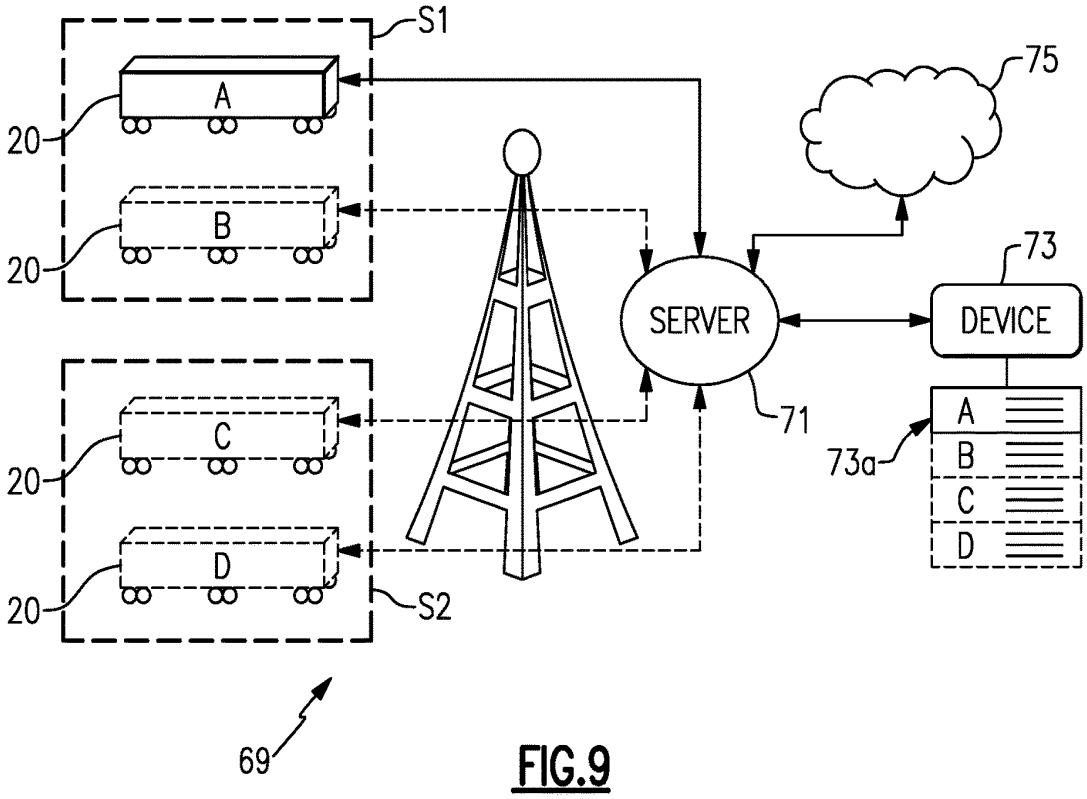

FIG.9

MOBILE DISTRIBUTION STATION FOR FLUID DISPENSING

CROSS-REFERENCE TO RELATED APPLICATION

The present disclosure is a continuation of U.S. patent application Ser. No. 15/890,584, filed Feb. 7, 2018, which is a continuation of U.S. patent application Ser. No. 15/416,198, filed Jan. 26, 2017, now issued as U.S. Pat. No. 9,932,220, which is a continuation of U.S. patent application Ser. No. 15/290,371, filed Oct. 11, 2016, which is now issued as U.S. Pat. No. 9,586,805.

BACKGROUND

Hydraulic fracturing (also known as fracking) is a well-stimulation process that utilizes pressurized liquids to fracture rock formations. Pumps and other equipment used for hydraulic fracturing typically operate at the surface of the well site. The equipment may operate semi-continuously, until refueling is needed, at which time the equipment may be shut-down for refueling. Shut-downs are costly and reduce efficiency. More preferably, to avoid shut-downs fuel is replenished in a hot-refueling operation while the equipment continues to run. This permits fracking operations to proceed fully continuously; however, hot-refueling can be difficult to reliably sustain for the duration of the fracking operation.

SUMMARY

A distribution station according to an example of the present disclosure includes a container that has first and second opposed side walls that join first and second opposed end walls, a pump, first and second manifolds fluidly connected with the pump, reels, hoses, valves, fluid level sensors, and a controller. Each hose is connected with a different one of the reels. A portion of the reels are connected to be fed from the first manifold and another portion of the reels are connected to be fed from the second manifold. Each valve is situated between one of the first or second manifolds and a respective different one of the reels. Each fluid level sensor is associated with a different one of the hoses. The controller is configured to individually open and close the valves responsive to the fluid level sensors.

BRIEF DESCRIPTION OF THE DRAWINGS

The various features and advantages of the present disclosure will become apparent to those skilled in the art from the following detailed description. The drawings that accompany the detailed description can be briefly described as follows.

FIG. **1** illustrates an example mobile distribution station.

FIG. **2** illustrates an internal layout of a mobile distribution station.

FIG. **3** illustrates an isolated view of hose reels on a support rack used in a mobile distribution station.

FIG. **4** illustrates an example of a connection between a manifold, a control valve, and a reel.

FIG. **5** illustrates a sectioned view of an example hose for a mobile distribution station.

FIG. **6** illustrates an example of an integrated fuel cap sensor for a mobile distribution station.

FIG. **7** illustrates an example of the routing of a sensor communication line through a reel in a mobile distribution station.

FIG. **8** illustrates an example of a mobile distribution station with an integrated floor pan.

FIG. **9** illustrates a system that can be used to remotely monitor and manage one or more mobile distribution stations.

DETAILED DESCRIPTION

FIG. **1** illustrates a mobile distribution station **20** and FIG. **2** illustrates an internal layout of the station **20**. As will be described, the station **20** may serve in a "hot-refueling" capacity to distribute fuel to multiple pieces of equipment while the equipment is running, such as fracking equipment at a well site. As will be appreciated, the station **20** is not limited to applications for fracking or for delivering fuel. The examples herein may be presented with respect to fuel delivery, but the station **20** may be used in mobile delivery of other fluids, in other gas/petroleum recovery operations, or in other operations where mobile refueling or fluid delivery will be of benefit.

In this example, the station **20** includes a mobile trailer **22**. Generally, the mobile trailer **22** is elongated and has first and second opposed trailer side walls W**1** and W**2** that join first and second opposed trailer end walls E**1** and E**2**. Most typically, the trailer **22** will also have a closed top (not shown). The trailer side walls W**1**/W**2** define a trailer width, TW. The mobile trailer **22** may have wheels that permit the mobile trailer **22** to be moved by a vehicle from site to site to service different hot-refueling operations.

In this example, the mobile trailer **22** has two compartments. A first compartment **24** includes the physical components for distributing fuel, such as diesel fuel, and a second compartment **26** serves as an isolated control room for managing and monitoring fuel distribution. The compartments **24**/**26** are separated by an inside wall **28***a* that has an inside door **28***b*. The second compartment **26** may be insulated with a fire resistant or retardant material **26***a*. In the event of a fire threat, a worker may take cover in the second compartment **26**. The fire resistant or retardant material **26***a* may shield the second compartment and thus temporarily protect the worker under such circumstances. The second compartment **26** may include an auxiliary escape door to provide external egress from the trailer **22**. Thus, if needed, a worker may exit the trailer **22** other than by the first compartment **24**.

The first compartment **24** includes one or more pumps **30**. Fuel may be provided to the one or more pumps **30** from an external fuel source, such as a tanker truck on the site. On the trailer **22**, the one or more pumps **30** are fluidly connected via a fuel line **32** with a high precision register **34** for metering fuel. The fuel line **32** may include, but is not limited to, hard piping. In this example, the fuel line **32** includes a filtration and air eliminator system **36***a* and one or more sensors **36***b*. Although optional, the system **36***a* is beneficial in many implementations, to remove foreign particles and air from the fuel prior to delivery to the equipment. The one or more sensors **36***b* may include a temperature sensor, a pressure sensor, or a combination thereof, which assist in fuel distribution management.

The fuel line **32** is connected with one or more manifolds **38**. In the illustrated example, the station **20** includes two manifolds **38** that arranged on opposed sides of the compartment **24**. As an example, the manifolds **38** are elongated tubes that are generally larger in diameter than the fuel line

32 and that have at least one inlet and multiple outlets. Each hose **40** is wound, at least initially, on a reel **42** that is rotatable to extend or retract the hose **40** externally through one or more windows of the trailer **22**. Each reel **42** has a reel diameter RD, which is the outside diameter or dimension of the reel **42**. Most typically, all or substantially all of the reels **42** will be the same size and thus have a common reel diameter RD. Each reel **42** may have an associated motor to mechanically extend and retract the hose **40**.

As shown in an isolated view in FIG. **3**, the reels **42** are mounted on a support rack **42***a*. In this example, the support rack **42***a* is configured with upper and lower rows of reels **42**. For instance, a ratio of the number of reels **42** in the upper row to a number of reels in the lower row on the support rack **42***a* is 1:1. As an example, each row has five reels **42** such that each support rack **42***a* provides ten reels **42** and thus ten hoses **40**. There are two support racks **42***a* (FIG. **2**) arranged on opposed sides of the first compartment **24**. The reels **42** are thus likewise arranged on opposed sides of the first compartment **24** in the trailer **22**. The station **20** therefore can provide twenty hoses **40** in the illustrated arrangement, with ten hoses **40** deployable on each side of the station **20**. For instance, the first group of ten hoses **40** on one side of the compartment **24** are deployable from the first trailer side wall W**1** and the second group of ten hoses **40** are deployable from the second trailer side wall W**2**. As will be appreciated, fewer or additional reels and hoses may be used in alternative examples.

An aisle walkway (A) runs down the middle of the trailer **22**. In this example, the aisle walkway A runs between the support racks **42***a* from an outside door E to the inside door **28***b*. Most typically, the aisle walkway A will include the space or volume through which workers walk to operate the station **20**. The aisle walkway A has an aisle width A**1**. As an example, the aisle width A**1** is the largest constant width walkway down the trailer **22** adjacent at least the reels **42** that is not intruded upon by affixed equipment in the trailer **22**, such as the reels **42**, support racks **42***a*, other support structures, etc.

The size of the aisle width A can contribute to reducing the potential for undesired incidents. For instance, there may be two or three or more workers that walk up and down the aisle walkway A in connection with their job duties. The workers need space to potentially pass by each other in the aisle walkway A and carry equipment through the aisle walkway A without bumping into each other or into equipment affixed in the trailer **22**.

The aisle width A**1**, however, is not unlimited and is subject to space availability and other factors relating to the performance of the station **20**. For instance, the reel diameter RD relates to the lengths of hoses that can be stored on the reels **42**. A relatively large reel diameter RD can accommodate a long hose winding, while a relatively smaller reel diameter RD would only accommodate a shorter hose winding. Longer hoses potentially provide greater access to equipment on a site that is located farther from the station, but longer hoses require more space in a station than shorter hoses due to the size of the reel needed to wind the longer hose. There is thus a multi-faceted interplay between the size and number of reels, arrangement of reels, and size/location of an aisle.

In a middle aisle arrangement as with the aisle walkway A, the aisle width A**1** is greater than the reel diameter RD by a factor of at least 1.3. In a further example, the aisle width A**1** is greater than the reel diameter RD by a factor of at least 1.5, and the trailer width TW is no greater than about 96 inches.

Additionally or alternatively, in a further example, a ratio of the trailer width TW to the aisle width A**1** is no greater than 5. In a further example, the ratio of the trailer width TW to the aisle width A**1** is also greater than 2. In a further example, the ratio of the trailer width TW to the aisle width A**1** is also equal to or less than 4. In a further example, the trailer width TW is no greater than about 96 inches and the ratio of the trailer width TW to the aisle width A**1** is greater than 2 and no greater than 5. In a further example of any of the examples herein, the aisle width A**1** is between about 30 inches and about 38 inches. The parameters above provide good station performance in combination with good packaging in the trailer **22** and good aisle size for worker movement.

As shown in a representative example in FIG. **4**, each hose **40** is connected to a respective one of the reels **42** and a respective one of a plurality of control valves **44**. For example, a secondary fuel line **46** leads from the manifold **38** to the reel **42**. The control valve **44** is in the secondary fuel line **46**. The control valve **44** is movable between open and closed positions to selectively permit fuel flow from the manifold **38** to the reel **42** and the hose **40**. For example, the control valve **44** is a powered valve, such as a solenoid valve.

In the illustrated example, the first compartment **24** also includes a sensor support rack **48**. The sensor support rack **48** holds integrated fuel cap sensors **50** (when not in use), or at least portions thereof. When in use, each integrated fuel cap sensor **50** is temporarily affixed to a piece of equipment (i.e., the fuel tank of the equipment) that is subject to the hot-refueling operation. Each hose **40** may include a connector end **40***a* and each integrated fuel cap sensor **50** may have a corresponding mating connector to facilitate rapid connection and disconnection of the hose **40** with the integrated fuel cap sensor **50**. For example, the connector end **40***a* and mating connector on the integrated fuel cap sensor **50** form a hydraulic quick-connect.

At least the control valves **44**, pump or pumps **30**, sensor or sensors **36***b*, and register **34** are in communication with a controller **52** located in the second compartment **26**. As an example, the controller **52** includes software, hardware, or both that is configured to carry out any of the functions described herein. In one further example, the controller **52** includes a programmable logic controller with a touch-screen for user input and display of status data. For example, the screen may simultaneously show multiple fluid levels of the equipment that is being serviced.

When in operation, the integrated fuel cap sensors **50** are mounted on respective fuel tanks of the pieces of equipment that are subject to the hot-refueling operation. The hoses **40** are connected to the respective integrated fuel cap sensors **50**. Each integrated fuel cap sensor **50** generates signals that are indicative of the fuel level in the fuel tank of the piece of equipment on which the integrated fuel cap sensor **50** is mounted. The signals are communicated to the controller **52**.

The controller **52** interprets the signals and determines the fuel level for each fuel tank of each piece of equipment. In response to a fuel level that falls below a lower threshold, the controller **52** opens the control valve **44** associated with the hose **40** to that fuel tank and activates the pump or pumps **30**. The pump or pumps **30** provide fuel flow into the manifolds **38** and through the open control valve **44** and reel **42** such that fuel is provided through the respective hose **40** and integrated fuel cap sensor **50** into the fuel tank. The lower threshold may correspond to an empty fuel level of the fuel tank, but more typically the lower threshold will be a level above the empty level to reduce the potential that the

equipment completely runs out of fuel and shuts down. The controller **52** can also be programmed with a failsafe measure related to the operation of the fuel cap sensors **50**. As an example, once a control valve **44** is open, if the controller **52** does not detect a change in fuel level from the fuel cap sensor **50** associated with the control valve **44** within a preset time period, the controller **52** shuts the pump **30** off and closes the control valve **44**. Thus, if a hose **40** were to rupture, spillage of fuel is limited to the volume of fuel in the hose **40**. For instance, the preset time period may be three seconds, six seconds, ten seconds, or fifteen seconds, which may limit spillage to approximately fifteen gallons for a given size of hose.

The controller **52** also determines when the fuel level in the fuel tank reaches an upper threshold. The upper threshold may correspond to a full fuel level of the fuel tank, but more typically the upper threshold will be a level below the full level to reduce the potential for overflow. In response to reaching the upper threshold, the controller **52** closes the respective control valve **44** and ceases the pump or pumps **30**. If other control valves **44** are open or are to be opened, the pump or pumps **30** may remain on. The controller **52** can also be programmed with an electronic stop failsafe measure to prevent over-filling. As an example, once an upper threshold is reached on a first tank and the control valve **44** is closed, but the pump **30** is otherwise to remain on to fill other tanks, if the fuel level continues to rise in the first tank, the controller **52** shuts the pump **30** off.

Multiple control valves **44** may be open at one time, to provide fuel to multiple fuel tanks at one time. Alternatively, if there is demand for fuel from two or more fuel tanks, the controller **52** may sequentially open the control valves **44** such that the tanks are refueled sequentially. For instance, upon completion of refueling of one fuel tank, the controller **52** closes the control valve **44** of the hose **40** associated with that tank and then opens the next control valve **44** to begin refueling the next fuel tank. Sequential refueling may facilitate maintaining internal pressure in the manifold and fuel line **32** above a desired or preset pressure threshold to more rapidly deliver fuel. Similarly, the controller **52** may limit the number of control valves **44** that are open at any one instance in order to maintain the internal pressure in the manifold and fuel line **32** above a desired or preset threshold. The controller **52** may perform the functions above while in an automated operating mode. Additionally, the controller **52** may have a manual mode in which a user can control at least some functions through the PLC, such as starting and stopped the pump **30** and opening and closing control valves **44**. For example, manual mode may be used at the beginning of a job when initially filling tanks to levels at which the fuel cap sensors **50** can detect fuel and/or during a job if a fuel cap sensor **50** becomes inoperable. Of course, operating in manual mode may deactivate some automated functions, such as filling at the low threshold or stopping at the high threshold.

In addition to the use of the sensor signals to determine fuel level, or even as an alternative to use of the sensor signals, the refueling may be time-based. For instance, the fuel consumption of a given piece of equipment may be known such that the fuel tank reaches the lower threshold at known time intervals. The controller **52** is operable to refuel the fuel tank at the time intervals rather than on the basis of the sensor signals, although sensor signals may also be used to verify fuel level.

The controller **52** also tracks the amount of fuel provided to the fuel tanks. For instance, the register **34** precisely measures the amount of fuel provided from the pump or pumps **30**. As an example, the register **34** is an electronic register and has a resolution of about 0.1 gallons. The register **34** communicates measurement data to the controller **52**. The controller **52** can thus determine the total amount of fuel used to very precise levels. The controller **52** may also be configured to provide outputs of the total amount of fuel consumed. For instance, a user may program the controller **52** to provide outputs at desired intervals, such as by worker shifts or daily, weekly, or monthly periods. The outputs may also be used to generate invoices for the amount of fuel used. As an example, the controller **52** may provide a daily output of fuel use and trigger the generation of an invoice that corresponds to the daily fuel use, thereby enabling almost instantaneous invoicing.

In a further example, the integrated fuel cap sensors **50** are each hard-wired to the controller **52**. The term "hard-wired" or variations thereof refers to a wired connection between two components that serves for electronic communication there between, which here a sensor and a controller. The hard-wiring may facilitate providing more reliable signals from the integrated fuel cap sensors **50**. For instance, the many pieces of equipment, vehicles, workers, etc. at a site may communicate using wireless devices. The wireless signals may interfere with each other and, therefore, degrade communication reliability. Hard-wiring the integrated fuel cap sensors **50** to the controller **52** facilitates reduction in interference and thus enhances reliability.

In general, hard-wiring in a hot-refueling environment presents several challenges. For example, a site has many workers walking about and typically is located on rough terrain. Thus, as will be described below, each integrated fuel cap sensor **50** is hard-wired through the associated hose **40** to the controller **52**.

FIG. **5** illustrates a representative portion of one of the hoses **40** and, specifically, the end of the hose **40** that will be located at the fuel tank of the equipment being refueled. In this example, the hose **40** includes a connector **60** at the end for detachably connecting the hose **40** to the integrated fuel cap sensors **50**. The hose **40** is formed of a tube **62** and a sleeve **64** that circumscribes the tube **62**. As an example, the tube **62** may be a flexible elastomeric tube and the sleeve **64** may be a flexible fabric sleeve. The sleeve **64** is generally loosely arranged around the tube **62**, although the sleeve **64** may closely fit on the tube **62** to prevent substantial slipping of the sleeve **64** relative to the tube **62** during use and handling. Optionally, to further prevent slipping and/or to secure the sleeve **64**, bands may be tightened around the hose **40**. As an example, one or more steel or stainless steel bands can be provided at least near the ends of the hose **40**.

A plurality of sensor communication lines **66** (one shown) are routed with or in the respective hoses **40**. For instance, each line **66** may include a wire, a wire bundle, and/or multiple wires or wire bundles. In one further example, the line **66** is a low milli-amp intrinsic safety wiring, which serves as a protection feature for reducing the concern for operating electrical equipment in the presence of fuel by limiting the amount of thermal and electrical energy available for ignition. In this example, the line **66** is routed through the hose **40** between (radially) the tube **62** and the sleeve **64**. The sleeve **64** thus serves to secure and protect the line **66**, and the sleeve **64** may limit spill and spewing if there is a hose **40** rupture. In particular, since the line **66** is secured in the hose **40**, the line **66** does not present a tripping concern for workers. Moreover, in rough terrain environments where there are stones, sand, and other objects that could damage the line **66** if it were free, the sleeve **64** shields the line **66** from direct contact with such objects. In further

examples, the line **66** may be embedded or partially embedded in the tube **62** or the sleeve **64**.

In this example, the line **66** extends out from the end of the hose **40** and includes a connector **68** that is detachably connectable with a respective one of the integrated fuel cap sensors **50**. For example, FIG. **6** illustrates a representative example of one of the integrated fuel cap sensors **50**. The integrated fuel cap sensor **50** includes a cap portion **50***a* and a fluid level sensor portion **50***b*. The cap portion **50***a* is detachably connectable with a port of a fuel tank. The cap portion **50***a* includes a connector port **50***c*, which is detachably connectable with the connector **60** of the hose **40**. The sensor portion **50***b* includes a sensor **50***d* and a sensor port **50***e* that is detachably connectable with the connector **68** of the line **66**. The fuel cap sensor **50** may also include a vent port that attaches to a drain hose, to drain any overflow into a containment bucket and/or reduce air pressure build-up in a fuel tank. Thus, a user may first mount the cap portion **50***a* on the fuel tank of the equipment, followed by connecting the hose **40** to the port **50***c* and connecting the line **66** to the port **50***e*.

The sensor **50***d* may be any type of sensor that is capable of detecting fluid or fuel level in a tank. In one example, the sensor **50***d* is a guided wave radar sensor. A guided wave radar sensor may include a transmitter/sensor that emits radar waves, most typically radio frequency waves, down a probe. A sheath may be provided around the probe. For example, the sheath may be a metal alloy (e.g., stainless steel or aluminum) or polymer tube that surrounds the probe. One or more bushings may be provided between the probe and the sheath, to separate the probe from the sheath. The sheath shields the probe from contact by external objects, the walls of a fuel tank, or other components in a fuel tank, which might otherwise increase the potential for faulty sensor readings. The probe serves as a guide for the radar waves. The radar waves reflect off of the surface of the fuel and the reflected radar waves are received into the transmitter/sensor. A sensor controller determines the "time of flight" of the radar waves, i.e., how long it takes from emission of the radar waves for the radar waves to reflect back to the transmitter/sensor. Based on the time, the sensor controller, or the controller **52** if the sensor controller does not have the capability, determines the distance that the radar waves travel. A longer distance thus indicates a lower fuel level (farther away) and a shorter distance indicates a higher fuel level (closer).

The line **66** routes through the hose **40** and back to the reel **42** in the trailer **22**. For example, the line **66** is also routed or hard-wired through the reel **42** to the controller **52**. FIG. **7** illustrates a representative example of the routing in the reel **42**. In this example, the reel **42** includes a spindle **42***b* about which the reel is rotatable. The spindle **42***b* may be hollow, and the line **66** may be routed through the spindle **42***b*. The reel **42** may also include a connector **42***c* mounted thereon. The connector **42***c* receives the line **66** and serves as a port for connection with another line **66***a* to the controller **52**.

The lines **66***a* may converge to one or more communication junction blocks or "bricks" prior to the controller **52**. The communication junction blocks may serve to facilitate the relay of the signals back to the controller **52**. The communication junction blocks may alternatively or additionally serve to facilitate identification of the lines **66**, and thus the signals, with respect to which of the hoses a particular line **66** is associated with. For instance, a group of communication junction blocks may have unique identifiers and the lines **66** into a particular communication junction block may be associated with identifiers. A signal relayed into the controller **52** may thus be associated with the identifier of the communication junction blocks and a particular line **66** of that communication junction block in order to identify which hose the signal is to be associated with. The valves **44** may also communicate with the controller **52** in a similar manner through the communication junction blocks.

As illustrated in a further example in FIG. **8**, the station **20** may be further enhanced to reduce the potential for fluid or fuel escape. The trailer **22**, depicted here in phantom, includes a floor pan **80**. The floor pan **80** may be formed of metal, polymer, or combinations thereof and serves to reduce or prevent the escape of fluid or fuel from inside the trailer **22**. In comparison to a temporary, movable catch basin, the floor pan **80** is a permanent fixture in the trailer **22**, and may be structurally affixed in the trailer **22** by fasteners, adhesive, or the like.

As an example, the floor pan **80** includes a bottom **80***a* that joins sides **80***b* to define a container cavity **80***c*. For instance, the floor pan **80** lines the bottom portion of the trailer **22**. The bottom **80***a* and sides **80***b* seal the container cavity **80***c* such that any fluid or fuel that leaks in the trailer **22** is caught and contained in the floor pan **80**, to reduce the potential of spilling or leaking out from the trailer **22**. The floor pan **80** may line only the first compartment **24** or may line both the first and second compartments **24**/**26**. In alternative examples, the floor pan **80** may line only a portion of the trailer **22** where there is potential for leak or spill. Most typically, the floor pan **80** will cover a majority of the floor area of the trailer **22** or at least a majority of the first compartment **24**. In further examples, a ratio of the width of the floor pan **80** to the minimum height of the sides **80***b* is no less than 16 and may be up to about 50. In yet a further example, the cavity **80***c* of the floor pan **80** has a volume of approximately two-hundred gallons and the minimum height of the sides **80***b* is no less than two inches.

Optionally, the floor pan **80** may include one or more drain ports in the bottom **80***a*, sides **80***b*, or both, to permit controlled drainage of spilled fluid or fuel from the floor pan **80** into a catch container.

As can be appreciated from the examples herein, the station **20** permits continuous hot-refueling with enhanced reliability. While there might generally be a tendency to choose wireless sensor communication for convenience, a hard-wired approach mitigates the potential for signal interference that can arise with wireless. Moreover, by hard-wiring the sensors through the hoses to the controller, wired communication lines are protected from exposure and do not pose additional concerns for workers on a site. Additionally, the spatial layout of the station **20** permits enhanced station performance in combination with good packaging and aisle size for worker movement.

FIG. **9** illustrates a system **69** for remotely monitoring and/or managing at least one mobile distribution station **20** (A). It is to be appreciated that the system **69** may include additional mobile distribution stations, shown in phantom at **20** (B), **20** (C), and **20** (D) (collectively mobile distribution stations **20**), for example. The mobile distribution stations **20** may be located at a single work site or located across several different work sites S**1** and S**2**. Each mobile distribution station **20** is in communication with one or more servers **71** that are remotely located from the mobile distribution stations **20** and work sites S**1**/S**2**. In most implementations, the communication will be wireless.

The server **71** may include hardware, software, or both that is configured to perform the functions described herein.

The server **71** may also be in communication with one or more electronic devices **73**. The electronic device **73** is external of or remote from the mobile fuel distribution stations **20**. For example, the electronic device **73** may be, but is not limited to, a computer, such as a desktop or laptop computer, a cellular device, or tablet device. The electronic device **73** may communicate and interact in the system **69** via data connectivity, which may involve internet connectivity, cellular connectivity, software, mobile application, or combinations of these.

The electronic device **73** may include a display **73***a*, such as an electronic screen, that is configured to display the fuel operating parameter data of each of the mobile distribution stations **20**. As an example, the electronic device **73** may display in real-time the operating parameter data of each of the mobile distribution stations **20** in the system **69** to permit remote monitoring and management control of the mobile distribution stations **20**. For instance, the operating parameter data may include fuel temperature, fuel pressure, fuel flow, total amount of fuel distributed, operational settings (e.g., low and high fuel level thresholds), or other parameters.

The server **71** may also be in communication with one or more cloud-based devices **75**. The cloud-based device **75** may include one or more servers and a memory for communicating with and storing information from the server **71**.

The server **71** is configured to communicate with the mobile distribution stations **20**. Most typically, the server **71** will communicate with the controller **52** of the mobile distribution station **20**. In this regard, the controller **52** of each mobile distribution station **20** may be include hardware, software, or both that is configured for external communication with the server **71**. For example, each controller **52** may communicate and interact in the system **69** via data connectivity, which may involve internet connectivity, cellular connectivity, software, mobile application, or combinations of these.

The server **71** is configured to receive operating parameter data from the mobile distribution stations **20**. The operating parameter data may include or represent physical measurements of operating conditions of the mobile distribution station **20**, status information of the mobile distribution station **20**, setting information of the mobile distribution station **20**, or other information associated with control or management of the operation of the mobile distribution station **20**.

For example, the server **71** utilizes the information to monitor and auto-manage the mobile distribution station **20**. The monitoring and auto-management may be for purposes of identifying potential risk conditions that may require shutdown or alert, purposes of intelligently enhancing operation, or purposes of reading fuel or fluid levels in real-time via the sensors **50**. As an example, the server **71** may utilize the information to monitor or display fuel or fluid levels, or determine whether the fuel operating parameter data is within a preset limit and send a control action in response to the operating parameter data being outside the preset limit. As will described in further detail below, the control action may be a shutdown instruction to the mobile fuel distribution stations **20**, an adjustment instruction to the mobile fuel distribution stations **20**, or an alert to the electronic device **73**.

Although a combination of features is shown in the illustrated examples, not all of them need to be combined to realize the benefits of various embodiments of this disclosure. In other words, a system designed according to an embodiment of this disclosure will not necessarily include all of the features shown in any one of the Figures or all of the portions schematically shown in the Figures. Moreover, selected features of one example embodiment may be combined with selected features of other example embodiments.

The preceding description is exemplary rather than limiting in nature. Variations and modifications to the disclosed examples may become apparent to those skilled in the art that do not necessarily depart from this disclosure. The scope of legal protection given to this disclosure can only be determined by studying the following claims.

What is claimed is:

1. A distribution station comprising:

a container including first and second opposed side walls that join first and second opposed end walls;

a pump in the container;

first and second manifolds in the container and fluidly connected with the pump;

a plurality of reels in the container;

a plurality of hoses, each said hose connected with a different one of the reels, wherein a portion of the reels are connected to be fed from the first manifold and another portion of the reels are connected to be fed from the second manifold;

a plurality of valves in the container, each said valve situated between one of the first or second manifolds and a respective different one of the reels;

a plurality of fluid level sensors, each said fluid level sensor being associated with a different one of the hoses; and

a controller configured to individually open and close the valves responsive to the fluid level sensors.

2. The distribution station as recited in claim **1**, wherein the reels are arranged on first and second opposed sides in the container.

3. The distribution station as recited in claim **2**, further comprising an aisle walkway down the middle of the container between the reels on the first and second opposed sides in the container.

4. The distribution station as recited in claim **3**, further comprising a floor pan in the container.

5. The distribution station as recited in claim **1**, wherein the reels on each of the first and second opposed sides are arranged in upper and lower rows of reels.

6. The distribution station as recited in claim **1**, further comprising a register configured to measure an amount of fluid from the pump.

7. The distribution station as recited in claim **6**, wherein the register is in communication with the controller.

8. The distribution station as recited in claim **7**, wherein the controller is configured to track the amount of fluid provided from the pump over a selected time interval.

9. The distribution station as recited in claim **8**, wherein the controller is configured to trigger generation of an invoice for the amount of fluid.

10. The distribution station as recited in claim **8**, wherein the register is an electronic register that has a resolution of about 0.1 gallons.

11. A distribution station comprising:

a container including first and second opposed side walls that join first and second opposed end walls;

at least one pump in the container;

at least one manifold in the container and fluidly connected with the at least one pump;

a plurality of reels in the container, each said reel individually connected with the at least one manifold;

a plurality of hoses, each said hose connected with a different one of the reels;

a plurality of valves in the container, each said valve situated between the at least one manifold and a respective different one of the reels;

a plurality of fluid level sensors, each said fluid level sensor connectable to an end of a different one of the hoses; and

a controller configured to individually open and close the valves responsive to the fluid level sensors.

12. The distribution station as recited in claim **11**, wherein the at least one pump includes two pumps.

13. The distribution station as recited in claim **12**, wherein the two pumps are arranged in fluid series.

14. The distribution station as recited in claim **11**, further comprising a register configured to measure an amount of fluid from the pump.

15. The distribution station as recited in claim **14**, wherein the register is in communication with the controller.

16. The distribution station as recited in claim **15**, wherein the controller is configured to track the amount of fluid provided from the pump over a selected time interval.

17. The distribution station as recited in claim **16**, wherein the controller is configured to trigger generation of an invoice for the amount of fluid.

18. The distribution station as recited in claim **16**, wherein the register is an electronic register that has a resolution of about 0.1 gallons.

19. A distribution station comprising:

a container including first and second opposed side walls that join first and second opposed end walls;

at least one pump in the container;

at least one manifold in the container and fluidly connected with the at least one pump;

a register between the at least one pump and the at least one manifold;

a plurality of reels in the container and connected with the at least one manifold;

a plurality of hoses, each said hose connected with a different one of the reels;

a plurality of valves in the container, each said valve situated between the at least one manifold and a respective different one of the reels;

a plurality of fluid level sensors, each said fluid level sensor being associated with a different one of the hoses; and

a controller configured to individually open and close the valves responsive to the fluid level sensors.

20. The distribution station as recited in claim **19**, wherein the register is configured to generate measurement data representative of an amount of fluid provided from the at least one pump, and the register is in communication with the controller to send the measurement data to the controller.

* * * * *

EXHIBIT 6

Claim Chart for Infringement of Claim 1 of U.S. Patent No. 10,494,251

All images and quotes are sourced from the publicly available brochure available at http://comanchegas.com/files/2020/09/Comanche-AFS-Brochure.pdf. This claim chart is based on publicly available information and is not an exhaustive statement of all the relevant facts and law.

Term of Claim 1 of U.S. Patent No. 10,494,251	Accused Product
A distribution station comprising:	"The AFS dispenses dyed diesel to the pumps, pump down units, and blenders."
a mobile trailer;	

a pump on the mobile trailer;	"The fuel tank sensors utilize wireless telemetry to communicate with the AFS that the tank has reached the appropriate fill level. When the tank reaches 20% fuel capacity, the AFS delivers dyed diesel by using two one-horsepower motors through the fuel line."
first and second manifolds on the mobile trailer and fluidly connected with the pump;	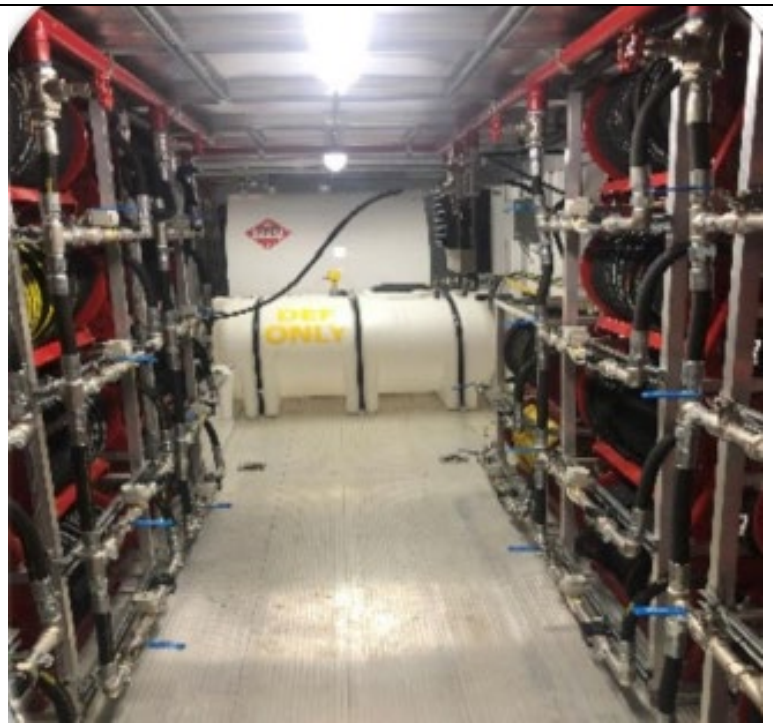 "The fuel tank sensors utilize wireless telemetry to communicate with the AFS that the tank has reached the appropriate fill level. When the tank reaches 20% fuel capacity, the AFS delivers dyed diesel by using two one-horsepower motors through the fuel line."

a plurality of reels on the mobile trailer;	 "The AFS has 27 hose reels per unit to accommodate horsepower." "The dyed diesel fuel is dispersed through an electrical ball valve, located on each reel inside the AFS. Each reel is equipped with a flow meter for frac pump fuel management."

a plurality of hoses, each said hose connected with a different one of the reels, wherein a portion of the reels are connected to be fed from the first manifold and another portion of the reels are connected to be fed from the second manifold;	 "The AFS has 27 hose reels per unit to accommodate horsepower"

a plurality of valves on the mobile trailer, each said valve situated between one of the first or second manifolds and a respective different one of the reels;	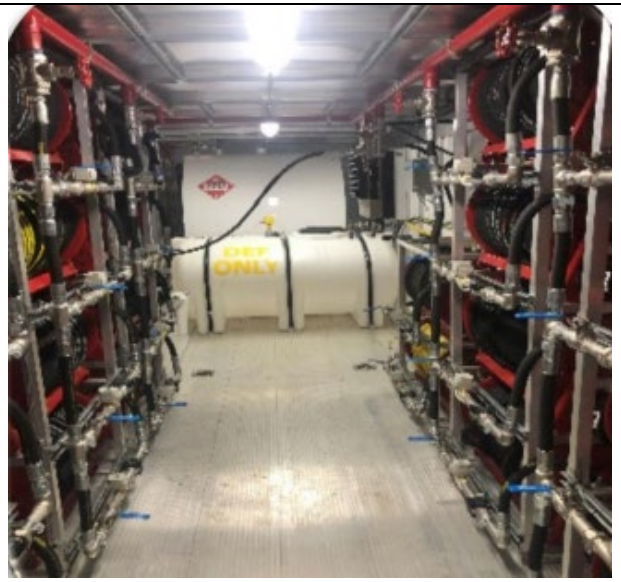 "The fuel tank sensors utilize wireless telemetry to communicate with the AFS that the tank has reached the appropriate fill level. When the tank reaches 20% fuel capacity, the AFS delivers dyed diesel by using two one-horsepower motors through the fuel line. When the tank depth achieves 70% fuel capacity, the AFS closes the electric ball valve and stops dispensing fuel."
a plurality of fluid level sensors, each said fluid level sensor being associated with a different one of the hoses; and	"The fuel tank sensors utilize wireless telemetry to communicate with the AFS that the tank has reached the appropriate fill level. When the tank reaches 20% fuel capacity, the AFS delivers dyed diesel by using two one-horsepower motors through the fuel line. When the tank depth achieves 70% fuel capacity, the AFS closes the electric ball valve and stops dispensing fuel."

a controller configured to individually open and close the valves responsive to the fluid level sensors.	"The Comanche Gas Solutions Automated Fueling System (AFS) dispenses dyed diesel automatically via a PLC-driven system to pumping equipment"

JS 44 (Rev. 09/19)

CIVIL COVER SHEET

The JS 44 civil cover sheet and the information contained herein neither replace nor supplement the filing and service of pleadings or other papers as required by law, except as provided by local rules of court. This form, approved by the Judicial Conference of the United States in September 1974, is required for the use of the Clerk of Court for the purpose of initiating the civil docket sheet. *(SEE INSTRUCTIONS ON NEXT PAGE OF THIS FORM.)*

I. (a) PLAINTIFFS

FLUID AUTOMATION STATION, LLC

(b) County of Residence of First Listed Plaintiff _____
(EXCEPT IN U.S. PLAINTIFF CASES)

(c) Attorneys *(Firm Name, Address, and Telephone Number)*
Gellert Scali Busenkell & Brown, LLC, 1201 N. Orange St., 3rd Fl., Wilmington DE 19801, Charles J. Brown, III, Esq.

DEFENDANTS

COMANCHE GAS SOLUTIONS, LLC

County of Residence of First Listed Defendant New Castle
(IN U.S. PLAINTIFF CASES ONLY)

NOTE: IN LAND CONDEMNATION CASES, USE THE LOCATION OF THE TRACT OF LAND INVOLVED.

Attorneys *(If Known)*

II. BASIS OF JURISDICTION *(Place an "X" in One Box Only)*

- ❒ 1 U.S. Government Plaintiff
- ☒ 3 Federal Question *(U.S. Government Not a Party)*
- ❒ 2 U.S. Government Defendant
- ❒ 4 Diversity *(Indicate Citizenship of Parties in Item III)*

III. CITIZENSHIP OF PRINCIPAL PARTIES *(Place an "X" in One Box for Plaintiff and One Box for Defendant)*
(For Diversity Cases Only)

	PTF	DEF		PTF	DEF
Citizen of This State	❒ 1	❒ 1	Incorporated *or* Principal Place of Business In This State	❒ 4	☒ 4
Citizen of Another State	❒ 2	❒ 2	Incorporated *and* Principal Place of Business In Another State	☒ 5	❒ 5
Citizen or Subject of a Foreign Country	❒ 3	❒ 3	Foreign Nation	❒ 6	❒ 6

IV. NATURE OF SUIT *(Place an "X" in One Box Only)*

Click here for: Nature of Suit Code Descriptions.

CONTRACT
- ❒ 110 Insurance
- ❒ 120 Marine
- ❒ 130 Miller Act
- ❒ 140 Negotiable Instrument
- ❒ 150 Recovery of Overpayment & Enforcement of Judgment
- ❒ 151 Medicare Act
- ❒ 152 Recovery of Defaulted Student Loans (Excludes Veterans)
- ❒ 153 Recovery of Overpayment of Veteran's Benefits
- ❒ 160 Stockholders' Suits
- ❒ 190 Other Contract
- ❒ 195 Contract Product Liability
- ❒ 196 Franchise

REAL PROPERTY
- ❒ 210 Land Condemnation
- ❒ 220 Foreclosure
- ❒ 230 Rent Lease & Ejectment
- ❒ 240 Torts to Land
- ❒ 245 Tort Product Liability
- ❒ 290 All Other Real Property

TORTS

PERSONAL INJURY
- ❒ 310 Airplane
- ❒ 315 Airplane Product Liability
- ❒ 320 Assault, Libel & Slander
- ❒ 330 Federal Employers' Liability
- ❒ 340 Marine
- ❒ 345 Marine Product Liability
- ❒ 350 Motor Vehicle
- ❒ 355 Motor Vehicle Product Liability
- ❒ 360 Other Personal Injury
- ❒ 362 Personal Injury - Medical Malpractice

PERSONAL INJURY
- ❒ 365 Personal Injury - Product Liability
- ❒ 367 Health Care/ Pharmaceutical Personal Injury Product Liability
- ❒ 368 Asbestos Personal Injury Product Liability

PERSONAL PROPERTY
- ❒ 370 Other Fraud
- ❒ 371 Truth in Lending
- ❒ 380 Other Personal Property Damage
- ❒ 385 Property Damage Product Liability

CIVIL RIGHTS
- ❒ 440 Other Civil Rights
- ❒ 441 Voting
- ❒ 442 Employment
- ❒ 443 Housing/ Accommodations
- ❒ 445 Amer. w/Disabilities - Employment
- ❒ 446 Amer. w/Disabilities - Other
- ❒ 448 Education

PRISONER PETITIONS

Habeas Corpus:
- ❒ 463 Alien Detainee
- ❒ 510 Motions to Vacate Sentence
- ❒ 530 General
- ❒ 535 Death Penalty

Other:
- ❒ 540 Mandamus & Other
- ❒ 550 Civil Rights
- ❒ 555 Prison Condition
- ❒ 560 Civil Detainee - Conditions of Confinement

FORFEITURE/PENALTY
- ❒ 625 Drug Related Seizure of Property 21 USC 881
- ❒ 690 Other

LABOR
- ❒ 710 Fair Labor Standards Act
- ❒ 720 Labor/Management Relations
- ❒ 740 Railway Labor Act
- ❒ 751 Family and Medical Leave Act
- ❒ 790 Other Labor Litigation
- ❒ 791 Employee Retirement Income Security Act

IMMIGRATION
- ❒ 462 Naturalization Application
- ❒ 465 Other Immigration Actions

BANKRUPTCY
- ❒ 422 Appeal 28 USC 158
- ❒ 423 Withdrawal 28 USC 157

PROPERTY RIGHTS
- ❒ 820 Copyrights
- ☒ 830 Patent
- ❒ 835 Patent - Abbreviated New Drug Application
- ❒ 840 Trademark

SOCIAL SECURITY
- ❒ 861 HIA (1395ff)
- ❒ 862 Black Lung (923)
- ❒ 863 DIWC/DIWW (405(g))
- ❒ 864 SSID Title XVI
- ❒ 865 RSI (405(g))

FEDERAL TAX SUITS
- ❒ 870 Taxes (U.S. Plaintiff or Defendant)
- ❒ 871 IRS—Third Party 26 USC 7609

OTHER STATUTES
- ❒ 375 False Claims Act
- ❒ 376 Qui Tam (31 USC 3729(a))
- ❒ 400 State Reapportionment
- ❒ 410 Antitrust
- ❒ 430 Banks and Banking
- ❒ 450 Commerce
- ❒ 460 Deportation
- ❒ 470 Racketeer Influenced and Corrupt Organizations
- ❒ 480 Consumer Credit (15 USC 1681 or 1692)
- ❒ 485 Telephone Consumer Protection Act
- ❒ 490 Cable/Sat TV
- ❒ 850 Securities/Commodities/ Exchange
- ❒ 890 Other Statutory Actions
- ❒ 891 Agricultural Acts
- ❒ 893 Environmental Matters
- ❒ 895 Freedom of Information Act
- ❒ 896 Arbitration
- ❒ 899 Administrative Procedure Act/Review or Appeal of Agency Decision
- ❒ 950 Constitutionality of State Statutes

V. ORIGIN *(Place an "X" in One Box Only)*

- ☒ 1 Original Proceeding
- ❒ 2 Removed from State Court
- ❒ 3 Remanded from Appellate Court
- ❒ 4 Reinstated or Reopened
- ❒ 5 Transferred from Another District *(specify)*
- ❒ 6 Multidistrict Litigation - Transfer
- ❒ 8 Multidistrict Litigation - Direct File

VI. CAUSE OF ACTION

Cite the U.S. Civil Statute under which you are filing ***(Do not cite jurisdictional statutes unless diversity)***:
35 U.S.C. § 284

Brief description of cause:
Defendant has infringed upon Plaintiff's patents by selling in the United States its automated fueling system.

VII. REQUESTED IN COMPLAINT:

❒ CHECK IF THIS IS A **CLASS ACTION** UNDER RULE 23, F.R.Cv.P.

DEMAND $

CHECK YES only if demanded in complaint:
JURY DEMAND: ☒ Yes ❒ No

VIII. RELATED CASE(S) IF ANY

(See instructions): JUDGE _____ DOCKET NUMBER _____

DATE
07/09/2021

SIGNATURE OF ATTORNEY OF RECORD
/s/ Charles J. Brown, III (DE 3368)

FOR OFFICE USE ONLY

RECEIPT # _____ AMOUNT _____ APPLYING IFP _____ JUDGE _____ MAG. JUDGE _____