IN THE UNITED STATES DISTRICT COURT
FOR THE WESTERN DISTRICT OF TEXAS
AUSTIN DIVISION

FUEL AUTOMATION STATION, LLC,	§	
	§	Civil Action No. 1:22-cv-00801
Plaintiff,	§	
	§	
v.	§	
	§	**JURY TRIAL DEMANDED**
PERMIAN GLOBAL, INC., AND MANTICORE FUELS, LLC,	§	
	§	
Defendants.	§	
	§	

COMPLAINT FOR PATENT INFRINGEMENT

This is an action for patent infringement in which Plaintiff Fuel Automation Station, LLC ("FAS") complains against Defendants Permian Global Inc. and Manticore Fuels, LLC ("Defendants") and alleges as follows:

PARTIES

1. FAS is a limited liability company organized and existing under the laws of the State of Michigan, with a principal office at 24501 Ecorse Road, Taylor, Michigan, 48180.

2. Permian Global Inc. is a corporation organized and existing under the laws of the State of Texas with a principal place of business at 1113 Dayton Rd Midland, Texas 79706-3806

3. Manticore Fuels, LLC is a limited liability company organized and existing under the laws of the State of Texas with a principal place of business at 2419 W Murphy St., Odessa, Texas 79763-4804.

JURISDICTION AND VENUE

4. This Court has original subject matter jurisdiction over the claims in this action

pursuant to 28 U.S.C. § 1331 (federal question), § 1332 (diversity), and § 1338 (patents).

5. Defendants are subject to personal jurisdiction in this Court because Defendants are incorporated and organized in Texas and have their principal places of business in Texas.

6. Venue is proper in this judicial district as to Defendants under 28 U.S.C. § 1391(b)(1) and (c)(2) and 28 U.S.C. § 1400(b).

BACKGROUND

7. FAS manufactures and provides services related to an automated frac fuel delivery system known as the Fuel Automation Station ("FAS Equipment").

8. The FAS Equipment is engineered to fuel multiple pieces of fracking equipment simultaneously, boosting operational efficiency while eliminating spills, hazards and downtime.

9. FAS protected its technology by filing patent applications, resulting in the issuance of numerous patents related to this technology.

10. FAS commercializes products that practice the inventions claimed in the Asserted Patents (defined below) by way of the FAS Equipment.

11. Defendants are competitors of FAS and are also in the business of providing services related to automated frac fuel delivery systems, as marketed on their websites:

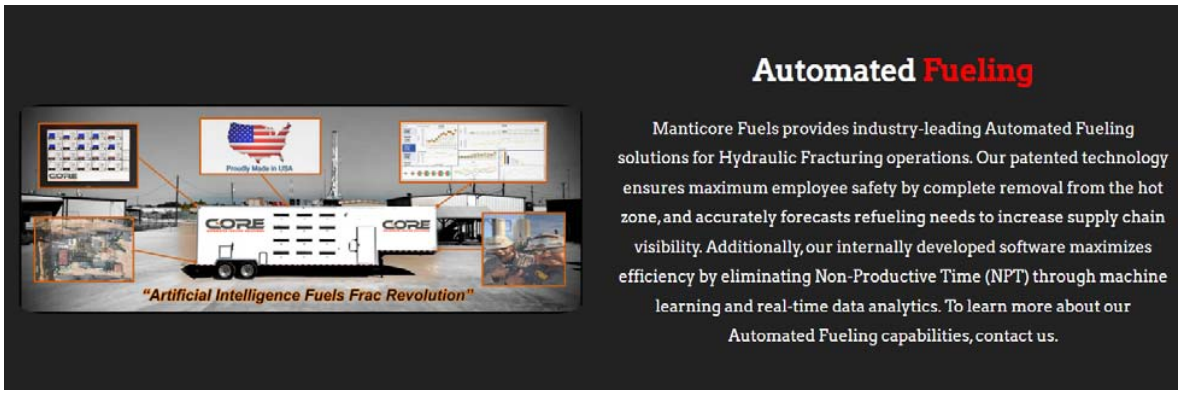

https://manticorefuels.com/services.html, Exhibit 1

The most advanced diesel automation technology available.

CORE's custom-built, fully automated fueling units are tailor-made to client needs and specifications. We design and bring the most advanced diesel automation technology to the market, including:

- 26+ custom-built heavy-duty motorized hose reels with over 450 feet of capacity, dynamic flow rate modulation and predictive fuel consumption technology
- 1,500-gallon clear fuel cell with gauge panels and reinforced seams
- Bulk fuel storage (over 21,000-gallon capacity), including a patent pending piping system that prevents manual pull-off and fuel contamination issues
- Proprietary fuel valves that avoid clogging and spills, enhance pump performance and eliminate Non-Productive Time (NPT)

https://corefueling.com/our-solutions/automated-fueling/, Exhibit 2

12. These websites each market the CORE Automated Fueling Solution, which, on information and belief, is made, used, sold, and offered for sale in the United States by Defendants.

13. The CORE Automated Fueling Solution includes, among other things, a mobile trailer; a pump on the mobile trailer; a manifold on the mobile trailer and connected with the pump; a plurality of reels on the mobile trailer; a plurality of flow passages, each flow passage being connected to the manifold and running through a respective one of the reels; a plurality of hoses, each hose being connected with a respective one of the flow passages via a respective one of the reels; a plurality of valves on the mobile trailer, each valve situated between the manifold and a respective different one of the reels and being operable to control fluid flow through a respective one of the flow passages; a plurality of fluid level sensors, each fluid level sensor being connected or connectable with a respective different one of the hoses; and a controller configured to operate the valves responsive to fluid level thresholds to control fluid flow to the hoses.

14. The CORE Automated Fueling Solution includes, among other things, a container including first and second opposed side walls that join first and second opposed end walls; a pump in the container; first and second manifolds in the container and fluidly connected with the pump;

a plurality of reels in the container; a plurality of hoses, each hose connected with a different one of the reels, wherein a portion of the reels are connected to be fed from the first manifold and another portion of the reels are connected to be fed from the second manifold; a plurality of valves in the container, each valve situated between one of the first or second manifolds and a respective different one of the reels; a plurality of fluid level sensors, each fluid level sensor being associated with a different one of the hoses; and a controller configured to individually open and close the valves responsive to the fluid level sensors.

15. The CORE Automated Fueling Solution includes, among other things, a mobile trailer; a pump on the mobile trailer; first and second manifolds on the mobile trailer and fluidly connected with the pump; a plurality of reels on the mobile trailer; a plurality of hoses connected, respectively, with the reels, wherein a portion of the reels are connected with the first manifold and another portion of the reels are connected with the second manifold; a plurality of valves on the mobile trailer, each of the valves situated between one of the first or second manifolds and a respective different one of the hoses; and a plurality of fluid level sensors, each of the fluid level sensors being associated a respective different one of the hoses, wherein the reels are arranged on first and second opposed sides in the mobile trailer, with an aisle walkway down the middle of the mobile trailer.

16. Manticore Fuels, LLC provides diesel and related fueling solutions to drilling operators at least throughout West Texas, offering on site services on a 24/7 basis.

17. On July 19, 2022, FAS sent to each of the Defendants a letter demanding Defendants to cease using without permission the inventions set forth in these automated fueling system patents: U.S. Patent Nos. 10,815,118; 10,974,955; and 9,586,805 ("the Asserted Patents"). The letters are attached as Exhibit 3.

18. Along with each letter, FAS sent to each Defendant a claim chart that compared certain claims in the Asserted Patents with the CORE automated fueling system. (Exhibit 3). FAS maintains that Defendants infringe the Asserted Patents at least for the reasons set forth in those claim charts.

19. Defendants knew of the Asserted Patents at least as of the date that they received their July 19, 2022 letters.

20. Permian Global Inc. submitted an Information Disclosure Statement to the United States Patent and Trademark Office on December 26, 2019 citing FAS's U.S. Patent No. 9,586,805 ("the '805 Patent").

21. Permian Global Inc. knew of the '805 patent at least as of December 26, 2019.

22. The '955 Patent is in the same patent family as the '805 patent.

23. In each letter FAS sent to Defendants, FAS asked for a substantive response by August 1, 2022.

24. Neither Defendant provided a substantive response to the letter by August 1, 2022.

25. Notwithstanding Defendants' knowledge of the Asserted Patents, Defendants have intentionally and continued their infringement of the Asserted Patents.

26. Permian Global Inc. represented to the United States Patent and Trademark Office in a trademark application for its CORE Automated Fueling Solutions trademark that it has used the CORE Automated Fueling Solutions trademark in connection with the following goods and services since January 1, 2019:

- Fuel dispensing pumps for service stations; High-pressure pumps for use in oil or gas well hydraulic fracturing operations; Skid-mounted oil and natural gas extracting and processing machines, namely, fuel pumps, flow meters, motorized reels, fuel hoses, PLC panel, electric wiring, wireless volume IOT sensors, tank level monitoring devices, fuel valves, solenoid valves, 35kw diesel Generator.

- Apparatus for testing gas, liquids and solids; Fuel pump testers; Power controllers for fuel dispenser, automated fuel dispensing technology, PLC control panel, power controllers, electric wiring, 35kw diesel generator, auto switch on-off valves.

- Providing a website featuring non-downloadable software for cloud-based platform streamlines the delivery of the industry's most accurate time-series and oilfield data directly to your laptop, tablet or smartphone. Cloud-based technology captures real-time data related to fuel transfer consumption and analyzes tanks' fuel level, flow rate modulation by stage, fleet and individual asset tracking.

27. Permian Global Inc. further provided a Specimen with its trademark application to support its alleged use of the trademark, and that Specimen is attached as Exhibit 4, showing the same CORE Automated Fueling Solution that Defendants market on their websites.

THE ASSERTED PATENTS

28. FAS is the assignee of a number of patents relating to automated fueling for fracturing systems, including the Asserted Patents.

29. On October 27, 2020, the United States Patent and Trademark Office duly and lawfully issued United States Patent No. 10,815,118 ("the '118 patent"), entitled "Mobile Distribution Station Having Sensor Communication Lines Routed With Hoses." A true and correct copy of the '118 patent is attached hereto as Exhibit 5.

30. The '118 patent names Ricky Dean Shock as the inventor.

31. FAS is the owner by assignment of all right, title and interest in the '118 patent.

32. On April 13, 2021, the United States Patent and Trademark Office duly and lawfully issued United States Patent No. 10,974,955 ("the '955 patent"), entitled "Mobile Distribution Station For Fluid Dispensing." A true and correct copy of the '955 patent is attached hereto as Exhibit 6.

33. The '955 patent names Ricky Dean Shock as the inventor.

34. FAS is the owner by assignment of all right, title and interest in the '955 patent.

35. On March 7, 2017, the United States Patent and Trademark Office duly and lawfully issued the ’805 Patent, entitled “Mobile Distribution Station With Aisle Walkway.” A true and correct copy of the ’805 patent is attached hereto as Exhibit 7.

36. The ’805 Patent names Ricky Dean Shock as the inventor.

37. FAS is the owner by assignment of all right, title and interest in the ’805 patent.

COUNT I
(DIRECT INFRINGEMENT OF U.S. PATENT NO. 10,815,118)

38. FAS incorporates by reference all of the preceding paragraphs as though fully set forth herein.

39. Defendants have directly infringed, literally or under the doctrine of equivalents, at least claim 1 of the ’118 patent by making, using, selling, offering to sell and/or importing into the United States, without authority, the CORE Automated Fueling Solution.

40. An exemplary claim chart based upon publicly available information illustrating how the CORE Automated Fueling Solution meets each and every limitation of claim 1 of the ’118 patent is attached, *see* Exhibit 3, pp. 59, 124.

COUNT II
(DIRECT INFRINGEMENT OF U.S. PATENT NO. 10,974,955)

41. FAS incorporates by reference all of the preceding paragraphs as though fully set forth herein.

42. Defendants have directly infringed, literally or under the doctrine of equivalents, at least claim 1 of the ’955 patent by making, using, selling, offering to sell and/or importing into the United States, without authority, the CORE Automated Fueling Solution.

43. An exemplary claim chart based upon publicly available information illustrating how the CORE Automated Fueling Solution meets each and every limitation of claim 1 of the ’955

patent is attached, *see* Exhibit 3, pp. 61, 126.

COUNT III
(DIRECT INFRINGEMENT OF U.S. PATENT NO. 9,586,805)

44. FAS incorporates by reference all of the preceding paragraphs as though fully set forth herein.

45. Defendants have directly infringed, literally or under the doctrine of equivalents, at least claim 1 of the ’805 patent by making, using, selling, offering to sell and/or importing into the United States, without authority, the CORE Automated Fueling Solution.

46. An exemplary claim chart based upon publicly available information illustrating how the CORE Automated Fueling Solution meets each and every limitation of claim 1 of the ’805 patent is attached, *see* Exhibit 3, pp. 64, 129.

DEMAND FOR JURY TRIAL

47. FAS requests a trial by jury on all claims and issues triable by jury.

PRAYER FOR RELIEF

FAS and Defendants are competitors. FAS has suffered substantial damages and will suffer severe and irreparable harm as a result of Defendants’ infringement, unless that infringement is enjoined by this Court. The threatened injury to FAS outweighs any harm that an injunction may cause to Defendants. Injunctive relief would not disserve the public interest under these circumstances.

FAS requests that the Court enter judgment in its favor against Defendants and grant the following relief:

A. A declaration that Defendants have infringed one or more claims of the Asserted Patents;

B. A permanent injunction preventing Defendants, as well as its officers, directors, agents, servants, assigns, and those in active concert and participation with any of

them from infringing the Asserted Patents.

C. A ruling that this case be found exceptional under 35 U.S.C. § 285, and a judgment awarding FAS its reasonable attorneys' fees and costs incurred in prosecuting this action;

D. A judgment that requires Defendants to pay FAS damages under 35 U.S. C. 284, including supplemental damages for any continuing post-verdict infringement until the entry of final judgment, with an accounting as necessary;

E. A judgment that Defendants' infringement is willful and award FAS enhanced damages under 35 U.S.C. § 284, up to and including trebling FAS's damages, based on Defendants' willful infringement of the Asserted Patents.

F. A judgment and order requiring that in the event a permanent injunction preventing further acts of infringement is not granted, that Frac Shack be awarded a compulsory ongoing licensing fee;

G. A judgment awarding FAS costs under 28 U.S.C. § 1920; and,

H. Such other legal and equitable relief to which FAS is entitled or which the Court deems just and proper.

Dated: August 10, 2022

Respectfully Submitted,

By: */s/Eric H. Findlay*

Eric H. Findlay
Texas Bar No. 00789886
Brian Craft
Texas Bar No. 04972020
FINDLAY CRAFT P.C.
102 N. College Avenue, Suite 900
Tyler, TX 75702
Telephone: (903) 534-1100
Facsimile: (903) 534-1137
Email: efindlay@findlaycraft.com
Email: bcraft@findlaycraft.com

Steven Susser (*pro hac vice forthcoming*)
Alex Szypa (*pro hac vice forthcoming*)
CARLSON, GASKEY & OLDS, PC
400 W. Maple Rd., Suite 350
Birmingham, MI 48009

Telephone: (248) 988-8360
Facsimile: (248) 988-8363
ssusser@cgolaw.com
aszypa@cgolaw.com

Attorneys for Plaintiff Fuel Automation Station, LLC

EXHIBIT 1

careers@manticorefuels.com 432-299-3899

MANTICORE FUELS

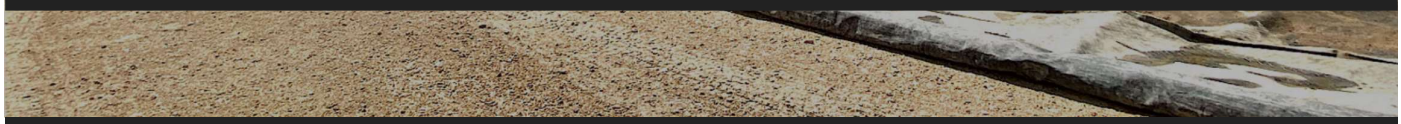

Our Products and Services

At Manticore Fuels we offer a wide range of oil & gas fuel services in West Texas and New Mexico. Manticore fuels specializes in servicing the energy sector by supplying dyed & clear diesel and servicing drilling rigs and frac jobs in the Permian Basin. We make sure fuel gets delivered on time and at the right site through our exceptional customer service. At Manticore Fuels, we rent and sell fuel tanks, and other related containers to fit our customer's needs. Our fuel tanks range in size from 500 to 20,000 gallons. Manticore Fuels provides refueling services 24/7/365 to frac sites and operations.

Fleet Fueling

Drilling Rig Fueling

Automated Fueling

Bulk Fuel Storage

careers@manticorefuels.com 432-299-3899

Automated Fueling

Manticore Fuels provides industry-leading Automated Fueling solutions for Hydraulic Fracturing operations. Our patented technology ensures maximum employee safety by complete removal from the hot zone, and accurately forecasts refueling needs to increase supply chain visibility. Additionally, our internally developed software maximizes efficiency by eliminating Non-Productive Time (NPT) through machine learning and real-time data analytics. To learn more about our Automated Fueling capabilities, contact us.

careers@manticorefuels.com 432-299-3899

HOME

ABOUT

SERVICES

CAREERS

SAFETY

SUSTAINABILITY

CONTACT

Useful Links

Home

About

Careers

Safety

Contact Us

© Copyright 2018 - Manticore Fuels

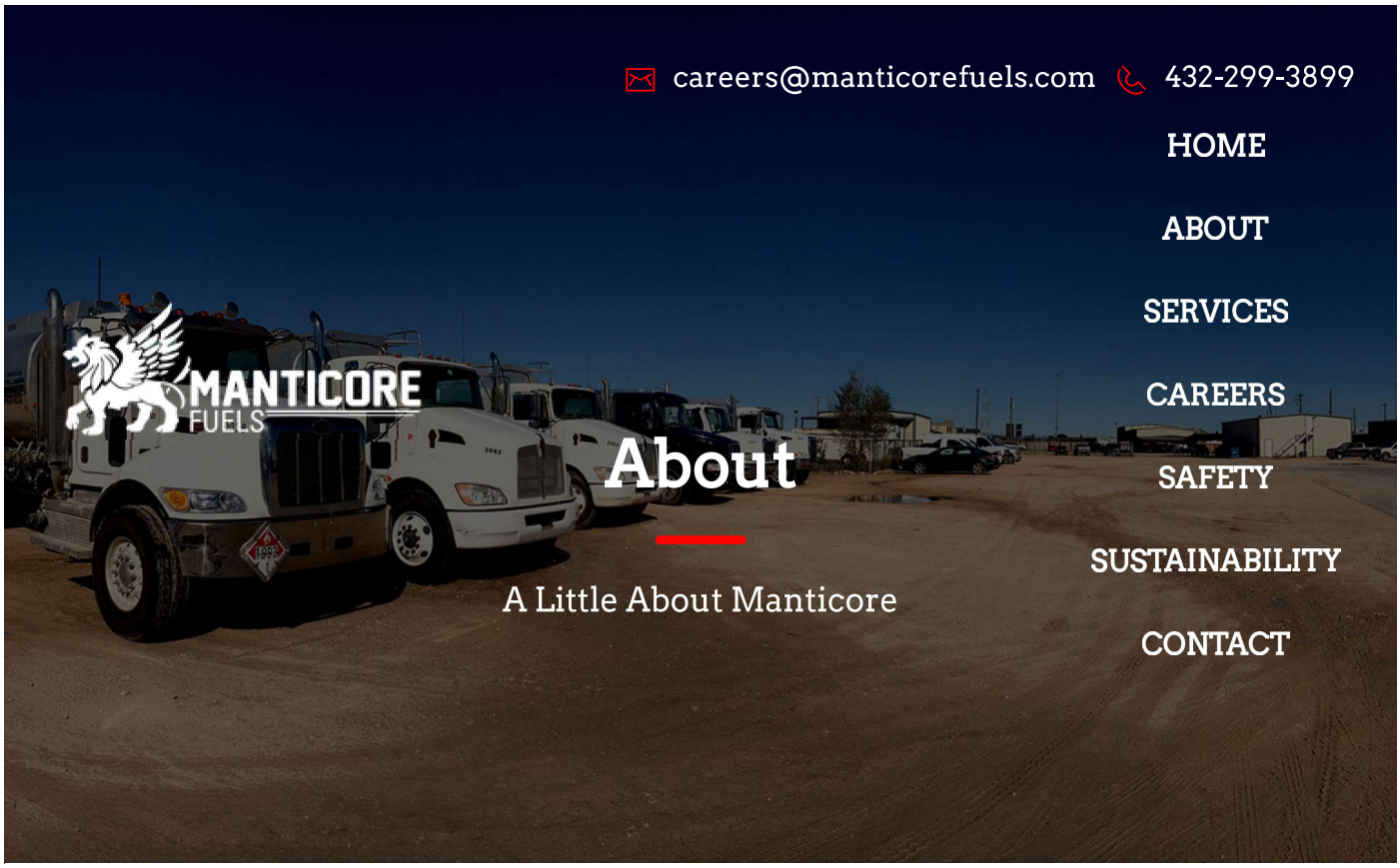
careers@manticorefuels.com
432-299-3899
HOME
ABOUT
SERVICES
CAREERS
SAFETY
SUSTAINABILITY
CONTACT
MANTICORE
FUELS
About
A Little About Manticore

Our Company

Company History

Headquartered in Midland, Texas, Manticore Fuels was formed to serve E&P and OFS companies to provide the highest level of service quality. As an independent and privately held company, Manticor Fuels is backed by energy industry veterans with deep expertise across the entire spectrum from production through refining and marketing. We have unique capabilities that ensure consistent, high quality diesel supply as we own and operate a 20,000 bbl/day specialty refinery which produces 1 million gallons of diesel per day.

Furthermore, we hold approximately 1.6 million bbls. of refined product across our storage tank farm ensuring our customers operations never run dry.

End-to-end fuel supply chain control

Integrated system of multi-stage quality assurance

Value-based pricing

eal-time technology and analytics

careers@manticorefuels.com 432-299-3899

Scope of Work

MANTICORE FUELS

Manticore Fuels provides diesel and related fueling solutions to drilling operators throughout West Texas. We offer on site services on a 24/7 basis. We pride ourselves on our reliable supply, the consistent quality of our product, and commitment to meeting all of our customers' needs.

Refinery and Bulk Storage

We account for roughly 2 million barrels owned or in storage across the US and have a fleet of over 50 bulk fuel trucks.

Wholesale Fuel Purchasing & Hedging

Our wholesale bulk fuel team is dedicated to dyed diesel procurement and price optimization.

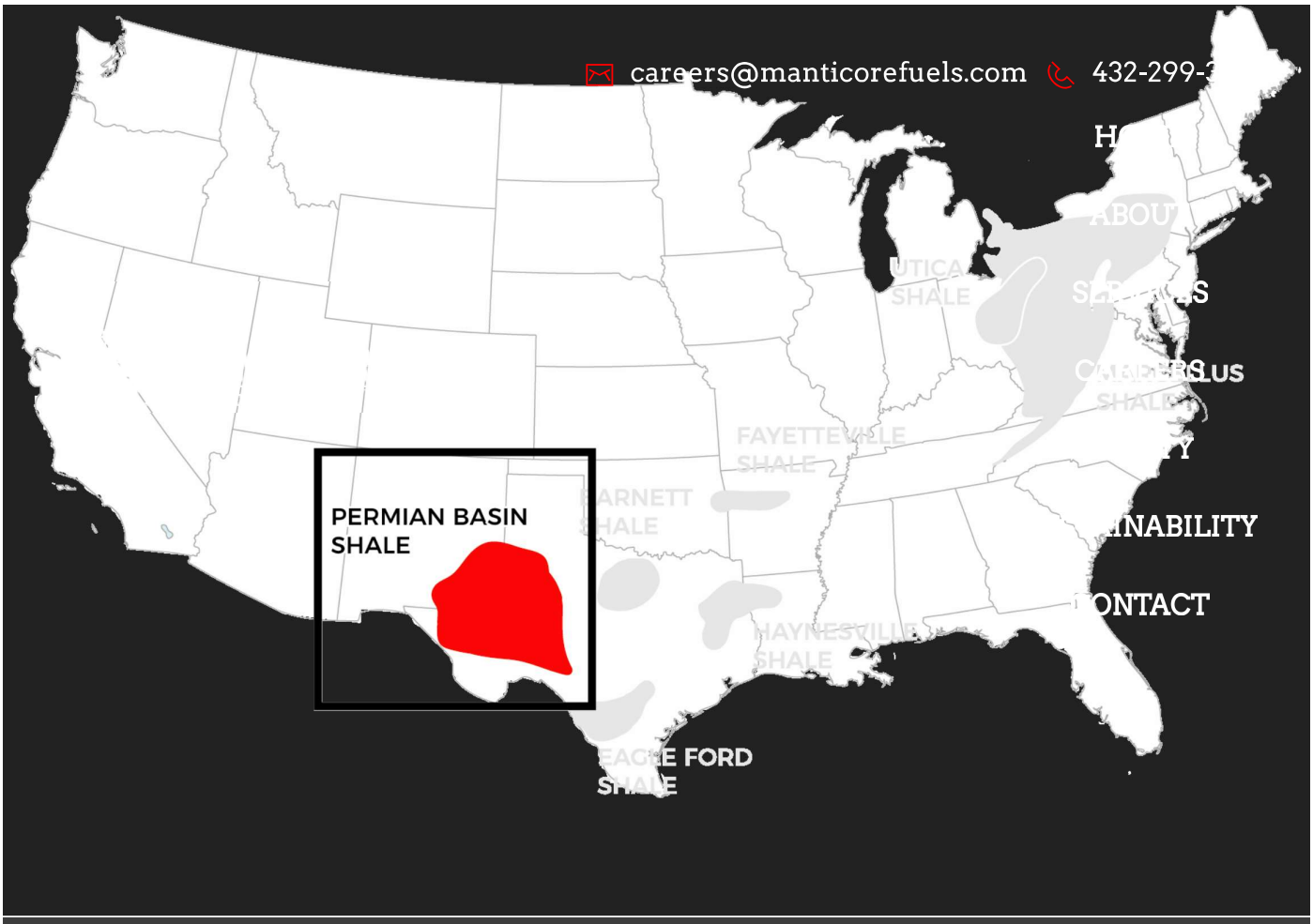

MANTICORE FUELS

Manticore Fuels is here to help. We are driven to provide best-in-class customer service and premium products with an emphasis on safety and sustainability.

Contact Info

432-299-3899

info@manticorefuels.com

2419 W. Murphy Road, Odessa, TX 79763

careers@manticorefuels.com 432-299-3899

Useful Links

Home
About
Careers
Safety
Contact Us

HOME
ABOUT
SERVICES
CAREERS
SAFETY
SUSTAINABILITY
CONTACT

© Copyright 2018 - Manticore Fuels

EXHIBIT 2

Info@corefueling.com
Call Us : (432) 848-3059

The most advanced diesel automation technology available.

CORE's custom-built, fully automated fueling units are tailor-made to client needs and specifications. We design and bring the most advanced diesel automation technology to the market, including:

- 26+ custom-built heavy-duty motorized hose reels with over 450 feet of capacity, dynamic flow rate modulation and predictive fuel consumption technology

- 1,500-gallon clear fuel cell with gauge panels and reinforced seams
- Bulk fuel storage (over 21,000-gallon capacity), including a patent pending piping system that prevents manual pull-off and fuel contamination issues
- Proprietary fuel valves that avoid clogging and spills, enhance pump performance and eliminate Non-Productive Time (NPT)

If your fueling operation requires it, CORE can provide it.

We pride ourselves on being the premier one-stop fueling solution with a bundled diesel and CNG offering. We've helped clients with:

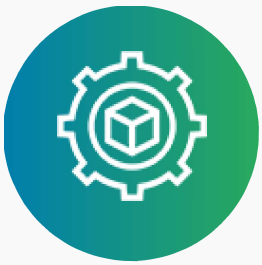

Automated Frac fueling

Drilling Rig fueling

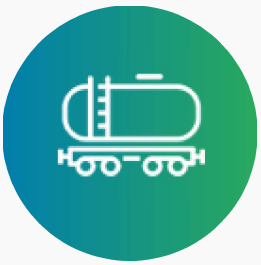

Fleet fueling

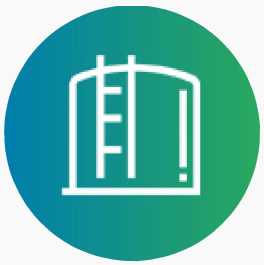

On-site fueling services

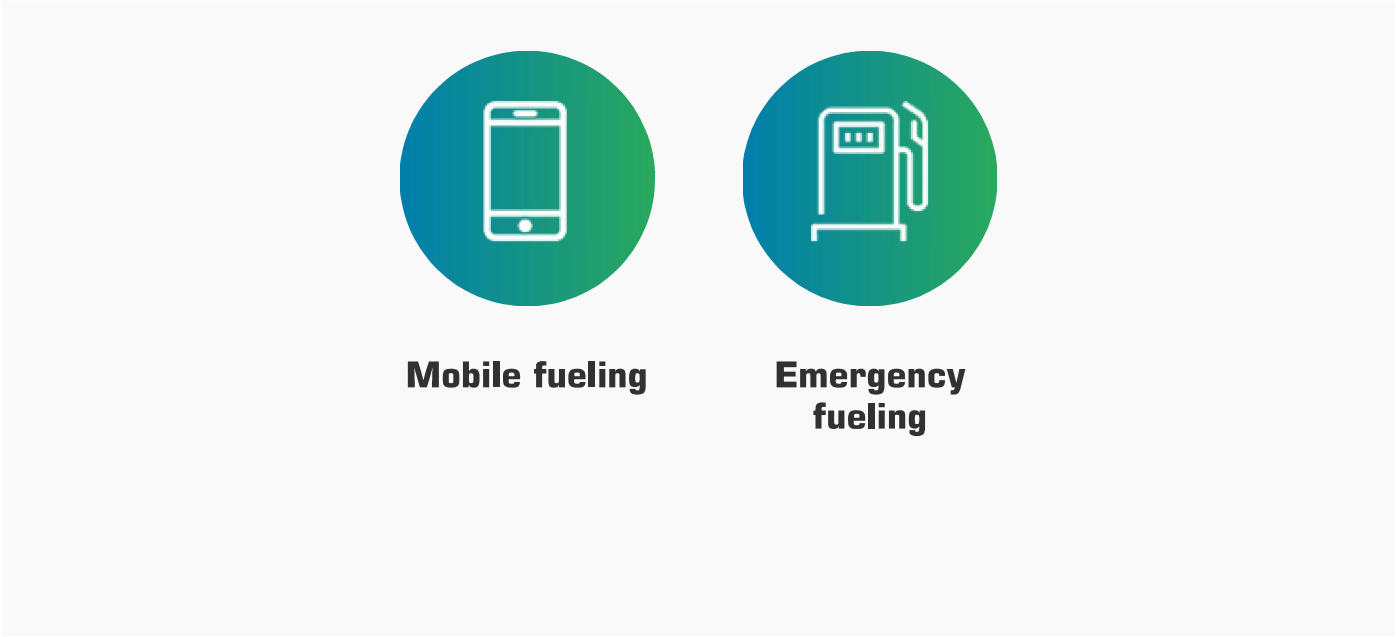

Safer. Cleaner. More efficient.

CORE's diesel automation services enable you to:

- Remove workers from the hot zone, eliminate spills and lower risk exposure with our 24/7 Remote Monitoring Center
- Minimize your onsite footprint
- Optimize your daily operations and reduce fleet wear and tear by eliminating Non-Productive Time between jobs

Let's Get To Work

To learn more about how CORE can help you with your diesel automation technology needs

Contact Us

Quick Links

Solutions

Sustainability

About Us

Solutions

Virtual Pipeline

Automated Fueling

Software & Analytics

Services & Support

Contact Us

Midland

Info@corefueling.com

(432) 848-3059

© 2022 CORE Automated Fueling Solutions. All rights reserved.

EXHIBIT 3

CARLSON, GASKEY & OLDS
A PROFESSIONAL CORPORATION

David L. Atallah
Todd W. Barrett
Timothy C. Bradley
Stephen A. Burch
Karin H. Butchko
John E. Carlson
Anthony P. Cho
Benjamin J. Coon
Jessica Fleetham
David J. Gaskey
William S. Gottschalk

400 WEST MAPLE ROAD
SUITE 350
BIRMINGHAM, MI 48009
Telephone 248.988.8360
Facsimile 248.988.8363

Quincy J. Harrison
Matthew L. Koziarz
Kerrie A. Laba
Timothy J. Murphy
Theodore W. Olds, III
Laura E. Parker
Stephen A. Sequin
John M. Siragusa
Steven Susser
Alex Szypa
Brian S. Tobin

July 19, 2022

Direct Dial: 248.283.0734
Email: ssusser@cgolaw.com

VIA U.S. MAIL AND EMAIL

Fernando Garcia
Vice President
Permian Global Inc.
1113 DAYTON RD MIDLAND, TX 79706-3806

Re: Infringement of Patents Owned by Fuel Automation Station, LLC

Dear Mr. Garcia:

I am an attorney for Fuel Automation Station, LLC ("FAS"), creators of the patented Fuel Automation Station automated fueling solution. FAS is the owner of US Patent Nos. 10,815,118, 10,974,955, and 9,586,805. It has come to our attention that Permian Global Inc. ("CORE") is infringing certain claims of the '118, '955, and '805 Patents. FAS therefore demands that CORE immediately cease its infringing activity and desist from such infringing activity in the future. A copy of each patent is enclosed for your reference.

Your company's website describes your Automated Fueling System and we compared it against the '118, '955, and '805 Patents. Based on our comparison, we have determined that your manufacture, use, offer for sale, and sale of the CORE Automated Fueling Solutions infringe at least claim 1 of each of the '118, '955, and '805 Patents in violation of Section 271 of the Patent Act.

Attached to this letter are claim charts that illustrate how the CORE Automated Fueling Solution meets each limitation of a representative claim of each of the '118, '955, and '805 Patents. Should you believe any of our allegations in the claim charts is wrong, please let us know.

Moreover, should CORE's infringement be found to be willful, CORE may be liable for enhanced damages and attorneys' fees incurred by FAS to enforce its rights. The Patent Act provides that once infringement has been established, a district court may "increase the damages up to three times the amount found or assessed." 35 U.S.C. § 284.

Patent infringement is a serious matter and FAS expects others to respect its patent rights. However, under the circumstances, FAS may be prepared to try to resolve this matter amicably.

Please contact me by August 1, 2022 so that we can arrange for a convenient time to discuss a possible resolution. If you prefer to have your legal counsel handle this, I would be grateful if you could have him contact me.

Very Truly Yours,

CARLSON, GASKEY & OLDS, PC

Steven Susser

cc: Alpesh Kadaki

US010815118B2

(12) **United States Patent**
Shock

(10) **Patent No.: US 10,815,118 B2**
(45) **Date of Patent: *Oct. 27, 2020**

(54) **MOBILE DISTRIBUTION STATION HAVING SENSOR COMMUNICATION LINES ROUTED WITH HOSES**

(71) Applicant: **Fuel Automation Station, LLC**, Birmingham, MI (US)

(72) Inventor: **Ricky Dean Shock**, Victoria, TX (US)

(73) Assignee: **FUEL AUTOMATION STATION, LLC**, Birmingham, MI (US)

(*) Notice: Subject to any disclaimer, the term of this patent is extended or adjusted under 35 U.S.C. 154(b) by 88 days.

This patent is subject to a terminal disclaimer.

(21) Appl. No.: **16/148,403**

(22) Filed: **Oct. 1, 2018**

(65) **Prior Publication Data**

US 2019/0031496 A1 Jan. 31, 2019

Related U.S. Application Data

(63) Continuation of application No. 15/290,304, filed on Oct. 11, 2016, now Pat. No. 10,087,065.

(51) **Int. Cl.**
B67D 7/04 (2010.01)
B67D 7/46 (2010.01)
(Continued)

(52) **U.S. Cl.**
CPC ***B67D 7/465*** (2013.01); ***B67D 7/04*** (2013.01); ***B67D 7/40*** (2013.01); ***B67D 7/845*** (2013.01); *B67D 2210/0006* (2013.01)

(58) **Field of Classification Search**
CPC B67D 7/465; B67D 7/40; B67D 7/845; B67D 2210/0006
(Continued)

(56) **References Cited**

U.S. PATENT DOCUMENTS

2,340,070 A 1/1944 McCauley et al.
2,516,150 A 7/1950 Samiran
(Continued)

FOREIGN PATENT DOCUMENTS

DE 1147397 4/1963
DE 20106400 10/2001
(Continued)

OTHER PUBLICATIONS

Shimazaki, H. (1986). Development of centralized fueling and management system of kerosene heating machine. Nisseki Technical Review, vol. 28(4). Jul. 1986. pp. 184-188.
(Continued)

Primary Examiner — Nicolas A Arnett
(74) *Attorney, Agent, or Firm* — Carlson, Gaskey & Olds, P.C.

(57) **ABSTRACT**

A distribution station includes a mobile trailer, a pump, a manifold connected with the pump, reels, flow passages connected to the manifold and running through the reels, hoses, connected the flow passages via the reels, valves situated between the manifold and the reels and operable to control fluid flow through the flow passages, fluid level sensors connected or connectable with the hoses, and a controller configured to operate the valves responsive to fluid level thresholds to control fluid flow to the hoses.

18 Claims, 4 Drawing Sheets

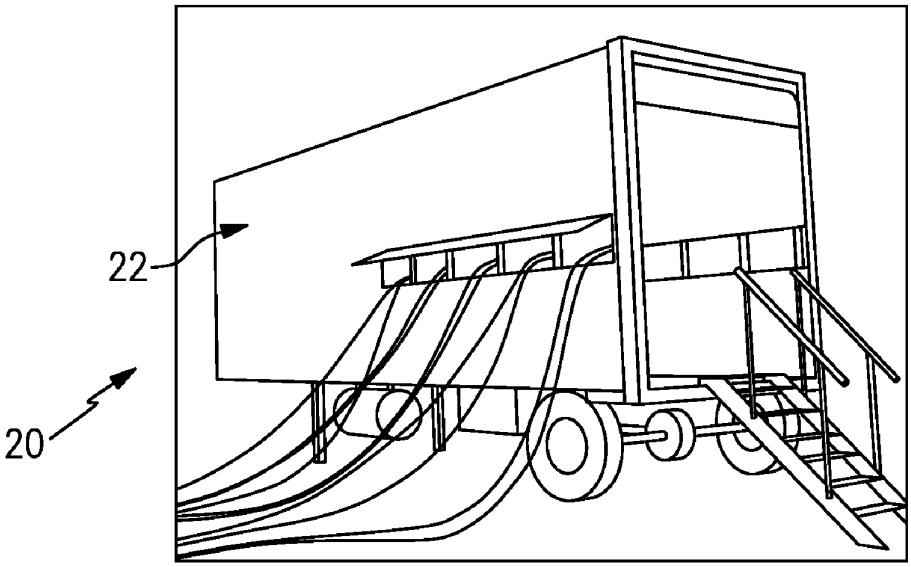

(51) **Int. Cl.**
B67D 7/40 (2010.01)
B67D 7/84 (2010.01)

(58) **Field of Classification Search**
USPC 141/94–95, 231
See application file for complete search history.

(56) **References Cited**

U.S. PATENT DOCUMENTS

2,769,572	A	11/1956	Harman et al.
2,777,461	A	1/1957	Wildhaber
2,966,921	A	1/1961	Whiteman
3,028,010	A	4/1962	Headrick
3,136,295	A	6/1964	Gramo
3,547,141	A	12/1970	Alexander
3,605,798	A	9/1971	Green et al.
3,618,643	A	11/1971	Thomson
3,625,399	A	12/1971	Heisler
3,677,284	A	7/1972	Mendez
3,881,509	A	5/1975	Newton
4,139,019	A	2/1979	Bresie et al.
4,284,210	A	8/1981	Horak
4,511,311	A	4/1985	Olson
4,591,115	A	5/1986	DeCarlo
4,651,788	A	3/1987	Grosskreuz et al.
4,728,005	A	3/1988	Jacobs et al.
4,930,665	A	6/1990	Devine
5,406,988	A	4/1995	Hopkins
5,454,408	A	10/1995	DiBella et al.
5,465,766	A	11/1995	Siegele et al.
5,503,199	A	4/1996	Whitley, II et al.
5,538,051	A	7/1996	Brown et al.
5,551,309	A	9/1996	Goossens et al.
5,651,400	A	7/1997	Corts et al.
5,660,358	A	8/1997	Grafwallner et al.
5,708,424	A	1/1998	Orlando et al.
5,749,339	A	5/1998	Graham et al.
5,887,567	A	3/1999	White
5,927,603	A	7/1999	McNabb
5,884,675	A	12/1999	Krasnov
6,098,646	A	8/2000	Hennemann et al.
6,206,056	B1	3/2001	Lagache
6,564,615	B1	5/2003	Carter
6,601,000	B1	7/2003	Barlian et al.
6,651,706	B2	11/2003	Litt
6,697,705	B2	2/2004	Johnson et al.
6,745,801	B1	6/2004	Cohen
6,755,225	B1	6/2004	Niedwiecki et al.
6,761,194	B1	7/2004	Blong
6,779,569	B1	8/2004	Teer, Jr. et al.
6,786,245	B1	9/2004	Eichelberger et al.
7,063,276	B2	6/2006	Newton
7,106,026	B2	9/2006	Moore
7,353,808	B2	4/2008	Kakoo
7,415,995	B2	8/2008	Plummer et al.
7,458,543	B2	12/2008	Cutler et al.
7,568,507	B2	8/2009	Farese et al.
7,602,143	B2	12/2009	Capizzo
7,628,182	B2	12/2009	Poulter
7,937,215	B2	5/2011	Humphrey
7,938,151	B2	5/2011	Hockner
8,069,885	B2	12/2011	Kederer
8,448,750	B2	5/2013	Gaugush et al.
9,346,662	B2	5/2016	Van Vliet et al.
9,371,830	B2	6/2016	Moffitt, Jr.
9,371,831	B2	6/2016	Moffitt, Jr.
9,434,598	B2	9/2016	Pick
9,586,805	B1	3/2017	Shock
9,725,295	B2	8/2017	McKay
9,790,080	B1 *	10/2017	Shock B67D 7/3272
9,815,683	B1 *	11/2017	Kalala B67D 7/362
9,981,840	B2 *	5/2018	Shock B67D 7/465
10,087,065	B2 *	10/2018	Shock B67D 7/465
10,150,662	B1 *	12/2018	Shock B67D 7/74
10,196,258	B2 *	2/2019	Kalala B67D 7/40
10,289,126	B2 *	5/2019	Shock G05D 9/12
10,303,190	B2 *	5/2019	Shock G05D 9/12
10,442,676	B1 *	10/2019	Walther B65H 75/4478
10,513,426	B2 *	12/2019	Shock B67D 7/3218
2001/0017815	A1	8/2001	Ackermann et al.
2004/0163731	A1	8/2004	Eichelberger
2004/0187950	A1	9/2004	Cohen
2005/0109561	A1	5/2005	Chopra
2007/0079891	A1	4/2007	Farese et al.
2007/0164031	A1	7/2007	Holz
2007/0181212	A1	8/2007	Fell
2011/0197988	A1	8/2011	Van Vliet
2016/0076533	A1	3/2016	Moffitt, Jr.
2019/0119096	A1 *	4/2019	Haile B67D 7/0401

FOREIGN PATENT DOCUMENTS

DE	10309307	9/2004
DE	102006025025	12/2006
DE	102006038652	2/2008
EP	0161042	11/1985
EP	0433041	6/2001
GB	2485832	5/2012
RU	28347	3/2003
RU	91135	1/2010
RU	2452668	1/2012
SU	949644	8/1982
WO	0177006	10/2001
WO	03029721	4/2003
WO	03093118	11/2003
WO	2006005686	1/2006
WO	2006116572	11/2006
WO	2007087849	8/2007
WO	2008083830	7/2008
WO	2009026607	3/2009
WO	20090608065	6/2009

OTHER PUBLICATIONS

Technical Document. Surface vehicle standard. SAE International. Sep. 2014. pp. 1-5.
Oilfield Business: Technologies. Frac Shack Inc. introduces world's first Bi-Fuel Distribution Unit for hydraulic fracturing industry. Texas Oil & Gas: The National Magazine for Oil & Gas in Texas. vol. 4, Issue 2. 2015. p. 27.
Frac Shack International. Publications & Endorsements. Retrieved Aug. 23, 2016 from: http://www.fracshack.com.
Frac Shack International. Technology. Retrieved Aug. 23, 2016 from: http://www.fracshack.com.
Frac Shack International. Design Benefits. Retrieved Aug. 23, 2016 from: http://www.fracshack.com.
Frac Shack International. Service. Retrieved Aug. 23, 2016 from: http://www.fracshack.com.
Frac Shack International. Frac Shack Series—Series A. Retrieved Aug. 23, 2016 from: http://www.fracshack.com.
Frac Shack International. Frac Shack Series—Series B. Retrieved Aug. 23, 2016 from: http://www.fracshack.com.
Frac Shack International. Frac Shack Series—Series C. Retrieved Aug. 23, 2016 from: http://www.fracshack.com.
Frac Shack International. Frac Shack Series—Series D. Retrieved Aug. 23, 2016 from: http://www.fracshack.com.
Frac Shack International. Frac Shack Series—Series E. Retrieved Aug. 23, 2016 from: http://www.fracshack.com.
Frac Shack International. Frac Shack Series—Series EG. Retrieved Aug. 23, 2016 from: http://www.fracshack.com.
Mann Tek. Dry Disconnect Couplings. Retrieved Jul. 22, 2016 from: http://www.manntek.com/products/drydisconnectcouplings p. 1-4.
Mann Tek. Dry Aviation Couplings. Retrieved Jul. 22, 2016 from: http://www.manntek.com/products/dryaviationcouplings p. 1-4.
Waterman, J. (2013). Better Safe than Sorry: Frac Shack a welcome addition to the oil patch. Jan. 2, 2013. Retrieved Aug. 23, 2016 from: http://www.pipelinenewsnorth.ca/better-safe-than-sorry-1.1123066.

* cited by examiner

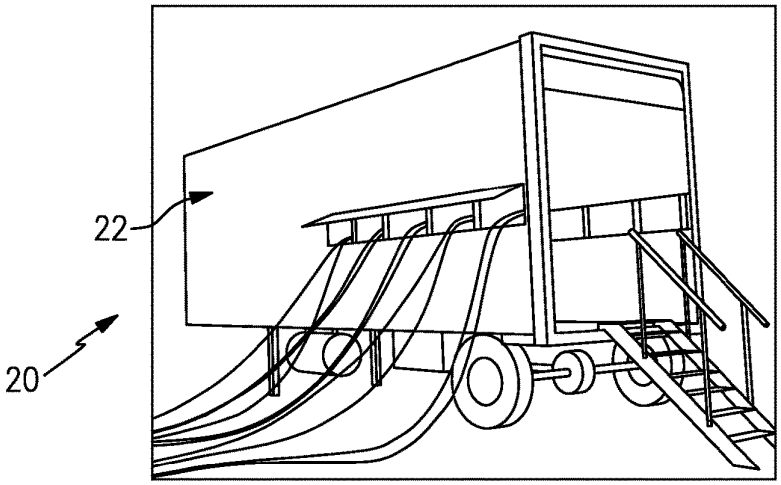
22
20

FIG.1

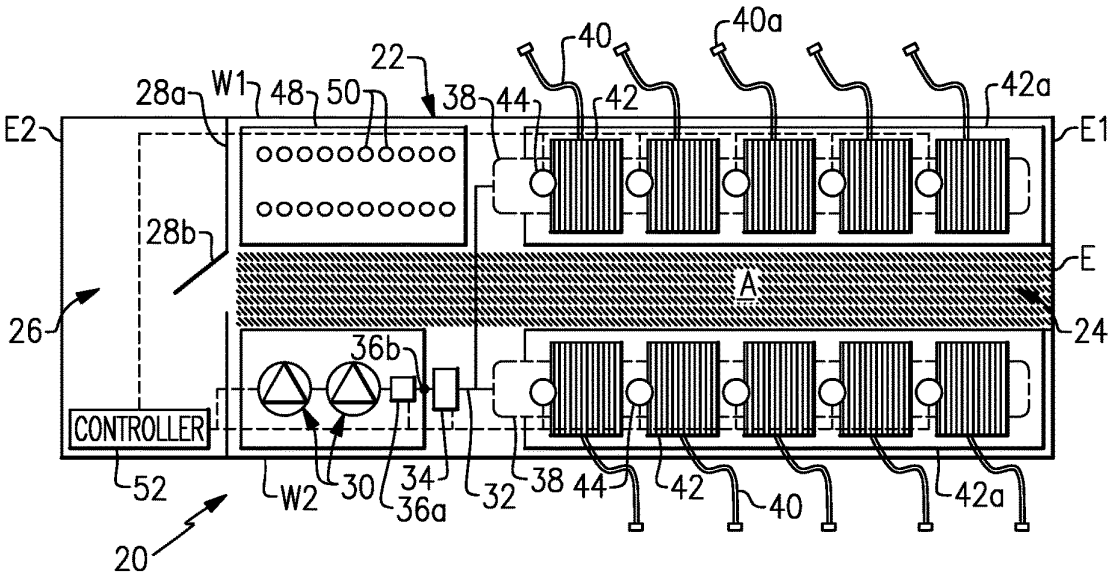
40
40a
22
28a
W1
48
50
38
44
42
42a
E2
E1
28b
E
A
26
24
36b
CONTROLLER
52
W2
30
34
36a
32
38
44
42
40
42a
20

FIG.2

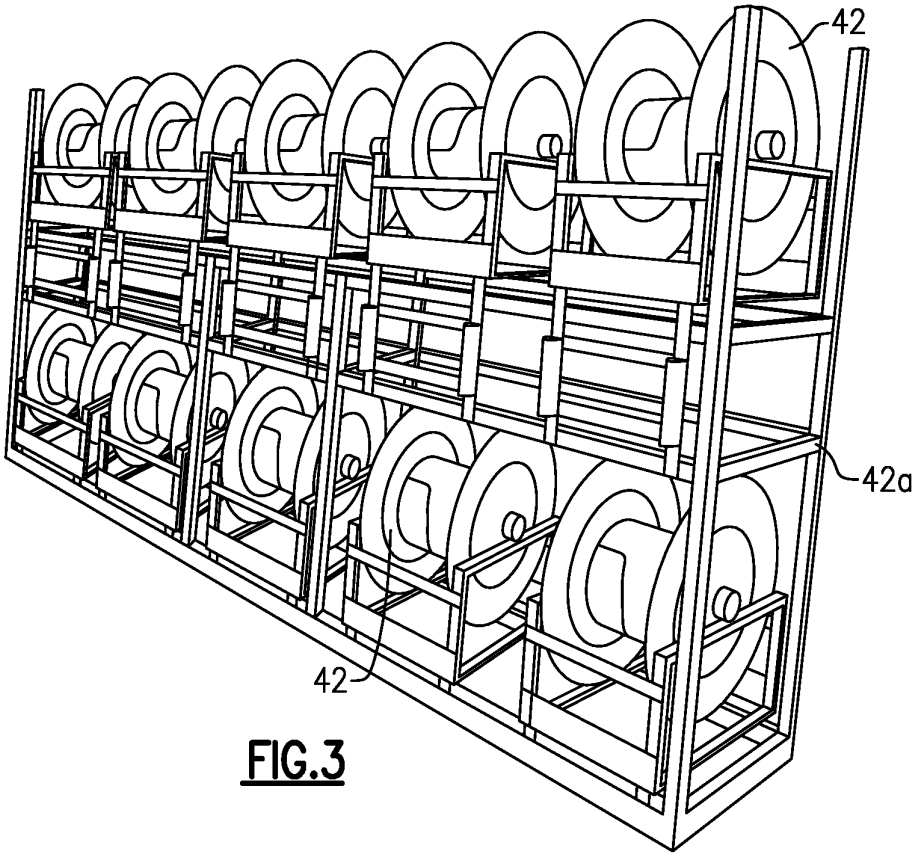

FIG.3

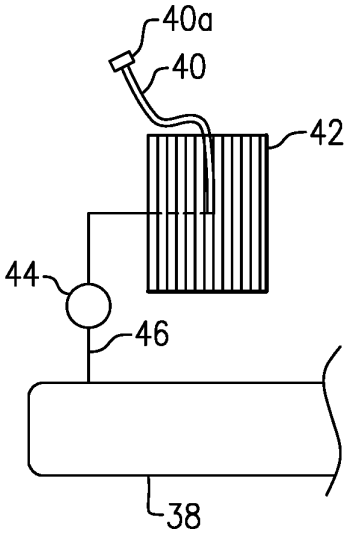

FIG.4

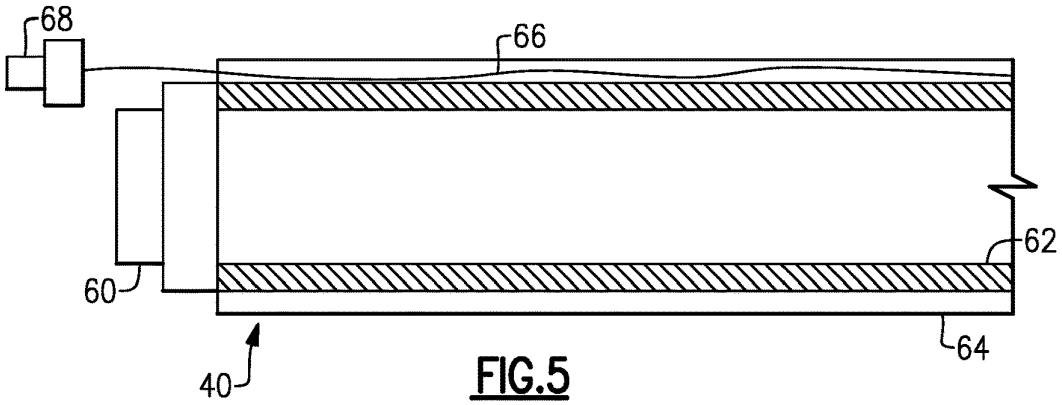

FIG.5

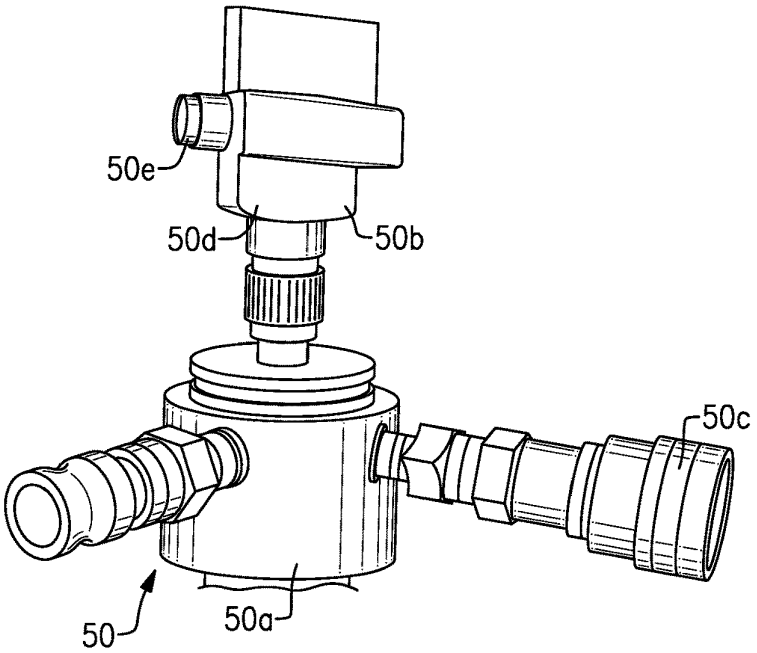

FIG.6

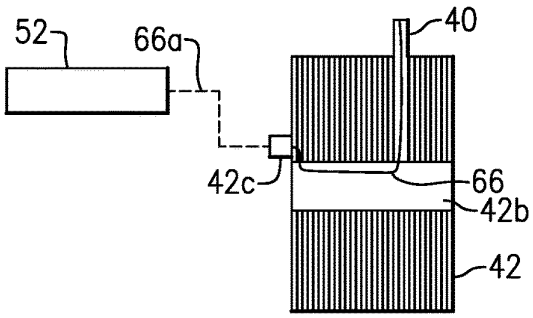

FIG.7

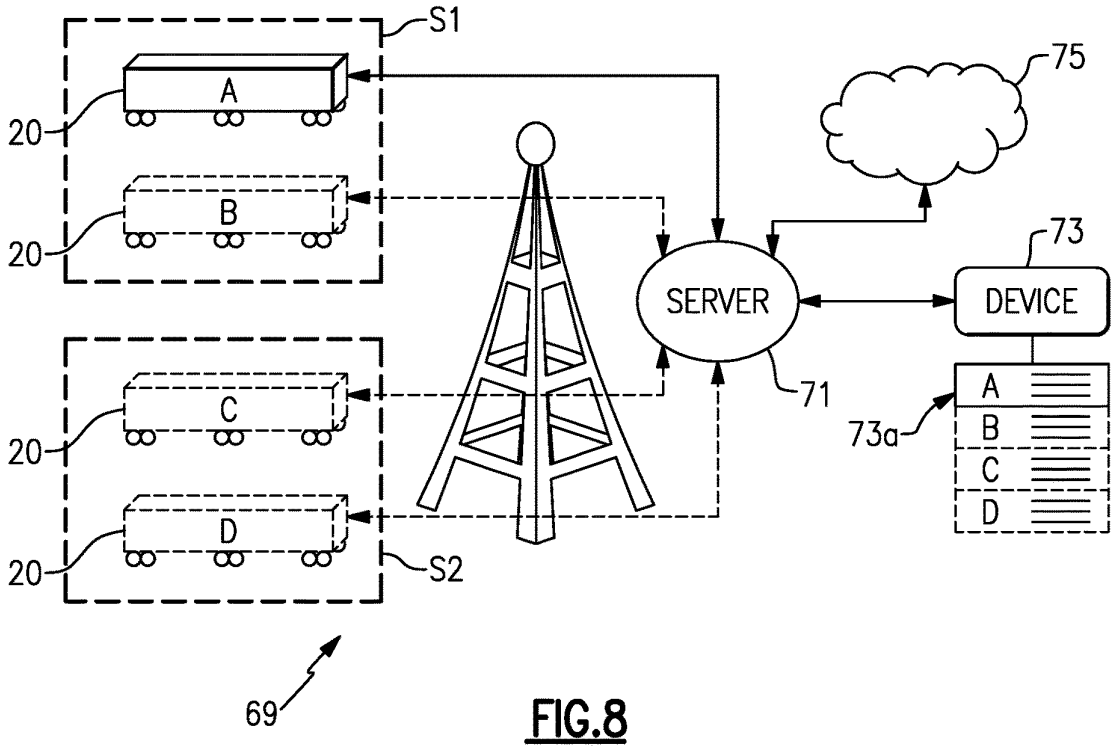

FIG.8

MOBILE DISTRIBUTION STATION HAVING SENSOR COMMUNICATION LINES ROUTED WITH HOSES

CROSS-REFERENCE TO RELATED APPLICATION

The present disclosure is a continuation of U.S. patent application Ser. No. 15/290,304 filed Oct. 11, 2016.

BACKGROUND

Hydraulic fracturing (also known as fracking) is a well-stimulation process that utilizes pressurized liquids to fracture rock formations. Pumps and other equipment used for hydraulic fracturing typically operate at the surface of the well site. The equipment may operate until refueling is needed, at which time the equipment may be shut-down for refueling. Shut-downs are costly and reduce efficiency. More preferably, to avoid shut-downs fuel is replenished in a hot-refueling operation while the equipment continues to run. This permits fracking operations to proceed continuously. However, hot-refueling can be difficult to reliably sustain for the duration of the fracking operation.

SUMMARY

A distribution station according to an example of the present disclosure includes a mobile trailer, a pump, a manifold connected with the pump, reels, flow passages connected to the manifold and running through the reels, hoses, connected the flow passages via the reels, valves situated between the manifold and the reels and operable to control fluid flow through the flow passages, fluid level sensors connected or connectable with the hoses, and a controller configured to operate the valves responsive to fluid level thresholds to control fluid flow to the hoses.

BRIEF DESCRIPTION OF THE DRAWINGS

The various features and advantages of the present disclosure will become apparent to those skilled in the art from the following detailed description. The drawings that accompany the detailed description can be briefly described as follows.

FIG. **1** illustrates an example mobile distribution station.

FIG. **2** illustrates an internal layout of a mobile distribution station.

FIG. **3** illustrates an isolated view of hose reels on a support rack used in a mobile distribution station.

FIG. **4** illustrates an example of a connection between a manifold, a control valve, and a reel.

FIG. **5** illustrates a sectioned view of an example hose for a mobile distribution station.

FIG. **6** illustrates an example of an integrated cap sensor for a mobile distribution station.

FIG. **7** illustrates an example of the routing of a sensor communication line through a reel in a mobile distribution station.

FIG. **8** illustrates a system that can be used to remotely monitor and manage one or more mobile distribution stations.

DETAILED DESCRIPTION

FIG. **1** illustrates a mobile distribution station **20** and FIG. **2** illustrates an internal layout of the station **20**. As will be

described, the station **20** may serve in a "hot-refueling" capacity to distribute fuel to multiple pieces of equipment while the equipment is running, such as fracking equipment at a well site. As will be appreciated, the station **20** is not limited to applications for fracking or for delivering fuel. The examples herein may be presented with respect to fuel delivery, but the station **20** may be used in mobile delivery of other fluids, in other gas/petroleum recovery operations, or in other operations where mobile refueling or fluid delivery will be of benefit.

In this example, the station **20** includes a mobile trailer **22**. Generally, the mobile trailer **22** is elongated and has first and second opposed trailer side walls W**1** and W**2** that join first and second opposed trailer end walls E**1** and E**2**. Most typically, the trailer **22** will also have a closed top (not shown). The mobile trailer **22** may have wheels that permit the mobile trailer **22** to be moved by a vehicle from site to site to service different hot-refueling operations. In this example, the mobile trailer **22** has two compartments. A first compartment **24** includes the physical components for distributing fuel, such as diesel fuel, and a second compartment **26** serves as an isolated control room for managing and monitoring fuel distribution. The compartments **24**/**26** are separated by an inside wall **28***a* that has an inside door **28***b*.

The first compartment **24** includes one or more pumps **30**. Fuel may be provided to the one or more pumps **30** from an external fuel source, such as a tanker truck on the site. On the trailer **22**, the one or more pumps **30** are fluidly connected via a fuel line **32** with a high precision register **34** for metering fuel. The fuel line **32** may include, but is not limited to, hard piping. In this example, the fuel line **32** includes a filtration and air eliminator system **36***a* and one or more sensors **36***b*. Although optional, the system **36***a* is beneficial in many implementations, to remove foreign particles and air from the fuel prior to delivery to the equipment. The one or more sensors **36***b* may include a temperature sensor, a pressure sensor, or a combination thereof, which assist in fuel distribution management.

The fuel line **32** is connected with one or more manifolds **38**. In the illustrated example, the station **20** includes two manifolds **38** that arranged on opposed sides of the compartment **24**. As an example, the manifolds **38** are elongated tubes that are generally larger in diameter than the fuel line **32** and that have at least one inlet and multiple outlets. Each hose **40** is wound, at least initially, on a reel **42** that is rotatable to extend or retract the hose **40** externally through one or more windows of the trailer **22**. Each reel **42** may have an associated motor to mechanically extend and retract the hose **40**.

As shown in an isolated view in FIG. **3**, the reels **42** are mounted on a support rack **42***a*. In this example, the support rack **42***a* is configured with upper and lower rows of reels **42**. Each row has five reels **42** such that each support rack **42***a* provides ten reels **42** and thus ten hoses **40**. There are two support racks **42***a* (FIG. **2**) arranged on opposed sides of the first compartment **24**, with an aisle (A) that runs between the support racks **42***a* from an outside door E to the inside door **28***b*. The station **20** therefore provides twenty hoses **40** in the illustrated arrangement, with ten hoses **40** provided on each side of the station **20**. As will be appreciated, fewer or additional reels and hoses may be used in alternative examples.

As shown in a representative example in FIG. **4**, each hose **40** is connected to a respective one of the reels **42** and a respective one of a plurality of control valves **44**. For example, a secondary fuel line **46** leads from the manifold **38** to the reel **42**. The control valve **44** is in the secondary

fuel line **46**. The control valve **44** is moveable between open and closed positions to selectively permit fuel flow from the manifold **38** to the reel **42** and the hose **40**. For example, the control valve **44** is a powered valve, such as a solenoid valve.

In the illustrated example, the first compartment **24** also includes a sensor support rack **48**. The sensor support rack **48** holds integrated fuel cap sensors **50** (when not in use), or at least portions thereof. When in use, each integrated fuel cap sensor **50** is temporarily affixed to a piece of equipment (i.e., the fuel tank of the equipment) that is subject to the hot-refueling operation. Each hose **40** may include a connector end **40***a* and each integrated fuel cap sensor **50** may have a corresponding mating connector to facilitate rapid connection and disconnection of the hose **40** with the integrated fuel cap sensor **50**. For example, the connector end **40***a* and mating connector on the integrated fuel cap sensor **50** form a hydraulic quick-connect.

At least the control valves **44**, pump or pumps **30**, sensor or sensors **36***b*, and register **34** are in communication with a controller **52** located in the second compartment **26**. As an example, the controller **52** includes software, hardware, or both that is configured to carry out any of the functions described herein. In one further example, the controller **52** includes a programmable logic controller with a touch-screen for user input and display of status data. For example, the screen may simultaneously show multiple fluid levels of the equipment that is being serviced.

When in operation, the integrated fuel cap sensors **50** are mounted on respective fuel tanks of the pieces of equipment that are subject to the hot-refueling operation. The hoses **40** are connected to the respective integrated fuel cap sensors **50**. Each integrated fuel cap sensor **50** generates signals that are indicative of the fuel level in the fuel tank of the piece of equipment on which the integrated fuel cap sensor **50** is mounted. The signals are communicated to the controller **52**.

The controller **52** interprets the signals and determines the fuel level for each fuel tank of each piece of equipment. In response to a fuel level that falls below a lower threshold, the controller **52** opens the control valve **44** associated with the hose **40** to that fuel tank and activates the pump or pumps **30**. The pump or pumps **30** provide fuel flow into the manifolds **38** and through the open control valve **44** and reel **42** such that fuel is provided through the respective hose **40** and integrated fuel cap sensor **50** into the fuel tank. The lower threshold may correspond to an empty fuel level of the fuel tank, but more typically the lower threshold will be a level above the empty level to reduce the potential that the equipment completely runs out of fuel and shuts down. The controller **52** can also be programmed with a failsafe measure related to the operation of the fuel cap sensors **50**. As an example, once a control valve **44** is open, if the controller **52** does not detect a change in fuel level from the fuel cap sensor **50** associated with the control valve **44** within a preset time period, the controller **52** shuts the pump **30** off and closes the control valve **44**. Thus, if a hose **40** were to rupture, spillage of fuel is limited to the volume of fuel in the hose **40**. For instance, the preset time period may be three seconds, six seconds, ten seconds, or fifteen seconds, which may limit spillage to approximately fifteen gallons for a given size of hose.

The controller **52** also determines when the fuel level in the fuel tank reaches an upper threshold. The upper threshold may correspond to a full fuel level of the fuel tank, but more typically the upper threshold will be a level below the full level to reduce the potential for overflow. In response to reaching the upper threshold, the controller **52** closes the respective control valve **44** and ceases the pump or pumps **30**. If other control valves **44** are open or are to be opened, the pump or pumps **30** may remain on. The controller **52** can also be programmed with an electronic stop failsafe measure to prevent over-filling. As an example, once an upper threshold is reached on a first tank and the control valve **44** is closed, but the pump **30** is otherwise to remain on to fill other tanks, if the fuel level continues to rise in the first tank, the controller **52** shuts the pump **30** off.

Multiple control valves **44** may be open at one time, to provide fuel to multiple fuel tanks at one time. Alternatively, if there is demand for fuel from two or more fuel tanks, the controller **52** may sequentially open the control valves **44** such that the tanks are refueled sequentially. For instance, upon completion of refueling of one fuel tank, the controller **52** closes the control valve **44** of the hose **40** associated with that tank and then opens the next control valve **44** to begin refueling the next fuel tank. Sequential refueling may facilitate maintaining internal pressure in the manifold and fuel line **32** above a desired or preset pressure threshold to more rapidly deliver fuel. Similarly, the controller **52** may limit the number of control valves **44** that are open at any one instance in order to maintain the internal pressure in the manifold and fuel line **32** above a desired or preset threshold. The controller **52** may perform the functions above while in an automated operating mode. Additionally, the controller **52** may have a manual mode in which a user can control at least some functions through the PLC, such as starting and stopped the pump **30** and opening and closing control valves **44**. For example, manual mode may be used at the beginning of a job when initially filling tanks to levels at which the fuel cap sensors **50** can detect fuel and/or during a job if a fuel cap sensor **50** becomes inoperable. Of course, operating in manual mode may deactivate some automated functions, such as filling at the low threshold or stopping at the high threshold.

In addition to the use of the sensor signals to determine fuel level, or even as an alternative to use of the sensor signals, the refueling may be time-based. For instance, the fuel consumption of a given piece of equipment may be known such that the fuel tank reaches the lower threshold at known time intervals. The controller **52** is operable to refuel the fuel tank at the time intervals rather than on the basis of the sensor signals, although sensor signals may also be used to verify fuel level.

The controller **52** also tracks the amount of fuel provided to the fuel tanks. For instance, the register **34** precisely measures the amount of fuel provided from the pump or pumps **30**. As an example, the register **34** is an electronic register and has a resolution of about 0.1 gallons. The register **34** communicates measurement data to the controller **52**. The controller **52** can thus determine the total amount of fuel used to very precise levels. The controller **52** may also be configured to provide outputs of the total amount of fuel consumed. For instance, a user may program the controller **52** to provide outputs at desired intervals, such as by worker shifts or daily, weekly, or monthly periods. The outputs may also be used to generate invoices for the amount of fuel used. As an example, the controller **52** may provide a daily output of fuel use and trigger the generation of an invoice that corresponds to the daily fuel use, thereby enabling almost instantaneous invoicing.

In a further example, the integrated fuel cap sensors **50** are each hard-wired to the controller **52**. The term "hard-wired" or variations thereof refers to a wired connection between two components that serves for electronic communication there between, which here is a sensor and a controller. The

hard-wiring may facilitate providing more reliable signals from the integrated fuel cap sensors **50**. For instance, the many pieces of equipment, vehicles, workers, etc. at a site may communicate using wireless devices. The wireless signals may interfere with each other and, therefore, degrade communication reliability. Hard-wiring the integrated fuel cap sensors **50** to the controller **52** facilitates reduction in interference and thus enhances reliability.

In general, hard-wiring in a hot-refueling environment presents several challenges. For example, a site has many workers walking about and typically is located on rough terrain. Thus, as will be described below, each integrated fuel cap sensor **50** is hard-wired through the associated hose **40** to the controller **52**.

FIG. **5** illustrates a representative portion of one of the hoses **40** and, specifically, the end of the hose **40** that will be located at the fuel tank of the equipment being refueled. In this example, the hose **40** includes a connector **60** at the end for detachably connecting the hose **40** to the integrated fuel cap sensors **50**. The hose **40** is formed of a tube **62** and a sleeve **64** that circumscribes the tube **62**. As an example, the tube **62** may be a flexible elastomeric tube and the sleeve **64** may be a flexible fabric sleeve. The sleeve **64** is generally loosely arranged around the tube **62**, although the sleeve **64** may closely fit on the tube **62** to prevent substantial slipping of the sleeve **64** relative to the tube **62** during use and handling. Optionally, to further prevent slipping and/or to secure the sleeve **64**, bands may be tightened around the hose **40**. As an example, one or more steel or stainless steel bands can be provided at least near the ends of the hose **40**.

A plurality of sensor communication lines **66** (one shown) are routed with or in the respective hoses **40**. For instance, each line **66** may include a wire, a wire bundle, and/or multiple wires or wire bundles. In one further example, the line **66** is a low milliamp intrinsic safety wiring, which serves as a protection feature for reducing the concern for operating electrical equipment in the presence of fuel by limiting the amount of thermal and electrical energy available for ignition. In this example, the line **66** is routed through the hose **40** between (radially) the tube **62** and the sleeve **64**. The sleeve **64** thus serves to secure and protect the line **66**, and the sleeve **64** may limit spill and spewing if there is a hose **40** rupture. In particular, since the line **66** is secured in the hose **40**, the line **66** does not present a tripping concern for workers. Moreover, in rough terrain environments where there are stones, sand, and other objects that could damage the line **66** if it were free, the sleeve **64** shields the line **66** from direct contact with such objects. In further examples, the line **66** may be embedded or partially embedded in the tube **62** or the sleeve **64**.

In this example, the line **66** extends out from the end of the hose **40** and includes a connector **68** that is detachably connectable with a respective one of the integrated fuel cap sensors **50**. For example, FIG. **6** illustrates a representative example of one of the integrated fuel cap sensors **50**. The integrated fuel cap sensor **50** includes a cap portion **50***a* and a level sensor portion **50***b*. The cap portion **50***a* is detachably connectable with a port of a fuel tank. The cap portion **50***a* includes a connector port **50***c*, which is detachably connectable with the connector **60** of the hose **40**. The sensor portion **50***b* includes a sensor **50***d* and a sensor port **50***e* that is detachably connectable with the connector **68** of the line **66**. The fuel cap sensor **50** may also include a vent port that attaches to a drain hose, to drain any overflow into a containment bucket and/or reduce air pressure build-up in a fuel tank. Thus, a user may first mount the cap portion **50***a* on the fuel tank of the equipment, followed by connecting the hose **40** to the port **50***c* and connecting the line **66** to the port **50***e*.

The sensor **50***d* may be any type of sensor that is capable of detecting fluid or fuel level in a tank. In one example, the sensor **50***d* is a guided wave radar sensor. A guided wave radar sensor may include a transmitter/sensor that emits radar waves, most typically radio frequency waves, down a probe. A sheath may be provided around the probe. For example, the sheath may be a metal alloy (e.g., stainless steel or aluminum) or polymer tube that surrounds the probe. One or more bushings may be provided between the probe and the sheth, to separate the probe from the sheath. The sheath shields the probe from contact by external objects, the walls of a fuel tank, or other components in a fuel tank, which might otherwise increase the potential for faulty sensor readings. The probe serves as a guide for the radar waves. The radar waves reflect off of the surface of the fuel and the reflected radar waves are received into the transmitter/sensor. A sensor controller determines the "time of flight" of the radar waves, i.e., how long it takes from emission of the radar waves for the radar waves to reflect back to the transmitter/sensor. Based on the time, the sensor controller, or the controller **52** if the sensor controller does not have the capability, determines the distance that the radar waves travel. A longer distance thus indicates a lower fuel level (farther away) and a shorter distance indicates a higher fuel level (closer).

The line **66** routes through the hose **40** and back to the reel **42** in the trailer **22**. For example, the line **66** is also routed or hard-wired through the reel **42** to the controller **52**. FIG. **7** illustrates a representative example of the routing in the reel **42**. In this example, the reel **42** includes a spindle **42***b* about which the reel is rotatable. The spindle **42***b* may be hollow, and the line **66** may be routed through the spindle **42***b*. The reel **42** may also include a connector **42***c* mounted thereon. The connector **42***c* receives the line **66** and serves as a port for connection with another line **66***a* to the controller **52**.

The lines **66***a* may converge to one or more communication junction blocks or "bricks" prior to the controller **52**. The communication junction blocks may serve to facilitate the relay of the signals back to the controller **52**. The communication junction blocks may alternatively or additionally serve to facilitate identification of the lines **66**, and thus the signals, with respect to which of the hoses a particular line **66** is associated with. For instance, a group of communication junction blocks may have unique identifiers and the lines **66** into a particular communication junction block may be associated with identifiers. A signal relayed into the controller **52** may thus be associated with the identifiers of the communication junction blocks and a particular line **66** of that communication junction block in order to identify which hose **40** the signal is to be associated with. The valves **44** may also communicate with the controller **52** in a similar manner through the communication junction blocks.

As can be appreciated from the examples herein, the station **20** permits continuous hot-refueling with enhanced reliability. While there might generally be a tendency to choose wireless sensor communication for convenience, a hard-wired approach mitigates the potential for signal interference that can arise with wireless. Moreover, by hard-wiring the sensors through the hoses to the controller, wired communication lines are protected from exposure and do not pose additional concerns for workers on a site.

FIG. **8** illustrates a system **69** for remotely monitoring and/or managing at least one mobile distribution station **20** (A). It is to be appreciated that the system **69** may include additional mobile distribution stations, shown in phantom at **20** (B), **20** (C), and **20** (D) (collectively mobile distribution stations **20**), for example. The mobile distribution stations **20** may be located at a single work site or located across several different work sites S**1** and S**2**. Each mobile distribution station **20** is in communication with one or more servers **71** that are remotely located from the mobile distribution stations **20** and work sites S**1**/S**2**. In most implementations, the communication will be wireless.

The server **71** may include hardware, software, or both that is configured to perform the functions described herein. The server **71** may also be in communication with one or more electronic devices **73**. The electronic device **73** is external of or remote from the mobile fuel distribution stations **20**. For example, the electronic device **73** may be, but is not limited to, a computer, such as a desktop or laptop computer, a cellular device, or tablet device. The electronic device **73** may communicate and interact in the system **69** via data connectivity, which may involve internet connectivity, cellular connectivity, software, mobile application, or combinations of these.

The electronic device **73** may include a display **73***a*, such as an electronic screen, that is configured to display the fuel operating parameter data of each of the mobile distribution stations **20**. As an example, the electronic device **73** may display in real-time the operating parameter data of each of the mobile distribution stations **20** in the system **69** to permit remote monitoring and management control of the mobile distribution stations **20**. For instance, the operating parameter data may include fuel temperature, fuel pressure, fuel flow, total amount of fuel distributed, operational settings (e.g., low and high fuel level thresholds), or other parameters.

The server **71** may also be in communication with one or more cloud-based devices **75**. The cloud-based device **75** may include one or more servers and a memory for communicating with and storing information from the server **71**.

The server **71** is configured to communicate with the mobile distribution stations **20**. Most typically, the server **71** will communicate with the controller **52** of the mobile distribution station **20**. In this regard, the controller **52** of each mobile distribution station **20** may be include hardware, software, or both that is configured for external communication with the server **71**. For example, each controller **52** may communicate and interact in the system **69** via data connectivity, which may involve internet connectivity, cellular connectivity, software, mobile application, or combinations of these.

The server **71** is configured to receive operating parameter data from the mobile distribution stations **20**. The operating parameter data may include or represent physical measurements of operating conditions of the mobile distribution station **20**, status information of the mobile distribution station **20**, setting information of the mobile distribution station **20**, or other information associated with control or management of the operation of the mobile distribution station **20**.

For example, the server **71** utilizes the information to monitor and auto-manage the mobile distribution station **20**. The monitoring and auto-management may be for purposes of identifying potential risk conditions that may require shutdown or alert, purposes of intelligently enhancing operation, or purposes of reading fuel or fluid levels in real-time via the sensors **50**. As an example, the server **71** may utilize the information to monitor or display fuel or fluid levels, or determine whether the fuel operating parameter data is within a preset limit and send a control action in response to the operating parameter data being outside the preset limit. As will described in further detail below, the control action may be a shutdown instruction to the mobile fuel distribution stations **20**, an adjustment instruction to the mobile fuel distribution stations **20**, or an alert to the electronic device **73**.

Although a combination of features is shown in the illustrated examples, not all of them need to be combined to realize the benefits of various embodiments of this disclosure. In other words, a system designed according to an embodiment of this disclosure will not necessarily include all of the features shown in any one of the Figures or all of the portions schematically shown in the Figures. Moreover, selected features of one example embodiment may be combined with selected features of other example embodiments.

The preceding description is exemplary rather than limiting in nature. Variations and modifications to the disclosed examples may become apparent to those skilled in the art that do not necessarily depart from this disclosure. The scope of legal protection given to this disclosure can only be determined by studying the following claims.

What is claimed is:

1. A distribution station comprising:

a mobile trailer;

a pump on the mobile trailer;

a manifold on the mobile trailer and connected with the pump;

a plurality of reels on the mobile trailer;

a plurality of flow passages, each said flow passage being connected to the manifold and running through a respective one of the reels;

a plurality of hoses, each said hose being connected with a respective one of the flow passages via a respective one of the reels;

a plurality of valves on the mobile trailer, each said valve situated between the manifold and a respective different one of the reels and being operable to control fluid flow through a respective one of the flow passages;

a plurality of fluid level sensors, each said fluid level sensor being connected or connectable with a respective different one of the hoses; and

a controller configured to operate the valves responsive to fluid level thresholds to control fluid flow to the hoses.

2. The distribution station as recited in claim **1**, wherein the controller is configured to determine fluid levels based on signals from the fluid level sensors and determine whether one or more of the fluid levels are below one or more of the fluid level thresholds.

3. The distribution station as recited in claim **2**, wherein the controller is configured to open the valves for which the fluid levels are below the fluid level thresholds.

4. The distribution station as recited in claim **2**, further comprising a plurality of sensor communication lines, each said sensor communication line being connected or connectable with a respective different one of the fluid level sensors, and each said sensor communication line being routed with a respective different one of the hoses.

5. The distribution station as recited in claim **4**, wherein each of the hoses includes a tube and a sleeve that circumscribes the tube, and each said sensor communication line is routed in the respective different one of the hoses between the tube and the sleeve.

6. The distribution station as recited in claim **5**, wherein each said sensor communication line is routed through a respective different one of the reels.

7. The distribution station as recited in claim **6**, further comprising a plurality of connectors, each of the connectors being mounted on a respective different one of the reels and each of the connectors receiving a respective different one of the sensor communication lines.

8. The distribution station as recited in claim **7**, wherein each of the reels includes a respective spindle, and each of the sensor communication lines is routed through a respective different one of the spindles.

9. The distribution station as recited in claim **8**, wherein controller is operable to open and close the plurality of valves responsive to a fuel level threshold.

10. A distribution station comprising:

a mobile trailer;

a pump on the mobile trailer;

a manifold on the mobile trailer and connected with the pump;

a plurality of reels on the mobile trailer;

a plurality of hoses, each said hose being connected with the manifold and each said hose including a tube and a sleeve that circumscribes the tube;

a plurality of valves on the mobile trailer, each said valve situated between the manifold and a respective different one of the hoses and being operable to control fluid flow from the manifold to the respective different one of the hoses;

a plurality of fluid level sensors, each said fluid level sensor being connected or connectable with a respective different one of the hoses; and

a controller configured to operate the valves responsive to fluid level thresholds to control fluid flow to the hoses.

11. The distribution station as recited in claim **10**, wherein the sleeve is a fabric sleeve.

12. The distribution station as recited in claim **10**, further comprising bands around the hoses, the bands securing the sleeve on the tube.

13. The distribution station as recited in claim **12**, wherein the bands are steel.

14. The distribution station as recited in claim **10**, further comprising a communication line between the sleeve and the tube.

15. A distribution station comprising:

a mobile trailer including a pump, a manifold connected with the pump, reels, flow passages connected to the manifold and running through the reels, hoses connected with the flow passages via the reels and each of the hoses including a tube and a sleeve that circumscribes the tube, valves situated between the manifold and the reels and operable to control fluid flow through the flow passages, fluid level sensors connected or connectable with the hoses, and a controller configured to operate the valves responsive fluid level thresholds to control fluid flow to the hoses.

16. The distribution station as recited in claim **15**, wherein the controller is configured to determine fluid levels based on signals from the fluid level sensors, determine whether one or more of the fluid levels are below one or more of the fluid level thresholds, and open the valves for which the fluid levels are below the fluid level thresholds.

17. The distribution station as recited in claim **16**, further comprising a plurality of sensor communication lines, each said sensor communication line being connected or connectable with a respective different one of the fluid level sensors.

18. The distribution station as recited in claim **17**, wherein each said sensor communication line is routed in the respective different one of the hoses between the tube and the sleeve.

* * * * *

US010974955B2

(12) **United States Patent**
Shock

(10) **Patent No.: US 10,974,955 B2**
(45) **Date of Patent: *Apr. 13, 2021**

(54) **MOBILE DISTRIBUTION STATION FOR FLUID DISPENSING**

(71) Applicant: **Fuel Automation Station, LLC**, Birmingham, MI (US)

(72) Inventor: **Ricky Dean Shock**, Victoria, TX (US)

(73) Assignee: **FUEL AUTOMATION STATION, LLC**, Birmingham, MI (US)

(*) Notice: Subject to any disclaimer, the term of this patent is extended or adjusted under 35 U.S.C. 154(b) by 0 days.

This patent is subject to a terminal disclaimer.

(21) Appl. No.: **16/700,095**

(22) Filed: **Dec. 2, 2019**

(65) **Prior Publication Data**

US 2020/0102208 A1 Apr. 2, 2020

Related U.S. Application Data

(63) Continuation of application No. 15/890,584, filed on Feb. 7, 2018, now Pat. No. 10,494,251, which is a (Continued)

(51) **Int. Cl.**
B67D 7/04 (2010.01)
B67D 7/84 (2010.01)
(Continued)

(52) **U.S. Cl.**
CPC ***B67D 7/845*** (2013.01); ***B60P 3/035*** (2013.01); ***B62D 63/08*** (2013.01); ***B67D 7/04*** (2013.01);
(Continued)

(58) **Field of Classification Search**
CPC . B67D 7/845; B67D 7/04; B67D 7/40; B67D 7/78; B67D 7/62; B67D 7/348;
(Continued)

(56) **References Cited**

U.S. PATENT DOCUMENTS

2,340,070 A 1/1944 McCauley et al.
2,516,150 A 7/1950 Samiran
(Continued)

FOREIGN PATENT DOCUMENTS

DE 1147397 4/1963
DE 20106400 10/2001
(Continued)

OTHER PUBLICATIONS

Oilfield Business: Technologies. Frac Shack Inc. introduces world's first Bi-Fuel Distribution Unit for hydraulic fracturing industry. Texas Oil & Gas: The National Magazine for Oil & Gas in Texas. vol. 4, Issue 2. 2015. p. 27.
(Continued)

Primary Examiner — Nicolas A Arnett
(74) *Attorney, Agent, or Firm* — Carlson, Gaskey & Olds, P.C.

(57) **ABSTRACT**

A distribution station includes a container, a pump, first and second manifolds fluidly connected with the pump, reels, hoses, valves, fluid level sensors, and a controller. Each hose is connected with a different one of the reels. A portion of the reels are connected to be fed from the first manifold and another portion of the reels are connected to be fed from the second manifold. Each valve is situated between one of the first or second manifolds and a respective different one of the reels. Each fluid level sensor is associated with a different one of the hoses. The controller is configured to individually open and close the valves responsive to the fluid level sensors.

20 Claims, 5 Drawing Sheets

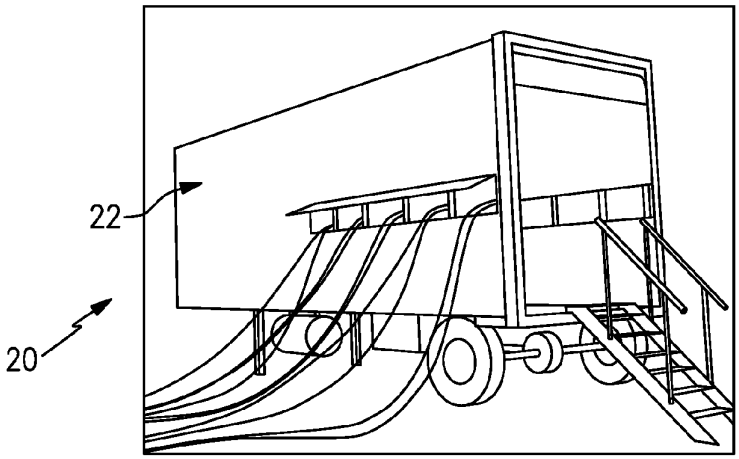

Related U.S. Application Data

continuation of application No. 15/416,198, filed on Jan. 26, 2017, now Pat. No. 9,932,220, which is a continuation of application No. 15/290,371, filed on Oct. 11, 2016, now Pat. No. 9,586,805.

(51) **Int. Cl.**

B67D 7/40	(2010.01)
B60P 3/035	(2006.01)
B67D 7/62	(2010.01)
B67D 7/78	(2010.01)
B62D 63/08	(2006.01)
E21B 43/26	(2006.01)
B67D 7/34	(2010.01)
B67D 7/14	(2010.01)

(52) **U.S. Cl.**
CPC ***B67D 7/40*** (2013.01); ***B67D 7/62*** (2013.01); ***B67D 7/78*** (2013.01); *B67D 7/145* (2013.01); *B67D 7/348* (2013.01); *E21B 43/26* (2013.01)

(58) **Field of Classification Search**
CPC B67D 7/145; B62D 63/08; B60P 3/035; E21B 43/26
See application file for complete search history.

(56) **References Cited**

U.S. PATENT DOCUMENTS

2,769,572	A	11/1956	Harman et al.
2,777,461	A	1/1957	Wildhaber
2,966,921	A	1/1961	Whiteman
3,028,010	A	4/1962	Headrick
3,136,295	A	6/1964	Gramo
3,547,141	A	12/1970	Alexander
3,605,798	A	9/1971	Green et al.
3,618,643	A	11/1971	Thomson
3,625,399	A	12/1971	Heisler
3,677,284	A	7/1972	Mendez
3,881,509	A	5/1975	Newton
4,139,019	A	2/1979	Bresie et al.
4,284,210	A	8/1981	Horak
4,511,311	A	4/1985	Olson
4,591,115	A	5/1986	DeCarlo
4,651,788	A	3/1987	Grosskreuz et al.
4,728,005	A	3/1988	Jacobs et al.
4,930,665	A	6/1990	Devine
5,406,988	A	4/1995	Hopkins
5,454,408	A	10/1995	DiBella et al.
5,465,766	A	11/1995	Siegele et al.
5,503,199	A	4/1996	Whitley, II et al.
5,538,051	A	7/1996	Brown et al.
5,551,309	A	9/1996	Goossens et al.
5,651,400	A	7/1997	Corts et al.
5,660,358	A	8/1997	Grafwallner et al.
5,708,424	A	1/1998	Orlando et al.
5,749,339	A	5/1998	Graham et al.
5,927,603	A	7/1999	McNabb
5,884,675	A	12/1999	Krasnov
6,098,646	A	8/2000	Hennemann et al.
6,206,056	B1	3/2001	Lagache
6,564,615	B1	5/2003	Carter
6,601,000	B1	7/2003	Barlian et al.
6,651,706	B2	11/2003	Litt
6,697,705	B2	2/2004	Johnson et al.
6,755,225	B1	6/2004	Niedwiecki et al.
6,761,194	B1	7/2004	Blong
6,779,569	B1	8/2004	Teer, Jr. et al.
6,786,245	B1	9/2004	Eichelberger et al.
7,063,276	B2	6/2006	Newton
7,106,026	B2	9/2006	Moore
7,353,808	B2	4/2008	Kakoo
7,415,995	B2	8/2008	Plummer et al.
7,458,543	B2	12/2008	Cutler et al.
7,568,507	B2	8/2009	Farese et al.
7,602,143	B2	12/2009	Capizzo
7,628,182	B2	12/2009	Poulter
7,937,215	B2	5/2011	Humphrey
7,938,151	B2	5/2011	Hockner
8,448,750	B2	5/2013	Gaugush et al.
9,346,662	B2	5/2016	Van Vliet et al.
9,371,830	B2	6/2016	Moffitt, Jr.
9,371,831	B2	6/2016	Moffitt, Jr.
9,586,805	B1	3/2017	Shock
9,815,683	B1 *	11/2017	Kalala B67D 7/3218
9,932,220	B1 *	4/2018	Shock B67D 7/40
9,981,840	B2 *	5/2018	Shock B67D 7/465
10,087,065	B2 *	10/2018	Shock B67D 7/845
10,150,662	B1 *	12/2018	Shock B67D 7/84
10,196,258	B2 *	2/2019	Kalala B67D 7/08
10,494,251	B2 *	12/2019	Shock B67D 7/845
10,633,243	B2 *	4/2020	Shock B65H 75/4402
10,759,649	B2 *	9/2020	Haile B67D 7/04
2001/0017815	A1	8/2001	Ackermann et al.
2005/0109561	A1	5/2005	Chopra
2007/0079891	A1	4/2007	Farese et al.
2007/0164031	A1	7/2007	Holz
2007/0181212	A1	8/2007	Fell
2016/0076533	A1	3/2016	Moffitt, Jr.

FOREIGN PATENT DOCUMENTS

DE	10309307	9/2004
DE	102006025025	12/2006
DE	102006038652	2/2008
EP	0161042	11/1985
EP	0433041	6/2001
GB	2485832	5/2012
RU	28347	3/2003
RU	91135	1/2010
RU	2452668	1/2012
SU	949644	8/1982
WO	0177006	10/2001
WO	03029721	4/2003
WO	03093118	11/2003
WO	2006005686	1/2006
WO	2006116572	11/2006
WO	2007087849	8/2007
WO	2008083830	7/2008
WO	2009026607	3/2009
WO	20090608065	6/2009

OTHER PUBLICATIONS

Frac Shack International. Publications & Endorsements. Retrieved Aug. 23, 2016 from: http://www.fracshack.com.
Frac Shack International. Technology. Retrieved Aug. 23, 2016 from: http://www.fracshack.com.
Frac Shack International. Design Benefits. Retrieved Aug. 23, 2016 from: http://www.fracshack.com.
Frac Shack International. Service. Retrieved Aug. 23, 2016 from: http://www.fracshack.com.
Frac Shack International. Frac Shack Series—Series A. Retrieved Aug. 23, 2016 from: http://www.fracshack.com.
Frac Shack International. Frac Shack Series—Series B. Retrieved Aug. 23, 2016 from: http://www.fracshack.com.
Frac Shack International. Frac Shack Series—Series C. Retrieved Aug. 23, 2016 from: http://www.fracshack.com.
Frac Shack International. Frac Shack Series—Series D. Retrieved Aug. 23, 2016 from: http://www.fracshack.com.
Frac Shack International. Frac Shack Series—Series E. Retrieved Aug. 23, 2016 from: http://www.fracshack.com.
Frac Shack International. Frac Shack Series—Series EG. Retrieved Aug. 23, 2016 from: http://www.fracshack.com.
Mann Tek. Dry Disconnect Couplings. Retrieved Jul. 22, 2016 from: http://www.manntek.com/products/drydisconnectcouplings p. 1-4.
Mann Tek. Dry Aviation Couplings. Retrieved Jul. 22, 2016 from: http://www.manntek.com/products/dryaviationcouplings p. 1-4.

(56) **References Cited**

OTHER PUBLICATIONS

Water, J. (2013). Better Safe than Sorry: Frac Shack a welcome addition to the oil patch. Jan. 2, 2013. Retrieved Aug. 23, 2016 from: http://www.pipelinenewsnorth.ca/better-safe-than-sorry-1.1123066.
Shimazaki, H. (1986). Development of centralized fueling and management system of kerosene heating machine. Nisseki Technical Review, vol. 28(4). Jul. 1986. pp. 184-188.
Technical Document. Surface vehicle standard. SAE International. Sep. 2014. pp. 1-5.

* cited by examiner

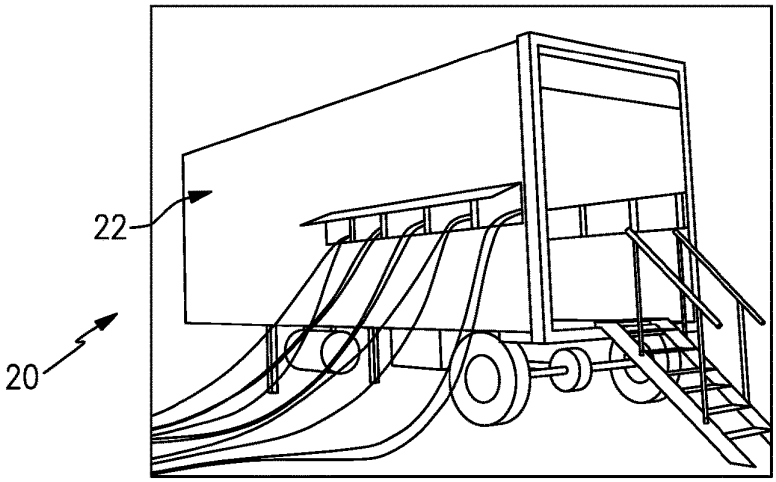
22
20

FIG.1

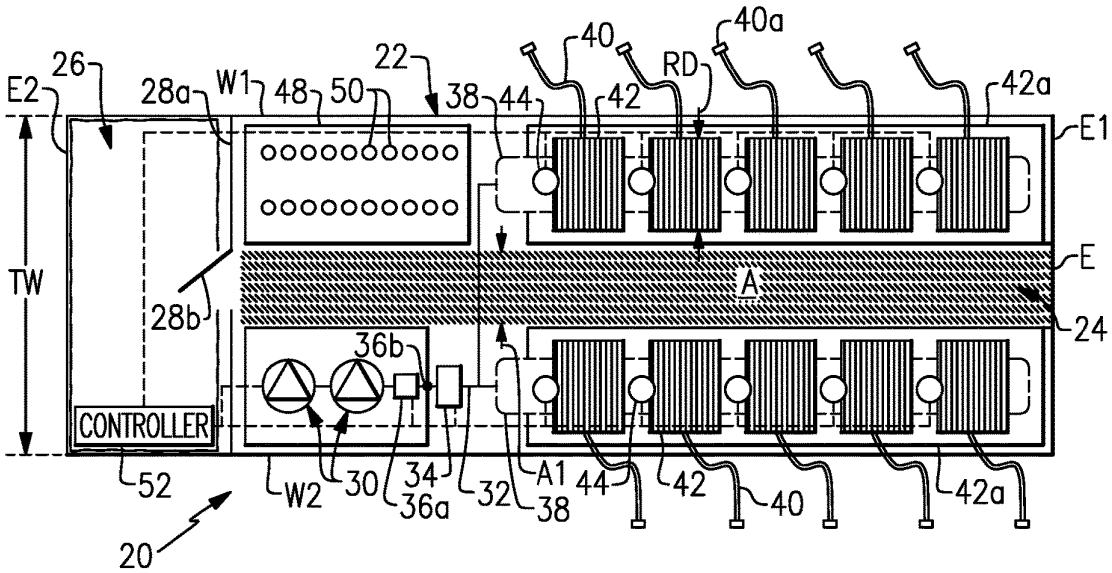
E2
26
28a
W1
48
50
22
38
44
40
42
RD
40a
42a
E1
TW
28b
A
E
24
36b
CONTROLLER
52
W2
30
34
36a
32
A1
38
44
42
40
42a
20

FIG.2

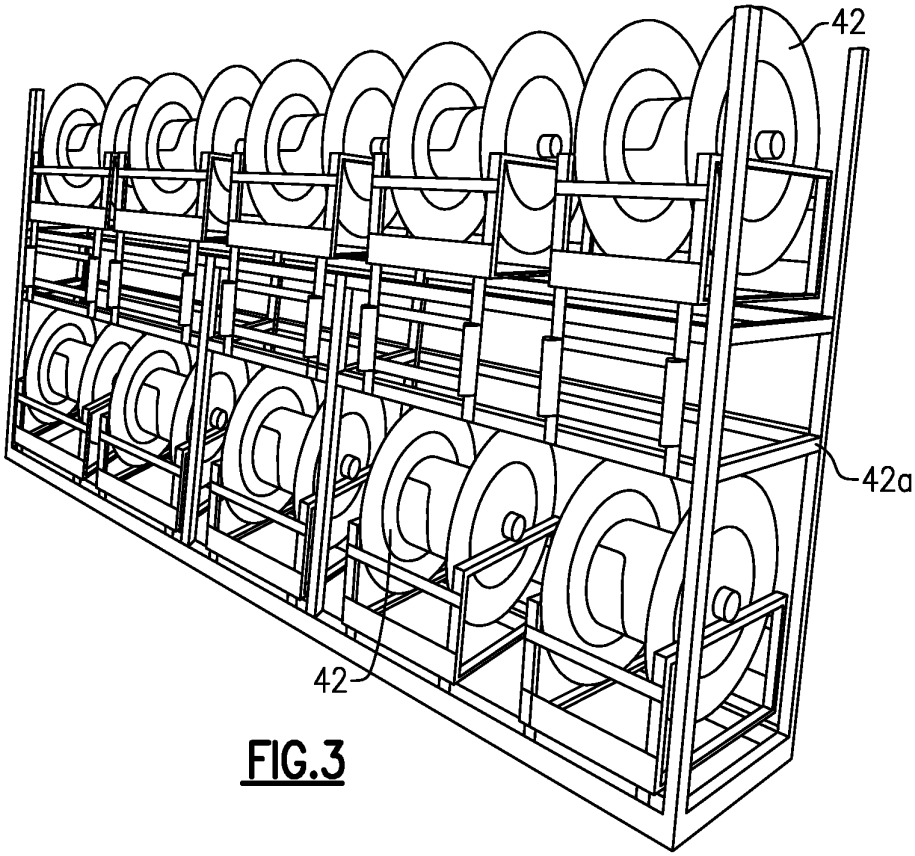

FIG.3

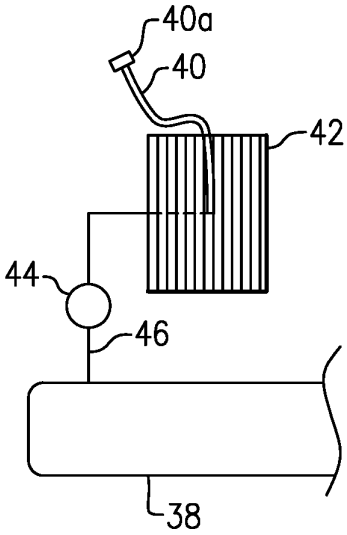

FIG.4

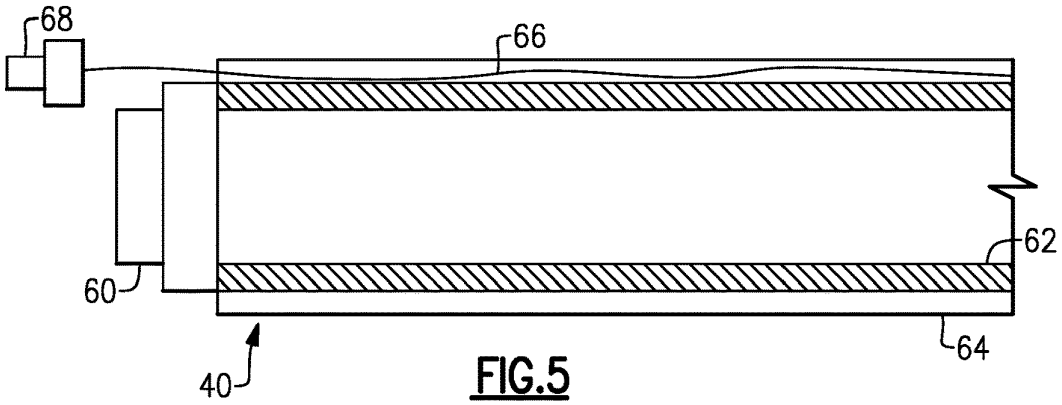

FIG.5

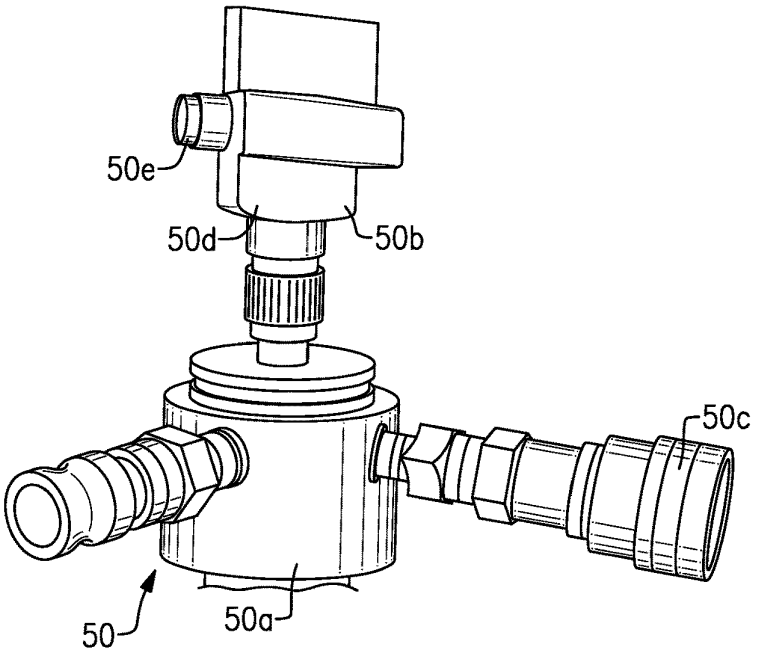

FIG.6

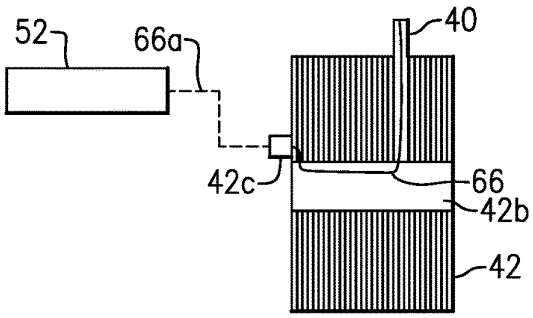

FIG.7

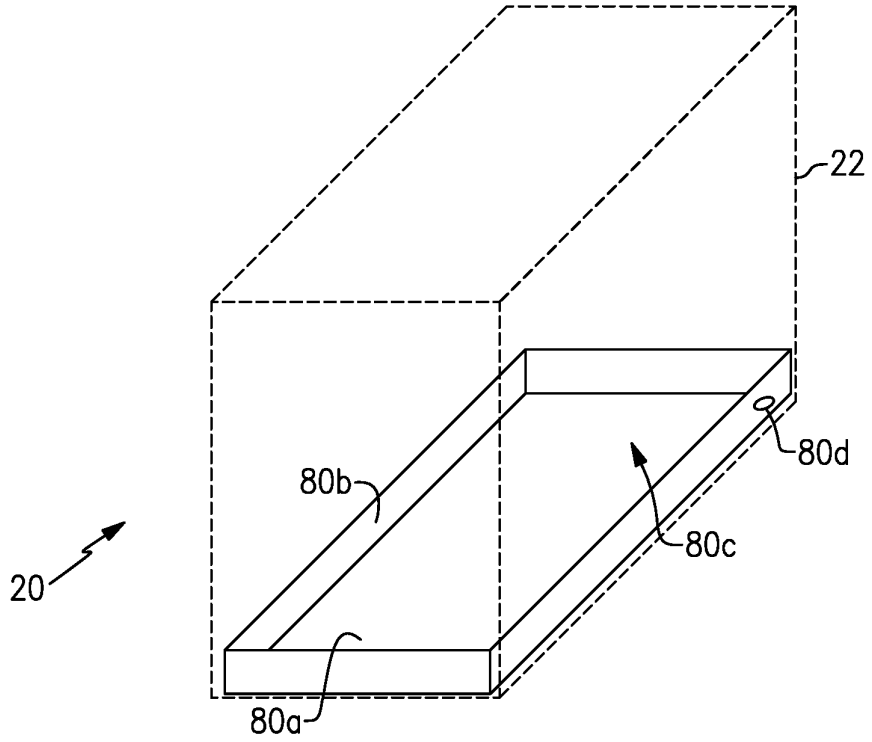

FIG.8

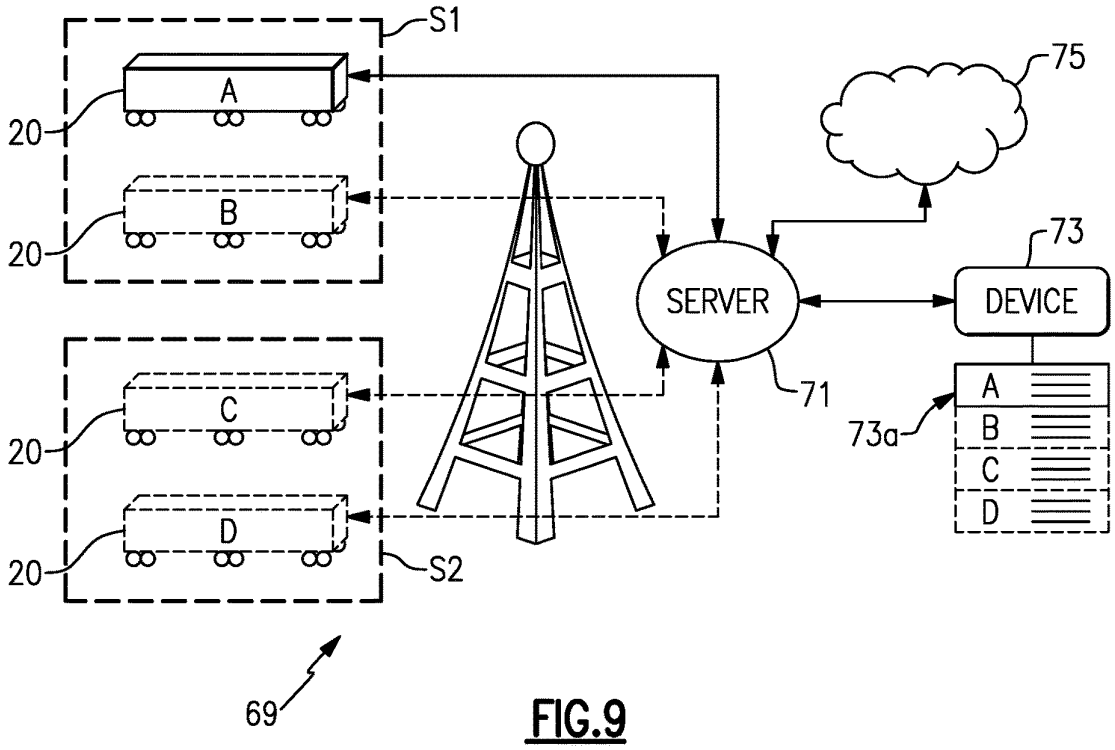

FIG.9

MOBILE DISTRIBUTION STATION FOR FLUID DISPENSING

CROSS-REFERENCE TO RELATED APPLICATION

The present disclosure is a continuation of U.S. patent application Ser. No. 15/890,584, filed Feb. 7, 2018, which is a continuation of U.S. patent application Ser. No. 15/416,198, filed Jan. 26, 2017, now issued as U.S. Pat. No. 9,932,220, which is a continuation of U.S. patent application Ser. No. 15/290,371, filed Oct. 11, 2016, which is now issued as U.S. Pat. No. 9,586,805.

BACKGROUND

Hydraulic fracturing (also known as fracking) is a well-stimulation process that utilizes pressurized liquids to fracture rock formations. Pumps and other equipment used for hydraulic fracturing typically operate at the surface of the well site. The equipment may operate semi-continuously, until refueling is needed, at which time the equipment may be shut-down for refueling. Shut-downs are costly and reduce efficiency. More preferably, to avoid shut-downs fuel is replenished in a hot-refueling operation while the equipment continues to run. This permits fracking operations to proceed fully continuously; however, hot-refueling can be difficult to reliably sustain for the duration of the fracking operation.

SUMMARY

A distribution station according to an example of the present disclosure includes a container that has first and second opposed side walls that join first and second opposed end walls, a pump, first and second manifolds fluidly connected with the pump, reels, hoses, valves, fluid level sensors, and a controller. Each hose is connected with a different one of the reels. A portion of the reels are connected to be fed from the first manifold and another portion of the reels are connected to be fed from the second manifold. Each valve is situated between one of the first or second manifolds and a respective different one of the reels. Each fluid level sensor is associated with a different one of the hoses. The controller is configured to individually open and close the valves responsive to the fluid level sensors.

BRIEF DESCRIPTION OF THE DRAWINGS

The various features and advantages of the present disclosure will become apparent to those skilled in the art from the following detailed description. The drawings that accompany the detailed description can be briefly described as follows.

FIG. **1** illustrates an example mobile distribution station.

FIG. **2** illustrates an internal layout of a mobile distribution station.

FIG. **3** illustrates an isolated view of hose reels on a support rack used in a mobile distribution station.

FIG. **4** illustrates an example of a connection between a manifold, a control valve, and a reel.

FIG. **5** illustrates a sectioned view of an example hose for a mobile distribution station.

FIG. **6** illustrates an example of an integrated fuel cap sensor for a mobile distribution station.

FIG. **7** illustrates an example of the routing of a sensor communication line through a reel in a mobile distribution station.

FIG. **8** illustrates an example of a mobile distribution station with an integrated floor pan.

FIG. **9** illustrates a system that can be used to remotely monitor and manage one or more mobile distribution stations.

DETAILED DESCRIPTION

FIG. **1** illustrates a mobile distribution station **20** and FIG. **2** illustrates an internal layout of the station **20**. As will be described, the station **20** may serve in a "hot-refueling" capacity to distribute fuel to multiple pieces of equipment while the equipment is running, such as fracking equipment at a well site. As will be appreciated, the station **20** is not limited to applications for fracking or for delivering fuel. The examples herein may be presented with respect to fuel delivery, but the station **20** may be used in mobile delivery of other fluids, in other gas/petroleum recovery operations, or in other operations where mobile refueling or fluid delivery will be of benefit.

In this example, the station **20** includes a mobile trailer **22**. Generally, the mobile trailer **22** is elongated and has first and second opposed trailer side walls W**1** and W**2** that join first and second opposed trailer end walls E**1** and E**2**. Most typically, the trailer **22** will also have a closed top (not shown). The trailer side walls W**1**/W**2** define a trailer width, TW. The mobile trailer **22** may have wheels that permit the mobile trailer **22** to be moved by a vehicle from site to site to service different hot-refueling operations.

In this example, the mobile trailer **22** has two compartments. A first compartment **24** includes the physical components for distributing fuel, such as diesel fuel, and a second compartment **26** serves as an isolated control room for managing and monitoring fuel distribution. The compartments **24**/**26** are separated by an inside wall **28***a* that has an inside door **28***b*. The second compartment **26** may be insulated with a fire resistant or retardant material **26***a*. In the event of a fire threat, a worker may take cover in the second compartment **26**. The fire resistant or retardant material **26***a* may shield the second compartment and thus temporarily protect the worker under such circumstances. The second compartment **26** may include an auxiliary escape door to provide external egress from the trailer **22**. Thus, if needed, a worker may exit the trailer **22** other than by the first compartment **24**.

The first compartment **24** includes one or more pumps **30**. Fuel may be provided to the one or more pumps **30** from an external fuel source, such as a tanker truck on the site. On the trailer **22**, the one or more pumps **30** are fluidly connected via a fuel line **32** with a high precision register **34** for metering fuel. The fuel line **32** may include, but is not limited to, hard piping. In this example, the fuel line **32** includes a filtration and air eliminator system **36***a* and one or more sensors **36***b*. Although optional, the system **36***a* is beneficial in many implementations, to remove foreign particles and air from the fuel prior to delivery to the equipment. The one or more sensors **36***b* may include a temperature sensor, a pressure sensor, or a combination thereof, which assist in fuel distribution management.

The fuel line **32** is connected with one or more manifolds **38**. In the illustrated example, the station **20** includes two manifolds **38** that arranged on opposed sides of the compartment **24**. As an example, the manifolds **38** are elongated tubes that are generally larger in diameter than the fuel line

32 and that have at least one inlet and multiple outlets. Each hose **40** is wound, at least initially, on a reel **42** that is rotatable to extend or retract the hose **40** externally through one or more windows of the trailer **22**. Each reel **42** has a reel diameter RD, which is the outside diameter or dimension of the reel **42**. Most typically, all or substantially all of the reels **42** will be the same size and thus have a common reel diameter RD. Each reel **42** may have an associated motor to mechanically extend and retract the hose **40**.

As shown in an isolated view in FIG. **3**, the reels **42** are mounted on a support rack **42***a*. In this example, the support rack **42***a* is configured with upper and lower rows of reels **42**. For instance, a ratio of the number of reels **42** in the upper row to a number of reels in the lower row on the support rack **42***a* is 1:1. As an example, each row has five reels **42** such that each support rack **42***a* provides ten reels **42** and thus ten hoses **40**. There are two support racks **42***a* (FIG. **2**) arranged on opposed sides of the first compartment **24**. The reels **42** are thus likewise arranged on opposed sides of the first compartment **24** in the trailer **22**. The station **20** therefore can provide twenty hoses **40** in the illustrated arrangement, with ten hoses **40** deployable on each side of the station **20**. For instance, the first group of ten hoses **40** on one side of the compartment **24** are deployable from the first trailer side wall W**1** and the second group of ten hoses **40** are deployable from the second trailer side wall W**2**. As will be appreciated, fewer or additional reels and hoses may be used in alternative examples.

An aisle walkway (A) runs down the middle of the trailer **22**. In this example, the aisle walkway A runs between the support racks **42***a* from an outside door E to the inside door **28***b*. Most typically, the aisle walkway A will include the space or volume through which workers walk to operate the station **20**. The aisle walkway A has an aisle width A**1**. As an example, the aisle width A**1** is the largest constant width walkway down the trailer **22** adjacent at least the reels **42** that is not intruded upon by affixed equipment in the trailer **22**, such as the reels **42**, support racks **42***a*, other support structures, etc.

The size of the aisle width A can contribute to reducing the potential for undesired incidents. For instance, there may be two or three or more workers that walk up and down the aisle walkway A in connection with their job duties. The workers need space to potentially pass by each other in the aisle walkway A and carry equipment through the aisle walkway A without bumping into each other or into equipment affixed in the trailer **22**.

The aisle width A**1**, however, is not unlimited and is subject to space availability and other factors relating to the performance of the station **20**. For instance, the reel diameter RD relates to the lengths of hoses that can be stored on the reels **42**. A relatively large reel diameter RD can accommodate a long hose winding, while a relatively smaller reel diameter RD would only accommodate a shorter hose winding. Longer hoses potentially provide greater access to equipment on a site that is located farther from the station, but longer hoses require more space in a station than shorter hoses due to the size of the reel needed to wind the longer hose. There is thus a multi-faceted interplay between the size and number of reels, arrangement of reels, and size/location of an aisle.

In a middle aisle arrangement as with the aisle walkway A, the aisle width A**1** is greater than the reel diameter RD by a factor of at least 1.3. In a further example, the aisle width A**1** is greater than the reel diameter RD by a factor of at least 1.5, and the trailer width TW is no greater than about 96 inches.

Additionally or alternatively, in a further example, a ratio of the trailer width TW to the aisle width A**1** is no greater than 5. In a further example, the ratio of the trailer width TW to the aisle width A**1** is also greater than 2. In a further example, the ratio of the trailer width TW to the aisle width A**1** is also equal to or less than 4. In a further example, the trailer width TW is no greater than about 96 inches and the ratio of the trailer width TW to the aisle width A**1** is greater than 2 and no greater than 5. In a further example of any of the examples herein, the aisle width A**1** is between about 30 inches and about 38 inches. The parameters above provide good station performance in combination with good packaging in the trailer **22** and good aisle size for worker movement.

As shown in a representative example in FIG. **4**, each hose **40** is connected to a respective one of the reels **42** and a respective one of a plurality of control valves **44**. For example, a secondary fuel line **46** leads from the manifold **38** to the reel **42**. The control valve **44** is in the secondary fuel line **46**. The control valve **44** is movable between open and closed positions to selectively permit fuel flow from the manifold **38** to the reel **42** and the hose **40**. For example, the control valve **44** is a powered valve, such as a solenoid valve.

In the illustrated example, the first compartment **24** also includes a sensor support rack **48**. The sensor support rack **48** holds integrated fuel cap sensors **50** (when not in use), or at least portions thereof. When in use, each integrated fuel cap sensor **50** is temporarily affixed to a piece of equipment (i.e., the fuel tank of the equipment) that is subject to the hot-refueling operation. Each hose **40** may include a connector end **40***a* and each integrated fuel cap sensor **50** may have a corresponding mating connector to facilitate rapid connection and disconnection of the hose **40** with the integrated fuel cap sensor **50**. For example, the connector end **40***a* and mating connector on the integrated fuel cap sensor **50** form a hydraulic quick-connect.

At least the control valves **44**, pump or pumps **30**, sensor or sensors **36***b*, and register **34** are in communication with a controller **52** located in the second compartment **26**. As an example, the controller **52** includes software, hardware, or both that is configured to carry out any of the functions described herein. In one further example, the controller **52** includes a programmable logic controller with a touch-screen for user input and display of status data. For example, the screen may simultaneously show multiple fluid levels of the equipment that is being serviced.

When in operation, the integrated fuel cap sensors **50** are mounted on respective fuel tanks of the pieces of equipment that are subject to the hot-refueling operation. The hoses **40** are connected to the respective integrated fuel cap sensors **50**. Each integrated fuel cap sensor **50** generates signals that are indicative of the fuel level in the fuel tank of the piece of equipment on which the integrated fuel cap sensor **50** is mounted. The signals are communicated to the controller **52**.

The controller **52** interprets the signals and determines the fuel level for each fuel tank of each piece of equipment. In response to a fuel level that falls below a lower threshold, the controller **52** opens the control valve **44** associated with the hose **40** to that fuel tank and activates the pump or pumps **30**. The pump or pumps **30** provide fuel flow into the manifolds **38** and through the open control valve **44** and reel **42** such that fuel is provided through the respective hose **40** and integrated fuel cap sensor **50** into the fuel tank. The lower threshold may correspond to an empty fuel level of the fuel tank, but more typically the lower threshold will be a level above the empty level to reduce the potential that the

equipment completely runs out of fuel and shuts down. The controller **52** can also be programmed with a failsafe measure related to the operation of the fuel cap sensors **50**. As an example, once a control valve **44** is open, if the controller **52** does not detect a change in fuel level from the fuel cap sensor **50** associated with the control valve **44** within a preset time period, the controller **52** shuts the pump **30** off and closes the control valve **44**. Thus, if a hose **40** were to rupture, spillage of fuel is limited to the volume of fuel in the hose **40**. For instance, the preset time period may be three seconds, six seconds, ten seconds, or fifteen seconds, which may limit spillage to approximately fifteen gallons for a given size of hose.

The controller **52** also determines when the fuel level in the fuel tank reaches an upper threshold. The upper threshold may correspond to a full fuel level of the fuel tank, but more typically the upper threshold will be a level below the full level to reduce the potential for overflow. In response to reaching the upper threshold, the controller **52** closes the respective control valve **44** and ceases the pump or pumps **30**. If other control valves **44** are open or are to be opened, the pump or pumps **30** may remain on. The controller **52** can also be programmed with an electronic stop failsafe measure to prevent over-filling. As an example, once an upper threshold is reached on a first tank and the control valve **44** is closed, but the pump **30** is otherwise to remain on to fill other tanks, if the fuel level continues to rise in the first tank, the controller **52** shuts the pump **30** off.

Multiple control valves **44** may be open at one time, to provide fuel to multiple fuel tanks at one time. Alternatively, if there is demand for fuel from two or more fuel tanks, the controller **52** may sequentially open the control valves **44** such that the tanks are refueled sequentially. For instance, upon completion of refueling of one fuel tank, the controller **52** closes the control valve **44** of the hose **40** associated with that tank and then opens the next control valve **44** to begin refueling the next fuel tank. Sequential refueling may facilitate maintaining internal pressure in the manifold and fuel line **32** above a desired or preset pressure threshold to more rapidly deliver fuel. Similarly, the controller **52** may limit the number of control valves **44** that are open at any one instance in order to maintain the internal pressure in the manifold and fuel line **32** above a desired or preset threshold. The controller **52** may perform the functions above while in an automated operating mode. Additionally, the controller **52** may have a manual mode in which a user can control at least some functions through the PLC, such as starting and stopped the pump **30** and opening and closing control valves **44**. For example, manual mode may be used at the beginning of a job when initially filling tanks to levels at which the fuel cap sensors **50** can detect fuel and/or during a job if a fuel cap sensor **50** becomes inoperable. Of course, operating in manual mode may deactivate some automated functions, such as filling at the low threshold or stopping at the high threshold.

In addition to the use of the sensor signals to determine fuel level, or even as an alternative to use of the sensor signals, the refueling may be time-based. For instance, the fuel consumption of a given piece of equipment may be known such that the fuel tank reaches the lower threshold at known time intervals. The controller **52** is operable to refuel the fuel tank at the time intervals rather than on the basis of the sensor signals, although sensor signals may also be used to verify fuel level.

The controller **52** also tracks the amount of fuel provided to the fuel tanks. For instance, the register **34** precisely measures the amount of fuel provided from the pump or pumps **30**. As an example, the register **34** is an electronic register and has a resolution of about 0.1 gallons. The register **34** communicates measurement data to the controller **52**. The controller **52** can thus determine the total amount of fuel used to very precise levels. The controller **52** may also be configured to provide outputs of the total amount of fuel consumed. For instance, a user may program the controller **52** to provide outputs at desired intervals, such as by worker shifts or daily, weekly, or monthly periods. The outputs may also be used to generate invoices for the amount of fuel used. As an example, the controller **52** may provide a daily output of fuel use and trigger the generation of an invoice that corresponds to the daily fuel use, thereby enabling almost instantaneous invoicing.

In a further example, the integrated fuel cap sensors **50** are each hard-wired to the controller **52**. The term "hard-wired" or variations thereof refers to a wired connection between two components that serves for electronic communication there between, which here a sensor and a controller. The hard-wiring may facilitate providing more reliable signals from the integrated fuel cap sensors **50**. For instance, the many pieces of equipment, vehicles, workers, etc. at a site may communicate using wireless devices. The wireless signals may interfere with each other and, therefore, degrade communication reliability. Hard-wiring the integrated fuel cap sensors **50** to the controller **52** facilitates reduction in interference and thus enhances reliability.

In general, hard-wiring in a hot-refueling environment presents several challenges. For example, a site has many workers walking about and typically is located on rough terrain. Thus, as will be described below, each integrated fuel cap sensor **50** is hard-wired through the associated hose **40** to the controller **52**.

FIG. **5** illustrates a representative portion of one of the hoses **40** and, specifically, the end of the hose **40** that will be located at the fuel tank of the equipment being refueled. In this example, the hose **40** includes a connector **60** at the end for detachably connecting the hose **40** to the integrated fuel cap sensors **50**. The hose **40** is formed of a tube **62** and a sleeve **64** that circumscribes the tube **62**. As an example, the tube **62** may be a flexible elastomeric tube and the sleeve **64** may be a flexible fabric sleeve. The sleeve **64** is generally loosely arranged around the tube **62**, although the sleeve **64** may closely fit on the tube **62** to prevent substantial slipping of the sleeve **64** relative to the tube **62** during use and handling. Optionally, to further prevent slipping and/or to secure the sleeve **64**, bands may be tightened around the hose **40**. As an example, one or more steel or stainless steel bands can be provided at least near the ends of the hose **40**.

A plurality of sensor communication lines **66** (one shown) are routed with or in the respective hoses **40**. For instance, each line **66** may include a wire, a wire bundle, and/or multiple wires or wire bundles. In one further example, the line **66** is a low milli-amp intrinsic safety wiring, which serves as a protection feature for reducing the concern for operating electrical equipment in the presence of fuel by limiting the amount of thermal and electrical energy available for ignition. In this example, the line **66** is routed through the hose **40** between (radially) the tube **62** and the sleeve **64**. The sleeve **64** thus serves to secure and protect the line **66**, and the sleeve **64** may limit spill and spewing if there is a hose **40** rupture. In particular, since the line **66** is secured in the hose **40**, the line **66** does not present a tripping concern for workers. Moreover, in rough terrain environments where there are stones, sand, and other objects that could damage the line **66** if it were free, the sleeve **64** shields the line **66** from direct contact with such objects. In further

examples, the line **66** may be embedded or partially embedded in the tube **62** or the sleeve **64**.

In this example, the line **66** extends out from the end of the hose **40** and includes a connector **68** that is detachably connectable with a respective one of the integrated fuel cap sensors **50**. For example, FIG. **6** illustrates a representative example of one of the integrated fuel cap sensors **50**. The integrated fuel cap sensor **50** includes a cap portion **50***a* and a fluid level sensor portion **50***b*. The cap portion **50***a* is detachably connectable with a port of a fuel tank. The cap portion **50***a* includes a connector port **50***c*, which is detachably connectable with the connector **60** of the hose **40**. The sensor portion **50***b* includes a sensor **50***d* and a sensor port **50***e* that is detachably connectable with the connector **68** of the line **66**. The fuel cap sensor **50** may also include a vent port that attaches to a drain hose, to drain any overflow into a containment bucket and/or reduce air pressure build-up in a fuel tank. Thus, a user may first mount the cap portion **50***a* on the fuel tank of the equipment, followed by connecting the hose **40** to the port **50***c* and connecting the line **66** to the port **50***e*.

The sensor **50***d* may be any type of sensor that is capable of detecting fluid or fuel level in a tank. In one example, the sensor **50***d* is a guided wave radar sensor. A guided wave radar sensor may include a transmitter/sensor that emits radar waves, most typically radio frequency waves, down a probe. A sheath may be provided around the probe. For example, the sheath may be a metal alloy (e.g., stainless steel or aluminum) or polymer tube that surrounds the probe. One or more bushings may be provided between the probe and the sheath, to separate the probe from the sheath. The sheath shields the probe from contact by external objects, the walls of a fuel tank, or other components in a fuel tank, which might otherwise increase the potential for faulty sensor readings. The probe serves as a guide for the radar waves. The radar waves reflect off of the surface of the fuel and the reflected radar waves are received into the transmitter/sensor. A sensor controller determines the "time of flight" of the radar waves, i.e., how long it takes from emission of the radar waves for the radar waves to reflect back to the transmitter/sensor. Based on the time, the sensor controller, or the controller **52** if the sensor controller does not have the capability, determines the distance that the radar waves travel. A longer distance thus indicates a lower fuel level (farther away) and a shorter distance indicates a higher fuel level (closer).

The line **66** routes through the hose **40** and back to the reel **42** in the trailer **22**. For example, the line **66** is also routed or hard-wired through the reel **42** to the controller **52**. FIG. **7** illustrates a representative example of the routing in the reel **42**. In this example, the reel **42** includes a spindle **42***b* about which the reel is rotatable. The spindle **42***b* may be hollow, and the line **66** may be routed through the spindle **42***b*. The reel **42** may also include a connector **42***c* mounted thereon. The connector **42***c* receives the line **66** and serves as a port for connection with another line **66***a* to the controller **52**.

The lines **66***a* may converge to one or more communication junction blocks or "bricks" prior to the controller **52**. The communication junction blocks may serve to facilitate the relay of the signals back to the controller **52**. The communication junction blocks may alternatively or additionally serve to facilitate identification of the lines **66**, and thus the signals, with respect to which of the hoses a particular line **66** is associated with. For instance, a group of communication junction blocks may have unique identifiers and the lines **66** into a particular communication junction block may be associated with identifiers. A signal relayed into the controller **52** may thus be associated with the identifier of the communication junction blocks and a particular line **66** of that communication junction block in order to identify which hose the signal is to be associated with. The valves **44** may also communicate with the controller **52** in a similar manner through the communication junction blocks.

As illustrated in a further example in FIG. **8**, the station **20** may be further enhanced to reduce the potential for fluid or fuel escape. The trailer **22**, depicted here in phantom, includes a floor pan **80**. The floor pan **80** may be formed of metal, polymer, or combinations thereof and serves to reduce or prevent the escape of fluid or fuel from inside the trailer **22**. In comparison to a temporary, movable catch basin, the floor pan **80** is a permanent fixture in the trailer **22**, and may be structurally affixed in the trailer **22** by fasteners, adhesive, or the like.

As an example, the floor pan **80** includes a bottom **80***a* that joins sides **80***b* to define a container cavity **80***c*. For instance, the floor pan **80** lines the bottom portion of the trailer **22**. The bottom **80***a* and sides **80***b* seal the container cavity **80***c* such that any fluid or fuel that leaks in the trailer **22** is caught and contained in the floor pan **80**, to reduce the potential of spilling or leaking out from the trailer **22**. The floor pan **80** may line only the first compartment **24** or may line both the first and second compartments **24**/**26**. In alternative examples, the floor pan **80** may line only a portion of the trailer **22** where there is potential for leak or spill. Most typically, the floor pan **80** will cover a majority of the floor area of the trailer **22** or at least a majority of the first compartment **24**. In further examples, a ratio of the width of the floor pan **80** to the minimum height of the sides **80***b* is no less than 16 and may be up to about 50. In yet a further example, the cavity **80***c* of the floor pan **80** has a volume of approximately two-hundred gallons and the minimum height of the sides **80***b* is no less than two inches.

Optionally, the floor pan **80** may include one or more drain ports in the bottom **80***a*, sides **80***b*, or both, to permit controlled drainage of spilled fluid or fuel from the floor pan **80** into a catch container.

As can be appreciated from the examples herein, the station **20** permits continuous hot-refueling with enhanced reliability. While there might generally be a tendency to choose wireless sensor communication for convenience, a hard-wired approach mitigates the potential for signal interference that can arise with wireless. Moreover, by hard-wiring the sensors through the hoses to the controller, wired communication lines are protected from exposure and do not pose additional concerns for workers on a site. Additionally, the spatial layout of the station **20** permits enhanced station performance in combination with good packaging and aisle size for worker movement.

FIG. **9** illustrates a system **69** for remotely monitoring and/or managing at least one mobile distribution station **20** (A). It is to be appreciated that the system **69** may include additional mobile distribution stations, shown in phantom at **20** (B), **20** (C), and **20** (D) (collectively mobile distribution stations **20**), for example. The mobile distribution stations **20** may be located at a single work site or located across several different work sites S**1** and S**2**. Each mobile distribution station **20** is in communication with one or more servers **71** that are remotely located from the mobile distribution stations **20** and work sites S**1**/S**2**. In most implementations, the communication will be wireless.

The server **71** may include hardware, software, or both that is configured to perform the functions described herein.

The server **71** may also be in communication with one or more electronic devices **73**. The electronic device **73** is external of or remote from the mobile fuel distribution stations **20**. For example, the electronic device **73** may be, but is not limited to, a computer, such as a desktop or laptop computer, a cellular device, or tablet device. The electronic device **73** may communicate and interact in the system **69** via data connectivity, which may involve internet connectivity, cellular connectivity, software, mobile application, or combinations of these.

The electronic device **73** may include a display **73***a,* such as an electronic screen, that is configured to display the fuel operating parameter data of each of the mobile distribution stations **20**. As an example, the electronic device **73** may display in real-time the operating parameter data of each of the mobile distribution stations **20** in the system **69** to permit remote monitoring and management control of the mobile distribution stations **20**. For instance, the operating parameter data may include fuel temperature, fuel pressure, fuel flow, total amount of fuel distributed, operational settings (e.g., low and high fuel level thresholds), or other parameters.

The server **71** may also be in communication with one or more cloud-based devices **75**. The cloud-based device **75** may include one or more servers and a memory for communicating with and storing information from the server **71**.

The server **71** is configured to communicate with the mobile distribution stations **20**. Most typically, the server **71** will communicate with the controller **52** of the mobile distribution station **20**. In this regard, the controller **52** of each mobile distribution station **20** may be include hardware, software, or both that is configured for external communication with the server **71**. For example, each controller **52** may communicate and interact in the system **69** via data connectivity, which may involve internet connectivity, cellular connectivity, software, mobile application, or combinations of these.

The server **71** is configured to receive operating parameter data from the mobile distribution stations **20**. The operating parameter data may include or represent physical measurements of operating conditions of the mobile distribution station **20**, status information of the mobile distribution station **20**, setting information of the mobile distribution station **20**, or other information associated with control or management of the operation of the mobile distribution station **20**.

For example, the server **71** utilizes the information to monitor and auto-manage the mobile distribution station **20**. The monitoring and auto-management may be for purposes of identifying potential risk conditions that may require shutdown or alert, purposes of intelligently enhancing operation, or purposes of reading fuel or fluid levels in real-time via the sensors **50**. As an example, the server **71** may utilize the information to monitor or display fuel or fluid levels, or determine whether the fuel operating parameter data is within a preset limit and send a control action in response to the operating parameter data being outside the preset limit. As will described in further detail below, the control action may be a shutdown instruction to the mobile fuel distribution stations **20**, an adjustment instruction to the mobile fuel distribution stations **20**, or an alert to the electronic device **73**.

Although a combination of features is shown in the illustrated examples, not all of them need to be combined to realize the benefits of various embodiments of this disclosure. In other words, a system designed according to an embodiment of this disclosure will not necessarily include all of the features shown in any one of the Figures or all of the portions schematically shown in the Figures. Moreover, selected features of one example embodiment may be combined with selected features of other example embodiments.

The preceding description is exemplary rather than limiting in nature. Variations and modifications to the disclosed examples may become apparent to those skilled in the art that do not necessarily depart from this disclosure. The scope of legal protection given to this disclosure can only be determined by studying the following claims.

What is claimed is:

1. A distribution station comprising:

a container including first and second opposed side walls that join first and second opposed end walls;

a pump in the container;

first and second manifolds in the container and fluidly connected with the pump;

a plurality of reels in the container;

a plurality of hoses, each said hose connected with a different one of the reels, wherein a portion of the reels are connected to be fed from the first manifold and another portion of the reels are connected to be fed from the second manifold;

a plurality of valves in the container, each said valve situated between one of the first or second manifolds and a respective different one of the reels;

a plurality of fluid level sensors, each said fluid level sensor being associated with a different one of the hoses; and

a controller configured to individually open and close the valves responsive to the fluid level sensors.

2. The distribution station as recited in claim **1**, wherein the reels are arranged on first and second opposed sides in the container.

3. The distribution station as recited in claim **2**, further comprising an aisle walkway down the middle of the container between the reels on the first and second opposed sides in the container.

4. The distribution station as recited in claim **3**, further comprising a floor pan in the container.

5. The distribution station as recited in claim **1**, wherein the reels on each of the first and second opposed sides are arranged in upper and lower rows of reels.

6. The distribution station as recited in claim **1**, further comprising a register configured to measure an amount of fluid from the pump.

7. The distribution station as recited in claim **6**, wherein the register is in communication with the controller.

8. The distribution station as recited in claim **7**, wherein the controller is configured to track the amount of fluid provided from the pump over a selected time interval.

9. The distribution station as recited in claim **8**, wherein the controller is configured to trigger generation of an invoice for the amount of fluid.

10. The distribution station as recited in claim **8**, wherein the register is an electronic register that has a resolution of about 0.1 gallons.

11. A distribution station comprising:

a container including first and second opposed side walls that join first and second opposed end walls;

at least one pump in the container;

at least one manifold in the container and fluidly connected with the at least one pump;

a plurality of reels in the container, each said reel individually connected with the at least one manifold;

a plurality of hoses, each said hose connected with a different one of the reels;

a plurality of valves in the container, each said valve situated between the at least one manifold and a respective different one of the reels;

a plurality of fluid level sensors, each said fluid level sensor connectable to an end of a different one of the hoses; and

a controller configured to individually open and close the valves responsive to the fluid level sensors.

12. The distribution station as recited in claim **11**, wherein the at least one pump includes two pumps.

13. The distribution station as recited in claim **12**, wherein the two pumps are arranged in fluid series.

14. The distribution station as recited in claim **11**, further comprising a register configured to measure an amount of fluid from the pump.

15. The distribution station as recited in claim **14**, wherein the register is in communication with the controller.

16. The distribution station as recited in claim **15**, wherein the controller is configured to track the amount of fluid provided from the pump over a selected time interval.

17. The distribution station as recited in claim **16**, wherein the controller is configured to trigger generation of an invoice for the amount of fluid.

18. The distribution station as recited in claim **16**, wherein the register is an electronic register that has a resolution of about 0.1 gallons.

19. A distribution station comprising:

a container including first and second opposed side walls that join first and second opposed end walls;

at least one pump in the container;

at least one manifold in the container and fluidly connected with the at least one pump;

a register between the at least one pump and the at least one manifold;

a plurality of reels in the container and connected with the at least one manifold;

a plurality of hoses, each said hose connected with a different one of the reels;

a plurality of valves in the container, each said valve situated between the at least one manifold and a respective different one of the reels;

a plurality of fluid level sensors, each said fluid level sensor being associated with a different one of the hoses; and

a controller configured to individually open and close the valves responsive to the fluid level sensors.

20. The distribution station as recited in claim **19**, wherein the register is configured to generate measurement data representative of an amount of fluid provided from the at least one pump, and the register is in communication with the controller to send the measurement data to the controller.

* * * * *

US009586805B1

(12) **United States Patent**
Shock

(10) **Patent No.: US 9,586,805 B1**
(45) **Date of Patent: Mar. 7, 2017**

(54) **MOBILE DISTRIBUTION STATION WITH AISLE WALKWAY**

(71) Applicant: **Fuel Automation Station, LLC**, Birmingham, MI (US)

(72) Inventor: **Ricky Dean Shock**, Victoria, TX (US)

(73) Assignee: **FUEL AUTOMATION STATION, LLC**, Birmingham, MI (US)

(*) Notice: Subject to any disclaimer, the term of this patent is extended or adjusted under 35 U.S.C. 154(b) by 0 days.

(21) Appl. No.: **15/290,371**

(22) Filed: **Oct. 11, 2016**

(51) **Int. Cl.**

B65B 37/00	(2006.01)
B67D 7/40	(2010.01)
B62D 63/08	(2006.01)
B60P 3/035	(2006.01)
B60P 3/00	(2006.01)
B67D 7/62	(2010.01)
B67D 7/78	(2010.01)
B67D 7/84	(2010.01)
E21B 43/26	(2006.01)

(52) **U.S. Cl.**
CPC ***B67D 7/40*** (2013.01); ***B60P 3/00*** (2013.01); ***B60P 3/035*** (2013.01); ***B62D 63/08*** (2013.01); ***B67D 7/62*** (2013.01); ***B67D 7/78*** (2013.01); ***B67D 7/845*** (2013.01); *E21B 43/26* (2013.01)

(58) **Field of Classification Search**
CPC ... B67D 7/38; B67D 7/84; B67D 7/40; B67D 7/845; B67D 7/465; B67D 7/3218; B67D 7/36; B60P 3/065
See application file for complete search history.

(56) **References Cited**

U.S. PATENT DOCUMENTS

2,516,150	A	7/1950	Samiran
2,769,572	A	11/1956	Harman et al.

(Continued)

FOREIGN PATENT DOCUMENTS

GB	2485832	5/2012
WO	0177006	10/2001

(Continued)

OTHER PUBLICATIONS

Oilfield Business: Technologies. Frac Shack Inc. introduces world's first Bi-Fuel Distribution Unit for hydraulic fracturing industry. Texas Oil & Gas: The National Magazine for Oil & Gas in Texas. vol. 4, Issue 2. 2015. p. 27.

(Continued)

Primary Examiner — Jason K Niesz
(74) *Attorney, Agent, or Firm* — Carlson, Gaskey & Olds, P.C.

(57) **ABSTRACT**

A distribution station includes a mobile trailer, a pump on the mobile trailer, first and second manifolds on the mobile trailer and fluidly connected with the pump, a plurality of hoses, a plurality of reels, a plurality of valves, and a plurality of fluid level sensors. The hoses are connected with the reels. A portion of the reels are connected with the first manifold and another portion of the reels are connected with the second manifold. Each of the valves is situated between one of the first or second manifolds and a respective different one of the hoses. Each of the fluid level sensors is associated with a respective different one of the hoses. The reels are arranged on first and second opposed sides in the mobile trailer, with an aisle walkway down the middle of the mobile trailer.

22 Claims, 19 Drawing Sheets

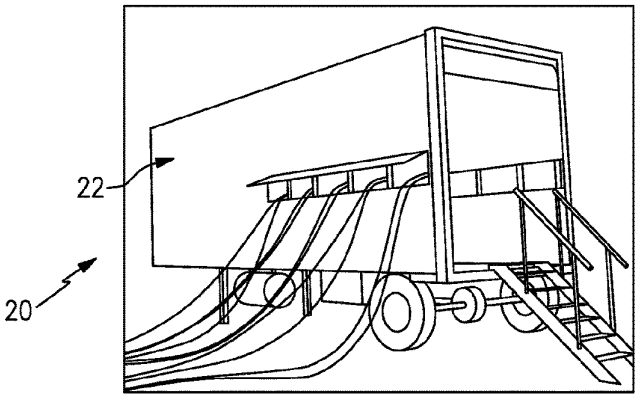

(56) **References Cited**

U.S. PATENT DOCUMENTS

2,777,461	A	1/1957	Wildhaber	
3,028,010	A	4/1962	Headrick	
3,136,295	A	6/1964	Gramo	
3,547,141	A	12/1970	Alexander	
3,618,643	A	11/1971	Thomson	
4,139,019	A	2/1979	Bresie et al.	
4,591,115	A	5/1986	DeCarlo	
4,930,665	A	6/1990	Devine	
5,406,988	A	4/1995	Hopkins	
5,454,408	A	10/1995	DiBella et al.	
5,503,199	A	4/1996	Whitley, II et al.	
5,538,051	A	7/1996	Brown et al.	
5,708,424	A	1/1998	Orlando et al.	
5,884,675	A	3/1999	Krasnov	
6,206,056	B1	3/2001	Lagache	
6,564,615	B1	5/2003	Carter	
6,651,706	B2	11/2003	Litt	
6,697,705	B2	2/2004	Johnson et al.	
6,755,225	B1	6/2004	Niedwiecki et al.	
6,761,194	B1	7/2004	Blong	
6,786,245	B1	9/2004	Eichelberger et al.	
7,063,276	B2	6/2006	Newton	
7,106,026	B2	9/2006	Moore	
7,353,808	B2	4/2008	Kakoo	
7,415,995	B2	8/2008	Plummer et al.	
7,458,543	B2	12/2008	Cutler et al.	
7,568,507	B2	8/2009	Farese et al.	
7,602,143	B2	10/2009	Capizzo	
7,628,182	B2	12/2009	Poulter	
7,938,151	B2	5/2011	Hockner	
9,346,662	B2	5/2016	Van Vliet et al.	
9,371,830	B2	6/2016	Moffitt, Jr.	
9,371,831	B2	6/2016	Moffitt, Jr.	
2007/0079891	A1	4/2007	Farese et al.	
2007/0164031	A1	7/2007	Holz	
2007/0181212	A1	8/2007	Fell	
2011/0197988	A1*	8/2011	Van Vliet	B67D 7/04 141/1
2016/0076533	A1	3/2016	Moffitt, Jr.	

FOREIGN PATENT DOCUMENTS

WO	2006005686	1/2006
WO	2008083830	7/2008
WO	2009026607	3/2009

OTHER PUBLICATIONS

Frac Shack International. Publications & Endorsements. Retrieved Aug. 23, 2016 from: http://www.fracshack.com.

Frac Shack International. Technology. Retrieved Aug. 23, 2016 from: http://www.fracshack.com.

Frac Shack International. Design Benefits. Retrieved Aug. 23, 2016 from: http://www.fracshack.com.

Frac Shack International. Service. Retrieved Aug. 23, 2016 from: http://www.fracshack.com.

Frac Shack International. Frac Shack Series—Series A. Retrieved Aug. 23, 2016 from: http://www.fracshack.com.

Frac Shack International. Frac Shack Series—Series B. Retrieved Aug. 23, 2016 from: http://www.fracshack.com.

Frac Shack International. Frac Shack Series—Series C. Retrieved Aug. 23, 2016 from: http://www.fracshack.com.

Frac Shack International. Frac Shack Series—Series D. Retrieved Aug. 23, 2016 from: http://www.fracshack.com.

Frac Shack International. Frac Shack Series—Series E. Retrieved Aug. 23, 2016 from: http://www.fracshack.com.

Frac Shack International. Frac Shack Series—Series EG. Retrieved Aug. 23, 2016 from: http://www.fracshack.com.

Mann Tek. Dry Disconnect Couplings. Retrieved Jul. 22, 2016 from: http://www.manntek.com/products/drydisconnectcouplings p. 1-4.

Mann Tek. Dry Aviation Couplings. Retrieved Jul. 22, 2016 from: http://www.manntek.com/products/dryaviationcouplings p. 1-4.

Water, J. (2013). Better Safe than Sorry: Frac Shack a welcome addition to the oil patch. Jan. 2, 2011 Retrieved Aug. 23, 2016 from: http://www.pipelinenewsnorth.ca/better-safe-than-sorry-1.1123066.

* cited by examiner

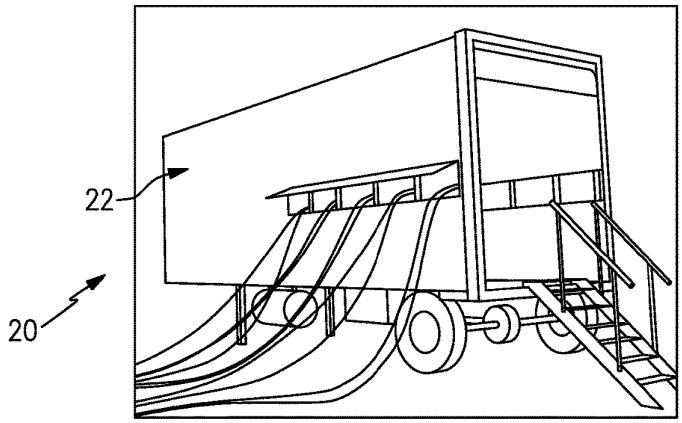
22
20

FIG.1

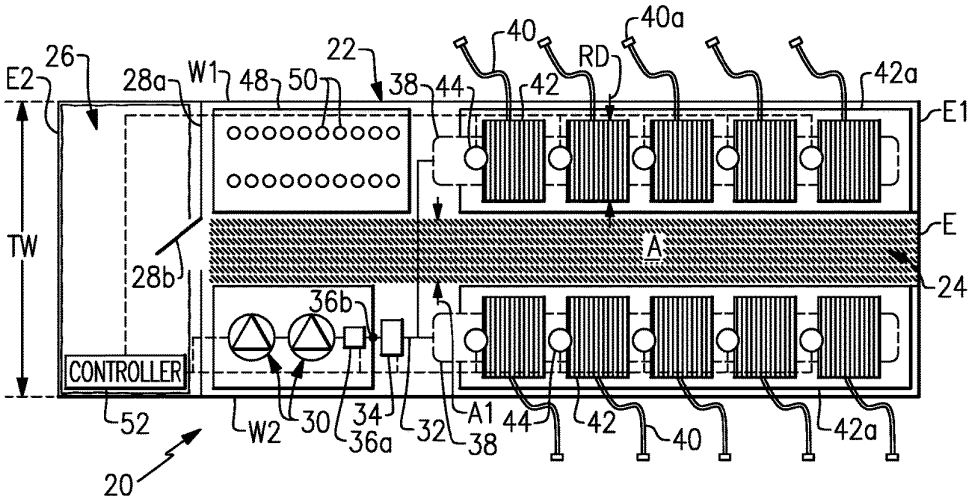
E2
26
28a
W1
48
50
22
38
44
40
42
RD
40a
42a
E1
TW
28b
36b
A
E
24
CONTROLLER
52
W2
30
34
36a
32
A1
38
44
42
40
42a
20

FIG.2

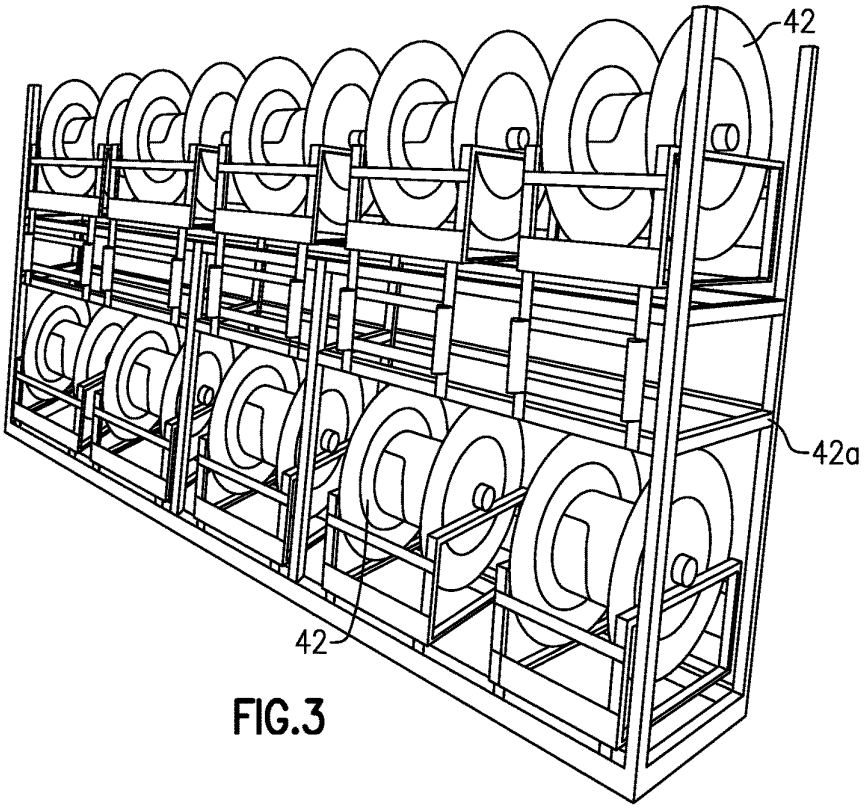

FIG.3

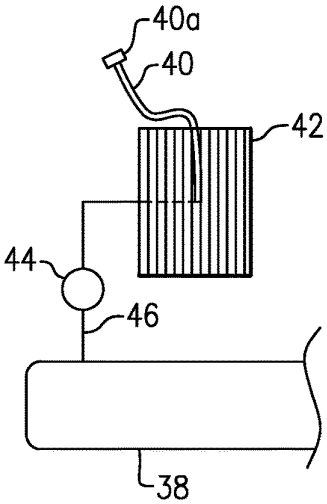

FIG.4

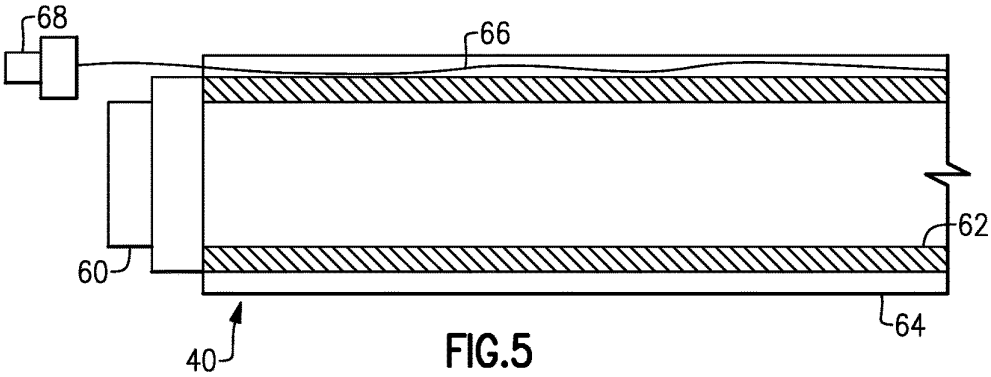

FIG.5

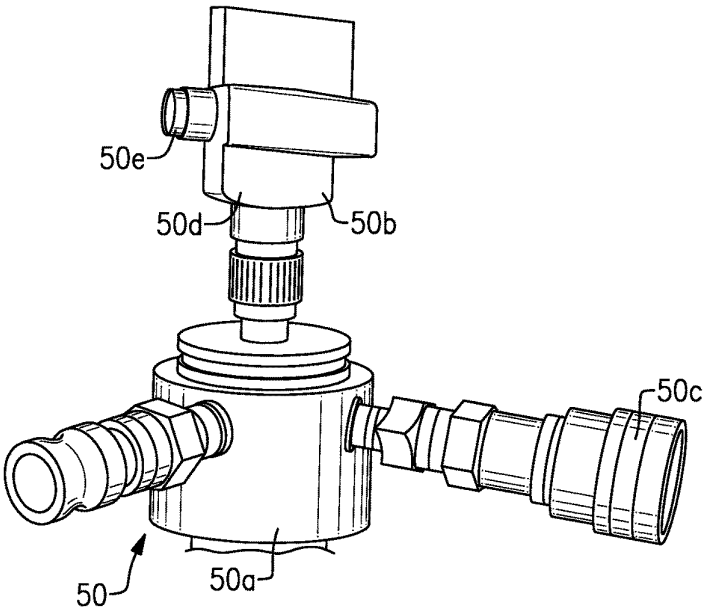

FIG.6

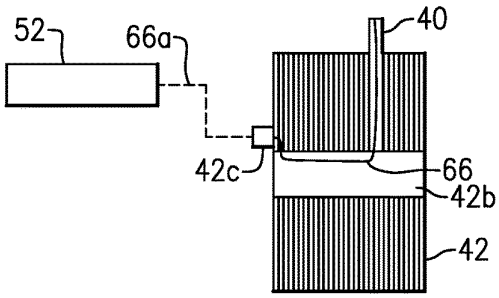

FIG.7

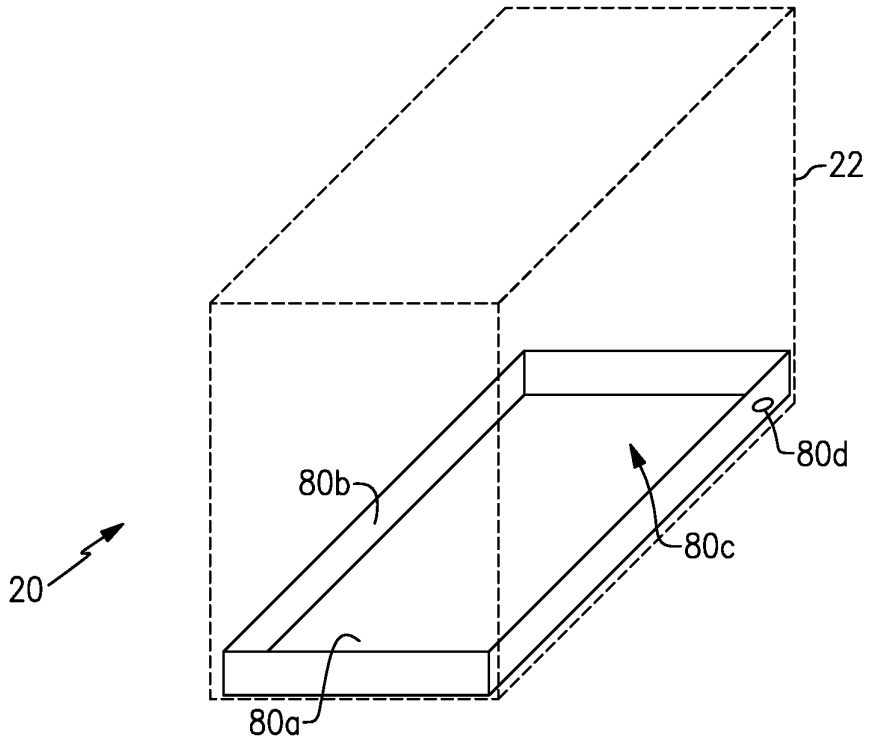

FIG.8

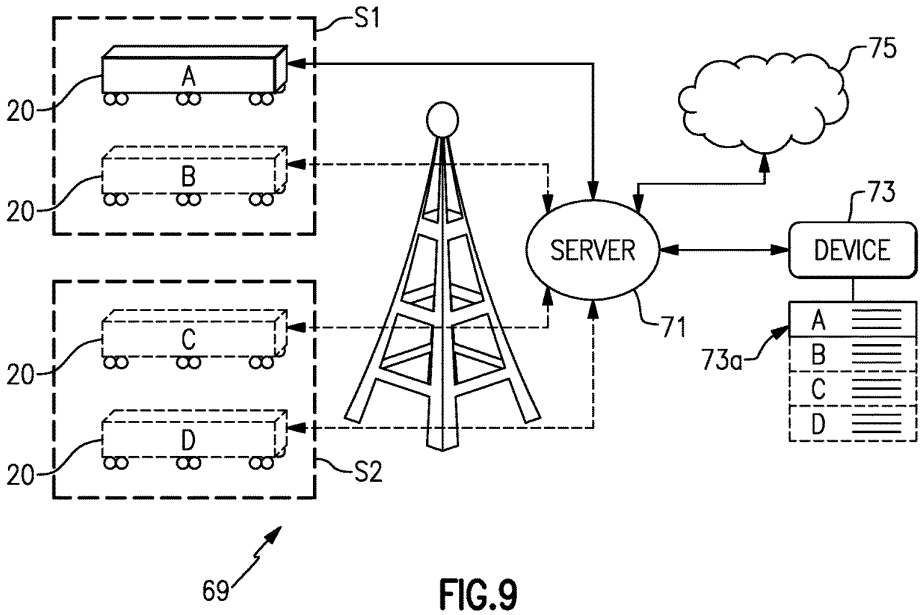

FIG.9

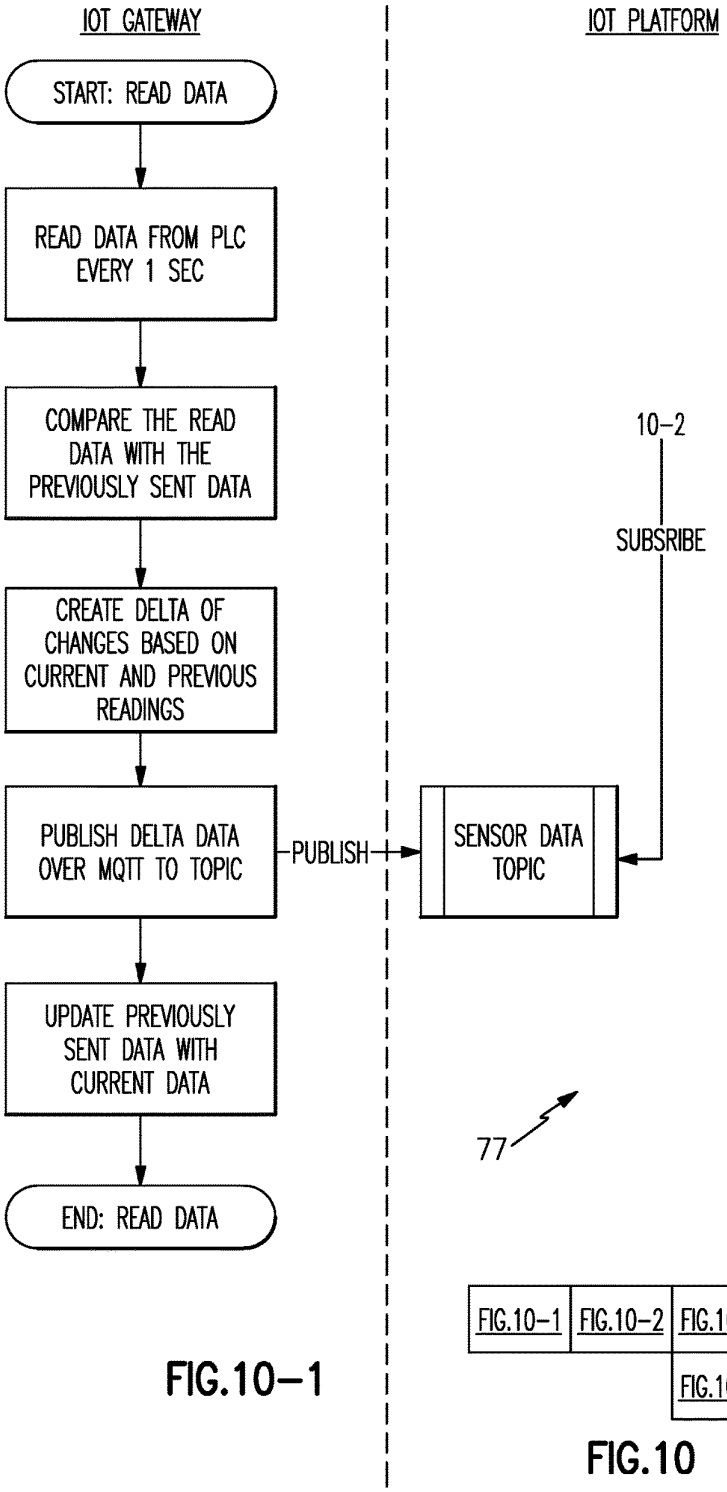

FIG.10-1

FIG.10-1	FIG.10-2	FIG.10-3	FIG.10-4
		FIG.10-6	FIG.10-5

FIG.10

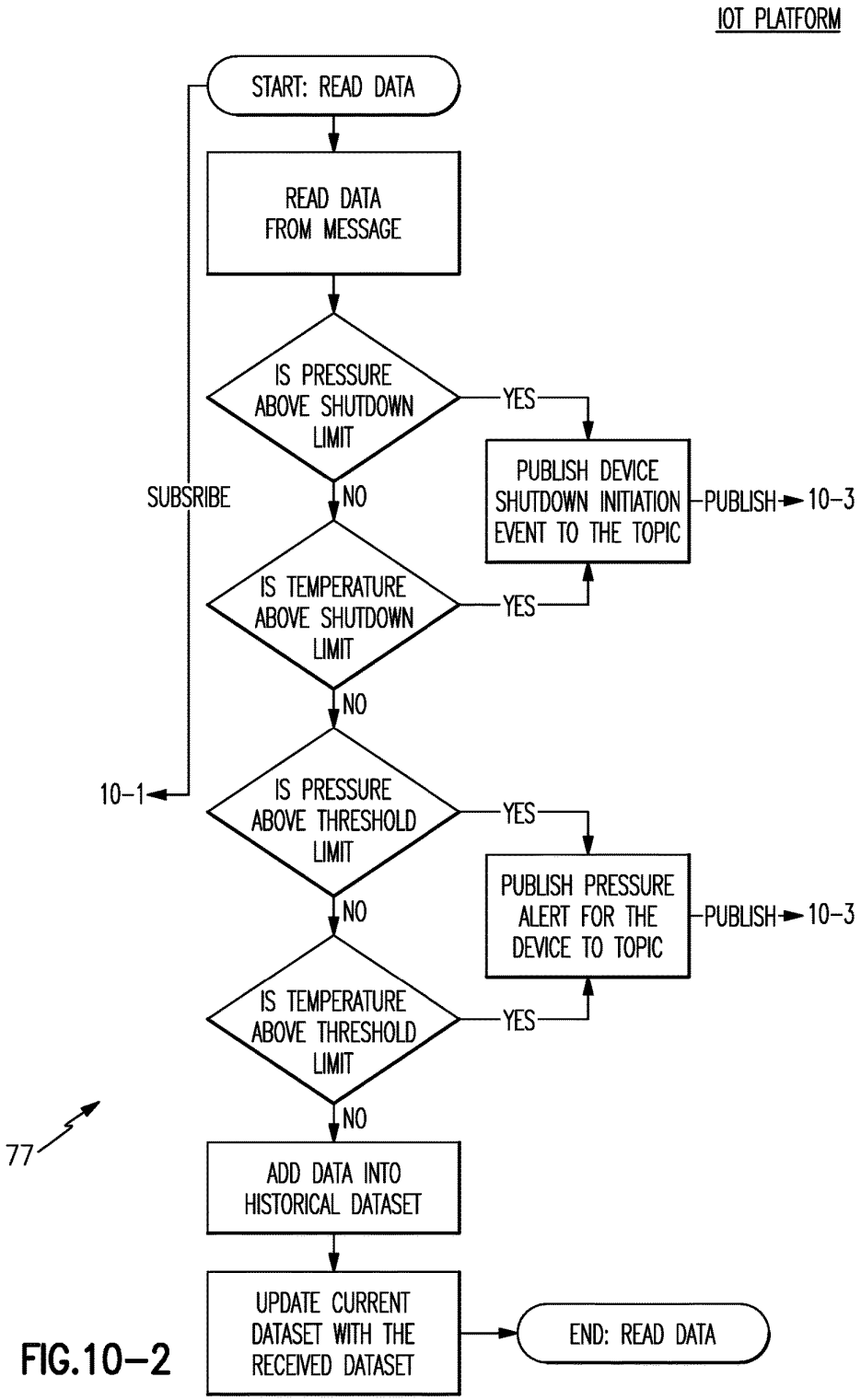
IOT PLATFORM
START: READ DATA
READ DATA FROM MESSAGE
IS PRESSURE ABOVE SHUTDOWN LIMIT
YES
PUBLISH DEVICE SHUTDOWN INITIATION EVENT TO THE TOPIC
PUBLISH
10-3
SUBSRIBE
NO
IS TEMPERATURE ABOVE SHUTDOWN LIMIT
YES
NO
10-1
IS PRESSURE ABOVE THRESHOLD LIMIT
YES
PUBLISH PRESSURE ALERT FOR THE DEVICE TO TOPIC
PUBLISH
10-3
NO
IS TEMPERATURE ABOVE THRESHOLD LIMIT
YES
NO
77
ADD DATA INTO HISTORICAL DATASET
UPDATE CURRENT DATASET WITH THE RECEIVED DATASET
END: READ DATA

FIG.10-2

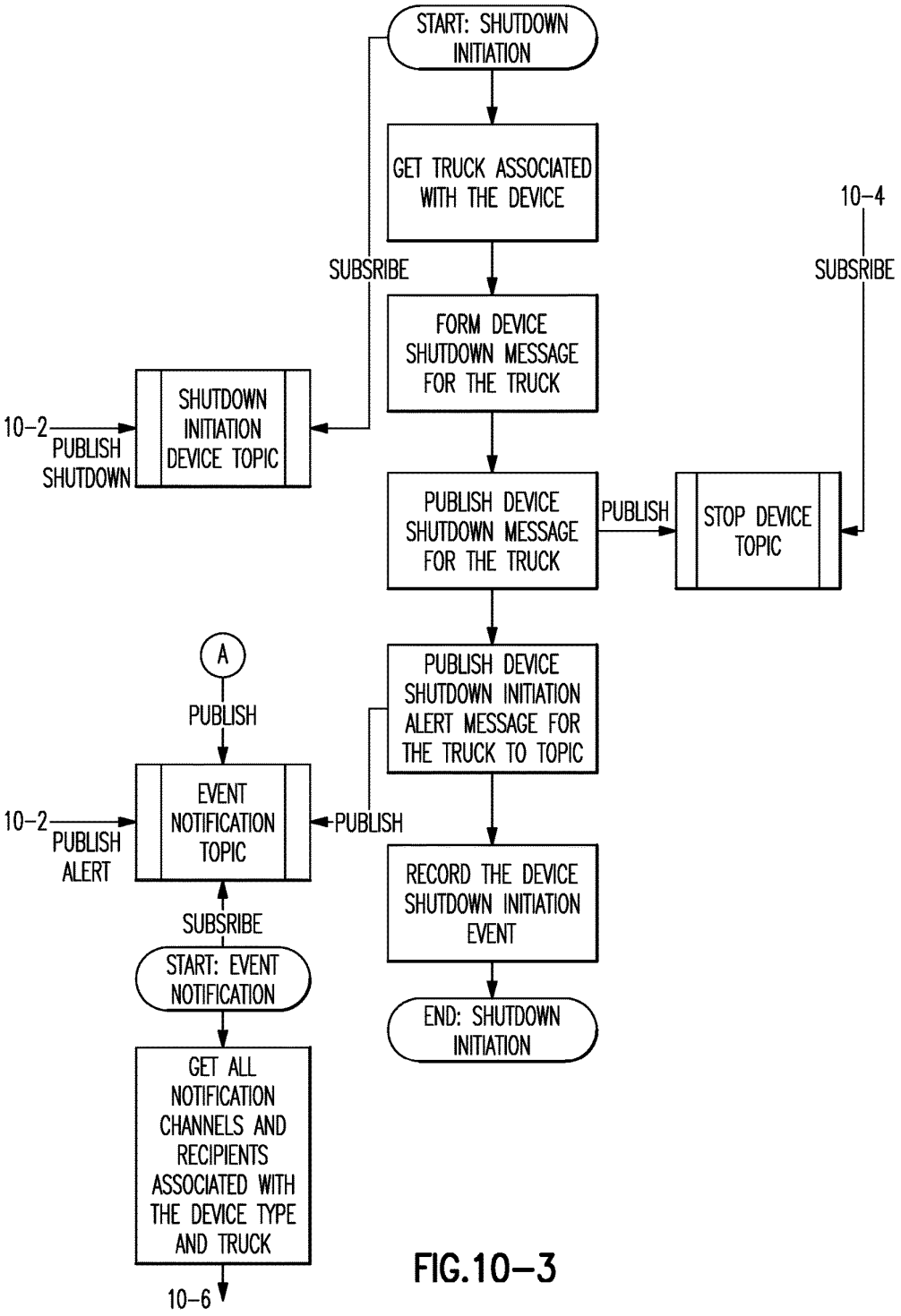
START: SHUTDOWN INITIATION
GET TRUCK ASSOCIATED WITH THE DEVICE
SUBSRIBE
FORM DEVICE SHUTDOWN MESSAGE FOR THE TRUCK
10-4
SUBSRIBE
10-2
PUBLISH SHUTDOWN
SHUTDOWN INITIATION DEVICE TOPIC
PUBLISH DEVICE SHUTDOWN MESSAGE FOR THE TRUCK
PUBLISH
STOP DEVICE TOPIC
A
PUBLISH
PUBLISH DEVICE SHUTDOWN INITIATION ALERT MESSAGE FOR THE TRUCK TO TOPIC
10-2
PUBLISH ALERT
EVENT NOTIFICATION TOPIC
PUBLISH
RECORD THE DEVICE SHUTDOWN INITIATION EVENT
SUBSRIBE
START: EVENT NOTIFICATION
END: SHUTDOWN INITIATION
GET ALL NOTIFICATION CHANNELS AND RECIPIENTS ASSOCIATED WITH THE DEVICE TYPE AND TRUCK
10-6

FIG.10-3

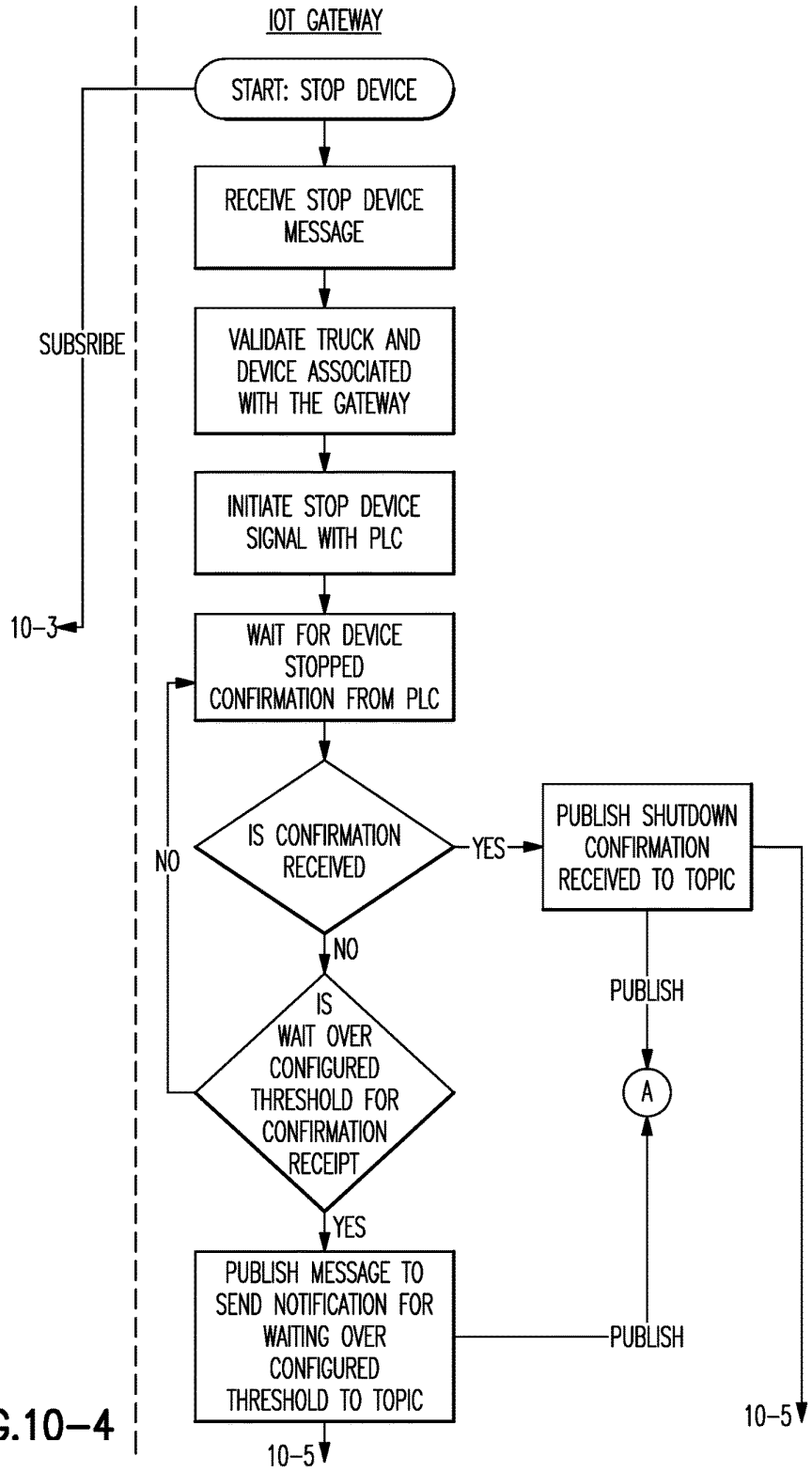
IOT GATEWAY
START: STOP DEVICE
RECEIVE STOP DEVICE MESSAGE
VALIDATE TRUCK AND DEVICE ASSOCIATED WITH THE GATEWAY
INITIATE STOP DEVICE SIGNAL WITH PLC
WAIT FOR DEVICE STOPPED CONFIRMATION FROM PLC
IS CONFIRMATION RECEIVED
YES
NO
PUBLISH SHUTDOWN CONFIRMATION RECEIVED TO TOPIC
PUBLISH
A
IS WAIT OVER CONFIGURED THRESHOLD FOR CONFIRMATION RECEIPT
NO
YES
PUBLISH MESSAGE TO SEND NOTIFICATION FOR WAITING OVER CONFIGURED THRESHOLD TO TOPIC
PUBLISH
SUBSRIBE
10-3
10-5
10-5

FIG.10-4

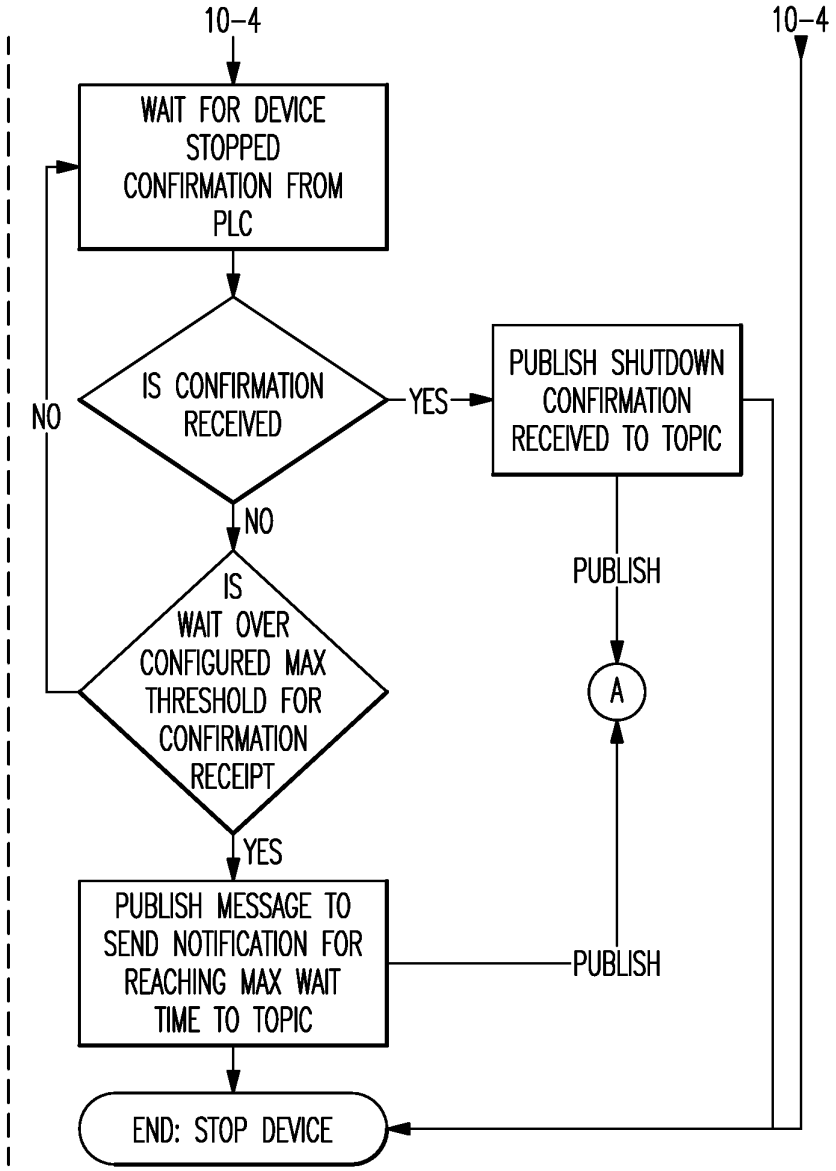
10–4
10–4
WAIT FOR DEVICE STOPPED CONFIRMATION FROM PLC
IS CONFIRMATION RECEIVED
YES
NO
PUBLISH SHUTDOWN CONFIRMATION RECEIVED TO TOPIC
NO
IS WAIT OVER CONFIGURED MAX THRESHOLD FOR CONFIRMATION RECEIPT
PUBLISH
A
YES
PUBLISH MESSAGE TO SEND NOTIFICATION FOR REACHING MAX WAIT TIME TO TOPIC
PUBLISH
END: STOP DEVICE

FIG.10–5

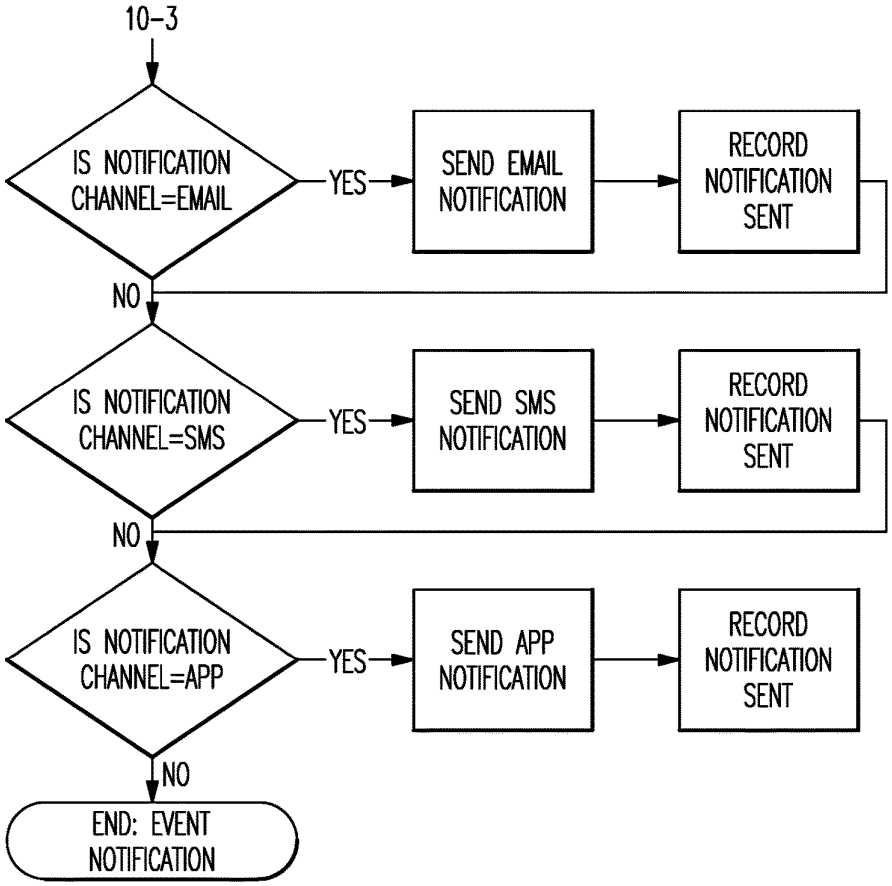
10-3
IS NOTIFICATION CHANNEL=EMAIL
YES
SEND EMAIL NOTIFICATION
RECORD NOTIFICATION SENT
NO
IS NOTIFICATION CHANNEL=SMS
YES
SEND SMS NOTIFICATION
RECORD NOTIFICATION SENT
NO
IS NOTIFICATION CHANNEL=APP
YES
SEND APP NOTIFICATION
RECORD NOTIFICATION SENT
NO
END: EVENT NOTIFICATION

FIG.10-6

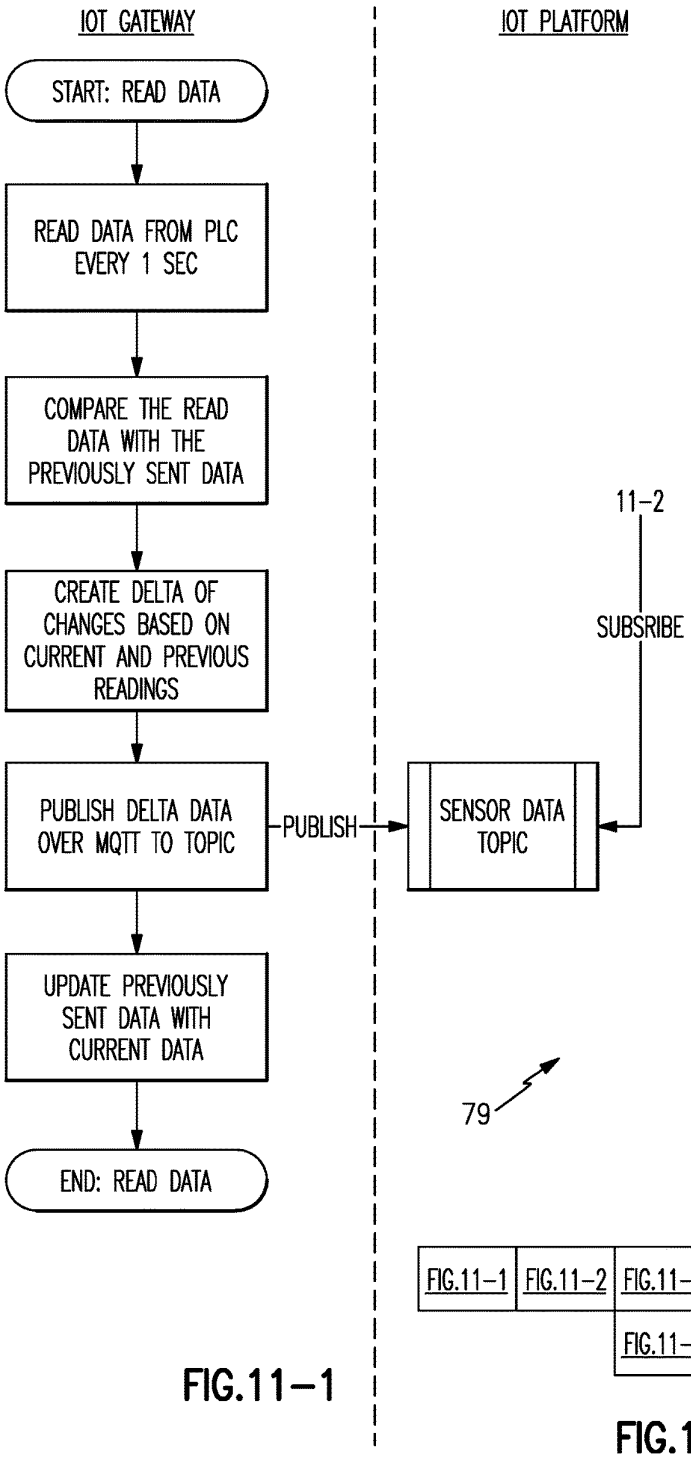

FIG.11-1

FIG.11-1	FIG.11-2	FIG.11-3	FIG.11-4	FIG.11-5
		FIG.11-6	FIG.11-7	FIG.11-8

FIG.11

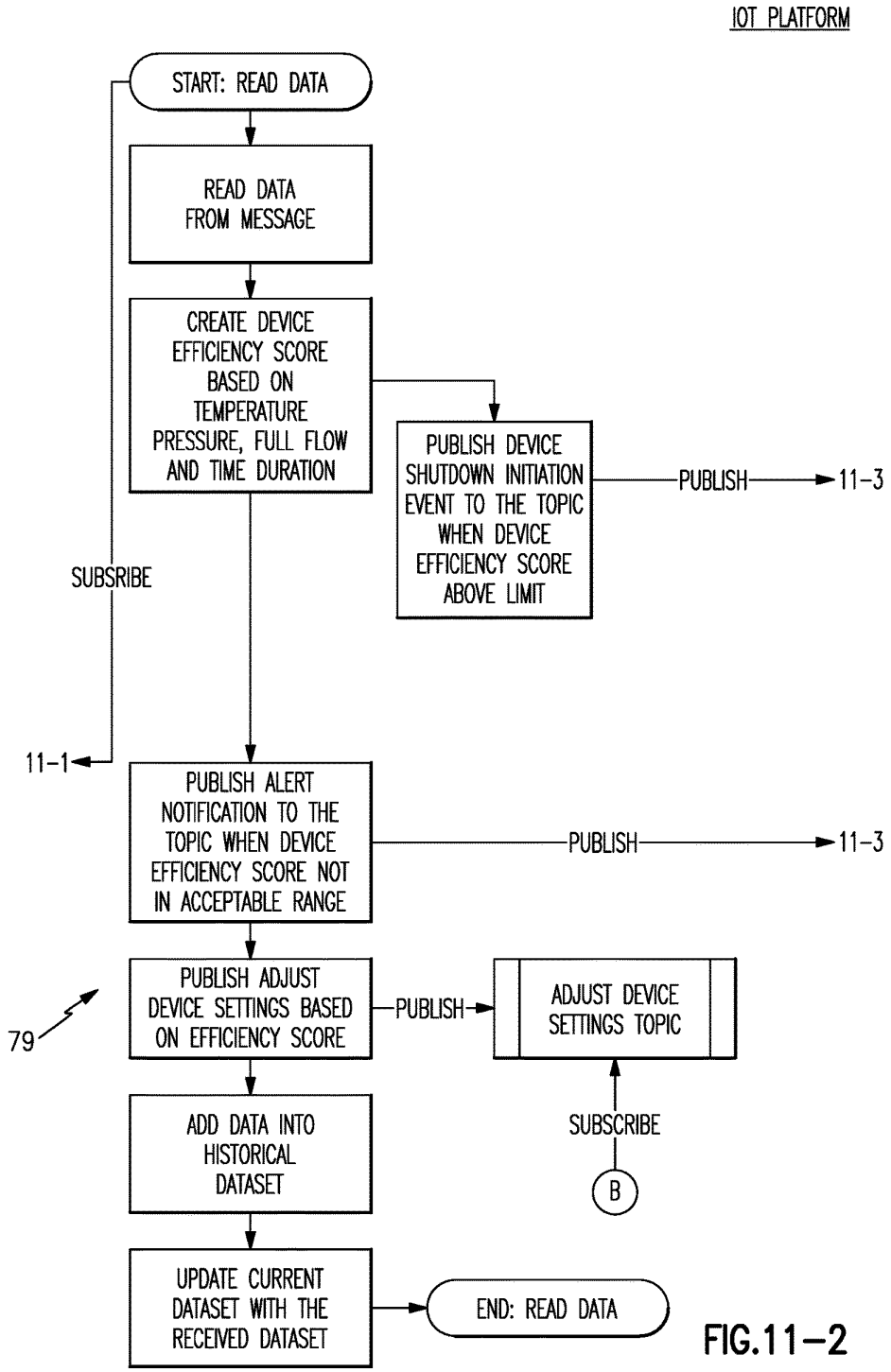
IOT PLATFORM
START: READ DATA
READ DATA FROM MESSAGE
CREATE DEVICE EFFICIENCY SCORE BASED ON TEMPERATURE PRESSURE, FULL FLOW AND TIME DURATION
PUBLISH DEVICE SHUTDOWN INITIATION EVENT TO THE TOPIC WHEN DEVICE EFFICIENCY SCORE ABOVE LIMIT
PUBLISH
11-3
SUBSRIBE
11-1
PUBLISH ALERT NOTIFICATION TO THE TOPIC WHEN DEVICE EFFICIENCY SCORE NOT IN ACCEPTABLE RANGE
PUBLISH
11-3
79
PUBLISH ADJUST DEVICE SETTINGS BASED ON EFFICIENCY SCORE
PUBLISH
ADJUST DEVICE SETTINGS TOPIC
SUBSCRIBE
B
ADD DATA INTO HISTORICAL DATASET
UPDATE CURRENT DATASET WITH THE RECEIVED DATASET
END: READ DATA

FIG.11-2

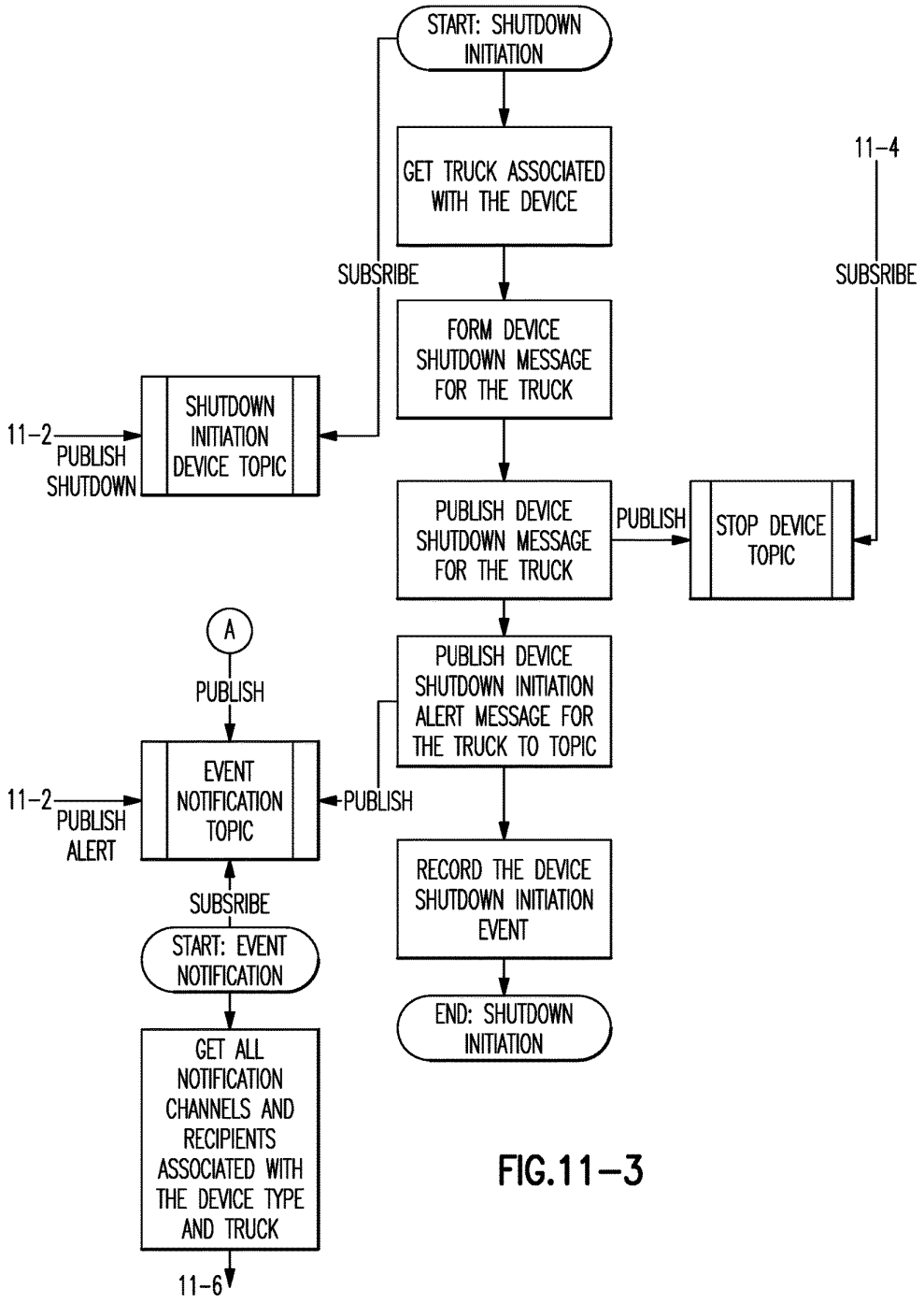
START: SHUTDOWN INITIATION
GET TRUCK ASSOCIATED WITH THE DEVICE
SUBSRIBE
FORM DEVICE SHUTDOWN MESSAGE FOR THE TRUCK
11-2
PUBLISH SHUTDOWN
SHUTDOWN INITIATION DEVICE TOPIC
PUBLISH DEVICE SHUTDOWN MESSAGE FOR THE TRUCK
PUBLISH
STOP DEVICE TOPIC
11-4
SUBSRIBE
A
PUBLISH
PUBLISH DEVICE SHUTDOWN INITIATION ALERT MESSAGE FOR THE TRUCK TO TOPIC
11-2
PUBLISH ALERT
EVENT NOTIFICATION TOPIC
PUBLISH
SUBSRIBE
START: EVENT NOTIFICATION
GET ALL NOTIFICATION CHANNELS AND RECIPIENTS ASSOCIATED WITH THE DEVICE TYPE AND TRUCK
11-6
RECORD THE DEVICE SHUTDOWN INITIATION EVENT
END: SHUTDOWN INITIATION

FIG.11-3

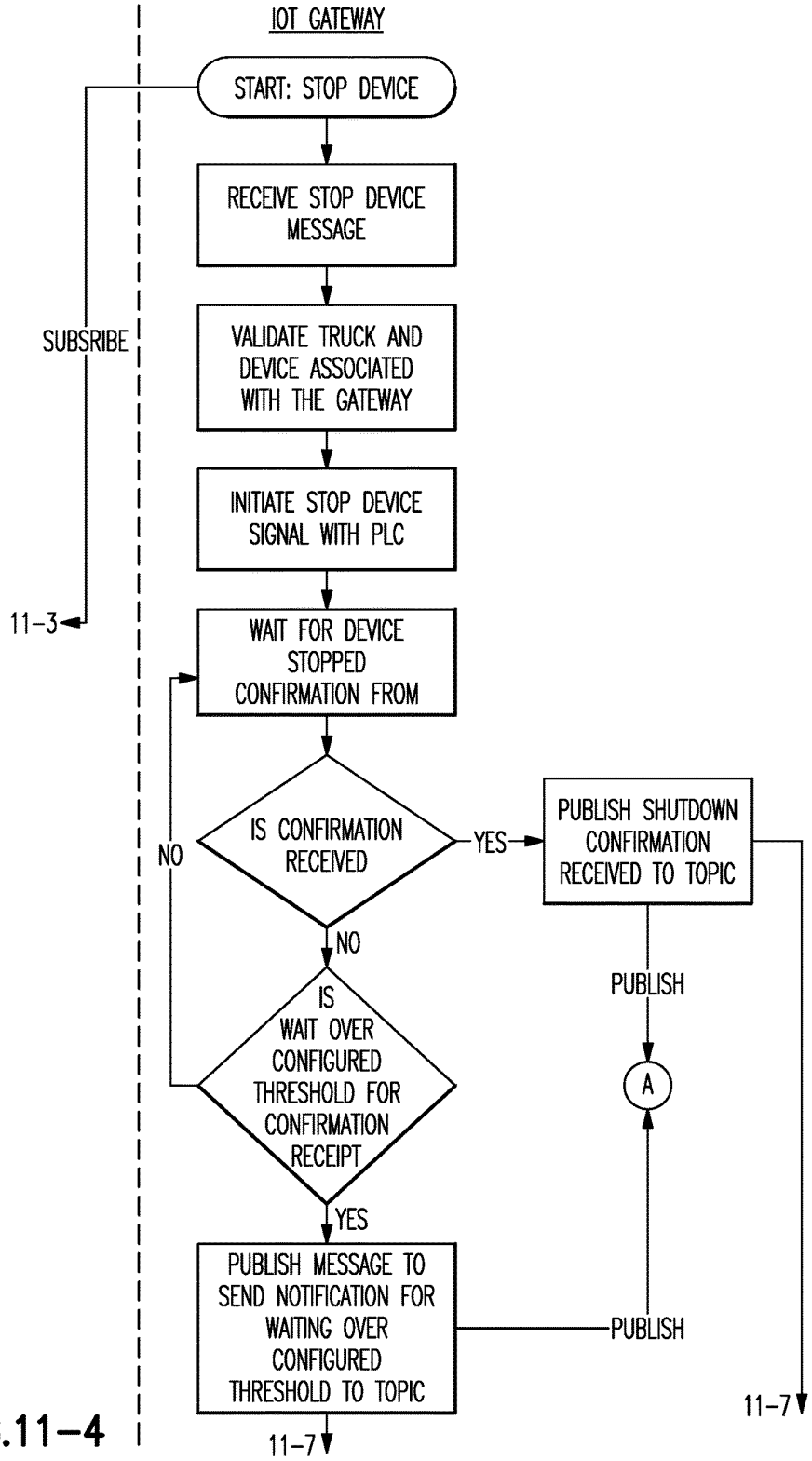
IOT GATEWAY
START: STOP DEVICE
RECEIVE STOP DEVICE MESSAGE
VALIDATE TRUCK AND DEVICE ASSOCIATED WITH THE GATEWAY
INITIATE STOP DEVICE SIGNAL WITH PLC
WAIT FOR DEVICE STOPPED CONFIRMATION FROM
IS CONFIRMATION RECEIVED
YES
NO
PUBLISH SHUTDOWN CONFIRMATION RECEIVED TO TOPIC
PUBLISH
A
IS WAIT OVER CONFIGURED THRESHOLD FOR CONFIRMATION RECEIPT
NO
YES
PUBLISH MESSAGE TO SEND NOTIFICATION FOR WAITING OVER CONFIGURED THRESHOLD TO TOPIC
PUBLISH
SUBSRIBE
11-3
11-7
11-7

FIG.11-4

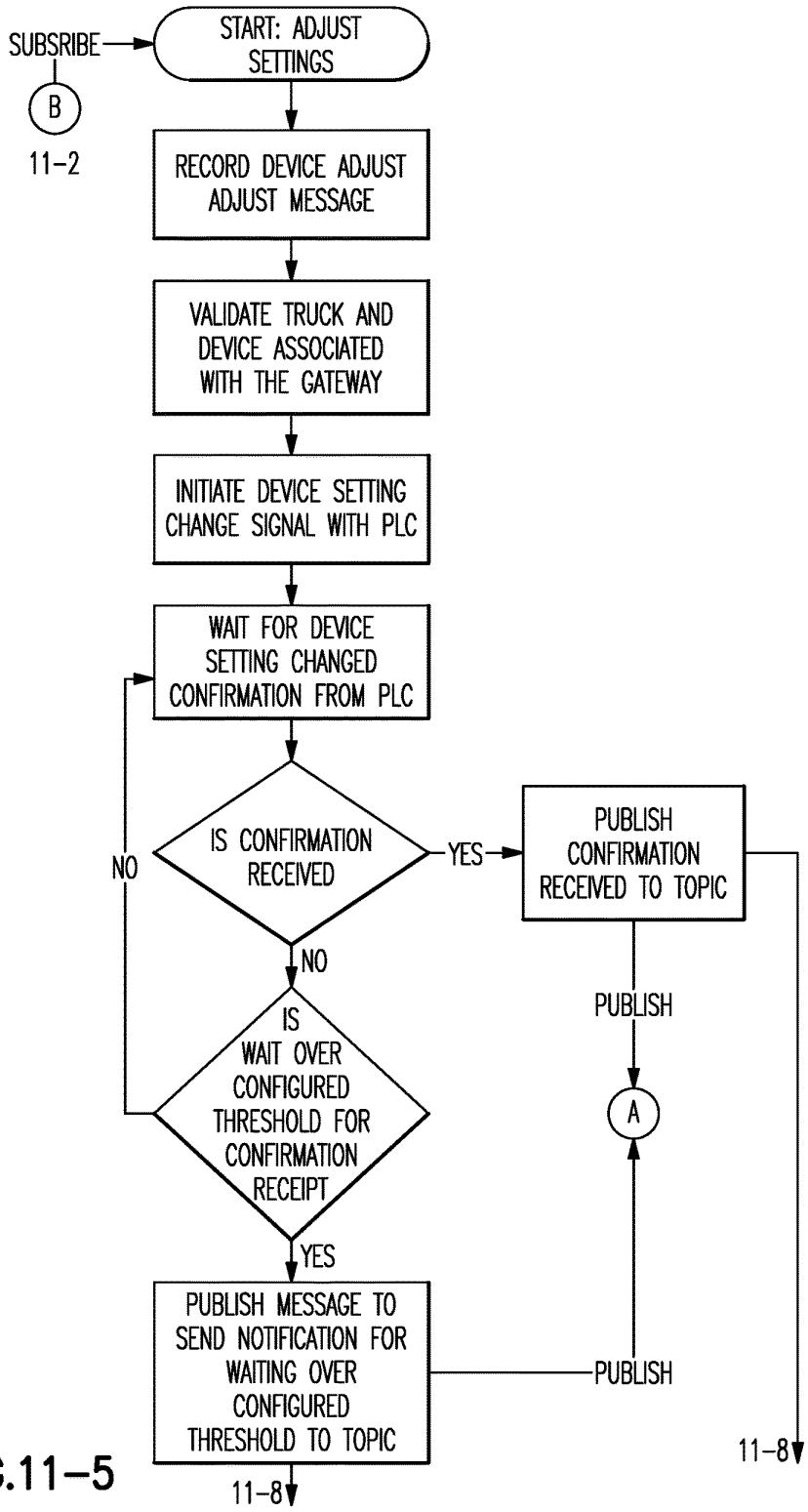
SUBSRIBE
B
11-2
START: ADJUST SETTINGS
RECORD DEVICE ADJUST ADJUST MESSAGE
VALIDATE TRUCK AND DEVICE ASSOCIATED WITH THE GATEWAY
INITIATE DEVICE SETTING CHANGE SIGNAL WITH PLC
WAIT FOR DEVICE SETTING CHANGED CONFIRMATION FROM PLC
IS CONFIRMATION RECEIVED
YES
NO
PUBLISH CONFIRMATION RECEIVED TO TOPIC
PUBLISH
A
IS WAIT OVER CONFIGURED THRESHOLD FOR CONFIRMATION RECEIPT
NO
YES
PUBLISH MESSAGE TO SEND NOTIFICATION FOR WAITING OVER CONFIGURED THRESHOLD TO TOPIC
PUBLISH
11-8
11-8

FIG.11-5

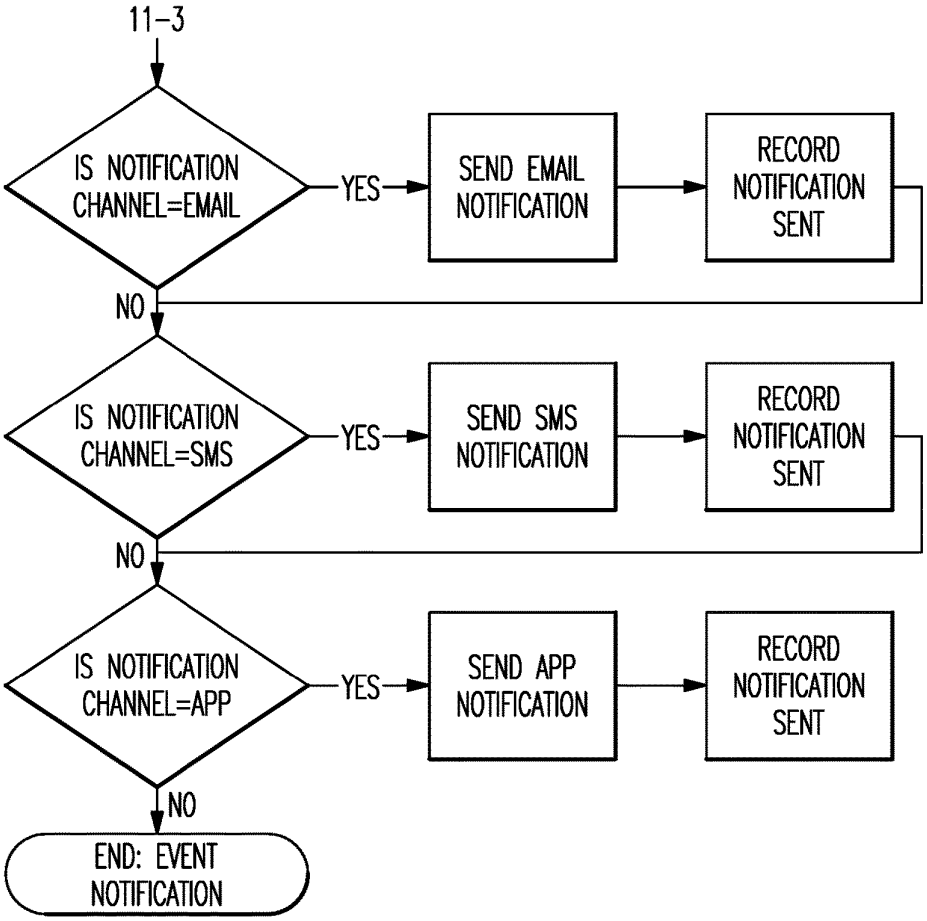
11-3
IS NOTIFICATION CHANNEL=EMAIL
YES
SEND EMAIL NOTIFICATION
RECORD NOTIFICATION SENT
NO
IS NOTIFICATION CHANNEL=SMS
YES
SEND SMS NOTIFICATION
RECORD NOTIFICATION SENT
NO
IS NOTIFICATION CHANNEL=APP
YES
SEND APP NOTIFICATION
RECORD NOTIFICATION SENT
NO
END: EVENT NOTIFICATION

FIG.11-6

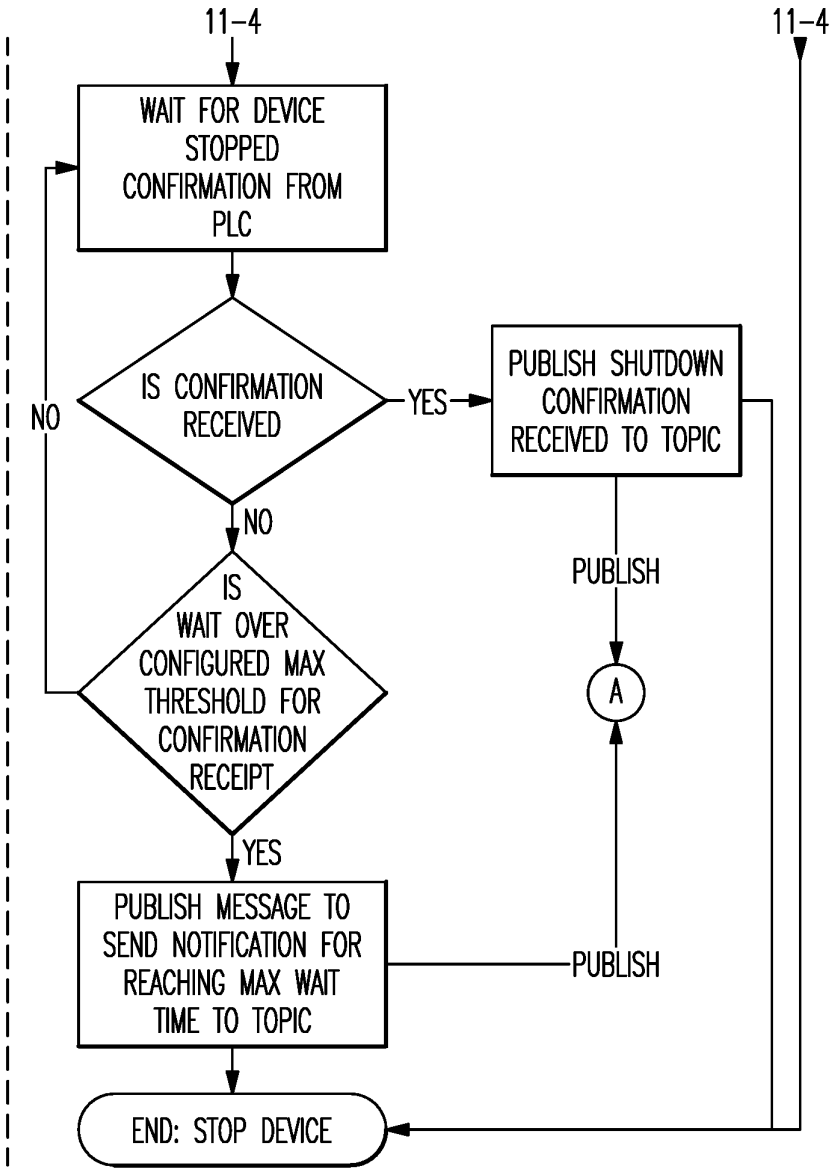
11-4
11-4
WAIT FOR DEVICE STOPPED CONFIRMATION FROM PLC
IS CONFIRMATION RECEIVED
YES
PUBLISH SHUTDOWN CONFIRMATION RECEIVED TO TOPIC
NO
NO
PUBLISH
IS WAIT OVER CONFIGURED MAX THRESHOLD FOR CONFIRMATION RECEIPT
A
YES
PUBLISH MESSAGE TO SEND NOTIFICATION FOR REACHING MAX WAIT TIME TO TOPIC
PUBLISH
END: STOP DEVICE

FIG.11-7

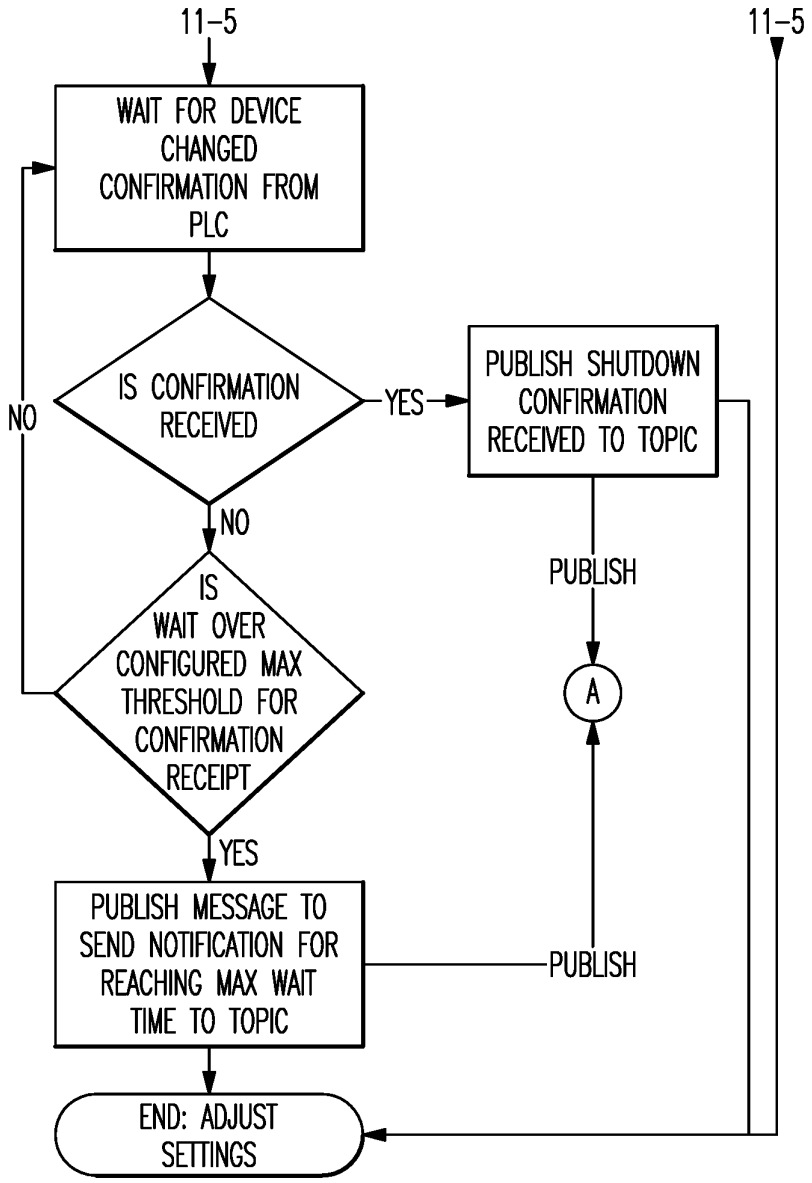
11-5
11-5
WAIT FOR DEVICE CHANGED CONFIRMATION FROM PLC
IS CONFIRMATION RECEIVED
YES
PUBLISH SHUTDOWN CONFIRMATION RECEIVED TO TOPIC
NO
NO
PUBLISH
IS WAIT OVER CONFIGURED MAX THRESHOLD FOR CONFIRMATION RECEIPT
A
YES
PUBLISH MESSAGE TO SEND NOTIFICATION FOR REACHING MAX WAIT TIME TO TOPIC
PUBLISH
END: ADJUST SETTINGS

FIG.11-8

MOBILE DISTRIBUTION STATION WITH AISLE WALKWAY

BACKGROUND

Hydraulic fracturing (also known as fracking) is a well-stimulation process that utilizes pressurized liquids to fracture rock formations. Pumps and other equipment used for hydraulic fracturing typically operate at the surface of the well site. The equipment may operate semi-continuously, until refueling is needed, at which time the equipment may be shut-down for refueling. Shut-downs are costly and reduce efficiency. More preferably, to avoid shut-downs fuel is replenished in a hot-refueling operation while the equipment continues to run. This permits fracking operations to proceed fully continuously; however, hot-refueling can be difficult to reliably sustain for the duration of the fracking operation.

SUMMARY

A distribution station according to an example of the present disclosure includes a mobile trailer, a pump on the mobile trailer, first and second manifolds on the mobile trailer and fluidly connected with the pump, a plurality of reels on the mobile trailer, a plurality of hoses connected, respectively, with the reels. A portion of the reels are connected with the first manifold and another portion of the reels are connected with the second manifold. Valves on the mobile trailer are each situated between one of the first or second manifolds and a respective different one of the hoses. Fluid level sensors are associated with respective different ones of the hoses. The reels are arranged on first and second opposed sides in the mobile trailer, with an aisle walkway down the middle of the mobile trailer.

In a further embodiment of any of the foregoing embodiments, the reels on each of the first and second opposed sides are arranged in upper and lower rows of reels.

A further embodiment of any of the foregoing embodiments includes first and second support racks on which the reels are supported. The first support rack is arranged on the first side and the second support rack arranged on the second side.

In a further embodiment of any of the foregoing embodiments, the aisle walkway has an aisle width and the reels have a reel diameter, and the aisle width is greater than the reel diameter by a factor of at least 1.3.

In a further embodiment of any of the foregoing embodiments, the trailer has a trailer width of no greater than about 96 inches.

In a further embodiment of any of the foregoing embodiments, a ratio of a number of reels in the upper row to a number of reels in the lower row is 1:1.

In a further embodiment of any of the foregoing embodiments, the mobile trailer includes a trailer end wall that has an outside door, and an inside wall that defines first and second compartments in the mobile trailer. The outside door opens into the first compartment, and at least the manifolds and the reels are in the first compartment.

In a further embodiment of any of the foregoing embodiments, the inside wall includes an inside door providing access between the first compartment and the second compartment. The aisle walkway extends from the outside door to the inside door.

A further embodiment of any of the foregoing embodiments includes a controller in the second compartment. The controller is configured to operate the valves.

In a further embodiment of any of the foregoing embodiments, the second compartment is insulated with a fire resistant or retardant material.

In a further embodiment of any of the foregoing embodiments, the aisle walkway has an aisle width and the reels have a reel diameter, and the aisle width is greater than the reel diameter by a factor of at least 1.3.

In a further embodiment of any of the foregoing embodiments, the aisle width is greater than the reel diameter by a factor of at least 1.5.

In a further embodiment of any of the foregoing embodiments, the aisle walkway has an aisle width and the mobile trailer has a trailer width, and a ratio of the trailer width to the aisle width is no greater than 5.

In a further embodiment of any of the foregoing embodiments, the ratio of the trailer width to the aisle width is greater than 2.

In a further embodiment of any of the foregoing embodiments, the ratio of the trailer width to the aisle width is equal to or less than 4.

A further embodiment of any of the foregoing embodiments includes a floor pan in the mobile trailer.

A distribution station according to an example of the present disclosure includes a mobile trailer, a pump on the mobile trailer, first and second manifolds on the mobile trailer and fluidly connected with the pump, and a plurality of reels on the mobile trailer. A plurality of hoses are connected, respectively, with the reels. A portion of the reels are connected with the first manifold and another portion of the reels are connected with the second manifold. Valves on the mobile trailer are situated between one of the first or second manifolds and respective different ones of the hoses. A plurality of fluid level sensors are associated with respective different ones of the hoses. The mobile trailer includes first and second opposed trailer side walls. A first group of the hoses are deployable from the first trailer side wall and a second group of the hoses are deployable from the second trailer side wall.

In a further embodiment of any of the foregoing embodiments, the reels are arranged on first and second opposed sides in the mobile trailer such that there is an aisle walkway down the middle of the mobile trailer.

In a further embodiment of any of the foregoing embodiments, the reels on each of the first and second opposed sides are arranged in upper and lower rows of reels.

In a further embodiment of any of the foregoing embodiments, the aisle walkway has an aisle width and the reels have a reel diameter, and the aisle width is greater than the reel diameter by a factor of at least 1.3.

In a further embodiment of any of the foregoing embodiments, the mobile trailer has a trailer width of no greater than about 96 inches.

A further embodiment of any of the foregoing embodiments includes a floor pan in the mobile trailer.

BRIEF DESCRIPTION OF THE DRAWINGS

The various features and advantages of the present disclosure will become apparent to those skilled in the art from the following detailed description. The drawings that accompany the detailed description can be briefly described as follows.

FIG. **1** illustrates an example mobile distribution station.

FIG. **2** illustrates an internal layout of a mobile distribution station.

FIG. **3** illustrates an isolated view of hose reels on a support rack used in a mobile distribution station.

FIG. **4** illustrates an example of a connection between a manifold, a control valve, and a reel.

FIG. **5** illustrates a sectioned view of an example hose for a mobile distribution station.

FIG. **6** illustrates an example of an integrated fuel cap sensor for a mobile distribution station.

FIG. **7** illustrates an example of the routing of a sensor communication line through a reel in a mobile distribution station.

FIG. **8** illustrates an example of a mobile distribution station with an integrated floor pan.

FIG. **9** illustrates a system that can be used to remotely monitor and manage one or more mobile distribution stations.

FIG. **10** illustrates a workflow logic diagram that represents an example of a method for managing one or more mobile distribution stations.

FIG. **11** illustrates another workflow logic diagram that represents an example of a method for managing one or more mobile distribution stations.

DETAILED DESCRIPTION

FIG. **1** illustrates a mobile distribution station **20** and FIG. **2** illustrates an internal layout of the station **20**. As will be described, the station **20** may serve in a "hot-refueling" capacity to distribute fuel to multiple pieces of equipment while the equipment is running, such as fracking equipment at a well site. As will be appreciated, the station **20** is not limited to applications for fracking or for delivering fuel. The examples herein may be presented with respect to fuel delivery, but the station **20** may be used in mobile delivery of other fluids, in other gas/petroleum recovery operations, or in other operations where mobile refueling or fluid delivery will be of benefit.

In this example, the station **20** includes a mobile trailer **22**. Generally, the mobile trailer **22** is elongated and has first and second opposed trailer side walls W**1** and W**2** that join first and second opposed trailer end walls E**1** and E**2**. Most typically, the trailer **22** will also have a closed top (not shown). The trailer side walls W**1**/W**2** define a trailer width, TW. The mobile trailer **22** may have wheels that permit the mobile trailer **22** to be moved by a vehicle from site to site to service different hot-refueling operations.

In this example, the mobile trailer **22** has two compartments. A first compartment **24** includes the physical components for distributing fuel, such as diesel fuel, and a second compartment **26** serves as an isolated control room for managing and monitoring fuel distribution. The compartments **24**/**26** are separated by an inside wall **28***a* that has an inside door **28***b*. The second compartment **26** may be insulated with a fire resistant or retardant material **26***a*. In the event of a fire threat, a worker may take cover in the second compartment **26**. The fire resistant or retardant material **26***a* may shield the second compartment and thus temporarily protect the worker under such circumstances. The second compartment **26** may include an auxiliary escape door to provide external egress from the trailer **22**. Thus, if needed, a worker may exit the trailer **22** other than by the first compartment **24**.

The first compartment **24** includes one or more pumps **30**. Fuel may be provided to the one or more pumps **30** from an external fuel source, such as a tanker truck on the site. On the trailer **22**, the one or more pumps **30** are fluidly connected via a fuel line **32** with a high precision register **34** for metering fuel. The fuel line **32** may include, but is not limited to, hard piping. In this example, the fuel line **32** includes a filtration and air eliminator system **36***a* and one or more sensors **36***b*. Although optional, the system **36***a* is beneficial in many implementations, to remove foreign particles and air from the fuel prior to delivery to the equipment. The one or more sensors **36***b* may include a temperature sensor, a pressure sensor, or a combination thereof, which assist in fuel distribution management.

The fuel line **32** is connected with one or more manifolds **38**. In the illustrated example, the station **20** includes two manifolds **38** that arranged on opposed sides of the compartment **24**. As an example, the manifolds **38** are elongated tubes that are generally larger in diameter than the fuel line **32** and that have at least one inlet and multiple outlets. Each hose **40** is wound, at least initially, on a reel **42** that is rotatable to extend or retract the hose **40** externally through one or more windows of the trailer **22**. Each reel **42** has a reel diameter RD, which is the outside diameter or dimension of the reel **42**. Most typically, all or substantially all of the reels **42** will be the same size and thus have a common reel diameter RD. Each reel **42** may have an associated motor to mechanically extend and retract the hose **40**.

As shown in an isolated view in FIG. **3**, the reels **42** are mounted on a support rack **42***a*. In this example, the support rack **42***a* is configured with upper and lower rows of reels **42**. For instance, a ratio of the number of reels **42** in the upper row to a number of reels in the lower row on the support rack **42***a* is 1:1. As an example, each row has five reels **42** such that each support rack **42***a* provides ten reels **42** and thus ten hoses **40**. There are two support racks **42***a* (FIG. **2**) arranged on opposed sides of the first compartment **24**. The reels **42** are thus likewise arranged on opposed sides of the first compartment **24** in the trailer **22**. The station **20** therefore can provide twenty hoses **40** in the illustrated arrangement, with ten hoses **40** deployable on each side of the station **20**. For instance, the first group of ten hoses **40** on one side of the compartment **24** are deployable from the first trailer side wall W**1** and the second group of ten hoses **40** are deployable from the second trailer side wall W**2**. As will be appreciated, fewer or additional reels and hoses may be used in alternative examples.

An aisle walkway (A) runs down the middle of the trailer **22**. In this example, the aisle walkway A runs between the support racks **42***a* from an outside door E to the inside door **28***b*. Most typically, the aisle walkway A will include the space or volume through which workers walk to operate the station **20**. The aisle walkway A has an aisle width A**1**. As an example, the aisle width A**1** is the largest constant width walkway down the trailer **22** adjacent at least the reels **42** that is not intruded upon by affixed equipment in the trailer **22**, such as the reels **42**, support racks **42***a*, other support structures, etc.

The size of the aisle width A can contribute to reducing the potential for undesired incidents. For instance, there may be two or three or more workers that walk up and down the aisle walkway A in connection with their job duties. The workers need space to potentially pass by each other in the aisle walkway A and carry equipment through the aisle walkway A without bumping into each other or into equipment affixed in the trailer **22**.

The aisle width A**1**, however, is not unlimited and is subject to space availability and other factors relating to the performance of the station **20**. For instance, the reel diameter RD relates to the lengths of hoses that can be stored on the reels **42**. A relatively large reel diameter RD can accommodate a long hose winding, while a relatively smaller reel diameter RD would only accommodate a shorter hose winding. Longer hoses potentially provide greater access to

equipment on a site that is located farther from the station, but longer hoses require more space in a station than shorter hoses due to the size of the reel needed to wind the longer hose. There is thus a multi-faceted interplay between the size and number of reels, arrangement of reels, and size/location of an aisle.

In a middle aisle arrangement as with the aisle walkway A, the aisle width A**1** is greater than the reel diameter RD by a factor of at least 1.3. In a further example, the aisle width A**1** is greater than the reel diameter RD by a factor of at least 1.5, and the trailer width TW is no greater than about 96 inches.

Additionally or alternatively, in a further example, a ratio of the trailer width TW to the aisle width A**1** is no greater than 5. In a further example, the ratio of the trailer width TW to the aisle width A**1** is also greater than 2. In a further example, the ratio of the trailer width TW to the aisle width A**1** is also equal to or less than 4. In a further example, the trailer width TW is no greater than about 96 inches and the ratio of the trailer width TW to the aisle width A**1** is greater than 2 and no greater than 5. In a further example of any of the examples herein, the aisle width A**1** is between about 30 inches and about 38 inches. The parameters above provide good station performance in combination with good packaging in the trailer **22** and good aisle size for worker movement.

As shown in a representative example in FIG. **4**, each hose **40** is connected to a respective one of the reels **42** and a respective one of a plurality of control valves **44**. For example, a secondary fuel line **46** leads from the manifold **38** to the reel **42**. The control valve **44** is in the secondary fuel line **46**. The control valve **44** is moveable between open and closed positions to selectively permit fuel flow from the manifold **38** to the reel **42** and the hose **40**. For example, the control valve **44** is a powered valve, such as a solenoid valve.

In the illustrated example, the first compartment **24** also includes a sensor support rack **48**. The sensor support rack **48** holds integrated fuel cap sensors **50** (when not in use), or at least portions thereof. When in use, each integrated fuel cap sensor **50** is temporarily affixed to a piece of equipment (i.e., the fuel tank of the equipment) that is subject to the hot-refueling operation. Each hose **40** may include a connector end **40***a* and each integrated fuel cap sensor **50** may have a corresponding mating connector to facilitate rapid connection and disconnection of the hose **40** with the integrated fuel cap sensor **50**. For example, the connector end **40***a* and mating connector on the integrated fuel cap sensor **50** form a hydraulic quick-connect.

At least the control valves **44**, pump or pumps **30**, sensor or sensors **36***b*, and register **34** are in communication with a controller **52** located in the second compartment **26**. As an example, the controller **52** includes software, hardware, or both that is configured to carry out any of the functions described herein. In one further example, the controller **52** includes a programmable logic controller with a touch-screen for user input and display of status data. For example, the screen may simultaneously show multiple fluid levels of the equipment that is being serviced.

When in operation, the integrated fuel cap sensors **50** are mounted on respective fuel tanks of the pieces of equipment that are subject to the hot-refueling operation. The hoses **40** are connected to the respective integrated fuel cap sensors **50**. Each integrated fuel cap sensor **50** generates signals that are indicative of the fuel level in the fuel tank of the piece of equipment on which the integrated fuel cap sensor **50** is mounted. The signals are communicated to the controller **52**.

The controller **52** interprets the signals and determines the fuel level for each fuel tank of each piece of equipment. In response to a fuel level that falls below a lower threshold, the controller **52** opens the control valve **44** associated with the hose **40** to that fuel tank and activates the pump or pumps **30**. The pump or pumps **30** provide fuel flow into the manifolds **38** and through the open control valve **44** and reel **42** such that fuel is provided through the respective hose **40** and integrated fuel cap sensor **50** into the fuel tank. The lower threshold may correspond to an empty fuel level of the fuel tank, but more typically the lower threshold will be a level above the empty level to reduce the potential that the equipment completely runs out of fuel and shuts down. The controller **52** can also be programmed with a failsafe measure related to the operation of the fuel cap sensors **50**. As an example, once a control valve **44** is open, if the controller **52** does not detect a change in fuel level from the fuel cap sensor **50** associated with the control valve **44** within a preset time period, the controller **52** shuts the pump **30** off and closes the control valve **44**. Thus, if a hose **40** were to rupture, spillage of fuel is limited to the volume of fuel in the hose **40**. For instance, the preset time period may be three seconds, six seconds, ten seconds, or fifteen seconds, which may limit spillage to approximately fifteen gallons for a given size of hose.

The controller **52** also determines when the fuel level in the fuel tank reaches an upper threshold. The upper threshold may correspond to a full fuel level of the fuel tank, but more typically the upper threshold will be a level below the full level to reduce the potential for overflow. In response to reaching the upper threshold, the controller **52** closes the respective control valve **44** and ceases the pump or pumps **30**. If other control valves **44** are open or are to be opened, the pump or pumps **30** may remain on. The controller **52** can also be programmed with an electronic stop failsafe measure to prevent over-filling. As an example, once an upper threshold is reached on a first tank and the control valve **44** is closed, but the pump **30** is otherwise to remain on to fill other tanks, if the fuel level continues to rise in the first tank, the controller **52** shuts the pump **30** off.

Multiple control valves **44** may be open at one time, to provide fuel to multiple fuel tanks at one time. Alternatively, if there is demand for fuel from two or more fuel tanks, the controller **52** may sequentially open the control valves **44** such that the tanks are refueled sequentially. For instance, upon completion of refueling of one fuel tank, the controller **52** closes the control valve **44** of the hose **40** associated with that tank and then opens the next control valve **44** to begin refueling the next fuel tank. Sequential refueling may facilitate maintaining internal pressure in the manifold and fuel line **32** above a desired or preset pressure threshold to more rapidly deliver fuel. Similarly, the controller **52** may limit the number of control valves **44** that are open at any one instance in order to maintain the internal pressure in the manifold and fuel line **32** above a desired or preset threshold. The controller **52** may perform the functions above while in an automated operating mode. Additionally, the controller **52** may have a manual mode in which a user can control at least some functions through the PLC, such as starting and stopped the pump **30** and opening and closing control valves **44**. For example, manual mode may be used at the beginning of a job when initially filling tanks to levels at which the fuel cap sensors **50** can detect fuel and/or during a job if a fuel cap sensor **50** becomes inoperable. Of course, operating in manual mode may deactivate some automated functions, such as filling at the low threshold or stopping at the high threshold.

In addition to the use of the sensor signals to determine fuel level, or even as an alternative to use of the sensor signals, the refueling may be time-based. For instance, the fuel consumption of a given piece of equipment may be known such that the fuel tank reaches the lower threshold at known time intervals. The controller **52** is operable to refuel the fuel tank at the time intervals rather than on the basis of the sensor signals, although sensor signals may also be used to verify fuel level.

The controller **52** also tracks the amount of fuel provided to the fuel tanks. For instance, the register **34** precisely measures the amount of fuel provided from the pump or pumps **30**. As an example, the register **34** is an electronic register and has a resolution of about 0.1 gallons. The register **34** communicates measurement data to the controller **52**. The controller **52** can thus determine the total amount of fuel used to very precise levels. The controller **52** may also be configured to provide outputs of the total amount of fuel consumed. For instance, a user may program the controller **52** to provide outputs at desired intervals, such as by worker shifts or daily, weekly, or monthly periods. The outputs may also be used to generate invoices for the amount of fuel used. As an example, the controller **52** may provide a daily output of fuel use and trigger the generation of an invoice that corresponds to the daily fuel use, thereby enabling almost instantaneous invoicing.

In a further example, the integrated fuel cap sensors **50** are each hard-wired to the controller **52**. The term "hard-wired" or variations thereof refers to a wired connection between two components that serves for electronic communication there between, which here a sensor and a controller. The hard-wiring may facilitate providing more reliable signals from the integrated fuel cap sensors **50**. For instance, the many pieces of equipment, vehicles, workers, etc. at a site may communicate using wireless devices. The wireless signals may interfere with each other and, therefore, degrade communication reliability. Hard-wiring the integrated fuel cap sensors **50** to the controller **52** facilitates reduction in interference and thus enhances reliability.

In general, hard-wiring in a hot-refueling environment presents several challenges. For example, a site has many workers walking about and typically is located on rough terrain. Thus, as will be described below, each integrated fuel cap sensor **50** is hard-wired through the associated hose **40** to the controller **52**.

FIG. **5** illustrates a representative portion of one of the hoses **40** and, specifically, the end of the hose **40** that will be located at the fuel tank of the equipment being refueled. In this example, the hose **40** includes a connector **60** at the end for detachably connecting the hose **40** to the integrated fuel cap sensors **50**. The hose **40** is formed of a tube **62** and a sleeve **64** that circumscribes the tube **62**. As an example, the tube **62** may be a flexible elastomeric tube and the sleeve **64** may be a flexible fabric sleeve. The sleeve **64** is generally loosely arranged around the tube **62**, although the sleeve **64** may closely fit on the tube **62** to prevent substantial slipping of the sleeve **64** relative to the tube **62** during use and handling. Optionally, to further prevent slipping and/or to secure the sleeve **64**, bands may be tightened around the hose **40**. As an example, one or more steel or stainless steel bands can be provided at least near the ends of the hose **40**.

A plurality of sensor communication lines **66** (one shown) are routed with or in the respective hoses **40**. For instance, each line **66** may include a wire, a wire bundle, and/or multiple wires or wire bundles. In one further example, the line **66** is a low milli-amp intrinsic safety wiring, which serves as a protection feature for reducing the concern for operating electrical equipment in the presence of fuel by limiting the amount of thermal and electrical energy available for ignition. In this example, the line **66** is routed through the hose **40** between (radially) the tube **62** and the sleeve **64**. The sleeve **64** thus serves to secure and protect the line **66**, and the sleeve **64** may limit spill and spewing if there is a hose **40** rupture. In particular, since the line **66** is secured in the hose **40**, the line **66** does not present a tripping concern for workers. Moreover, in rough terrain environments where there are stones, sand, and other objects that could damage the line **66** if it were free, the sleeve **64** shields the line **66** from direct contact with such objects. In further examples, the line **66** may be embedded or partially embedded in the tube **62** or the sleeve **64**.

In this example, the line **66** extends out from the end of the hose **40** and includes a connector **68** that is detachably connectable with a respective one of the integrated fuel cap sensors **50**. For example, FIG. **6** illustrates a representative example of one of the integrated fuel cap sensors **50**. The integrated fuel cap sensor **50** includes a cap portion **50***a* and a fluid level sensor portion **50***b*. The cap portion **50***a* is detachably connectable with a port of a fuel tank. The cap portion **50***a* includes a connector port **50***c*, which is detachably connectable with the connector **60** of the hose **40**. The sensor portion **50***b* includes a sensor **50***d* and a sensor port **50***e* that is detachably connectable with the connector **68** of the line **66**. The fuel cap sensor **50** may also include a vent port that attaches to a drain hose, to drain any overflow into a containment bucket and/or reduce air pressure build-up in a fuel tank. Thus, a user may first mount the cap portion **50***a* on the fuel tank of the equipment, followed by connecting the hose **40** to the port **50***c* and connecting the line **66** to the port **50***e*.

The sensor **50***d* may be any type of sensor that is capable of detecting fluid or fuel level in a tank. In one example, the sensor **50***d* is a guided wave radar sensor. A guided wave radar sensor may include a transmitter/sensor that emits radar waves, most typically radio frequency waves, down a probe. A sheath may be provided around the probe. For example, the sheath may be a metal alloy (e.g., stainless steel or aluminum) or polymer tube that surrounds the probe. One or more bushings may be provided between the probe and the sheath, to separate the probe from the sheath. The sheath shields the probe from contact by external objects, the walls of a fuel tank, or other components in a fuel tank, which might otherwise increase the potential for faulty sensor readings. The probe serves as a guide for the radar waves. The radar waves reflect off of the surface of the fuel and the reflected radar waves are received into the transmitter/sensor. A sensor controller determines the "time of flight" of the radar waves, i.e., how long it takes from emission of the radar waves for the radar waves to reflect back to the transmitter/sensor. Based on the time, the sensor controller, or the controller **52** if the sensor controller does not have the capability, determines the distance that the radar waves travel. A longer distance thus indicates a lower fuel level (farther away) and a shorter distance indicates a higher fuel level (closer).

The line **66** routes through the hose **40** and back to the reel **42** in the trailer **22**. For example, the line **66** is also routed or hard-wired through the reel **42** to the controller **52**. FIG. **7** illustrates a representative example of the routing in the reel **42**. In this example, the reel **42** includes a spindle **42***b* about which the reel is rotatable. The spindle **42***b* may be hollow, and the line **66** may be routed through the spindle **42***b*. The reel **42** may also include a connector **42***c* mounted

thereon. The connector **42***c* receives the line **66** and serves as a port for connection with another line **66***a* to the controller **52**.

The lines **66***a* may converge to one or more communication junction blocks or "bricks" prior to the controller **52**. The communication junction blocks may serve to facilitate the relay of the signals back to the controller **52**. The communication junction blocks may alternatively or additionally serve to facilitate identification of the lines **66**, and thus the signals, with respect to which of the hoses a particular line **66** is associated with. For instance, a group of communication junction blocks may have unique identifiers and the lines **66** into a particular communication junction block may be associated with identifiers. A signal relayed into the controller **52** may thus be associated with the identifier of the communication junction blocks and a particular line **66** of that communication junction block in order to identify which hose the signal is to be associated with. The valves **44** may also communicate with the controller **52** in a similar manner through the communication junction blocks.

As illustrated in a further example in FIG. **8**, the station **20** may be further enhanced to reduce the potential for fluid or fuel escape. The trailer **22**, depicted here in phantom, includes a floor pan **80**. The floor pan **80** may be formed of metal, polymer, or combinations thereof and serves to reduce or prevent the escape of fluid or fuel from inside the trailer **22**. In comparison to a temporary, moveable catch basin, the floor pan **80** is a permanent fixture in the trailer **22**, and may be structurally affixed in the trailer **22** by fasteners, adhesive, or the like.

As an example, the floor pan **80** includes a bottom **80***a* that joins sides **80***b* to define a container cavity **80***c*. For instance, the floor pan **80** lines the bottom portion of the trailer **22**. The bottom **80***a* and sides **80***b* seal the container cavity **80***c* such that any fluid or fuel that leaks in the trailer **22** is caught and contained in the floor pan **80**, to reduce the potential of spilling or leaking out from the trailer **22**. The floor pan **80** may line only the first compartment **24** or may line both the first and second compartments **24**/**26**. In alternative examples, the floor pan **80** may line only a portion of the trailer **22** where there is potential for leak or spill. Most typically, the floor pan **80** will cover a majority of the floor area of the trailer **22** or at least a majority of the first compartment **24**. In further examples, a ratio of the width of the floor pan **80** to the minimum height of the sides **80***b* is no less than 16 and may be up to about 50. In yet a further example, the cavity **80***c* of the floor pan **80** has a volume of approximately two-hundred gallons and the minimum height of the sides **80***b* is no less than two inches.

Optionally, the floor pan **80** may include one or more drain ports in the bottom **80***a*, sides **80***b*, or both, to permit controlled drainage of spilled fluid or fuel from the floor pan **80** into a catch container.

As can be appreciated from the examples herein, the station **20** permits continuous hot-refueling with enhanced reliability. While there might generally be a tendency to choose wireless sensor communication for convenience, a hard-wired approach mitigates the potential for signal interference that can arise with wireless. Moreover, by hard-wiring the sensors through the hoses to the controller, wired communication lines are protected from exposure and do not pose additional concerns for workers on a site. Additionally, the spatial layout of the station **20** permits enhanced station performance in combination with good packaging and aisle size for worker movement.

FIG. **9** illustrates a system **69** for remotely monitoring and/or managing at least one mobile distribution station **20** (A). It is to be appreciated that the system **69** may include additional mobile distribution stations, shown in phantom at **20** (B), **20** (C), and **20** (D) (collectively mobile distribution stations **20**), for example. The mobile distribution stations **20** may be located at a single work site or located across several different work sites S**1** and S**2**. Each mobile distribution station **20** is in communication with one or more servers **71** that are remotely located from the mobile distribution stations **20** and work sites S**1**/S**2**. In most implementations, the communication will be wireless.

The server **71** may include hardware, software, or both that is configured to perform the functions described herein. The server **71** may also be in communication with one or more electronic devices **73**. The electronic device **73** is external of or remote from the mobile fuel distribution stations **20**. For example, the electronic device **73** may be, but is not limited to, a computer, such as a desktop or laptop computer, a cellular device, or tablet device. The electronic device **73** may communicate and interact in the system **69** via data connectivity, which may involve internet connectivity, cellular connectivity, software, mobile application, or combinations of these.

The electronic device **73** may include a display **73***a*, such as an electronic screen, that is configured to display the fuel operating parameter data of each of the mobile distribution stations **20**. As an example, the electronic device **73** may display in real-time the operating parameter data of each of the mobile distribution stations **20** in the system **69** to permit remote monitoring and management control of the mobile distribution stations **20**. For instance, the operating parameter data may include fuel temperature, fuel pressure, fuel flow, total amount of fuel distributed, operational settings (e.g., low and high fuel level thresholds), or other parameters.

The server **71** may also be in communication with one or more cloud-based devices **75**. The cloud-based device **75** may include one or more servers and a memory for communicating with and storing information from the server **71**.

The server **71** is configured to communicate with the mobile distribution stations **20**. Most typically, the server **71** will communicate with the controller **52** of the mobile distribution station **20**. In this regard, the controller **52** of each mobile distribution station **20** may be include hardware, software, or both that is configured for external communication with the server **71**. For example, each controller **52** may communicate and interact in the system **69** via data connectivity, which may involve internet connectivity, cellular connectivity, software, mobile application, or combinations of these.

The server **71** is configured to receive operating parameter data from the mobile distribution stations **20**. The operating parameter data may include or represent physical measurements of operating conditions of the mobile distribution station **20**, status information of the mobile distribution station **20**, setting information of the mobile distribution station **20**, or other information associated with control or management of the operation of the mobile distribution station **20**.

For example, the server **71** utilizes the information to monitor and auto-manage the mobile distribution station **20**. The monitoring and auto-management may be for purposes of identifying potential risk conditions that may require shutdown or alert, purposes of intelligently enhancing operation, or purposes of reading fuel or fluid levels in real-time via the sensors **50**. As an example, the server **71**

may utilize the information to monitor or display fuel or fluid levels, or determine whether the fuel operating parameter data is within a preset limit and send a control action in response to the operating parameter data being outside the preset limit. As will described in further detail below, the control action may be a shutdown instruction to the mobile fuel distribution stations **20**, an adjustment instruction to the mobile fuel distribution stations **20**, or an alert to the electronic device **73**.

FIG. **10** illustrates a workflow logic diagram of an example control method **77** which can be implemented with the system **69** or with other configurations of one or more mobile distribution stations **20** and one or more servers. In general, the illustrated method **77** can be used to provide a shutdown instruction or an alert if operating parameter data of one or more mobile distribution stations **20** is outside of a preset limit. For instance, if fuel pressure or fuel temperature in one of the mobile distribution stations **20** exceeds one or more limits, the method **77** shuts down the mobile distribution station **20** and/or sends an alert so that appropriate action can, if needed, be taken in response to the situation. In particular, in hot-refueling implementations, the ability to automatically shut down or to provide a remote alert may facilitate enhancement of reliable and safe operation.

Referring to FIG. **10**, one or more current or instantaneous operating parameters are read (i.e., by the controller **52**). An operating parameter may include, but is not limited to, fuel temperature and fuel pressure. Other parameters may additionally or alternatively be used, such as pump speed or power and fuel flow. Parameters may be first order parameters based on first order readings from sensor signals, or second order parameters that are derived or calculated from first order parameters or first order sensor signals. For instance, temperature is a first order parameter and direct detection of temperature to produce signals representative of temperature constitute first order sensor signals. The product of temperature and pressure, for example, is a second order parameter that is based on first order sensor signals of each of temperature and pressure. As will be appreciated, there may be additional types of second order parameters based on temperature, pressure, power, flow, etc., which may or may not be weighted in a calculation of a second order parameter.

In this example, the current operating parameter is compared with a prior operating parameter stored in memory in the controller **52**. A difference in the current operating parameter and the prior operating parameter is calculated to produce a change (delta) value in the operating parameter. The change value is used as the operating parameter data for control purposes in the method **77**. The operating parameter data thus represents the change in the operating parameter from the prior reading to the current reading. Use of the change value as the operating parameter data serves to reduce the amount of data that is to be sent in connection with the method **77**. For example, the actual operating parameter values may be larger than the change values and may thus require more memory and bandwidth to send than the change values. The change values are sampled and calculated at a predesignated interval rate. In this example, the interval rate is once per second. Each operating parameter is stored in memory for use as the next "prior" operating parameter for comparison with a subsequent "new" operating parameter reading. The controller **52** may be programmed to perform the above steps. As will be appreciated, the steps above achieve data efficiency, and actual values could alternatively or additionally be used if memory and bandwidth permit.

Each operating parameter data reading (i.e., change value) is published or sent via IoT (Internet of Things) Gateway to an IoT Platform, which may be implemented fully or partially on the server **71** and cloud device **75**. The operating parameter data may also contain additional information, such as but not limited to, metadata with time stamp information and identification of the individual mobile distribution station **20**. In this example, the operating parameter data of interest is associated with fuel pressure and fuel temperature. In the method **77**, the operating parameter data for fuel temperature and fuel pressure are compared to, respectively, a preset fuel temperature shutdown limit and a preset fuel pressure shutdown limit. The shutdown limits may be temperature and pressure limits corresponding to rated limits of the pump **30**, fuel line **32**, and manifold **38**, for example.

If the temperature or pressure are outside of the preset fuel temperature or pressure shutdown limits, the method **77** initiates a shutdown event. In this example, the shutdown event includes identifying the particular mobile distribution station **20** associated with the temperature or pressure that is outside of the preset limit, forming a shutdown instruction message, and publishing or sending the shutdown instruction message via the IoT Gateway to the corresponding identified mobile distribution station **20**.

Upon receiving the shutdown instruction message, the controller **52** of the identified mobile distribution station **20** validates and executes the shutdown instruction. For instance, shutdown may include shutting off the pump **30** and closing all of the control valves **44**. In this example, the method **77** includes a timing feature that waits for confirmation of shutdown. Confirmation may be generated by the controller **52** performing an electronic check of whether the pump **30** is off and the control valves **44** are closed. Confirmation may additionally or alternatively involve manual feedback via input into the controller **52** by a worker at the identified mobile distribution station **20**.

Once shutdown is confirmed by the controller **52**, confirmation of shutdown is published or sent via the Iot Gateway to the IoT Platform for subsequent issuance of an alert. If there is no confirmation of shutdown by a maximum preset time threshold, a non-confirmation of shutdown is published or sent for subsequent issuance of an alert.

If the temperature and/or pressure is not outside of the preset fuel temperature or pressure shutdown limits, the method **77** in this example continues to determine whether the fuel temperature and fuel pressure with are, respectively, outside of a preset fuel temperature threshold limit and a preset fuel pressure threshold limit. The threshold limits will typically be preset at levels which indicate a potential for shutdown conditions. For example, the threshold limits may be intermediate temperature or pressure levels which, if exceeded, may indicate an upward trend in temperature or pressure toward the shutdown limits. In one example, the threshold limits are rate of change thresholds. For instance, a change value in temperature and/or pressure that exceeds a corresponding threshold change limit may be indicative that temperature and/or pressure is rapidly elevating toward the shutdown condition.

In response to the temperature and/or pressure being outside of the preset fuel temperature or pressure threshold limits, the method **77** initiates an alert event. In this example, the alert event includes initiating an event notification. In the event notification, the method **77** conducts a lookup of notification channels and then issues an alert via one or more selected notification channels, such as an alert on the display **73***a*. As an example, the notification channels may be

selected by user preferences and may include alerts by email, SMS (short message service), and/or mobile device app notification (e.g., banners, badges, home screen alerts, etc.). The event notification is also used for alerts of confirmation and non-confirmation of shutdown. The method **77** thus provides capability to nearly instantaneously issue an alert that can be immediately and readily viewed in real-time on the electronic device **73** so that appropriate action, if needed, can be taken. In one example, such actions may include adjustment of operation settings of the mobile distribution station **20**, which may be communicated and implemented via the system **69** from the electronic device **73** to the mobile distribution station **20**.

FIG. **11** illustrates a workflow logic diagram of an example control management method **79** which can be implemented with the method **77** and with the system **69** or with other configurations of one or more mobile distribution stations **20** and one or more servers. For example, the method **79** is used to identify shutdown conditions and/or remotely intelligently auto-manage operation of one or more mobile distribution stations **20**. The initial portion of the method **79** with respect to generating operating parameters data may be similar to the method **77**; however, the method **79** uses the operating parameter data to calculate an efficiency score and identify shutdown conditions or other actions to be taken in response to the efficiency score. For example, the efficiency score is a second order parameter and is a calculation based on multiple fuel operating parameters selected from fuel temperature, fuel pressure, fuel flow, and time. The efficiency score is then compared to an efficiency score shutdown limit. If the calculated efficiency score exceeds the limit, the method **79** initiates the shutdown event as described above. As an example, the efficiency score is the product of a safety score multiplied by one or more of a temperature score, a pressure score, a flow rate score, a tank level score, or the sum of two or more of these scores. For instance, the efficiency score is as shown in Equation I below.

Efficiency Score=Safety Score×(Temperature Score+Pressure Score+Flow Rate Score+Tank Level Score). Equation I:

In one example, the safety score is a product of a safety factor and logic values of one or zero for each of the temperature score, the pressure score, the flow rate score, and the tank level score. Thus, if any of the temperature score, the pressure score, the flow rate score, or the tank level score fails, resulting in a logic value of zero, the efficiency score will be zero. In response to an efficiency score of zero, the method **79** initiates the shutdown event as described above. The logic values are assigned according to whether the given parameter is within a predetermined minimum/maximum range. If the parameter is within the range, the logic value is one and if the parameter is outside of the range, the value is zero. As an example, the safety score may be determined by:

Safety Score=(Safety Check Positive Response/Total Safety Checks)*(IF (Temperature Reading between MIN LIMIT and MAX LIMIT) THEN 1 ELSE 0))*(IF (Pressure Reading between MIN LIMIT and MAX LIMIT) THEN 1 ELSE 0))*(IF (Flow Rate Reading between MIN LIMIT and MAX LIMIT) THEN 1 ELSE 0))*(IF (Tank Inventory Reading between MIN LIMIT and MAX LIMIT) THEN 1 ELSE 0)),

wherein

Temperature Score=(((Temperature Reading−Min Limit)/Temperature Reading)+((Max Limit+Temperature Reading)/Temperature Reading)))/2,

Pressure Score=(((Pressure Reading−Min Limit)/Pressure Reading)+((Max Limit+Pressure Reading)/Pressure Reading)))/2,

Flow Rate Score=(((Flow Rate Reading−Min Limit)/Flow Rate Reading)+((Max Limit+Flow Rate Reading)/Flow Rate Reading)))/2, and

Tank Level Score=(((Tank Level Reading−Min Limit)/Tank Level Reading)+((Max Limit+Tank Level Reading)/Tank Level Reading)))/2.

In one example, the safety factor includes a calculation based on safety checks of a mobile distribution station **20**. For instance, the safety factor is the quotient of positive or passing safety checks divided by the total number of safety check made. A safety check may involve periodic validation of multiple parameters or conditions on the site of a station **20** and/or in the station **20**. As examples, the safety check may include validation that electrical power supply is fully functional (e.g., a generator), validation of oil levels (e.g., in a generator), validation of whether there are any work obstructions at the site, etc. Thus, each safety check may involve validation of a set of parameters and conditions. If validation passes, the safety check is positive and if validation does not pass the safety check is negative. As an example, if 5 safety checks are conducted for a station **20** and four of the checks pass and one does not pass, the safety factor is equal to four divided by five, or 0.8.

The method **79** also uses the efficiency score to actively intelligently auto-manage operation of one or more of the mobile distribution stations **20**. For example, the efficiency score is compared in the method **79** with an efficiency score threshold limit or efficiency score range. If the efficiency score is outside of the limit or range, the method **79** initiates an adjustment event to adjust settings of the operating parameters of the mobile distribution station **20**. For example, pumping rate or power may be changed to increase or decrease fuel pressure. In further examples in the table below, preset actions are taken in response to efficiency scores within preset ranges.

Efficiency Score	Action
<=1	SHUTDOWN
>1 AND <=2	ALERT
>2 AND <=3	ADJUST SETTINGS
>3 AND <=4	NO ACTION

The adjustment event may include forming an adjustment instruction message and publishing or sending the adjustment instruction message to the mobile distribution station **20** via the IoT Gateway. Upon receiving the adjustment instruction message the controller **52** of the mobile distribution station **20** validates and executes the message. The message constitutes a control action to change one or more of the operating parameters to move the efficiency score within the limit or range. As an example, pumping rate is changed to change fuel pressure. Other parameters may additionally or alternatively be adjusted to change the fuel efficiency score, such as but not limited to, fuel tank upper and lower thresholds, sequence of opening/closing control valves **44**, and number of control valves **44** that may be open

at one time. Thus, once implemented, the method **79** can serve to auto-adjust operation of one or more of the mobile distribution stations **20**, without human intervention, to achieve enhanced or optimize fuel distribution.

In one example, a rate of fuel consumption of one or more pieces of the equipment may be calculated, and the upper and/or lower fuel level threshold settings are changed in response to the calculated rate of fuel consumption. For instance, if consumption is lower or higher than a given fuel level threshold setting warrants, the fuel level threshold setting is responsively auto-adjusted up or down for more efficient operation. For a low consumption rate, there may be a downward adjustment of the lower fuel level threshold, since there is lower likelihood that the low consumption rate will lead to a fully empty condition in the equipment. Similarly, for a high consumption rate, there may be an upward adjustment of the lower fuel level threshold, since there is higher likelihood that the high consumption rate will lead to a fully empty condition in the equipment. Thus, the mobile distribution station **20** can be operated more efficiently and safely by distributing fuel at proper times to ensure filling the equipment with desired safety margins.

Similar to the shutdown instruction message described above, the method **79** may include a timing feature that waits for confirmation of adjustment. Once adjustment is confirmed by the controller **52**, confirmation of adjustment is published or sent via the Iot Gateway to the IoT Platform for subsequent issuance of an alert. If there is no confirmation of adjustment by a maximum preset time threshold, a non-confirmation of adjustment is published or sent for subsequent issuance of an alert. In further examples, the method **79** may exclude use of the efficiency score for purposes of shutdown or for purposes of intelligent auto-management. That is, the method **79** may employ the efficiency score for only one or the other of shutdown or intelligent auto-management.

Additionally or alternatively, the system **69** with one or more mobile distribution stations **20** and one or more servers may be used for centralized, intelligent auto-filling. For example, fuel levels may be tracked in real-time or near real-time. When a fuel level associated with one of the stations **20** reaches the lower threshold, described above, an instruction may be sent via the system **69** to active the pump **30** and open the appropriate control valve **44**. Moreover, the system **69** can ensure that there is minimal or zero delay time from the time of identifying the low threshold to the time that filling begins. Thus, at least a portion of the functionality of the controllers **52** may be remotely and centrally based in the server of the system **69**.

Although a combination of features is shown in the illustrated examples, not all of them need to be combined to realize the benefits of various embodiments of this disclosure. In other words, a system designed according to an embodiment of this disclosure will not necessarily include all of the features shown in any one of the Figures or all of the portions schematically shown in the Figures. Moreover, selected features of one example embodiment may be combined with selected features of other example embodiments.

The preceding description is exemplary rather than limiting in nature. Variations and modifications to the disclosed examples may become apparent to those skilled in the art that do not necessarily depart from this disclosure. The scope of legal protection given to this disclosure can only be determined by studying the following claims.

What is claimed is:

1. A distribution station comprising:

a mobile trailer;

a pump on the mobile trailer;

first and second manifolds on the mobile trailer and fluidly connected with the pump;

a plurality of reels on the mobile trailer;

a plurality of hoses connected, respectively, with the reels, wherein a portion of the reels are connected with the first manifold and another portion of the reels are connected with the second manifold;

a plurality of valves on the mobile trailer, each of the valves situated between one of the first or second manifolds and a respective different one of the hoses; and

a plurality of fluid level sensors, each of the fluid level sensors being associated a respective different one of the hoses,

wherein the reels are arranged on first and second opposed sides in the mobile trailer, with an aisle walkway down the middle of the mobile trailer.

2. The distribution station as recited in claim **1**, wherein the reels on each of the first and second opposed sides are arranged in upper and lower rows of reels.

3. The distribution station as recited in claim **2**, further comprising first and second support racks on which the reels are supported, the first support rack arranged on the first side and the second support rack arranged on the second side.

4. The distribution station as recited in claim **3**, wherein the aisle walkway has an aisle width and the reels have a reel diameter, and the aisle width is greater than the reel diameter by a factor of at least 1.3.

5. The distribution station as recited in claim **4**, wherein the trailer has a trailer width of no greater than about 96 inches.

6. The distribution station as recited in claim **2**, wherein a ratio of a number of reels in the upper row to a number of reels in the lower row is 1:1.

7. The distribution station as recited in claim **1**, wherein the mobile trailer includes trailer end wall that has an outside door, an inside wall that defines first and second compartments in the mobile trailer, the outside door opening into the first compartment, and at least the manifolds and the reels are in the first compartment.

8. The distribution station as recited in claim **7**, wherein the inside wall includes an inside door providing access between the first compartment and the second compartment, the aisle walkway extending from the outside door to the inside door.

9. The distribution station as recited in claim **7**, further comprising a controller in the second compartment, the controller configured to operate the valves.

10. The distribution station as recited in claim **9**, wherein the second compartment is insulated with a fire resistant or retardant material.

11. The distribution station as recited in claim **1**, wherein the aisle walkway has an aisle width and the reels have a reel diameter, and the aisle width is greater than the reel diameter by a factor of at least 1.3.

12. The distribution station as recited in claim **11**, wherein the aisle width is greater than the reel diameter by a factor of at least 1.5.

13. The distribution station as recited in claim **1**, wherein the aisle walkway has an aisle width and the mobile trailer has a trailer width, and a ratio of the trailer width to the aisle width is no greater than 5.

14. The distribution station as recited in claim **13**, wherein the ratio of the trailer width to the aisle width is greater than 2.

15. The distribution station as recited in claim **14**, wherein the ratio of the trailer width to the aisle width is equal to or less than 4.

16. The distribution station as recited in claim **1**, further comprising a floor pan in the mobile trailer.

17. A distribution station comprising:

a mobile trailer;

a pump on the mobile trailer;

first and second manifolds on the mobile trailer and fluidly connected with the pump;

a plurality of reels on the mobile trailer;

a plurality of hoses connected, respectively, with the reels, wherein a portion of the reels are connected with the first manifold and another portion of the reels are connected with the second manifold;

a plurality of valves on the mobile trailer, each of the valves situated between one of the first or second manifolds and a respective different one of the hoses; and

a plurality of fluid level sensors, each of the fluid level sensors being associated a respective different one of the hoses,

wherein the mobile trailer includes first and second opposed trailer side walls, and a first group of the hoses are deployable from the first trailer side wall and a second group of the hoses are deployable from the second trailer side wall.

18. The distribution station as recited in claim **17**, wherein the reels are arranged on first and second opposed sides in the mobile trailer such that there is an aisle walkway down the middle of the mobile trailer.

19. The distribution station as recited in claim **18**, wherein the reels on each of the first and second opposed sides are arranged in upper and lower rows of reels.

20. The distribution station as recited in claim **19**, wherein the aisle walkway has an aisle width and the reels have a reel diameter, and the aisle width is greater than the reel diameter by a factor of at least 1.3.

21. The distribution station as recited in claim **20**, wherein the mobile trailer has a trailer width of no greater than about 96 inches.

22. The distribution station as recited in claim **17**, further comprising a floor pan in the mobile trailer.

* * * * *

Claim Charts – CORE AUTOMATED FUELING SOLUTIONS

I. US10815118B2

1. A mobile distribution station comprising:	Permian Global Inc. ("CORE") markets the CORE Automated Fueling System ("the System") as a mobile frac fueling distribution station. (https://manticorefuels.com/services.html)
a mobile trailer; a pump on the mobile trailer; a manifold on the mobile trailer and connected with the pump;	 The System includes a mobile trailer, a pump on the mobile trailer, and a manifold on the mobile trailer and connected with the pump. CORE markets the System as including "Proprietary fuel valves that avoid clogging and spills, *enhance pump performance* and eliminate Non-Productive Time (NPT)." The System includes a manifold that is connected with the pump in order to deliver fuel to the "hose reels" shown below. (https://corefueling.com/our-solutions/automated-fueling/)
a plurality of reels on the mobile trailer; a plurality of flow passages, each said flow passage being connected to the manifold and running through a respective one of the reels; a plurality of hoses, each said hose being connected with a respective one of the flow passages via a respective one of the reels;	 The System includes a plurality of reels on the mobile trailer, a plurality of flow passages, each said flow passage being connected to the manifold and running through a respective one of the reels, a plurality of hoses, each said hose being connected with a respective one of the flow passages via a respective one of the reels. CORE markets the System as including "26+ custom-built heavy-duty

	motorized hose reels with over 450 feet of capacity, dynamic flow rate modulation and predictive fuel consumption technology." (https://corefueling.com/our-solutions/automated-fueling/)
a plurality of valves on the mobile trailer, each said valve situated between the manifold and a respective different one of the reels and being operable to control fluid flow through a respective one of the flow passages;	The System includes a plurality of valves on the mobile trailer, each said valve situated between the manifold and a respective different one of the reels and being operable to control fluid flow through a respective one of the flow passages. CORE markets the System as including "Proprietary fuel valves that avoid clogging and spills, enhance pump performance and eliminate Non-Productive Time (NPT)" and having "26+ custom-built heavy-duty motorized hose reels with over 450 feet of capacity, dynamic flow rate modulation and predictive fuel consumption technology." (https://corefueling.com/our-solutions/automated-fueling/)
a plurality of fluid level sensors, each said fluid level sensor being connected or connectable with a respective different one of the hoses; and a controller configured to operate the valves responsive to fluid level thresholds to control fluid flow to the hoses.	The System includes a plurality of fluid level sensors, each said fluid level sensor being connected or connectable with a respective different one of the hoses, and a controller configured to operate the valves responsive to fluid level thresholds to control fluid flow to the hoses. CORE markets the System as enabling users to "Remove workers from the hot zone, eliminate spills and lower risk exposure with 24/7 Command Center Monitoring." CORE also mentions "dynamic flow rate modulation and predictive fuel consumption technology" via each one of the hose reels, and "Proprietary fuel valves that avoid clogging and spills." (https://corefueling.com/our-solutions/automated-fueling/) (CORE Trademark Application)

II. US10974955B2

1. A mobile distribution station comprising:	CORE markets the System as a mobile frac fueling distribution station. (https://manticorefuels.com/services.html)
a container including first and second opposed side walls that join first and second opposed end walls; a pump in the container;	 The System includes a container (shown above) including first and second opposed side walls that join first and second opposed end walls, and a pump in the container. CORE markets the System as including "Proprietary fuel valves that avoid clogging and spills, *enhance pump performance* and eliminate Non-Productive Time (NPT)." (https://corefueling.com/our-solutions/automated-fueling/).
first and second manifolds in the container and fluidly connected with the pump a plurality of reels in the container; a plurality of hoses, each said hose connected with a different one of the reels, wherein a portion of the reels are connected to be fed from the first manifold and another portion of the reels are connected to be fed from the second manifold;	 The System includes first and second manifolds in the container and fluidly connected with the pump, a plurality of reels in the container, and a plurality of hoses, each said hose connected with a different one of the reels, wherein a portion of the reels are connected to be fed from the first manifold and another portion of the reels are connected to be fed from the second manifold. CORE markets the system as including "26+ custom-built heavy-duty motorized hose reels with over 450 feet of capacity, dynamic flow rate modulation and predictive fuel consumption technology." Because only the hoses of the "hose reels" are visible, the reels are necessarily in the mobile trailer.

	  The "hose reels" of the System are distributable on opposed sides of the container, such that there is a first manifold connected to the pump and responsible for delivering fuel to a portion of the hose reels on a respective one of the opposed sides, and a second manifold connected to the pump and responsible for delivering fuel to another portion of the hose reels on a respective different one of the opposed sides. (https://corefueling.com/our-solutions/automated-fueling/).
a plurality of valves in the container, each said valve situated between one of the first or second manifolds and a respective different one of the reels;	The System includes a plurality of valves in the container, each said valve situated between one of the first or second manifolds and a respective different one of the reels. CORE markets the System as including "Proprietary fuel valves that avoid clogging and spills, enhance pump performance and eliminate Non-Productive Time (NPT)" and "26+ custom-built heavy-duty motorized hose reels with over 450 feet of capacity, dynamic flow rate modulation and predictive fuel consumption technology." (https://corefueling.com/our-solutions/automated-fueling/).
a plurality of fluid level sensors, each said fluid level sensor being associated with a different one of the hoses; and a controller configured to individually open and close the valves responsive to the fluid level sensors.	The System includes a plurality of fluid level sensors, each said fluid level sensor being associated with a different one of the hoses and a controller configured to individually open and close the valves responsive to the fluid level sensors. CORE markets the system as enabling users to "Remove workers from the hot zone, eliminate spills and lower risk exposure with 24/7 Command Center Monitoring." CORE also mentions "dynamic flow rate modulation and predictive fuel consumption technology" via each one of the hose reels, and "Proprietary fuel valves that avoid clogging and spills." (https://corefueling.com/our-solutions/automated-fueling/).

	  (CORE Trademark Application)

III. US9586805B1

1. A mobile distribution station comprising:	CORE markets the system below as a mobile frac fueling distribution station. (https://manticorefuels.com/services.html)
a mobile trailer; a pump on the mobile trailer;	 The System includes a mobile trailer, and a pump on the mobile trailer. CORE markets the System as including "Proprietary fuel valves that avoid clogging and spills, *enhance pump performance* and eliminate Non-Productive Time (NPT)." (https://corefueling.com/our-solutions/automated-fueling/).
first and second manifolds on the mobile trailer and fluidly connected with the pump; a plurality of reels on the mobile trailer; a plurality of hoses connected, respectively, with the reels, wherein a portion of the reels are connected with the first manifold and another portion of the reels are connected with the second manifold;	 The system includes first and second manifolds on the mobile trailer and fluidly connected with the pump, a plurality of reels on the mobile trailer, and a plurality of hoses connected, respectively, with the reels, wherein a portion of the reels are connected with the first manifold and another portion of the reels are connected with the second manifold. CORE markets the system as including "26+ custom-built heavy-duty motorized hose reels with over 450 feet of capacity, dynamic flow rate modulation and predictive fuel consumption technology." Because only the hoses of the "hose reels" are visible, the reels are necessarily on the mobile trailer.

	  Furthermore, as shown above, the "hose reels" of the CORE system are distributable on opposed sides of the mobile trailer, such that there is a first manifold connected to the pump and responsible for delivering fuel to a portion of the hose reels on a respective one of the opposed sides, and a second manifold connected to the pump and responsible for delivering fuel to another portion of the hose reels on a respective different one of the opposed sides. (https://corefueling.com/our-solutions/automated-fueling/).
a plurality of valves on the mobile trailer, each of the valves situated between one of the first or second manifolds and a respective different one of the hoses; and	The System includes a plurality of valves on the mobile trailer, each of the valves situated between one of the first or second manifolds and a respective different one of the hoses. CORE markets the system as including "Proprietary fuel valves that avoid clogging and spills, enhance pump performance and eliminate Non-Productive Time (NPT)" and "26+ custom-built heavy-duty motorized hose reels with over 450 feet of capacity, dynamic flow rate modulation and predictive fuel consumption technology." (https://corefueling.com/our-solutions/automated-fueling/).
a plurality of fluid level sensors, each of the fluid level sensors being associated a respective different one of the hoses,	The System includes a plurality of fluid level sensors, each of the fluid level sensors being associated a respective different one of the hoses. CORE markets the system as enabling users to "Remove workers from the hot zone, eliminate spills and lower risk exposure with 24/7 Command Center Monitoring." CORE also mentions "dynamic flow rate modulation and predictive fuel consumption technology" via each one of the hose reels. (https://corefueling.com/our-solutions/automated-fueling/).

	 (CORE Trademark Application)
wherein the reels are arranged on first and second opposed sides in the mobile trailer, with an aisle walkway down the middle of the mobile trailer.	 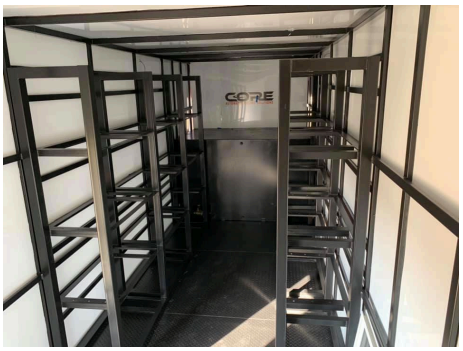 The System includes the reels are arranged on first and second opposed sides in the mobile trailer, with an aisle walkway down the middle of the mobile trailer. The System is configured to accommodate the "hose reels" on each side of the trailer such that an aisle walkway is established down the middle of the mobile trailer.

CARLSON, GASKEY & OLDS
A PROFESSIONAL CORPORATION

David L. Atallah
Todd W. Barrett
Timothy C. Bradley
Stephen A. Burch
Karin H. Butchko
John E. Carlson
Anthony P. Cho
Benjamin J. Coon
Jessica Fleetham
David J. Gaskey
William S. Gottschalk

400 WEST MAPLE ROAD
SUITE 350
BIRMINGHAM, MI 48009

Telephone 248.988.8360
Facsimile 248.988.8363

Quincy J. Harrison
Matthew L. Koziarz
Kerrie A. Laba
Timothy J. Murphy
Theodore W. Olds, III
Michael J. Schwartz
Stephen A. Sequin
John M. Siragusa
Steven Susser
Alex Szypa
Brian S. Tobin

July 19, 2022

Direct Dial: 248.283.0734
Email: ssusser@cgolaw.com

VIA U.S. MAIL AND EMAIL

Ryan Burries
Chief Operating Officer
Manticore Fuels, LLC
2419 W. Murphy St.
Odessa, TX 79763-4804

Re: Infringement of Patents Owned by Fuel Automation Station, LLC

Dear Mr. Burries:

I am an attorney for Fuel Automation Station, LLC ("FAS"), creators of the patented Fuel Automation Station automated fueling solution. FAS is the owner of US Patent Nos. 10,815,118, 10,974,955, and 9,586,805. It has come to our attention that Manticore Fuels, LLC ("Manticore") is infringing certain claims of the '118, '955, and '805 Patents. FAS therefore demands that Manticore immediately cease its infringing activity and desist from such infringing activity in the future. A copy of each patent is enclosed for your reference.

Your company's website describes the CORE Automated Fueling System and we compared it against the '118, '955, and '805 Patents. Based on our comparison, we have determined that your manufacture, use, offer for sale, and/or sale of the CORE Automated Fueling Solutions infringe at least claim 1 of each of the '118, '955, and '805 Patents in violation of Section 271 of the Patent Act.

Attached to this letter are claim charts that illustrate how the CORE Automated Fueling Solution meets each limitation of a representative claim of each of the '118, '955, and '805 Patents. Should you believe any of our allegations in the claim charts is wrong, please let us know.

Moreover, should Manticore's infringement be found to be willful, Manticore may be liable for enhanced damages and attorneys' fees incurred by FAS to enforce its rights. The Patent Act provides that once infringement has been established, a district court may "increase the damages up to three times the amount found or assessed." 35 U.S.C. § 284.

Patent infringement is a serious matter and FAS expects others to respect its patent rights. However, under the circumstances, FAS may be prepared to try to resolve this matter amicably.

Please contact me by August 1, 2022 so that we can arrange for a convenient time to discuss a possible resolution. If you prefer to have your legal counsel handle this, I would be grateful if you could have him contact me.

Very Truly Yours,

CARLSON, GASKEY & OLDS, PC

Steven Susser

cc: Todd Parsapour

US010815118B2

(12) **United States Patent**
Shock

(10) **Patent No.: US 10,815,118 B2**
(45) **Date of Patent: *Oct. 27, 2020**

(54) **MOBILE DISTRIBUTION STATION HAVING SENSOR COMMUNICATION LINES ROUTED WITH HOSES**

(71) Applicant: **Fuel Automation Station, LLC**, Birmingham, MI (US)

(72) Inventor: **Ricky Dean Shock**, Victoria, TX (US)

(73) Assignee: **FUEL AUTOMATION STATION, LLC**, Birmingham, MI (US)

(*) Notice: Subject to any disclaimer, the term of this patent is extended or adjusted under 35 U.S.C. 154(b) by 88 days.

This patent is subject to a terminal disclaimer.

(21) Appl. No.: **16/148,403**

(22) Filed: **Oct. 1, 2018**

(65) **Prior Publication Data**

US 2019/0031496 A1 Jan. 31, 2019

Related U.S. Application Data

(63) Continuation of application No. 15/290,304, filed on Oct. 11, 2016, now Pat. No. 10,087,065.

(51) **Int. Cl.**
B67D 7/04 (2010.01)
B67D 7/46 (2010.01)
(Continued)

(52) **U.S. Cl.**
CPC ***B67D 7/465*** (2013.01); ***B67D 7/04*** (2013.01); ***B67D 7/40*** (2013.01); ***B67D 7/845*** (2013.01); *B67D 2210/0006* (2013.01)

(58) **Field of Classification Search**
CPC B67D 7/465; B67D 7/40; B67D 7/845; B67D 2210/0006
(Continued)

(56) **References Cited**

U.S. PATENT DOCUMENTS

2,340,070 A 1/1944 McCauley et al.
2,516,150 A 7/1950 Samiran
(Continued)

FOREIGN PATENT DOCUMENTS

DE 1147397 4/1963
DE 20106400 10/2001
(Continued)

OTHER PUBLICATIONS

Shimazaki, H. (1986). Development of centralized fueling and management system of kerosene heating machine. Nisseki Technical Review, vol. 28(4). Jul. 1986. pp. 184-188.
(Continued)

Primary Examiner — Nicolas A Arnett
(74) *Attorney, Agent, or Firm* — Carlson, Gaskey & Olds, P.C.

(57) **ABSTRACT**

A distribution station includes a mobile trailer, a pump, a manifold connected with the pump, reels, flow passages connected to the manifold and running through the reels, hoses, connected the flow passages via the reels, valves situated between the manifold and the reels and operable to control fluid flow through the flow passages, fluid level sensors connected or connectable with the hoses, and a controller configured to operate the valves responsive to fluid level thresholds to control fluid flow to the hoses.

18 Claims, 4 Drawing Sheets

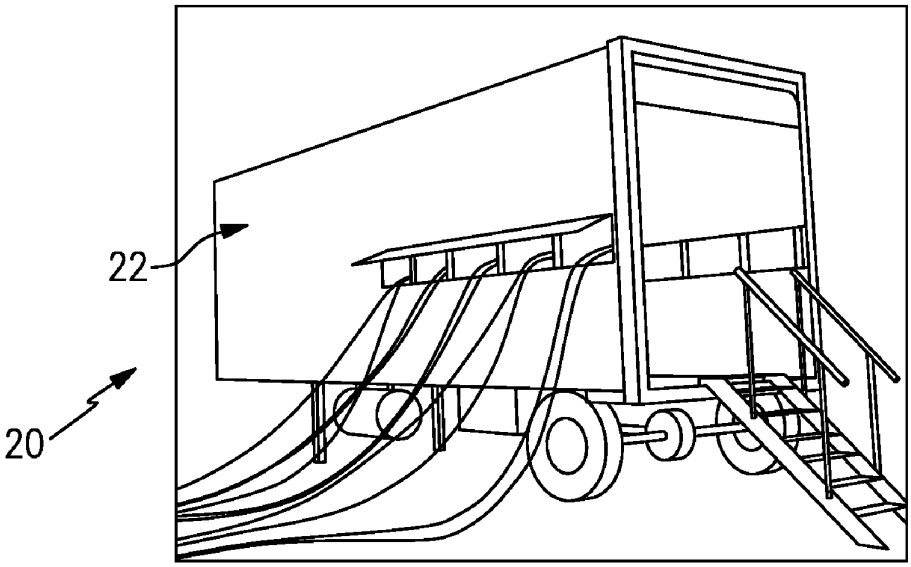

(51) **Int. Cl.**
B67D 7/40 (2010.01)
B67D 7/84 (2010.01)

(58) **Field of Classification Search**
USPC 141/94–95, 231
See application file for complete search history.

(56) **References Cited**

U.S. PATENT DOCUMENTS

2,769,572	A	11/1956	Harman et al.	
2,777,461	A	1/1957	Wildhaber	
2,966,921	A	1/1961	Whiteman	
3,028,010	A	4/1962	Headrick	
3,136,295	A	6/1964	Gramo	
3,547,141	A	12/1970	Alexander	
3,605,798	A	9/1971	Green et al.	
3,618,643	A	11/1971	Thomson	
3,625,399	A	12/1971	Heisler	
3,677,284	A	7/1972	Mendez	
3,881,509	A	5/1975	Newton	
4,139,019	A	2/1979	Bresie et al.	
4,284,210	A	8/1981	Horak	
4,511,311	A	4/1985	Olson	
4,591,115	A	5/1986	DeCarlo	
4,651,788	A	3/1987	Grosskreuz et al.	
4,728,005	A	3/1988	Jacobs et al.	
4,930,665	A	6/1990	Devine	
5,406,988	A	4/1995	Hopkins	
5,454,408	A	10/1995	DiBella et al.	
5,465,766	A	11/1995	Siegele et al.	
5,503,199	A	4/1996	Whitley, II et al.	
5,538,051	A	7/1996	Brown et al.	
5,551,309	A	9/1996	Goossens et al.	
5,651,400	A	7/1997	Corts et al.	
5,660,358	A	8/1997	Grafwallner et al.	
5,708,424	A	1/1998	Orlando et al.	
5,749,339	A	5/1998	Graham et al.	
5,887,567	A	3/1999	White	
5,927,603	A	7/1999	McNabb	
5,884,675	A	12/1999	Krasnov	
6,098,646	A	8/2000	Hennemann et al.	
6,206,056	B1	3/2001	Lagache	
6,564,615	B1	5/2003	Carter	
6,601,000	B1	7/2003	Barlian et al.	
6,651,706	B2	11/2003	Litt	
6,697,705	B2	2/2004	Johnson et al.	
6,745,801	B1	6/2004	Cohen	
6,755,225	B1	6/2004	Niedwiecki et al.	
6,761,194	B1	7/2004	Blong	
6,779,569	B1	8/2004	Teer, Jr. et al.	
6,786,245	B1	9/2004	Eichelberger et al.	
7,063,276	B2	6/2006	Newton	
7,106,026	B2	9/2006	Moore	
7,353,808	B2	4/2008	Kakoo	
7,415,995	B2	8/2008	Plummer et al.	
7,458,543	B2	12/2008	Cutler et al.	
7,568,507	B2	8/2009	Farese et al.	
7,602,143	B2	12/2009	Capizzo	
7,628,182	B2	12/2009	Poulter	
7,937,215	B2	5/2011	Humphrey	
7,938,151	B2	5/2011	Hockner	
8,069,885	B2	12/2011	Kederer	
8,448,750	B2	5/2013	Gaugush et al.	
9,346,662	B2	5/2016	Van Vliet et al.	
9,371,830	B2	6/2016	Moffitt, Jr.	
9,371,831	B2	6/2016	Moffitt, Jr.	
9,434,598	B2	9/2016	Pick	
9,586,805	B1	3/2017	Shock	
9,725,295	B2	8/2017	McKay	
9,790,080	B1 *	10/2017	Shock	B67D 7/3272
9,815,683	B1 *	11/2017	Kalala	B67D 7/362
9,981,840	B2 *	5/2018	Shock	B67D 7/465
10,087,065	B2 *	10/2018	Shock	B67D 7/465
10,150,662	B1 *	12/2018	Shock	B67D 7/74
10,196,258	B2 *	2/2019	Kalala	B67D 7/40
10,289,126	B2 *	5/2019	Shock	G05D 9/12
10,303,190	B2 *	5/2019	Shock	G05D 9/12
10,442,676	B1 *	10/2019	Walther	B65H 75/4478
10,513,426	B2 *	12/2019	Shock	B67D 7/3218
2001/0017815	A1	8/2001	Ackermann et al.	
2004/0163731	A1	8/2004	Eichelberger	
2004/0187950	A1	9/2004	Cohen	
2005/0109561	A1	5/2005	Chopra	
2007/0079891	A1	4/2007	Farese et al.	
2007/0164031	A1	7/2007	Holz	
2007/0181212	A1	8/2007	Fell	
2011/0197988	A1	8/2011	Van Vliet	
2016/0076533	A1	3/2016	Moffitt, Jr.	
2019/0119096	A1 *	4/2019	Haile	B67D 7/0401

FOREIGN PATENT DOCUMENTS

DE	10309307	9/2004
DE	102006025025	12/2006
DE	102006038652	2/2008
EP	0161042	11/1985
EP	0433041	6/2001
GB	2485832	5/2012
RU	28347	3/2003
RU	91135	1/2010
RU	2452668	1/2012
SU	949644	8/1982
WO	0177006	10/2001
WO	03029721	4/2003
WO	03093118	11/2003
WO	2006005686	1/2006
WO	2006116572	11/2006
WO	2007087849	8/2007
WO	2008083830	7/2008
WO	2009026607	3/2009
WO	20090608065	6/2009

OTHER PUBLICATIONS

Technical Document. Surface vehicle standard. SAE International. Sep. 2014. pp. 1-5.
Oilfield Business: Technologies. Frac Shack Inc. introduces world's first Bi-Fuel Distribution Unit for hydraulic fracturing industry. Texas Oil & Gas: The National Magazine for Oil & Gas in Texas. vol. 4, Issue 2. 2015. p. 27.
Frac Shack International. Publications & Endorsements. Retrieved Aug. 23, 2016 from: http://www.fracshack.com.
Frac Shack International. Technology. Retrieved Aug. 23, 2016 from: http://www.fracshack.com.
Frac Shack International. Design Benefits. Retrieved Aug. 23, 2016 from: http://www.fracshack.com.
Frac Shack International. Service. Retrieved Aug. 23, 2016 from: http://www.fracshack.com.
Frac Shack International. Frac Shack Series—Series A. Retrieved Aug. 23, 2016 from: http://www.fracshack.com.
Frac Shack International. Frac Shack Series—Series B. Retrieved Aug. 23, 2016 from: http://www.fracshack.com.
Frac Shack International. Frac Shack Series—Series C. Retrieved Aug. 23, 2016 from: http://www.fracshack.com.
Frac Shack International. Frac Shack Series—Series D. Retrieved Aug. 23, 2016 from: http://www.fracshack.com.
Frac Shack International. Frac Shack Series—Series E. Retrieved Aug. 23, 2016 from: http://www.fracshack.com.
Frac Shack International. Frac Shack Series—Series EG. Retrieved Aug. 23, 2016 from: http://www.fracshack.com.
Mann Tek. Dry Disconnect Couplings. Retrieved Jul. 22, 2016 from: http://www.manntek.com/products/drydisconnectcouplings p. 1-4.
Mann Tek. Dry Aviation Couplings. Retrieved Jul. 22, 2016 from: http://www.manntek.com/products/dryaviationcouplings p. 1-4.
Waterman, J. (2013). Better Safe than Sorry: Frac Shack a welcome addition to the oil patch. Jan. 2, 2013. Retrieved Aug. 23, 2016 from: http://www.pipelinenewsnorth.ca/better-safe-than-sorry-1.1123066.

* cited by examiner

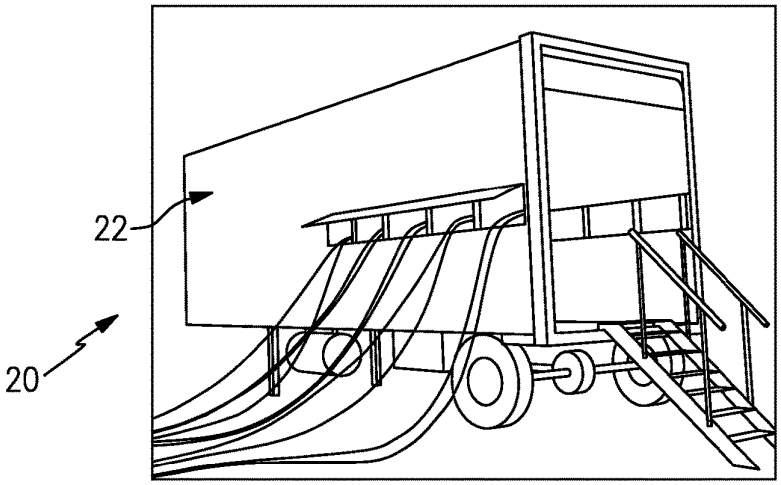
22
20

FIG.1

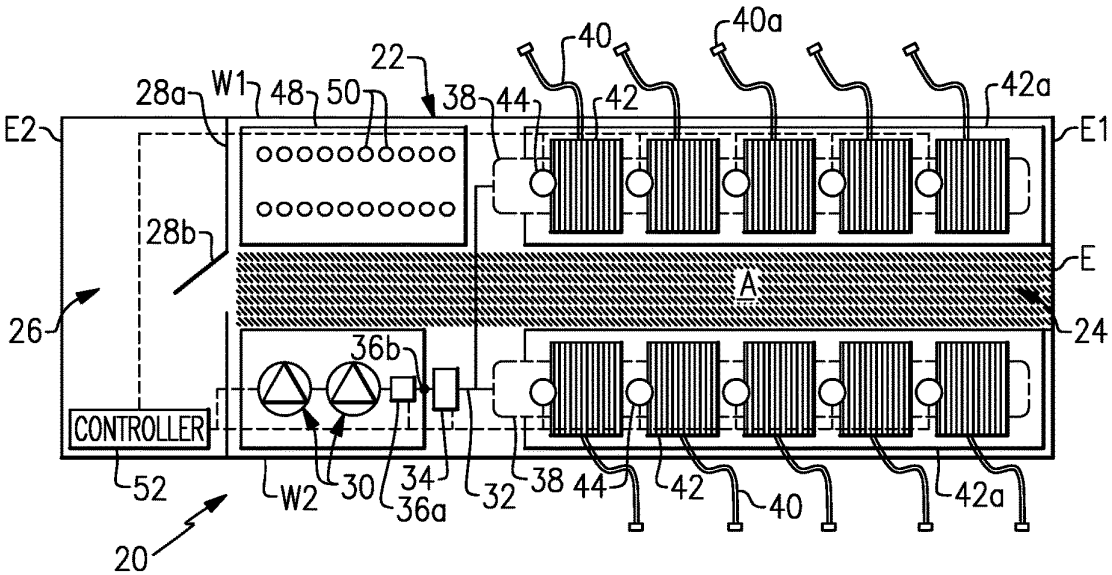
22
40
40a
28a
W1
48
50
38
44
42
42a
E2
E1
28b
E
A
26
24
36b
CONTROLLER
52
W2
30
34
36a
32
38
44
42
40
42a
20

FIG.2

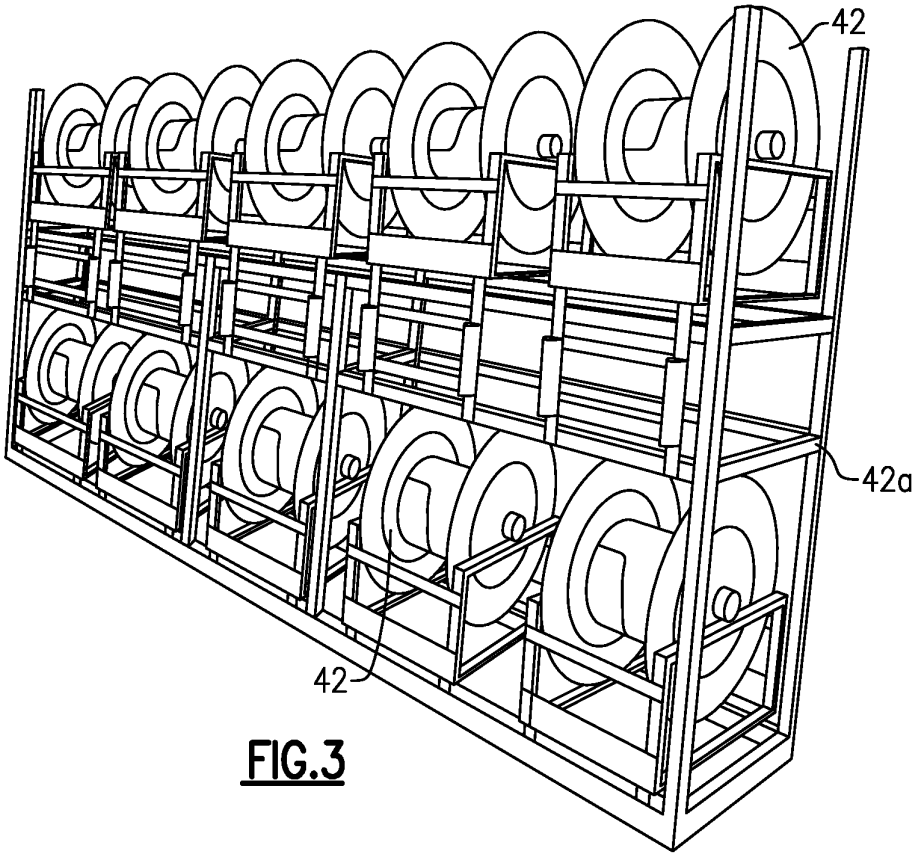

FIG.3

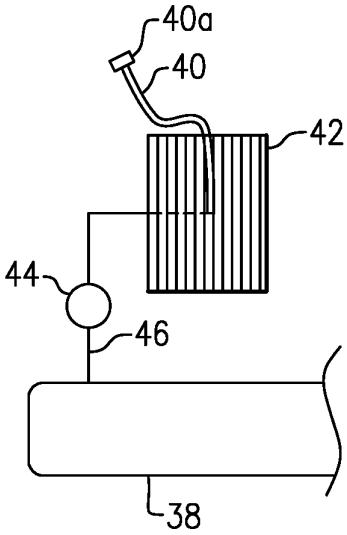

FIG.4

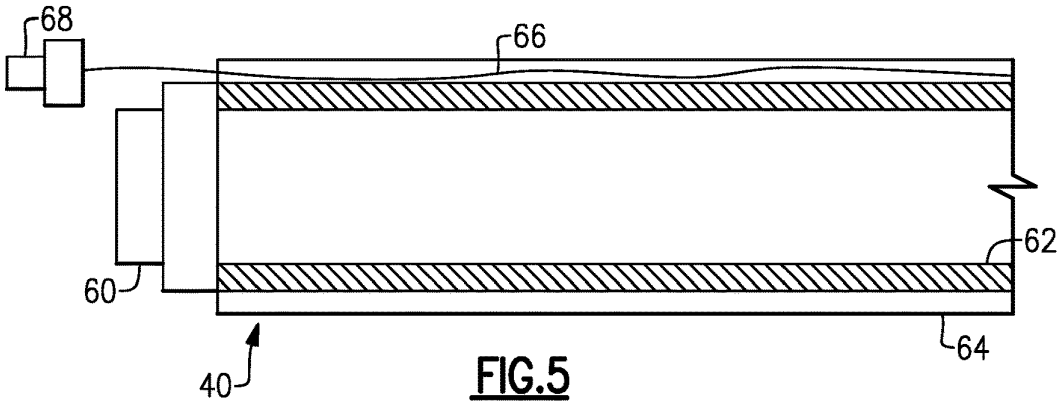

FIG.5

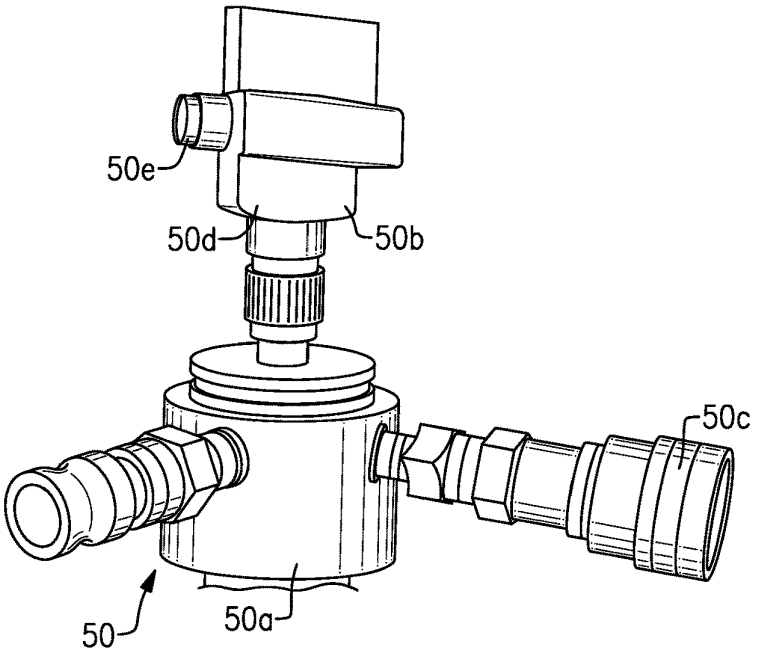

FIG.6

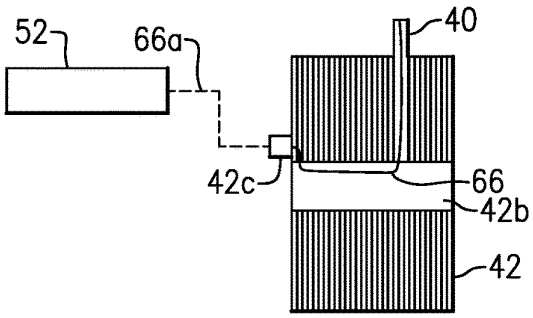

FIG.7

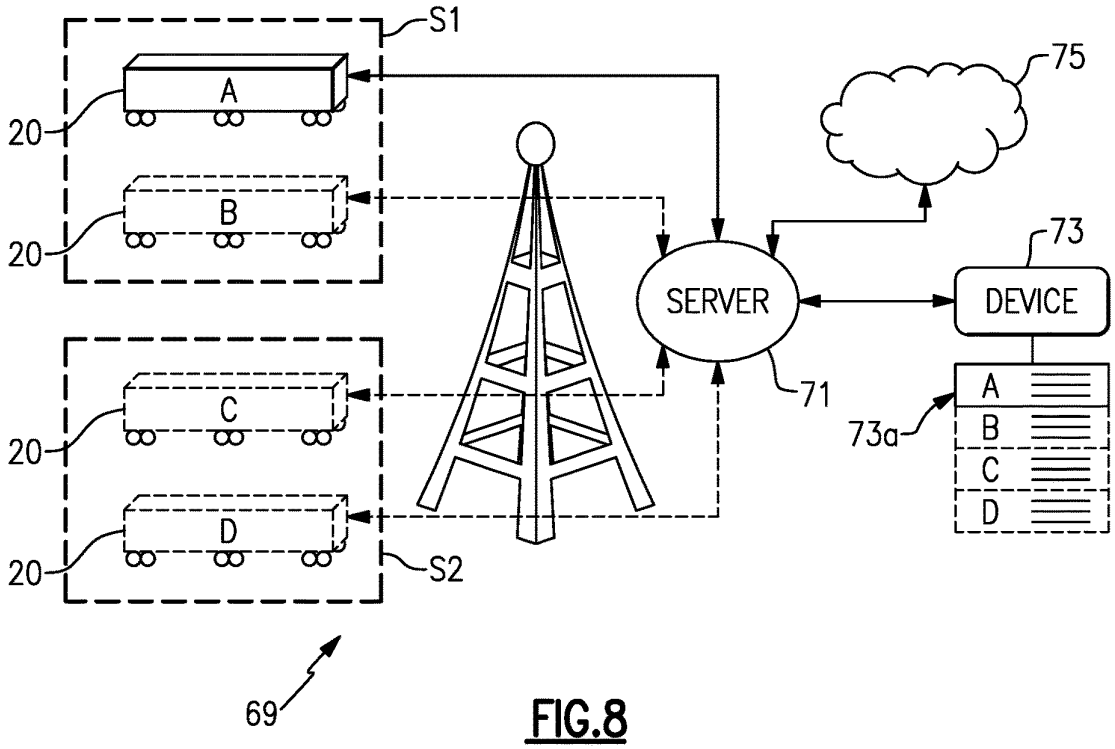

FIG.8

MOBILE DISTRIBUTION STATION HAVING SENSOR COMMUNICATION LINES ROUTED WITH HOSES

CROSS-REFERENCE TO RELATED APPLICATION

The present disclosure is a continuation of U.S. patent application Ser. No. 15/290,304 filed Oct. 11, 2016.

BACKGROUND

Hydraulic fracturing (also known as fracking) is a well-stimulation process that utilizes pressurized liquids to fracture rock formations. Pumps and other equipment used for hydraulic fracturing typically operate at the surface of the well site. The equipment may operate until refueling is needed, at which time the equipment may be shut-down for refueling. Shut-downs are costly and reduce efficiency. More preferably, to avoid shut-downs fuel is replenished in a hot-refueling operation while the equipment continues to run. This permits fracking operations to proceed continuously. However, hot-refueling can be difficult to reliably sustain for the duration of the fracking operation.

SUMMARY

A distribution station according to an example of the present disclosure includes a mobile trailer, a pump, a manifold connected with the pump, reels, flow passages connected to the manifold and running through the reels, hoses, connected the flow passages via the reels, valves situated between the manifold and the reels and operable to control fluid flow through the flow passages, fluid level sensors connected or connectable with the hoses, and a controller configured to operate the valves responsive to fluid level thresholds to control fluid flow to the hoses.

BRIEF DESCRIPTION OF THE DRAWINGS

The various features and advantages of the present disclosure will become apparent to those skilled in the art from the following detailed description. The drawings that accompany the detailed description can be briefly described as follows.

FIG. **1** illustrates an example mobile distribution station.

FIG. **2** illustrates an internal layout of a mobile distribution station.

FIG. **3** illustrates an isolated view of hose reels on a support rack used in a mobile distribution station.

FIG. **4** illustrates an example of a connection between a manifold, a control valve, and a reel.

FIG. **5** illustrates a sectioned view of an example hose for a mobile distribution station.

FIG. **6** illustrates an example of an integrated cap sensor for a mobile distribution station.

FIG. **7** illustrates an example of the routing of a sensor communication line through a reel in a mobile distribution station.

FIG. **8** illustrates a system that can be used to remotely monitor and manage one or more mobile distribution stations.

DETAILED DESCRIPTION

FIG. **1** illustrates a mobile distribution station **20** and FIG. **2** illustrates an internal layout of the station **20**. As will be

described, the station **20** may serve in a "hot-refueling" capacity to distribute fuel to multiple pieces of equipment while the equipment is running, such as fracking equipment at a well site. As will be appreciated, the station **20** is not limited to applications for fracking or for delivering fuel. The examples herein may be presented with respect to fuel delivery, but the station **20** may be used in mobile delivery of other fluids, in other gas/petroleum recovery operations, or in other operations where mobile refueling or fluid delivery will be of benefit.

In this example, the station **20** includes a mobile trailer **22**. Generally, the mobile trailer **22** is elongated and has first and second opposed trailer side walls W**1** and W**2** that join first and second opposed trailer end walls E**1** and E**2**. Most typically, the trailer **22** will also have a closed top (not shown). The mobile trailer **22** may have wheels that permit the mobile trailer **22** to be moved by a vehicle from site to site to service different hot-refueling operations. In this example, the mobile trailer **22** has two compartments. A first compartment **24** includes the physical components for distributing fuel, such as diesel fuel, and a second compartment **26** serves as an isolated control room for managing and monitoring fuel distribution. The compartments **24**/**26** are separated by an inside wall **28***a* that has an inside door **28***b*.

The first compartment **24** includes one or more pumps **30**. Fuel may be provided to the one or more pumps **30** from an external fuel source, such as a tanker truck on the site. On the trailer **22**, the one or more pumps **30** are fluidly connected via a fuel line **32** with a high precision register **34** for metering fuel. The fuel line **32** may include, but is not limited to, hard piping. In this example, the fuel line **32** includes a filtration and air eliminator system **36***a* and one or more sensors **36***b*. Although optional, the system **36***a* is beneficial in many implementations, to remove foreign particles and air from the fuel prior to delivery to the equipment. The one or more sensors **36***b* may include a temperature sensor, a pressure sensor, or a combination thereof, which assist in fuel distribution management.

The fuel line **32** is connected with one or more manifolds **38**. In the illustrated example, the station **20** includes two manifolds **38** that arranged on opposed sides of the compartment **24**. As an example, the manifolds **38** are elongated tubes that are generally larger in diameter than the fuel line **32** and that have at least one inlet and multiple outlets. Each hose **40** is wound, at least initially, on a reel **42** that is rotatable to extend or retract the hose **40** externally through one or more windows of the trailer **22**. Each reel **42** may have an associated motor to mechanically extend and retract the hose **40**.

As shown in an isolated view in FIG. **3**, the reels **42** are mounted on a support rack **42***a*. In this example, the support rack **42***a* is configured with upper and lower rows of reels **42**. Each row has five reels **42** such that each support rack **42***a* provides ten reels **42** and thus ten hoses **40**. There are two support racks **42***a* (FIG. **2**) arranged on opposed sides of the first compartment **24**, with an aisle (A) that runs between the support racks **42***a* from an outside door E to the inside door **28***b*. The station **20** therefore provides twenty hoses **40** in the illustrated arrangement, with ten hoses **40** provided on each side of the station **20**. As will be appreciated, fewer or additional reels and hoses may be used in alternative examples.

As shown in a representative example in FIG. **4**, each hose **40** is connected to a respective one of the reels **42** and a respective one of a plurality of control valves **44**. For example, a secondary fuel line **46** leads from the manifold **38** to the reel **42**. The control valve **44** is in the secondary

fuel line **46**. The control valve **44** is moveable between open and closed positions to selectively permit fuel flow from the manifold **38** to the reel **42** and the hose **40**. For example, the control valve **44** is a powered valve, such as a solenoid valve.

In the illustrated example, the first compartment **24** also includes a sensor support rack **48**. The sensor support rack **48** holds integrated fuel cap sensors **50** (when not in use), or at least portions thereof. When in use, each integrated fuel cap sensor **50** is temporarily affixed to a piece of equipment (i.e., the fuel tank of the equipment) that is subject to the hot-refueling operation. Each hose **40** may include a connector end **40***a* and each integrated fuel cap sensor **50** may have a corresponding mating connector to facilitate rapid connection and disconnection of the hose **40** with the integrated fuel cap sensor **50**. For example, the connector end **40***a* and mating connector on the integrated fuel cap sensor **50** form a hydraulic quick-connect.

At least the control valves **44**, pump or pumps **30**, sensor or sensors **36***b*, and register **34** are in communication with a controller **52** located in the second compartment **26**. As an example, the controller **52** includes software, hardware, or both that is configured to carry out any of the functions described herein. In one further example, the controller **52** includes a programmable logic controller with a touch-screen for user input and display of status data. For example, the screen may simultaneously show multiple fluid levels of the equipment that is being serviced.

When in operation, the integrated fuel cap sensors **50** are mounted on respective fuel tanks of the pieces of equipment that are subject to the hot-refueling operation. The hoses **40** are connected to the respective integrated fuel cap sensors **50**. Each integrated fuel cap sensor **50** generates signals that are indicative of the fuel level in the fuel tank of the piece of equipment on which the integrated fuel cap sensor **50** is mounted. The signals are communicated to the controller **52**.

The controller **52** interprets the signals and determines the fuel level for each fuel tank of each piece of equipment. In response to a fuel level that falls below a lower threshold, the controller **52** opens the control valve **44** associated with the hose **40** to that fuel tank and activates the pump or pumps **30**. The pump or pumps **30** provide fuel flow into the manifolds **38** and through the open control valve **44** and reel **42** such that fuel is provided through the respective hose **40** and integrated fuel cap sensor **50** into the fuel tank. The lower threshold may correspond to an empty fuel level of the fuel tank, but more typically the lower threshold will be a level above the empty level to reduce the potential that the equipment completely runs out of fuel and shuts down. The controller **52** can also be programmed with a failsafe measure related to the operation of the fuel cap sensors **50**. As an example, once a control valve **44** is open, if the controller **52** does not detect a change in fuel level from the fuel cap sensor **50** associated with the control valve **44** within a preset time period, the controller **52** shuts the pump **30** off and closes the control valve **44**. Thus, if a hose **40** were to rupture, spillage of fuel is limited to the volume of fuel in the hose **40**. For instance, the preset time period may be three seconds, six seconds, ten seconds, or fifteen seconds, which may limit spillage to approximately fifteen gallons for a given size of hose.

The controller **52** also determines when the fuel level in the fuel tank reaches an upper threshold. The upper threshold may correspond to a full fuel level of the fuel tank, but more typically the upper threshold will be a level below the full level to reduce the potential for overflow. In response to reaching the upper threshold, the controller **52** closes the respective control valve **44** and ceases the pump or pumps **30**. If other control valves **44** are open or are to be opened, the pump or pumps **30** may remain on. The controller **52** can also be programmed with an electronic stop failsafe measure to prevent over-filling. As an example, once an upper threshold is reached on a first tank and the control valve **44** is closed, but the pump **30** is otherwise to remain on to fill other tanks, if the fuel level continues to rise in the first tank, the controller **52** shuts the pump **30** off.

Multiple control valves **44** may be open at one time, to provide fuel to multiple fuel tanks at one time. Alternatively, if there is demand for fuel from two or more fuel tanks, the controller **52** may sequentially open the control valves **44** such that the tanks are refueled sequentially. For instance, upon completion of refueling of one fuel tank, the controller **52** closes the control valve **44** of the hose **40** associated with that tank and then opens the next control valve **44** to begin refueling the next fuel tank. Sequential refueling may facilitate maintaining internal pressure in the manifold and fuel line **32** above a desired or preset pressure threshold to more rapidly deliver fuel. Similarly, the controller **52** may limit the number of control valves **44** that are open at any one instance in order to maintain the internal pressure in the manifold and fuel line **32** above a desired or preset threshold. The controller **52** may perform the functions above while in an automated operating mode. Additionally, the controller **52** may have a manual mode in which a user can control at least some functions through the PLC, such as starting and stopped the pump **30** and opening and closing control valves **44**. For example, manual mode may be used at the beginning of a job when initially filling tanks to levels at which the fuel cap sensors **50** can detect fuel and/or during a job if a fuel cap sensor **50** becomes inoperable. Of course, operating in manual mode may deactivate some automated functions, such as filling at the low threshold or stopping at the high threshold.

In addition to the use of the sensor signals to determine fuel level, or even as an alternative to use of the sensor signals, the refueling may be time-based. For instance, the fuel consumption of a given piece of equipment may be known such that the fuel tank reaches the lower threshold at known time intervals. The controller **52** is operable to refuel the fuel tank at the time intervals rather than on the basis of the sensor signals, although sensor signals may also be used to verify fuel level.

The controller **52** also tracks the amount of fuel provided to the fuel tanks. For instance, the register **34** precisely measures the amount of fuel provided from the pump or pumps **30**. As an example, the register **34** is an electronic register and has a resolution of about 0.1 gallons. The register **34** communicates measurement data to the controller **52**. The controller **52** can thus determine the total amount of fuel used to very precise levels. The controller **52** may also be configured to provide outputs of the total amount of fuel consumed. For instance, a user may program the controller **52** to provide outputs at desired intervals, such as by worker shifts or daily, weekly, or monthly periods. The outputs may also be used to generate invoices for the amount of fuel used. As an example, the controller **52** may provide a daily output of fuel use and trigger the generation of an invoice that corresponds to the daily fuel use, thereby enabling almost instantaneous invoicing.

In a further example, the integrated fuel cap sensors **50** are each hard-wired to the controller **52**. The term "hard-wired" or variations thereof refers to a wired connection between two components that serves for electronic communication there between, which here is a sensor and a controller. The

hard-wiring may facilitate providing more reliable signals from the integrated fuel cap sensors **50**. For instance, the many pieces of equipment, vehicles, workers, etc. at a site may communicate using wireless devices. The wireless signals may interfere with each other and, therefore, degrade communication reliability. Hard-wiring the integrated fuel cap sensors **50** to the controller **52** facilitates reduction in interference and thus enhances reliability.

In general, hard-wiring in a hot-refueling environment presents several challenges. For example, a site has many workers walking about and typically is located on rough terrain. Thus, as will be described below, each integrated fuel cap sensor **50** is hard-wired through the associated hose **40** to the controller **52**.

FIG. **5** illustrates a representative portion of one of the hoses **40** and, specifically, the end of the hose **40** that will be located at the fuel tank of the equipment being refueled. In this example, the hose **40** includes a connector **60** at the end for detachably connecting the hose **40** to the integrated fuel cap sensors **50**. The hose **40** is formed of a tube **62** and a sleeve **64** that circumscribes the tube **62**. As an example, the tube **62** may be a flexible elastomeric tube and the sleeve **64** may be a flexible fabric sleeve. The sleeve **64** is generally loosely arranged around the tube **62**, although the sleeve **64** may closely fit on the tube **62** to prevent substantial slipping of the sleeve **64** relative to the tube **62** during use and handling. Optionally, to further prevent slipping and/or to secure the sleeve **64**, bands may be tightened around the hose **40**. As an example, one or more steel or stainless steel bands can be provided at least near the ends of the hose **40**.

A plurality of sensor communication lines **66** (one shown) are routed with or in the respective hoses **40**. For instance, each line **66** may include a wire, a wire bundle, and/or multiple wires or wire bundles. In one further example, the line **66** is a low milliamp intrinsic safety wiring, which serves as a protection feature for reducing the concern for operating electrical equipment in the presence of fuel by limiting the amount of thermal and electrical energy available for ignition. In this example, the line **66** is routed through the hose **40** between (radially) the tube **62** and the sleeve **64**. The sleeve **64** thus serves to secure and protect the line **66**, and the sleeve **64** may limit spill and spewing if there is a hose **40** rupture. In particular, since the line **66** is secured in the hose **40**, the line **66** does not present a tripping concern for workers. Moreover, in rough terrain environments where there are stones, sand, and other objects that could damage the line **66** if it were free, the sleeve **64** shields the line **66** from direct contact with such objects. In further examples, the line **66** may be embedded or partially embedded in the tube **62** or the sleeve **64**.

In this example, the line **66** extends out from the end of the hose **40** and includes a connector **68** that is detachably connectable with a respective one of the integrated fuel cap sensors **50**. For example, FIG. **6** illustrates a representative example of one of the integrated fuel cap sensors **50**. The integrated fuel cap sensor **50** includes a cap portion **50***a* and a level sensor portion **50***b*. The cap portion **50***a* is detachably connectable with a port of a fuel tank. The cap portion **50***a* includes a connector port **50***c*, which is detachably connectable with the connector **60** of the hose **40**. The sensor portion **50***b* includes a sensor **50***d* and a sensor port **50***e* that is detachably connectable with the connector **68** of the line **66**. The fuel cap sensor **50** may also include a vent port that attaches to a drain hose, to drain any overflow into a containment bucket and/or reduce air pressure build-up in a fuel tank. Thus, a user may first mount the cap portion **50***a* on the fuel tank of the equipment, followed by connecting the hose **40** to the port **50***c* and connecting the line **66** to the port **50***e*.

The sensor **50***d* may be any type of sensor that is capable of detecting fluid or fuel level in a tank. In one example, the sensor **50***d* is a guided wave radar sensor. A guided wave radar sensor may include a transmitter/sensor that emits radar waves, most typically radio frequency waves, down a probe. A sheath may be provided around the probe. For example, the sheath may be a metal alloy (e.g., stainless steel or aluminum) or polymer tube that surrounds the probe. One or more bushings may be provided between the probe and the sheth, to separate the probe from the sheath. The sheath shields the probe from contact by external objects, the walls of a fuel tank, or other components in a fuel tank, which might otherwise increase the potential for faulty sensor readings. The probe serves as a guide for the radar waves. The radar waves reflect off of the surface of the fuel and the reflected radar waves are received into the transmitter/sensor. A sensor controller determines the "time of flight" of the radar waves, i.e., how long it takes from emission of the radar waves for the radar waves to reflect back to the transmitter/sensor. Based on the time, the sensor controller, or the controller **52** if the sensor controller does not have the capability, determines the distance that the radar waves travel. A longer distance thus indicates a lower fuel level (farther away) and a shorter distance indicates a higher fuel level (closer).

The line **66** routes through the hose **40** and back to the reel **42** in the trailer **22**. For example, the line **66** is also routed or hard-wired through the reel **42** to the controller **52**. FIG. **7** illustrates a representative example of the routing in the reel **42**. In this example, the reel **42** includes a spindle **42***b* about which the reel is rotatable. The spindle **42***b* may be hollow, and the line **66** may be routed through the spindle **42***b*. The reel **42** may also include a connector **42***c* mounted thereon. The connector **42***c* receives the line **66** and serves as a port for connection with another line **66***a* to the controller **52**.

The lines **66***a* may converge to one or more communication junction blocks or "bricks" prior to the controller **52**. The communication junction blocks may serve to facilitate the relay of the signals back to the controller **52**. The communication junction blocks may alternatively or additionally serve to facilitate identification of the lines **66**, and thus the signals, with respect to which of the hoses a particular line **66** is associated with. For instance, a group of communication junction blocks may have unique identifiers and the lines **66** into a particular communication junction block may be associated with identifiers. A signal relayed into the controller **52** may thus be associated with the identifiers of the communication junction blocks and a particular line **66** of that communication junction block in order to identify which hose **40** the signal is to be associated with. The valves **44** may also communicate with the controller **52** in a similar manner through the communication junction blocks.

As can be appreciated from the examples herein, the station **20** permits continuous hot-refueling with enhanced reliability. While there might generally be a tendency to choose wireless sensor communication for convenience, a hard-wired approach mitigates the potential for signal interference that can arise with wireless. Moreover, by hard-wiring the sensors through the hoses to the controller, wired communication lines are protected from exposure and do not pose additional concerns for workers on a site.

FIG. **8** illustrates a system **69** for remotely monitoring and/or managing at least one mobile distribution station **20** (A). It is to be appreciated that the system **69** may include additional mobile distribution stations, shown in phantom at **20** (B), **20** (C), and **20** (D) (collectively mobile distribution stations **20**), for example. The mobile distribution stations **20** may be located at a single work site or located across several different work sites S**1** and S**2**. Each mobile distribution station **20** is in communication with one or more servers **71** that are remotely located from the mobile distribution stations **20** and work sites S**1**/S**2**. In most implementations, the communication will be wireless.

The server **71** may include hardware, software, or both that is configured to perform the functions described herein. The server **71** may also be in communication with one or more electronic devices **73**. The electronic device **73** is external of or remote from the mobile fuel distribution stations **20**. For example, the electronic device **73** may be, but is not limited to, a computer, such as a desktop or laptop computer, a cellular device, or tablet device. The electronic device **73** may communicate and interact in the system **69** via data connectivity, which may involve internet connectivity, cellular connectivity, software, mobile application, or combinations of these.

The electronic device **73** may include a display **73***a*, such as an electronic screen, that is configured to display the fuel operating parameter data of each of the mobile distribution stations **20**. As an example, the electronic device **73** may display in real-time the operating parameter data of each of the mobile distribution stations **20** in the system **69** to permit remote monitoring and management control of the mobile distribution stations **20**. For instance, the operating parameter data may include fuel temperature, fuel pressure, fuel flow, total amount of fuel distributed, operational settings (e.g., low and high fuel level thresholds), or other parameters.

The server **71** may also be in communication with one or more cloud-based devices **75**. The cloud-based device **75** may include one or more servers and a memory for communicating with and storing information from the server **71**.

The server **71** is configured to communicate with the mobile distribution stations **20**. Most typically, the server **71** will communicate with the controller **52** of the mobile distribution station **20**. In this regard, the controller **52** of each mobile distribution station **20** may be include hardware, software, or both that is configured for external communication with the server **71**. For example, each controller **52** may communicate and interact in the system **69** via data connectivity, which may involve internet connectivity, cellular connectivity, software, mobile application, or combinations of these.

The server **71** is configured to receive operating parameter data from the mobile distribution stations **20**. The operating parameter data may include or represent physical measurements of operating conditions of the mobile distribution station **20**, status information of the mobile distribution station **20**, setting information of the mobile distribution station **20**, or other information associated with control or management of the operation of the mobile distribution station **20**.

For example, the server **71** utilizes the information to monitor and auto-manage the mobile distribution station **20**. The monitoring and auto-management may be for purposes of identifying potential risk conditions that may require shutdown or alert, purposes of intelligently enhancing operation, or purposes of reading fuel or fluid levels in real-time via the sensors **50**. As an example, the server **71** may utilize the information to monitor or display fuel or fluid levels, or determine whether the fuel operating parameter data is within a preset limit and send a control action in response to the operating parameter data being outside the preset limit. As will described in further detail below, the control action may be a shutdown instruction to the mobile fuel distribution stations **20**, an adjustment instruction to the mobile fuel distribution stations **20**, or an alert to the electronic device **73**.

Although a combination of features is shown in the illustrated examples, not all of them need to be combined to realize the benefits of various embodiments of this disclosure. In other words, a system designed according to an embodiment of this disclosure will not necessarily include all of the features shown in any one of the Figures or all of the portions schematically shown in the Figures. Moreover, selected features of one example embodiment may be combined with selected features of other example embodiments.

The preceding description is exemplary rather than limiting in nature. Variations and modifications to the disclosed examples may become apparent to those skilled in the art that do not necessarily depart from this disclosure. The scope of legal protection given to this disclosure can only be determined by studying the following claims.

What is claimed is:

1. A distribution station comprising:

a mobile trailer;

a pump on the mobile trailer;

a manifold on the mobile trailer and connected with the pump;

a plurality of reels on the mobile trailer;

a plurality of flow passages, each said flow passage being connected to the manifold and running through a respective one of the reels;

a plurality of hoses, each said hose being connected with a respective one of the flow passages via a respective one of the reels;

a plurality of valves on the mobile trailer, each said valve situated between the manifold and a respective different one of the reels and being operable to control fluid flow through a respective one of the flow passages;

a plurality of fluid level sensors, each said fluid level sensor being connected or connectable with a respective different one of the hoses; and

a controller configured to operate the valves responsive to fluid level thresholds to control fluid flow to the hoses.

2. The distribution station as recited in claim **1**, wherein the controller is configured to determine fluid levels based on signals from the fluid level sensors and determine whether one or more of the fluid levels are below one or more of the fluid level thresholds.

3. The distribution station as recited in claim **2**, wherein the controller is configured to open the valves for which the fluid levels are below the fluid level thresholds.

4. The distribution station as recited in claim **2**, further comprising a plurality of sensor communication lines, each said sensor communication line being connected or connectable with a respective different one of the fluid level sensors, and each said sensor communication line being routed with a respective different one of the hoses.

5. The distribution station as recited in claim **4**, wherein each of the hoses includes a tube and a sleeve that circumscribes the tube, and each said sensor communication line is routed in the respective different one of the hoses between the tube and the sleeve.

6. The distribution station as recited in claim **5**, wherein each said sensor communication line is routed through a respective different one of the reels.

7. The distribution station as recited in claim **6**, further comprising a plurality of connectors, each of the connectors being mounted on a respective different one of the reels and each of the connectors receiving a respective different one of the sensor communication lines.

8. The distribution station as recited in claim **7**, wherein each of the reels includes a respective spindle, and each of the sensor communication lines is routed through a respective different one of the spindles.

9. The distribution station as recited in claim **8**, wherein controller is operable to open and close the plurality of valves responsive to a fuel level threshold.

10. A distribution station comprising:

a mobile trailer;

a pump on the mobile trailer;

a manifold on the mobile trailer and connected with the pump;

a plurality of reels on the mobile trailer;

a plurality of hoses, each said hose being connected with the manifold and each said hose including a tube and a sleeve that circumscribes the tube;

a plurality of valves on the mobile trailer, each said valve situated between the manifold and a respective different one of the hoses and being operable to control fluid flow from the manifold to the respective different one of the hoses;

a plurality of fluid level sensors, each said fluid level sensor being connected or connectable with a respective different one of the hoses; and

a controller configured to operate the valves responsive to fluid level thresholds to control fluid flow to the hoses.

11. The distribution station as recited in claim **10**, wherein the sleeve is a fabric sleeve.

12. The distribution station as recited in claim **10**, further comprising bands around the hoses, the bands securing the sleeve on the tube.

13. The distribution station as recited in claim **12**, wherein the bands are steel.

14. The distribution station as recited in claim **10**, further comprising a communication line between the sleeve and the tube.

15. A distribution station comprising:

a mobile trailer including a pump, a manifold connected with the pump, reels, flow passages connected to the manifold and running through the reels, hoses connected with the flow passages via the reels and each of the hoses including a tube and a sleeve that circumscribes the tube, valves situated between the manifold and the reels and operable to control fluid flow through the flow passages, fluid level sensors connected or connectable with the hoses, and a controller configured to operate the valves responsive fluid level thresholds to control fluid flow to the hoses.

16. The distribution station as recited in claim **15**, wherein the controller is configured to determine fluid levels based on signals from the fluid level sensors, determine whether one or more of the fluid levels are below one or more of the fluid level thresholds, and open the valves for which the fluid levels are below the fluid level thresholds.

17. The distribution station as recited in claim **16**, further comprising a plurality of sensor communication lines, each said sensor communication line being connected or connectable with a respective different one of the fluid level sensors.

18. The distribution station as recited in claim **17**, wherein each said sensor communication line is routed in the respective different one of the hoses between the tube and the sleeve.

* * * * *

US010974955B2

(12) **United States Patent**
Shock

(10) **Patent No.: US 10,974,955 B2**
(45) **Date of Patent: *Apr. 13, 2021**

(54) **MOBILE DISTRIBUTION STATION FOR FLUID DISPENSING**

(71) Applicant: **Fuel Automation Station, LLC**, Birmingham, MI (US)

(72) Inventor: **Ricky Dean Shock**, Victoria, TX (US)

(73) Assignee: **FUEL AUTOMATION STATION, LLC**, Birmingham, MI (US)

(*) Notice: Subject to any disclaimer, the term of this patent is extended or adjusted under 35 U.S.C. 154(b) by 0 days.

This patent is subject to a terminal disclaimer.

(21) Appl. No.: **16/700,095**

(22) Filed: **Dec. 2, 2019**

(65) **Prior Publication Data**

US 2020/0102208 A1 Apr. 2, 2020

Related U.S. Application Data

(63) Continuation of application No. 15/890,584, filed on Feb. 7, 2018, now Pat. No. 10,494,251, which is a (Continued)

(51) **Int. Cl.**
B67D 7/04 (2010.01)
B67D 7/84 (2010.01)
(Continued)

(52) **U.S. Cl.**
CPC ***B67D 7/845*** (2013.01); ***B60P 3/035*** (2013.01); ***B62D 63/08*** (2013.01); ***B67D 7/04*** (2013.01);
(Continued)

(58) **Field of Classification Search**
CPC . B67D 7/845; B67D 7/04; B67D 7/40; B67D 7/78; B67D 7/62; B67D 7/348;
(Continued)

(56) **References Cited**

U.S. PATENT DOCUMENTS

2,340,070 A 1/1944 McCauley et al.
2,516,150 A 7/1950 Samiran
(Continued)

FOREIGN PATENT DOCUMENTS

DE 1147397 4/1963
DE 20106400 10/2001
(Continued)

OTHER PUBLICATIONS

Oilfield Business: Technologies. Frac Shack Inc. introduces world's first Bi-Fuel Distribution Unit for hydraulic fracturing industry. Texas Oil & Gas: The National Magazine for Oil & Gas in Texas. vol. 4, Issue 2. 2015. p. 27.
(Continued)

Primary Examiner — Nicolas A Arnett
(74) *Attorney, Agent, or Firm* — Carlson, Gaskey & Olds, P.C.

(57) **ABSTRACT**

A distribution station includes a container, a pump, first and second manifolds fluidly connected with the pump, reels, hoses, valves, fluid level sensors, and a controller. Each hose is connected with a different one of the reels. A portion of the reels are connected to be fed from the first manifold and another portion of the reels are connected to be fed from the second manifold. Each valve is situated between one of the first or second manifolds and a respective different one of the reels. Each fluid level sensor is associated with a different one of the hoses. The controller is configured to individually open and close the valves responsive to the fluid level sensors.

20 Claims, 5 Drawing Sheets

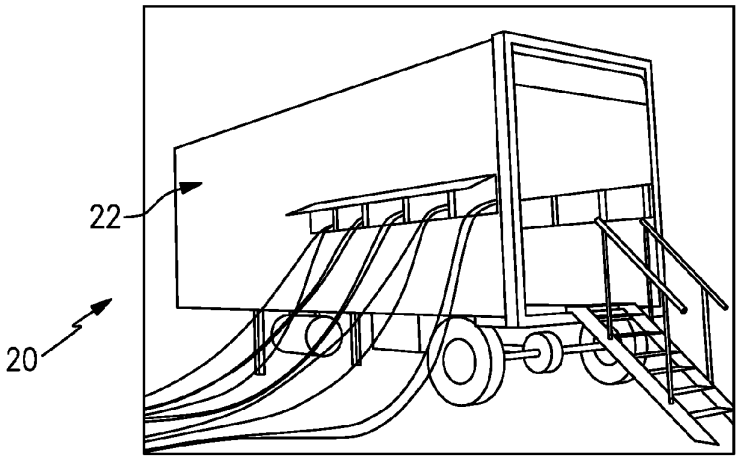

Related U.S. Application Data

continuation of application No. 15/416,198, filed on Jan. 26, 2017, now Pat. No. 9,932,220, which is a continuation of application No. 15/290,371, filed on Oct. 11, 2016, now Pat. No. 9,586,805.

(51) **Int. Cl.**

B67D 7/40	(2010.01)
B60P 3/035	(2006.01)
B67D 7/62	(2010.01)
B67D 7/78	(2010.01)
B62D 63/08	(2006.01)
E21B 43/26	(2006.01)
B67D 7/34	(2010.01)
B67D 7/14	(2010.01)

(52) **U.S. Cl.**
CPC ***B67D 7/40*** (2013.01); ***B67D 7/62*** (2013.01); ***B67D 7/78*** (2013.01); *B67D 7/145* (2013.01); *B67D 7/348* (2013.01); *E21B 43/26* (2013.01)

(58) **Field of Classification Search**
CPC B67D 7/145; B62D 63/08; B60P 3/035; E21B 43/26
See application file for complete search history.

(56) **References Cited**

U.S. PATENT DOCUMENTS

2,769,572	A	11/1956	Harman et al.
2,777,461	A	1/1957	Wildhaber
2,966,921	A	1/1961	Whiteman
3,028,010	A	4/1962	Headrick
3,136,295	A	6/1964	Gramo
3,547,141	A	12/1970	Alexander
3,605,798	A	9/1971	Green et al.
3,618,643	A	11/1971	Thomson
3,625,399	A	12/1971	Heisler
3,677,284	A	7/1972	Mendez
3,881,509	A	5/1975	Newton
4,139,019	A	2/1979	Bresie et al.
4,284,210	A	8/1981	Horak
4,511,311	A	4/1985	Olson
4,591,115	A	5/1986	DeCarlo
4,651,788	A	3/1987	Grosskreuz et al.
4,728,005	A	3/1988	Jacobs et al.
4,930,665	A	6/1990	Devine
5,406,988	A	4/1995	Hopkins
5,454,408	A	10/1995	DiBella et al.
5,465,766	A	11/1995	Siegele et al.
5,503,199	A	4/1996	Whitley, II et al.
5,538,051	A	7/1996	Brown et al.
5,551,309	A	9/1996	Goossens et al.
5,651,400	A	7/1997	Corts et al.
5,660,358	A	8/1997	Grafwallner et al.
5,708,424	A	1/1998	Orlando et al.
5,749,339	A	5/1998	Graham et al.
5,927,603	A	7/1999	McNabb
5,884,675	A	12/1999	Krasnov
6,098,646	A	8/2000	Hennemann et al.
6,206,056	B1	3/2001	Lagache
6,564,615	B1	5/2003	Carter
6,601,000	B1	7/2003	Barlian et al.
6,651,706	B2	11/2003	Litt
6,697,705	B2	2/2004	Johnson et al.
6,755,225	B1	6/2004	Niedwiecki et al.
6,761,194	B1	7/2004	Blong
6,779,569	B1	8/2004	Teer, Jr. et al.
6,786,245	B1	9/2004	Eichelberger et al.
7,063,276	B2	6/2006	Newton
7,106,026	B2	9/2006	Moore
7,353,808	B2	4/2008	Kakoo
7,415,995	B2	8/2008	Plummer et al.
7,458,543	B2	12/2008	Cutler et al.
7,568,507	B2	8/2009	Farese et al.
7,602,143	B2	12/2009	Capizzo
7,628,182	B2	12/2009	Poulter
7,937,215	B2	5/2011	Humphrey
7,938,151	B2	5/2011	Hockner
8,448,750	B2	5/2013	Gaugush et al.
9,346,662	B2	5/2016	Van Vliet et al.
9,371,830	B2	6/2016	Moffitt, Jr.
9,371,831	B2	6/2016	Moffitt, Jr.
9,586,805	B1	3/2017	Shock
9,815,683	B1 *	11/2017	Kalala B67D 7/3218
9,932,220	B1 *	4/2018	Shock B67D 7/40
9,981,840	B2 *	5/2018	Shock B67D 7/465
10,087,065	B2 *	10/2018	Shock B67D 7/845
10,150,662	B1 *	12/2018	Shock B67D 7/84
10,196,258	B2 *	2/2019	Kalala B67D 7/08
10,494,251	B2 *	12/2019	Shock B67D 7/845
10,633,243	B2 *	4/2020	Shock B65H 75/4402
10,759,649	B2 *	9/2020	Haile B67D 7/04
2001/0017815	A1	8/2001	Ackermann et al.
2005/0109561	A1	5/2005	Chopra
2007/0079891	A1	4/2007	Farese et al.
2007/0164031	A1	7/2007	Holz
2007/0181212	A1	8/2007	Fell
2016/0076533	A1	3/2016	Moffitt, Jr.

FOREIGN PATENT DOCUMENTS

DE	10309307	9/2004
DE	102006025025	12/2006
DE	102006038652	2/2008
EP	0161042	11/1985
EP	0433041	6/2001
GB	2485832	5/2012
RU	28347	3/2003
RU	91135	1/2010
RU	2452668	1/2012
SU	949644	8/1982
WO	0177006	10/2001
WO	03029721	4/2003
WO	03093118	11/2003
WO	2006005686	1/2006
WO	2006116572	11/2006
WO	2007087849	8/2007
WO	2008083830	7/2008
WO	2009026607	3/2009
WO	20090608065	6/2009

OTHER PUBLICATIONS

Frac Shack International. Publications & Endorsements. Retrieved Aug. 23, 2016 from: http://www.fracshack.com.
Frac Shack International. Technology. Retrieved Aug. 23, 2016 from: http://www.fracshack.com.
Frac Shack International. Design Benefits. Retrieved Aug. 23, 2016 from: http://www.fracshack.com.
Frac Shack International. Service. Retrieved Aug. 23, 2016 from: http://www.fracshack.com.
Frac Shack International. Frac Shack Series—Series A. Retrieved Aug. 23, 2016 from: http://www.fracshack.com.
Frac Shack International. Frac Shack Series—Series B. Retrieved Aug. 23, 2016 from: http://www.fracshack.com.
Frac Shack International. Frac Shack Series—Series C. Retrieved Aug. 23, 2016 from: http://www.fracshack.com.
Frac Shack International. Frac Shack Series—Series D. Retrieved Aug. 23, 2016 from: http://www.fracshack.com.
Frac Shack International. Frac Shack Series—Series E. Retrieved Aug. 23, 2016 from: http://www.fracshack.com.
Frac Shack International. Frac Shack Series—Series EG. Retrieved Aug. 23, 2016 from: http://www.fracshack.com.
Mann Tek. Dry Disconnect Couplings. Retrieved Jul. 22, 2016 from: http://www.manntek.com/products/drydisconnectcouplings p. 1-4.
Mann Tek. Dry Aviation Couplings. Retrieved Jul. 22, 2016 from: http://www.manntek.com/products/dryaviationcouplings p. 1-4.

(56) **References Cited**

OTHER PUBLICATIONS

Water, J. (2013). Better Safe than Sorry: Frac Shack a welcome addition to the oil patch. Jan. 2, 2013. Retrieved Aug. 23, 2016 from: http://www.pipelinenewsnorth.ca/better-safe-than-sorry-1.1123066.
Shimazaki, H. (1986). Development of centralized fueling and management system of kerosene heating machine. Nisseki Technical Review, vol. 28(4). Jul. 1986. pp. 184-188.
Technical Document. Surface vehicle standard. SAE International. Sep. 2014. pp. 1-5.

* cited by examiner

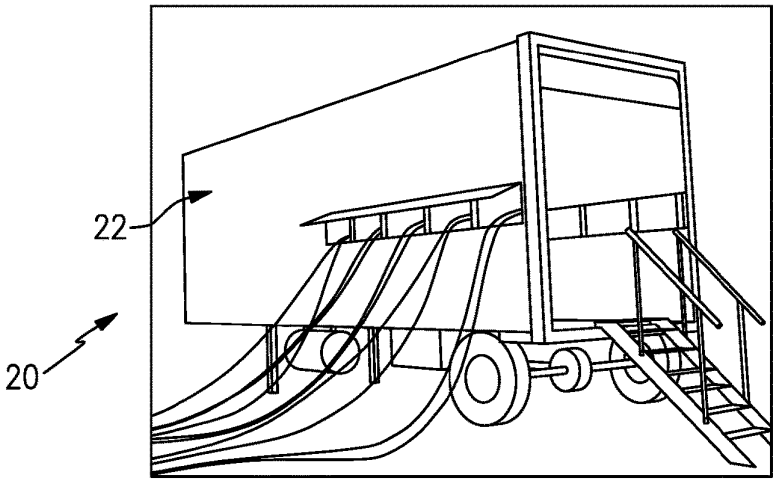
22
20

FIG.1

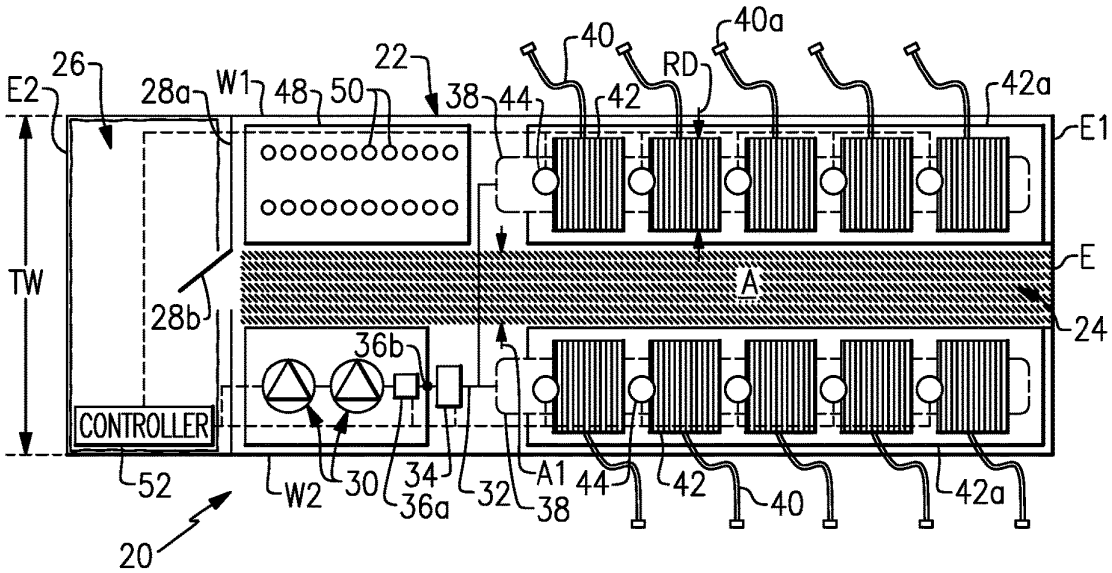
E2
26
28a
W1
48
50
22
38
44
40
42
RD
40a
42a
E1
TW
28b
A
E
24
36b
CONTROLLER
52
W2
30
34
36a
32
A1
38
44
42
40
42a
20

FIG.2

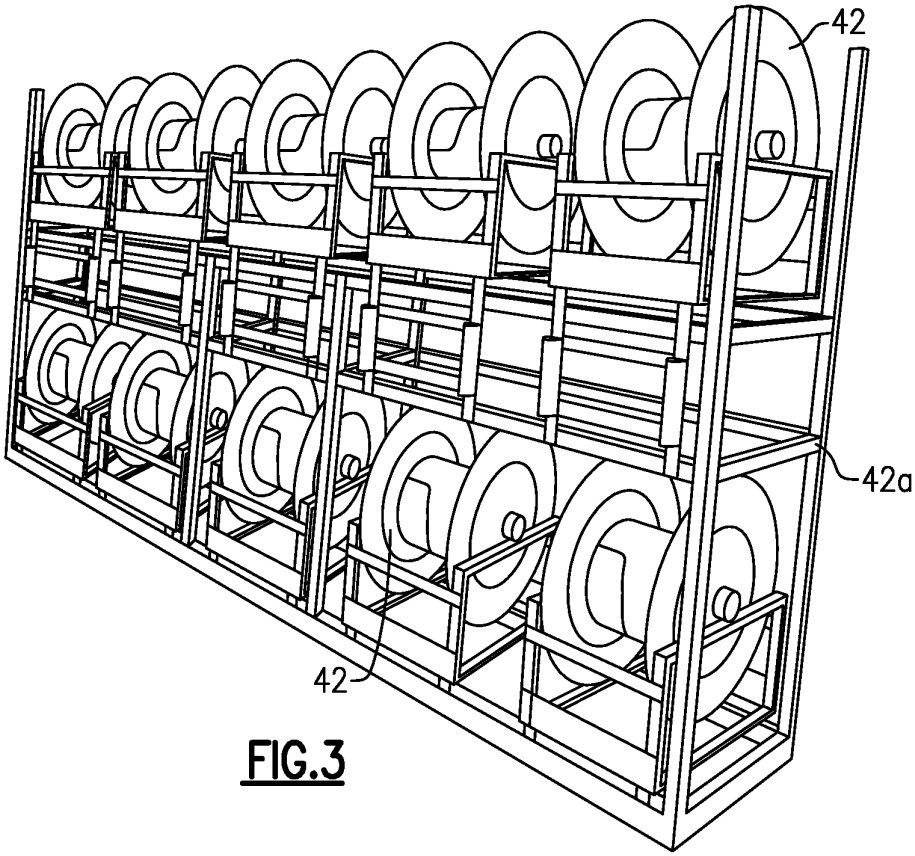

FIG.3

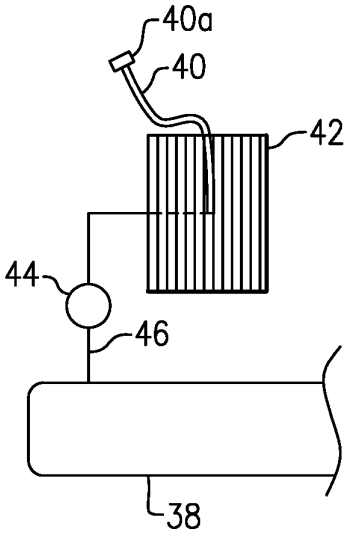

FIG.4

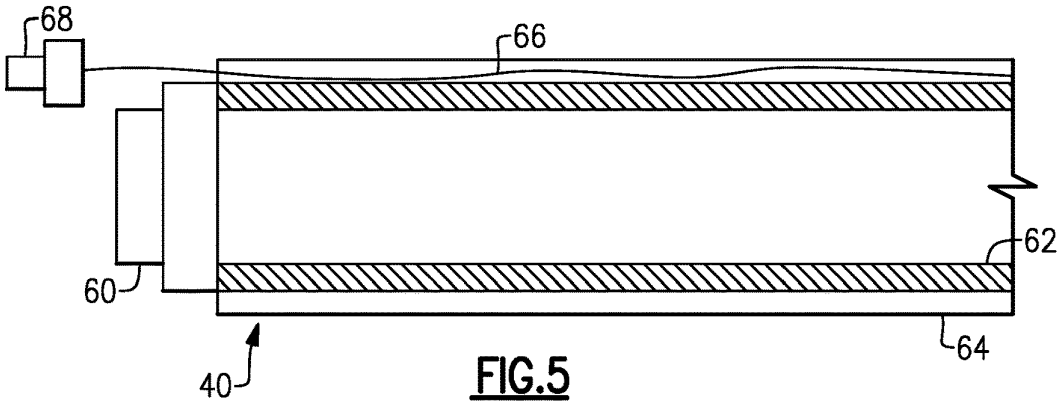

FIG.5

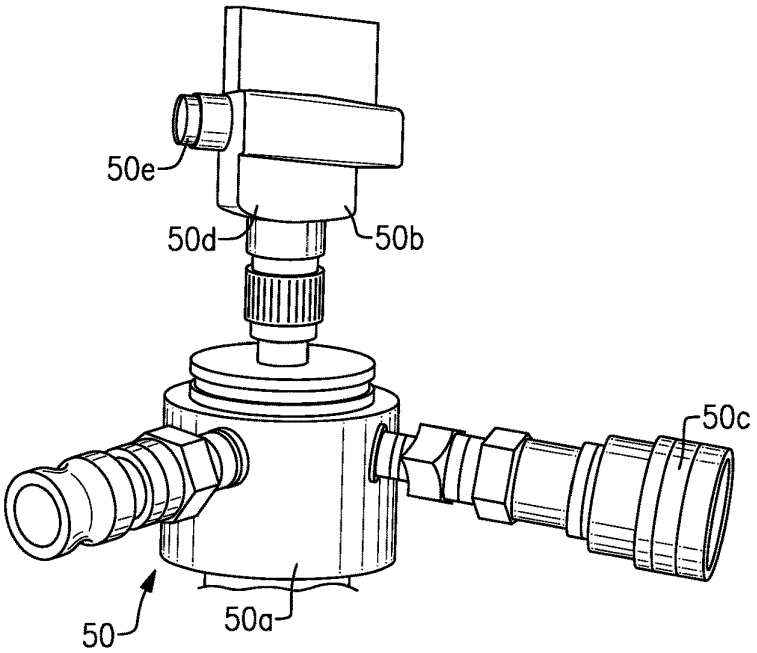

FIG.6

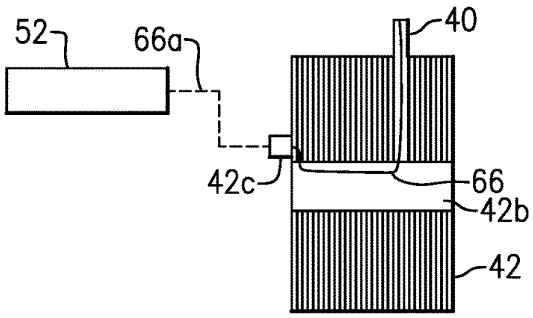

FIG.7

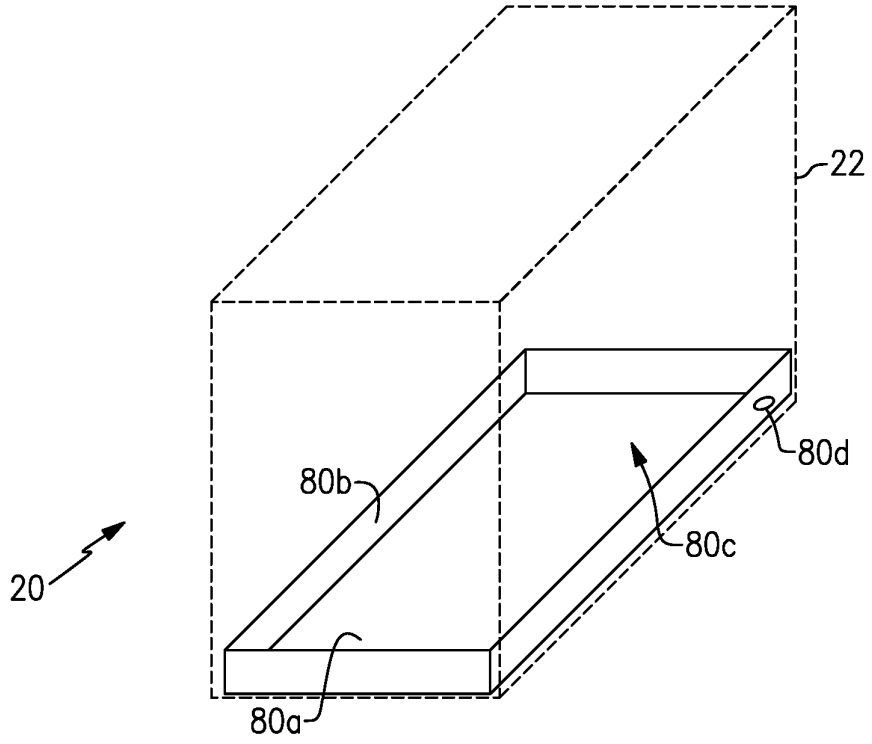

FIG.8

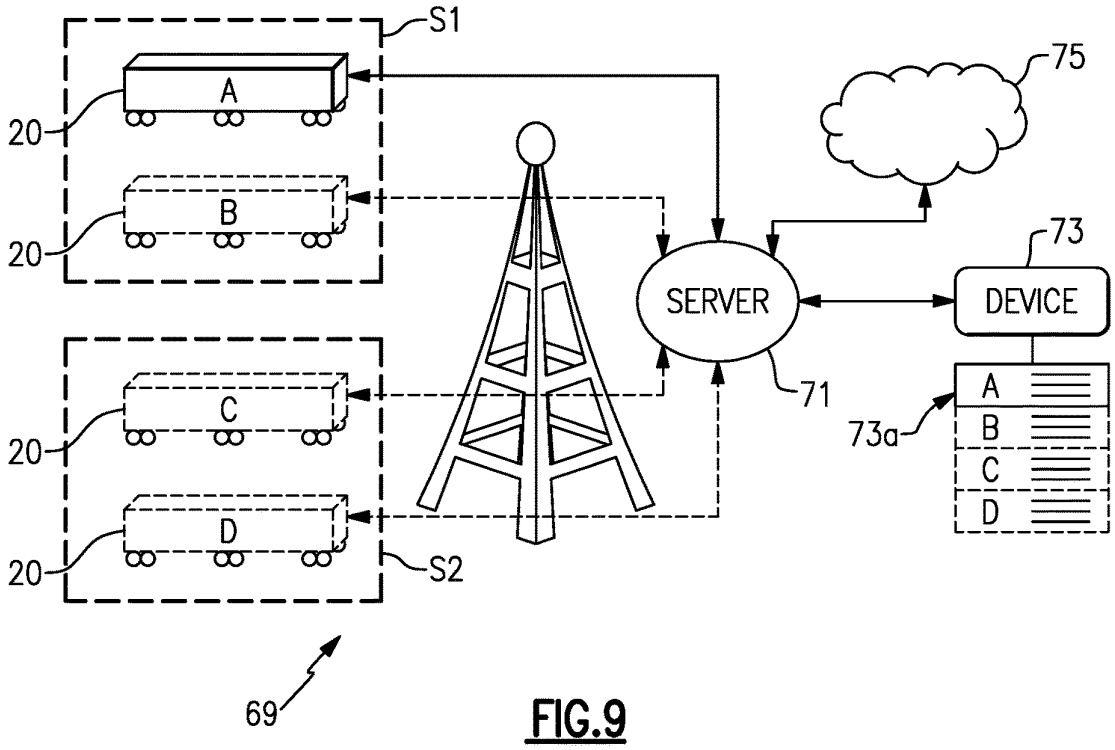

FIG.9

MOBILE DISTRIBUTION STATION FOR FLUID DISPENSING

CROSS-REFERENCE TO RELATED APPLICATION

The present disclosure is a continuation of U.S. patent application Ser. No. 15/890,584, filed Feb. 7, 2018, which is a continuation of U.S. patent application Ser. No. 15/416,198, filed Jan. 26, 2017, now issued as U.S. Pat. No. 9,932,220, which is a continuation of U.S. patent application Ser. No. 15/290,371, filed Oct. 11, 2016, which is now issued as U.S. Pat. No. 9,586,805.

BACKGROUND

Hydraulic fracturing (also known as fracking) is a well-stimulation process that utilizes pressurized liquids to fracture rock formations. Pumps and other equipment used for hydraulic fracturing typically operate at the surface of the well site. The equipment may operate semi-continuously, until refueling is needed, at which time the equipment may be shut-down for refueling. Shut-downs are costly and reduce efficiency. More preferably, to avoid shut-downs fuel is replenished in a hot-refueling operation while the equipment continues to run. This permits fracking operations to proceed fully continuously; however, hot-refueling can be difficult to reliably sustain for the duration of the fracking operation.

SUMMARY

A distribution station according to an example of the present disclosure includes a container that has first and second opposed side walls that join first and second opposed end walls, a pump, first and second manifolds fluidly connected with the pump, reels, hoses, valves, fluid level sensors, and a controller. Each hose is connected with a different one of the reels. A portion of the reels are connected to be fed from the first manifold and another portion of the reels are connected to be fed from the second manifold. Each valve is situated between one of the first or second manifolds and a respective different one of the reels. Each fluid level sensor is associated with a different one of the hoses. The controller is configured to individually open and close the valves responsive to the fluid level sensors.

BRIEF DESCRIPTION OF THE DRAWINGS

The various features and advantages of the present disclosure will become apparent to those skilled in the art from the following detailed description. The drawings that accompany the detailed description can be briefly described as follows.

FIG. **1** illustrates an example mobile distribution station.

FIG. **2** illustrates an internal layout of a mobile distribution station.

FIG. **3** illustrates an isolated view of hose reels on a support rack used in a mobile distribution station.

FIG. **4** illustrates an example of a connection between a manifold, a control valve, and a reel.

FIG. **5** illustrates a sectioned view of an example hose for a mobile distribution station.

FIG. **6** illustrates an example of an integrated fuel cap sensor for a mobile distribution station.

FIG. **7** illustrates an example of the routing of a sensor communication line through a reel in a mobile distribution station.

FIG. **8** illustrates an example of a mobile distribution station with an integrated floor pan.

FIG. **9** illustrates a system that can be used to remotely monitor and manage one or more mobile distribution stations.

DETAILED DESCRIPTION

FIG. **1** illustrates a mobile distribution station **20** and FIG. **2** illustrates an internal layout of the station **20**. As will be described, the station **20** may serve in a "hot-refueling" capacity to distribute fuel to multiple pieces of equipment while the equipment is running, such as fracking equipment at a well site. As will be appreciated, the station **20** is not limited to applications for fracking or for delivering fuel. The examples herein may be presented with respect to fuel delivery, but the station **20** may be used in mobile delivery of other fluids, in other gas/petroleum recovery operations, or in other operations where mobile refueling or fluid delivery will be of benefit.

In this example, the station **20** includes a mobile trailer **22**. Generally, the mobile trailer **22** is elongated and has first and second opposed trailer side walls W**1** and W**2** that join first and second opposed trailer end walls E**1** and E**2**. Most typically, the trailer **22** will also have a closed top (not shown). The trailer side walls W**1**/W**2** define a trailer width, TW. The mobile trailer **22** may have wheels that permit the mobile trailer **22** to be moved by a vehicle from site to site to service different hot-refueling operations.

In this example, the mobile trailer **22** has two compartments. A first compartment **24** includes the physical components for distributing fuel, such as diesel fuel, and a second compartment **26** serves as an isolated control room for managing and monitoring fuel distribution. The compartments **24**/**26** are separated by an inside wall **28***a* that has an inside door **28***b*. The second compartment **26** may be insulated with a fire resistant or retardant material **26***a*. In the event of a fire threat, a worker may take cover in the second compartment **26**. The fire resistant or retardant material **26***a* may shield the second compartment and thus temporarily protect the worker under such circumstances. The second compartment **26** may include an auxiliary escape door to provide external egress from the trailer **22**. Thus, if needed, a worker may exit the trailer **22** other than by the first compartment **24**.

The first compartment **24** includes one or more pumps **30**. Fuel may be provided to the one or more pumps **30** from an external fuel source, such as a tanker truck on the site. On the trailer **22**, the one or more pumps **30** are fluidly connected via a fuel line **32** with a high precision register **34** for metering fuel. The fuel line **32** may include, but is not limited to, hard piping. In this example, the fuel line **32** includes a filtration and air eliminator system **36***a* and one or more sensors **36***b*. Although optional, the system **36***a* is beneficial in many implementations, to remove foreign particles and air from the fuel prior to delivery to the equipment. The one or more sensors **36***b* may include a temperature sensor, a pressure sensor, or a combination thereof, which assist in fuel distribution management.

The fuel line **32** is connected with one or more manifolds **38**. In the illustrated example, the station **20** includes two manifolds **38** that arranged on opposed sides of the compartment **24**. As an example, the manifolds **38** are elongated tubes that are generally larger in diameter than the fuel line

32 and that have at least one inlet and multiple outlets. Each hose **40** is wound, at least initially, on a reel **42** that is rotatable to extend or retract the hose **40** externally through one or more windows of the trailer **22**. Each reel **42** has a reel diameter RD, which is the outside diameter or dimension of the reel **42**. Most typically, all or substantially all of the reels **42** will be the same size and thus have a common reel diameter RD. Each reel **42** may have an associated motor to mechanically extend and retract the hose **40**.

As shown in an isolated view in FIG. **3**, the reels **42** are mounted on a support rack **42***a*. In this example, the support rack **42***a* is configured with upper and lower rows of reels **42**. For instance, a ratio of the number of reels **42** in the upper row to a number of reels in the lower row on the support rack **42***a* is 1:1. As an example, each row has five reels **42** such that each support rack **42***a* provides ten reels **42** and thus ten hoses **40**. There are two support racks **42***a* (FIG. **2**) arranged on opposed sides of the first compartment **24**. The reels **42** are thus likewise arranged on opposed sides of the first compartment **24** in the trailer **22**. The station **20** therefore can provide twenty hoses **40** in the illustrated arrangement, with ten hoses **40** deployable on each side of the station **20**. For instance, the first group of ten hoses **40** on one side of the compartment **24** are deployable from the first trailer side wall W**1** and the second group of ten hoses **40** are deployable from the second trailer side wall W**2**. As will be appreciated, fewer or additional reels and hoses may be used in alternative examples.

An aisle walkway (A) runs down the middle of the trailer **22**. In this example, the aisle walkway A runs between the support racks **42***a* from an outside door E to the inside door **28***b*. Most typically, the aisle walkway A will include the space or volume through which workers walk to operate the station **20**. The aisle walkway A has an aisle width A**1**. As an example, the aisle width A**1** is the largest constant width walkway down the trailer **22** adjacent at least the reels **42** that is not intruded upon by affixed equipment in the trailer **22**, such as the reels **42**, support racks **42***a*, other support structures, etc.

The size of the aisle width A can contribute to reducing the potential for undesired incidents. For instance, there may be two or three or more workers that walk up and down the aisle walkway A in connection with their job duties. The workers need space to potentially pass by each other in the aisle walkway A and carry equipment through the aisle walkway A without bumping into each other or into equipment affixed in the trailer **22**.

The aisle width A**1**, however, is not unlimited and is subject to space availability and other factors relating to the performance of the station **20**. For instance, the reel diameter RD relates to the lengths of hoses that can be stored on the reels **42**. A relatively large reel diameter RD can accommodate a long hose winding, while a relatively smaller reel diameter RD would only accommodate a shorter hose winding. Longer hoses potentially provide greater access to equipment on a site that is located farther from the station, but longer hoses require more space in a station than shorter hoses due to the size of the reel needed to wind the longer hose. There is thus a multi-faceted interplay between the size and number of reels, arrangement of reels, and size/location of an aisle.

In a middle aisle arrangement as with the aisle walkway A, the aisle width A**1** is greater than the reel diameter RD by a factor of at least 1.3. In a further example, the aisle width A**1** is greater than the reel diameter RD by a factor of at least 1.5, and the trailer width TW is no greater than about 96 inches.

Additionally or alternatively, in a further example, a ratio of the trailer width TW to the aisle width A**1** is no greater than 5. In a further example, the ratio of the trailer width TW to the aisle width A**1** is also greater than 2. In a further example, the ratio of the trailer width TW to the aisle width A**1** is also equal to or less than 4. In a further example, the trailer width TW is no greater than about 96 inches and the ratio of the trailer width TW to the aisle width A**1** is greater than 2 and no greater than 5. In a further example of any of the examples herein, the aisle width A**1** is between about 30 inches and about 38 inches. The parameters above provide good station performance in combination with good packaging in the trailer **22** and good aisle size for worker movement.

As shown in a representative example in FIG. **4**, each hose **40** is connected to a respective one of the reels **42** and a respective one of a plurality of control valves **44**. For example, a secondary fuel line **46** leads from the manifold **38** to the reel **42**. The control valve **44** is in the secondary fuel line **46**. The control valve **44** is movable between open and closed positions to selectively permit fuel flow from the manifold **38** to the reel **42** and the hose **40**. For example, the control valve **44** is a powered valve, such as a solenoid valve.

In the illustrated example, the first compartment **24** also includes a sensor support rack **48**. The sensor support rack **48** holds integrated fuel cap sensors **50** (when not in use), or at least portions thereof. When in use, each integrated fuel cap sensor **50** is temporarily affixed to a piece of equipment (i.e., the fuel tank of the equipment) that is subject to the hot-refueling operation. Each hose **40** may include a connector end **40***a* and each integrated fuel cap sensor **50** may have a corresponding mating connector to facilitate rapid connection and disconnection of the hose **40** with the integrated fuel cap sensor **50**. For example, the connector end **40***a* and mating connector on the integrated fuel cap sensor **50** form a hydraulic quick-connect.

At least the control valves **44**, pump or pumps **30**, sensor or sensors **36***b*, and register **34** are in communication with a controller **52** located in the second compartment **26**. As an example, the controller **52** includes software, hardware, or both that is configured to carry out any of the functions described herein. In one further example, the controller **52** includes a programmable logic controller with a touch-screen for user input and display of status data. For example, the screen may simultaneously show multiple fluid levels of the equipment that is being serviced.

When in operation, the integrated fuel cap sensors **50** are mounted on respective fuel tanks of the pieces of equipment that are subject to the hot-refueling operation. The hoses **40** are connected to the respective integrated fuel cap sensors **50**. Each integrated fuel cap sensor **50** generates signals that are indicative of the fuel level in the fuel tank of the piece of equipment on which the integrated fuel cap sensor **50** is mounted. The signals are communicated to the controller **52**.

The controller **52** interprets the signals and determines the fuel level for each fuel tank of each piece of equipment. In response to a fuel level that falls below a lower threshold, the controller **52** opens the control valve **44** associated with the hose **40** to that fuel tank and activates the pump or pumps **30**. The pump or pumps **30** provide fuel flow into the manifolds **38** and through the open control valve **44** and reel **42** such that fuel is provided through the respective hose **40** and integrated fuel cap sensor **50** into the fuel tank. The lower threshold may correspond to an empty fuel level of the fuel tank, but more typically the lower threshold will be a level above the empty level to reduce the potential that the

equipment completely runs out of fuel and shuts down. The controller **52** can also be programmed with a failsafe measure related to the operation of the fuel cap sensors **50**. As an example, once a control valve **44** is open, if the controller **52** does not detect a change in fuel level from the fuel cap sensor **50** associated with the control valve **44** within a preset time period, the controller **52** shuts the pump **30** off and closes the control valve **44**. Thus, if a hose **40** were to rupture, spillage of fuel is limited to the volume of fuel in the hose **40**. For instance, the preset time period may be three seconds, six seconds, ten seconds, or fifteen seconds, which may limit spillage to approximately fifteen gallons for a given size of hose.

The controller **52** also determines when the fuel level in the fuel tank reaches an upper threshold. The upper threshold may correspond to a full fuel level of the fuel tank, but more typically the upper threshold will be a level below the full level to reduce the potential for overflow. In response to reaching the upper threshold, the controller **52** closes the respective control valve **44** and ceases the pump or pumps **30**. If other control valves **44** are open or are to be opened, the pump or pumps **30** may remain on. The controller **52** can also be programmed with an electronic stop failsafe measure to prevent over-filling. As an example, once an upper threshold is reached on a first tank and the control valve **44** is closed, but the pump **30** is otherwise to remain on to fill other tanks, if the fuel level continues to rise in the first tank, the controller **52** shuts the pump **30** off.

Multiple control valves **44** may be open at one time, to provide fuel to multiple fuel tanks at one time. Alternatively, if there is demand for fuel from two or more fuel tanks, the controller **52** may sequentially open the control valves **44** such that the tanks are refueled sequentially. For instance, upon completion of refueling of one fuel tank, the controller **52** closes the control valve **44** of the hose **40** associated with that tank and then opens the next control valve **44** to begin refueling the next fuel tank. Sequential refueling may facilitate maintaining internal pressure in the manifold and fuel line **32** above a desired or preset pressure threshold to more rapidly deliver fuel. Similarly, the controller **52** may limit the number of control valves **44** that are open at any one instance in order to maintain the internal pressure in the manifold and fuel line **32** above a desired or preset threshold. The controller **52** may perform the functions above while in an automated operating mode. Additionally, the controller **52** may have a manual mode in which a user can control at least some functions through the PLC, such as starting and stopped the pump **30** and opening and closing control valves **44**. For example, manual mode may be used at the beginning of a job when initially filling tanks to levels at which the fuel cap sensors **50** can detect fuel and/or during a job if a fuel cap sensor **50** becomes inoperable. Of course, operating in manual mode may deactivate some automated functions, such as filling at the low threshold or stopping at the high threshold.

In addition to the use of the sensor signals to determine fuel level, or even as an alternative to use of the sensor signals, the refueling may be time-based. For instance, the fuel consumption of a given piece of equipment may be known such that the fuel tank reaches the lower threshold at known time intervals. The controller **52** is operable to refuel the fuel tank at the time intervals rather than on the basis of the sensor signals, although sensor signals may also be used to verify fuel level.

The controller **52** also tracks the amount of fuel provided to the fuel tanks. For instance, the register **34** precisely measures the amount of fuel provided from the pump or pumps **30**. As an example, the register **34** is an electronic register and has a resolution of about 0.1 gallons. The register **34** communicates measurement data to the controller **52**. The controller **52** can thus determine the total amount of fuel used to very precise levels. The controller **52** may also be configured to provide outputs of the total amount of fuel consumed. For instance, a user may program the controller **52** to provide outputs at desired intervals, such as by worker shifts or daily, weekly, or monthly periods. The outputs may also be used to generate invoices for the amount of fuel used. As an example, the controller **52** may provide a daily output of fuel use and trigger the generation of an invoice that corresponds to the daily fuel use, thereby enabling almost instantaneous invoicing.

In a further example, the integrated fuel cap sensors **50** are each hard-wired to the controller **52**. The term "hard-wired" or variations thereof refers to a wired connection between two components that serves for electronic communication there between, which here a sensor and a controller. The hard-wiring may facilitate providing more reliable signals from the integrated fuel cap sensors **50**. For instance, the many pieces of equipment, vehicles, workers, etc. at a site may communicate using wireless devices. The wireless signals may interfere with each other and, therefore, degrade communication reliability. Hard-wiring the integrated fuel cap sensors **50** to the controller **52** facilitates reduction in interference and thus enhances reliability.

In general, hard-wiring in a hot-refueling environment presents several challenges. For example, a site has many workers walking about and typically is located on rough terrain. Thus, as will be described below, each integrated fuel cap sensor **50** is hard-wired through the associated hose **40** to the controller **52**.

FIG. **5** illustrates a representative portion of one of the hoses **40** and, specifically, the end of the hose **40** that will be located at the fuel tank of the equipment being refueled. In this example, the hose **40** includes a connector **60** at the end for detachably connecting the hose **40** to the integrated fuel cap sensors **50**. The hose **40** is formed of a tube **62** and a sleeve **64** that circumscribes the tube **62**. As an example, the tube **62** may be a flexible elastomeric tube and the sleeve **64** may be a flexible fabric sleeve. The sleeve **64** is generally loosely arranged around the tube **62**, although the sleeve **64** may closely fit on the tube **62** to prevent substantial slipping of the sleeve **64** relative to the tube **62** during use and handling. Optionally, to further prevent slipping and/or to secure the sleeve **64**, bands may be tightened around the hose **40**. As an example, one or more steel or stainless steel bands can be provided at least near the ends of the hose **40**.

A plurality of sensor communication lines **66** (one shown) are routed with or in the respective hoses **40**. For instance, each line **66** may include a wire, a wire bundle, and/or multiple wires or wire bundles. In one further example, the line **66** is a low milli-amp intrinsic safety wiring, which serves as a protection feature for reducing the concern for operating electrical equipment in the presence of fuel by limiting the amount of thermal and electrical energy available for ignition. In this example, the line **66** is routed through the hose **40** between (radially) the tube **62** and the sleeve **64**. The sleeve **64** thus serves to secure and protect the line **66**, and the sleeve **64** may limit spill and spewing if there is a hose **40** rupture. In particular, since the line **66** is secured in the hose **40**, the line **66** does not present a tripping concern for workers. Moreover, in rough terrain environments where there are stones, sand, and other objects that could damage the line **66** if it were free, the sleeve **64** shields the line **66** from direct contact with such objects. In further

examples, the line **66** may be embedded or partially embedded in the tube **62** or the sleeve **64**.

In this example, the line **66** extends out from the end of the hose **40** and includes a connector **68** that is detachably connectable with a respective one of the integrated fuel cap sensors **50**. For example, FIG. **6** illustrates a representative example of one of the integrated fuel cap sensors **50**. The integrated fuel cap sensor **50** includes a cap portion **50***a* and a fluid level sensor portion **50***b*. The cap portion **50***a* is detachably connectable with a port of a fuel tank. The cap portion **50***a* includes a connector port **50***c*, which is detachably connectable with the connector **60** of the hose **40**. The sensor portion **50***b* includes a sensor **50***d* and a sensor port **50***e* that is detachably connectable with the connector **68** of the line **66**. The fuel cap sensor **50** may also include a vent port that attaches to a drain hose, to drain any overflow into a containment bucket and/or reduce air pressure build-up in a fuel tank. Thus, a user may first mount the cap portion **50***a* on the fuel tank of the equipment, followed by connecting the hose **40** to the port **50***c* and connecting the line **66** to the port **50***e*.

The sensor **50***d* may be any type of sensor that is capable of detecting fluid or fuel level in a tank. In one example, the sensor **50***d* is a guided wave radar sensor. A guided wave radar sensor may include a transmitter/sensor that emits radar waves, most typically radio frequency waves, down a probe. A sheath may be provided around the probe. For example, the sheath may be a metal alloy (e.g., stainless steel or aluminum) or polymer tube that surrounds the probe. One or more bushings may be provided between the probe and the sheath, to separate the probe from the sheath. The sheath shields the probe from contact by external objects, the walls of a fuel tank, or other components in a fuel tank, which might otherwise increase the potential for faulty sensor readings. The probe serves as a guide for the radar waves. The radar waves reflect off of the surface of the fuel and the reflected radar waves are received into the transmitter/sensor. A sensor controller determines the "time of flight" of the radar waves, i.e., how long it takes from emission of the radar waves for the radar waves to reflect back to the transmitter/sensor. Based on the time, the sensor controller, or the controller **52** if the sensor controller does not have the capability, determines the distance that the radar waves travel. A longer distance thus indicates a lower fuel level (farther away) and a shorter distance indicates a higher fuel level (closer).

The line **66** routes through the hose **40** and back to the reel **42** in the trailer **22**. For example, the line **66** is also routed or hard-wired through the reel **42** to the controller **52**. FIG. **7** illustrates a representative example of the routing in the reel **42**. In this example, the reel **42** includes a spindle **42***b* about which the reel is rotatable. The spindle **42***b* may be hollow, and the line **66** may be routed through the spindle **42***b*. The reel **42** may also include a connector **42***c* mounted thereon. The connector **42***c* receives the line **66** and serves as a port for connection with another line **66***a* to the controller **52**.

The lines **66***a* may converge to one or more communication junction blocks or "bricks" prior to the controller **52**. The communication junction blocks may serve to facilitate the relay of the signals back to the controller **52**. The communication junction blocks may alternatively or additionally serve to facilitate identification of the lines **66**, and thus the signals, with respect to which of the hoses a particular line **66** is associated with. For instance, a group of communication junction blocks may have unique identifiers and the lines **66** into a particular communication junction block may be associated with identifiers. A signal relayed into the controller **52** may thus be associated with the identifier of the communication junction blocks and a particular line **66** of that communication junction block in order to identify which hose the signal is to be associated with. The valves **44** may also communicate with the controller **52** in a similar manner through the communication junction blocks.

As illustrated in a further example in FIG. **8**, the station **20** may be further enhanced to reduce the potential for fluid or fuel escape. The trailer **22**, depicted here in phantom, includes a floor pan **80**. The floor pan **80** may be formed of metal, polymer, or combinations thereof and serves to reduce or prevent the escape of fluid or fuel from inside the trailer **22**. In comparison to a temporary, movable catch basin, the floor pan **80** is a permanent fixture in the trailer **22**, and may be structurally affixed in the trailer **22** by fasteners, adhesive, or the like.

As an example, the floor pan **80** includes a bottom **80***a* that joins sides **80***b* to define a container cavity **80***c*. For instance, the floor pan **80** lines the bottom portion of the trailer **22**. The bottom **80***a* and sides **80***b* seal the container cavity **80***c* such that any fluid or fuel that leaks in the trailer **22** is caught and contained in the floor pan **80**, to reduce the potential of spilling or leaking out from the trailer **22**. The floor pan **80** may line only the first compartment **24** or may line both the first and second compartments **24**/**26**. In alternative examples, the floor pan **80** may line only a portion of the trailer **22** where there is potential for leak or spill. Most typically, the floor pan **80** will cover a majority of the floor area of the trailer **22** or at least a majority of the first compartment **24**. In further examples, a ratio of the width of the floor pan **80** to the minimum height of the sides **80***b* is no less than 16 and may be up to about 50. In yet a further example, the cavity **80***c* of the floor pan **80** has a volume of approximately two-hundred gallons and the minimum height of the sides **80***b* is no less than two inches.

Optionally, the floor pan **80** may include one or more drain ports in the bottom **80***a*, sides **80***b*, or both, to permit controlled drainage of spilled fluid or fuel from the floor pan **80** into a catch container.

As can be appreciated from the examples herein, the station **20** permits continuous hot-refueling with enhanced reliability. While there might generally be a tendency to choose wireless sensor communication for convenience, a hard-wired approach mitigates the potential for signal interference that can arise with wireless. Moreover, by hard-wiring the sensors through the hoses to the controller, wired communication lines are protected from exposure and do not pose additional concerns for workers on a site. Additionally, the spatial layout of the station **20** permits enhanced station performance in combination with good packaging and aisle size for worker movement.

FIG. **9** illustrates a system **69** for remotely monitoring and/or managing at least one mobile distribution station **20** (A). It is to be appreciated that the system **69** may include additional mobile distribution stations, shown in phantom at **20** (B), **20** (C), and **20** (D) (collectively mobile distribution stations **20**), for example. The mobile distribution stations **20** may be located at a single work site or located across several different work sites S**1** and S**2**. Each mobile distribution station **20** is in communication with one or more servers **71** that are remotely located from the mobile distribution stations **20** and work sites S**1**/S**2**. In most implementations, the communication will be wireless.

The server **71** may include hardware, software, or both that is configured to perform the functions described herein.

The server **71** may also be in communication with one or more electronic devices **73**. The electronic device **73** is external of or remote from the mobile fuel distribution stations **20**. For example, the electronic device **73** may be, but is not limited to, a computer, such as a desktop or laptop computer, a cellular device, or tablet device. The electronic device **73** may communicate and interact in the system **69** via data connectivity, which may involve internet connectivity, cellular connectivity, software, mobile application, or combinations of these.

The electronic device **73** may include a display **73***a,* such as an electronic screen, that is configured to display the fuel operating parameter data of each of the mobile distribution stations **20**. As an example, the electronic device **73** may display in real-time the operating parameter data of each of the mobile distribution stations **20** in the system **69** to permit remote monitoring and management control of the mobile distribution stations **20**. For instance, the operating parameter data may include fuel temperature, fuel pressure, fuel flow, total amount of fuel distributed, operational settings (e.g., low and high fuel level thresholds), or other parameters.

The server **71** may also be in communication with one or more cloud-based devices **75**. The cloud-based device **75** may include one or more servers and a memory for communicating with and storing information from the server **71**.

The server **71** is configured to communicate with the mobile distribution stations **20**. Most typically, the server **71** will communicate with the controller **52** of the mobile distribution station **20**. In this regard, the controller **52** of each mobile distribution station **20** may be include hardware, software, or both that is configured for external communication with the server **71**. For example, each controller **52** may communicate and interact in the system **69** via data connectivity, which may involve internet connectivity, cellular connectivity, software, mobile application, or combinations of these.

The server **71** is configured to receive operating parameter data from the mobile distribution stations **20**. The operating parameter data may include or represent physical measurements of operating conditions of the mobile distribution station **20**, status information of the mobile distribution station **20**, setting information of the mobile distribution station **20**, or other information associated with control or management of the operation of the mobile distribution station **20**.

For example, the server **71** utilizes the information to monitor and auto-manage the mobile distribution station **20**. The monitoring and auto-management may be for purposes of identifying potential risk conditions that may require shutdown or alert, purposes of intelligently enhancing operation, or purposes of reading fuel or fluid levels in real-time via the sensors **50**. As an example, the server **71** may utilize the information to monitor or display fuel or fluid levels, or determine whether the fuel operating parameter data is within a preset limit and send a control action in response to the operating parameter data being outside the preset limit. As will described in further detail below, the control action may be a shutdown instruction to the mobile fuel distribution stations **20**, an adjustment instruction to the mobile fuel distribution stations **20**, or an alert to the electronic device **73**.

Although a combination of features is shown in the illustrated examples, not all of them need to be combined to realize the benefits of various embodiments of this disclosure. In other words, a system designed according to an embodiment of this disclosure will not necessarily include all of the features shown in any one of the Figures or all of the portions schematically shown in the Figures. Moreover, selected features of one example embodiment may be combined with selected features of other example embodiments.

The preceding description is exemplary rather than limiting in nature. Variations and modifications to the disclosed examples may become apparent to those skilled in the art that do not necessarily depart from this disclosure. The scope of legal protection given to this disclosure can only be determined by studying the following claims.

What is claimed is:

1. A distribution station comprising:

a container including first and second opposed side walls that join first and second opposed end walls;

a pump in the container;

first and second manifolds in the container and fluidly connected with the pump;

a plurality of reels in the container;

a plurality of hoses, each said hose connected with a different one of the reels, wherein a portion of the reels are connected to be fed from the first manifold and another portion of the reels are connected to be fed from the second manifold;

a plurality of valves in the container, each said valve situated between one of the first or second manifolds and a respective different one of the reels;

a plurality of fluid level sensors, each said fluid level sensor being associated with a different one of the hoses; and

a controller configured to individually open and close the valves responsive to the fluid level sensors.

2. The distribution station as recited in claim **1**, wherein the reels are arranged on first and second opposed sides in the container.

3. The distribution station as recited in claim **2**, further comprising an aisle walkway down the middle of the container between the reels on the first and second opposed sides in the container.

4. The distribution station as recited in claim **3**, further comprising a floor pan in the container.

5. The distribution station as recited in claim **1**, wherein the reels on each of the first and second opposed sides are arranged in upper and lower rows of reels.

6. The distribution station as recited in claim **1**, further comprising a register configured to measure an amount of fluid from the pump.

7. The distribution station as recited in claim **6**, wherein the register is in communication with the controller.

8. The distribution station as recited in claim **7**, wherein the controller is configured to track the amount of fluid provided from the pump over a selected time interval.

9. The distribution station as recited in claim **8**, wherein the controller is configured to trigger generation of an invoice for the amount of fluid.

10. The distribution station as recited in claim **8**, wherein the register is an electronic register that has a resolution of about 0.1 gallons.

11. A distribution station comprising:

a container including first and second opposed side walls that join first and second opposed end walls;

at least one pump in the container;

at least one manifold in the container and fluidly connected with the at least one pump;

a plurality of reels in the container, each said reel individually connected with the at least one manifold;

a plurality of hoses, each said hose connected with a different one of the reels;

a plurality of valves in the container, each said valve situated between the at least one manifold and a respective different one of the reels;

a plurality of fluid level sensors, each said fluid level sensor connectable to an end of a different one of the hoses; and

a controller configured to individually open and close the valves responsive to the fluid level sensors.

12. The distribution station as recited in claim **11**, wherein the at least one pump includes two pumps.

13. The distribution station as recited in claim **12**, wherein the two pumps are arranged in fluid series.

14. The distribution station as recited in claim **11**, further comprising a register configured to measure an amount of fluid from the pump.

15. The distribution station as recited in claim **14**, wherein the register is in communication with the controller.

16. The distribution station as recited in claim **15**, wherein the controller is configured to track the amount of fluid provided from the pump over a selected time interval.

17. The distribution station as recited in claim **16**, wherein the controller is configured to trigger generation of an invoice for the amount of fluid.

18. The distribution station as recited in claim **16**, wherein the register is an electronic register that has a resolution of about 0.1 gallons.

19. A distribution station comprising:

a container including first and second opposed side walls that join first and second opposed end walls;

at least one pump in the container;

at least one manifold in the container and fluidly connected with the at least one pump;

a register between the at least one pump and the at least one manifold;

a plurality of reels in the container and connected with the at least one manifold;

a plurality of hoses, each said hose connected with a different one of the reels;

a plurality of valves in the container, each said valve situated between the at least one manifold and a respective different one of the reels;

a plurality of fluid level sensors, each said fluid level sensor being associated with a different one of the hoses; and

a controller configured to individually open and close the valves responsive to the fluid level sensors.

20. The distribution station as recited in claim **19**, wherein the register is configured to generate measurement data representative of an amount of fluid provided from the at least one pump, and the register is in communication with the controller to send the measurement data to the controller.

* * * * *

US009586805B1

(12) **United States Patent**
Shock

(10) **Patent No.: US 9,586,805 B1**
(45) **Date of Patent: Mar. 7, 2017**

(54) **MOBILE DISTRIBUTION STATION WITH AISLE WALKWAY**

(71) Applicant: **Fuel Automation Station, LLC**, Birmingham, MI (US)

(72) Inventor: **Ricky Dean Shock**, Victoria, TX (US)

(73) Assignee: **FUEL AUTOMATION STATION, LLC**, Birmingham, MI (US)

(*) Notice: Subject to any disclaimer, the term of this patent is extended or adjusted under 35 U.S.C. 154(b) by 0 days.

(21) Appl. No.: **15/290,371**

(22) Filed: **Oct. 11, 2016**

(51) **Int. Cl.**

B65B 37/00	(2006.01)
B67D 7/40	(2010.01)
B62D 63/08	(2006.01)
B60P 3/035	(2006.01)
B60P 3/00	(2006.01)
B67D 7/62	(2010.01)
B67D 7/78	(2010.01)
B67D 7/84	(2010.01)
E21B 43/26	(2006.01)

(52) **U.S. Cl.**
CPC ***B67D 7/40*** (2013.01); ***B60P 3/00*** (2013.01); ***B60P 3/035*** (2013.01); ***B62D 63/08*** (2013.01); ***B67D 7/62*** (2013.01); ***B67D 7/78*** (2013.01); ***B67D 7/845*** (2013.01); *E21B 43/26* (2013.01)

(58) **Field of Classification Search**
CPC ... B67D 7/38; B67D 7/84; B67D 7/40; B67D 7/845; B67D 7/465; B67D 7/3218; B67D 7/36; B60P 3/065
See application file for complete search history.

(56) **References Cited**

U.S. PATENT DOCUMENTS

2,516,150	A	7/1950	Samiran
2,769,572	A	11/1956	Harman et al.

(Continued)

FOREIGN PATENT DOCUMENTS

GB	2485832	5/2012
WO	0177006	10/2001

(Continued)

OTHER PUBLICATIONS

Oilfield Business: Technologies. Frac Shack Inc. introduces world's first Bi-Fuel Distribution Unit for hydraulic fracturing industry. Texas Oil & Gas: The National Magazine for Oil & Gas in Texas. vol. 4, Issue 2. 2015. p. 27.

(Continued)

Primary Examiner — Jason K Niesz
(74) *Attorney, Agent, or Firm* — Carlson, Gaskey & Olds, P.C.

(57) **ABSTRACT**

A distribution station includes a mobile trailer, a pump on the mobile trailer, first and second manifolds on the mobile trailer and fluidly connected with the pump, a plurality of hoses, a plurality of reels, a plurality of valves, and a plurality of fluid level sensors. The hoses are connected with the reels. A portion of the reels are connected with the first manifold and another portion of the reels are connected with the second manifold. Each of the valves is situated between one of the first or second manifolds and a respective different one of the hoses. Each of the fluid level sensors is associated with a respective different one of the hoses. The reels are arranged on first and second opposed sides in the mobile trailer, with an aisle walkway down the middle of the mobile trailer.

22 Claims, 19 Drawing Sheets

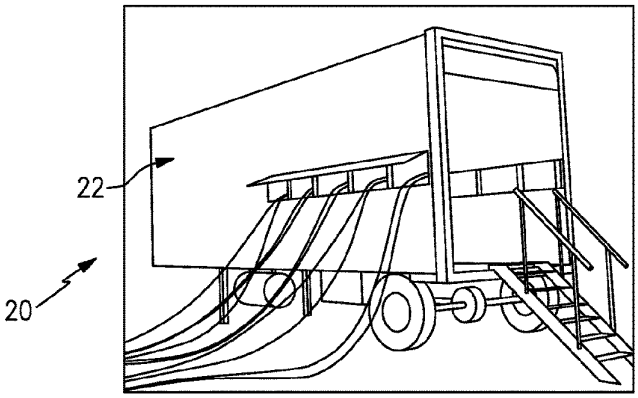

(56) **References Cited**

U.S. PATENT DOCUMENTS

2,777,461	A	1/1957	Wildhaber	
3,028,010	A	4/1962	Headrick	
3,136,295	A	6/1964	Gramo	
3,547,141	A	12/1970	Alexander	
3,618,643	A	11/1971	Thomson	
4,139,019	A	2/1979	Bresie et al.	
4,591,115	A	5/1986	DeCarlo	
4,930,665	A	6/1990	Devine	
5,406,988	A	4/1995	Hopkins	
5,454,408	A	10/1995	DiBella et al.	
5,503,199	A	4/1996	Whitley, II et al.	
5,538,051	A	7/1996	Brown et al.	
5,708,424	A	1/1998	Orlando et al.	
5,884,675	A	3/1999	Krasnov	
6,206,056	B1	3/2001	Lagache	
6,564,615	B1	5/2003	Carter	
6,651,706	B2	11/2003	Litt	
6,697,705	B2	2/2004	Johnson et al.	
6,755,225	B1	6/2004	Niedwiecki et al.	
6,761,194	B1	7/2004	Blong	
6,786,245	B1	9/2004	Eichelberger et al.	
7,063,276	B2	6/2006	Newton	
7,106,026	B2	9/2006	Moore	
7,353,808	B2	4/2008	Kakoo	
7,415,995	B2	8/2008	Plummer et al.	
7,458,543	B2	12/2008	Cutler et al.	
7,568,507	B2	8/2009	Farese et al.	
7,602,143	B2	10/2009	Capizzo	
7,628,182	B2	12/2009	Poulter	
7,938,151	B2	5/2011	Hockner	
9,346,662	B2	5/2016	Van Vliet et al.	
9,371,830	B2	6/2016	Moffitt, Jr.	
9,371,831	B2	6/2016	Moffitt, Jr.	
2007/0079891	A1	4/2007	Farese et al.	
2007/0164031	A1	7/2007	Holz	
2007/0181212	A1	8/2007	Fell	
2011/0197988	A1*	8/2011	Van Vliet	B67D 7/04 141/1
2016/0076533	A1	3/2016	Moffitt, Jr.	

FOREIGN PATENT DOCUMENTS

WO	2006005686	1/2006
WO	2008083830	7/2008
WO	2009026607	3/2009

OTHER PUBLICATIONS

Frac Shack International. Publications & Endorsements. Retrieved Aug. 23, 2016 from: http://www.fracshack.com.

Frac Shack International. Technology. Retrieved Aug. 23, 2016 from: http://www.fracshack.com.

Frac Shack International. Design Benefits. Retrieved Aug. 23, 2016 from: http://www.fracshack.com.

Frac Shack International. Service. Retrieved Aug. 23, 2016 from: http://www.fracshack.com.

Frac Shack International. Frac Shack Series—Series A. Retrieved Aug. 23, 2016 from: http://www.fracshack.com.

Frac Shack International. Frac Shack Series—Series B. Retrieved Aug. 23, 2016 from: http://www.fracshack.com.

Frac Shack International. Frac Shack Series—Series C. Retrieved Aug. 23, 2016 from: http://www.fracshack.com.

Frac Shack International. Frac Shack Series—Series D. Retrieved Aug. 23, 2016 from: http://www.fracshack.com.

Frac Shack International. Frac Shack Series—Series E. Retrieved Aug. 23, 2016 from: http://www.fracshack.com.

Frac Shack International. Frac Shack Series—Series EG. Retrieved Aug. 23, 2016 from: http://www.fracshack.com.

Mann Tek. Dry Disconnect Couplings. Retrieved Jul. 22, 2016 from: http://www.manntek.com/products/drydisconnectcouplings p. 1-4.

Mann Tek. Dry Aviation Couplings. Retrieved Jul. 22, 2016 from: http://www.manntek.com/products/dryaviationcouplings p. 1-4.

Water, J. (2013). Better Safe than Sorry: Frac Shack a welcome addition to the oil patch. Jan. 2, 2011 Retrieved Aug. 23, 2016 from: http://www.pipelinenewsnorth.ca/better-safe-than-sorry-1.1123066.

* cited by examiner

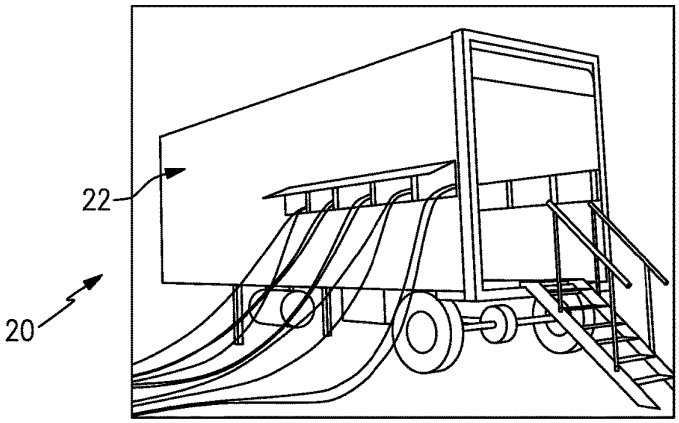
22
20

FIG.1

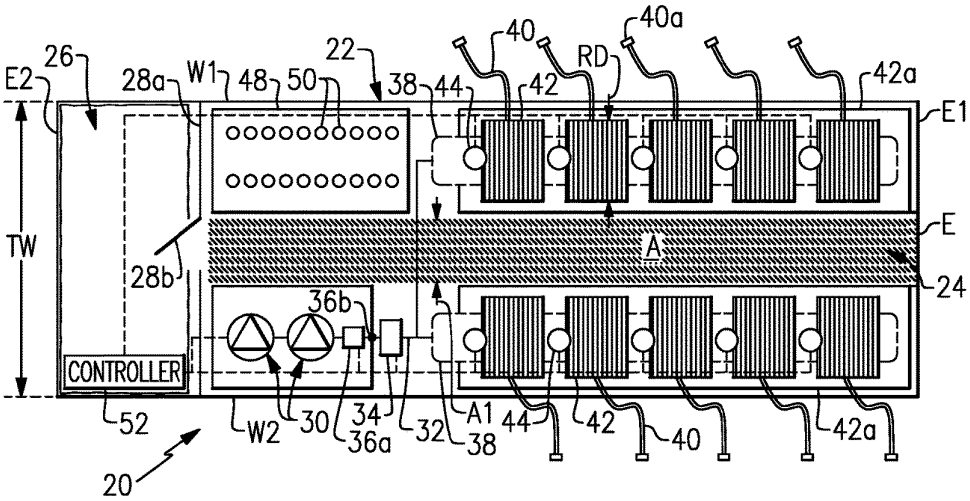
E2
26
28a
W1
48
50
22
38
44
40
42
RD
40a
42a
E1
TW
28b
A
E
24
36b
CONTROLLER
52
W2
30
34
36a
32
A1
38
44
42
40
42a
20

FIG.2

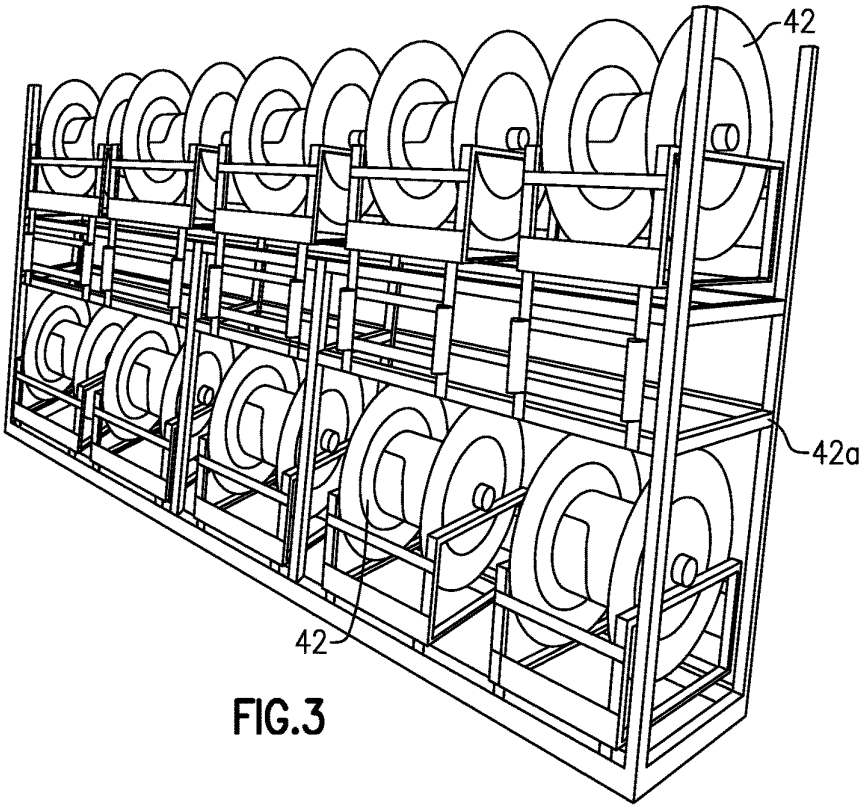

FIG.3

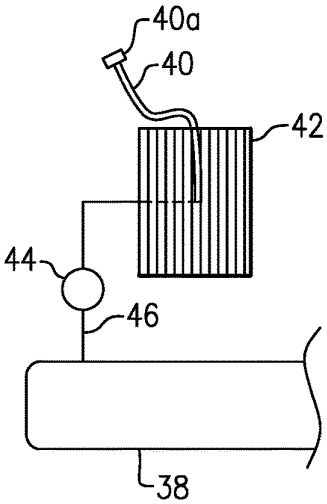

FIG.4

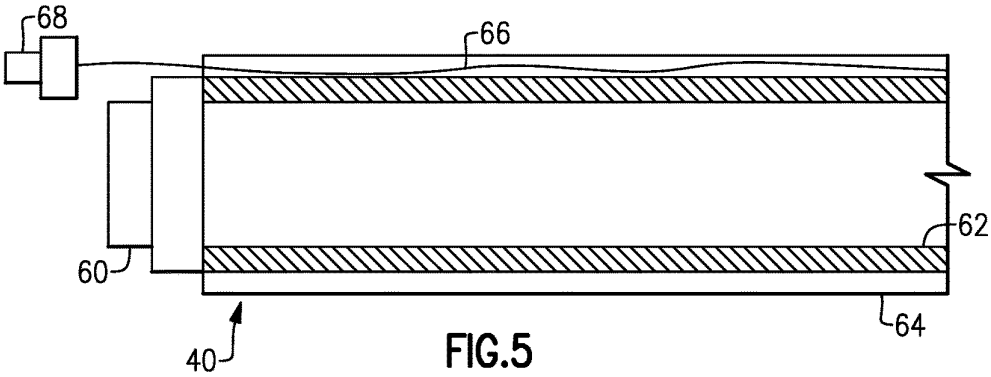

FIG.5

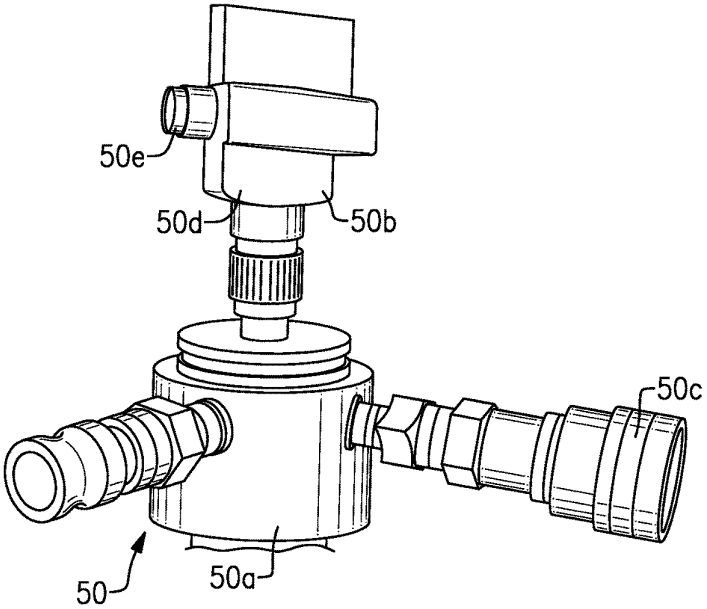

FIG.6

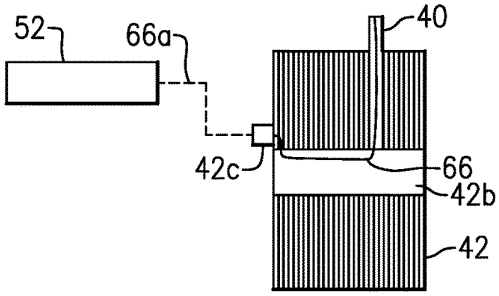

FIG.7

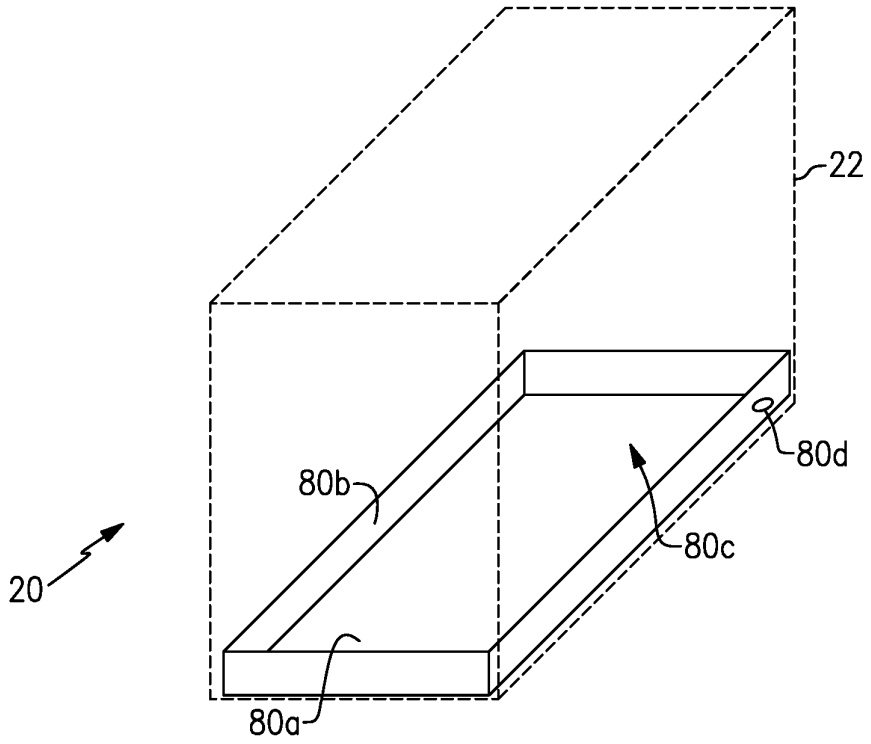

FIG.8

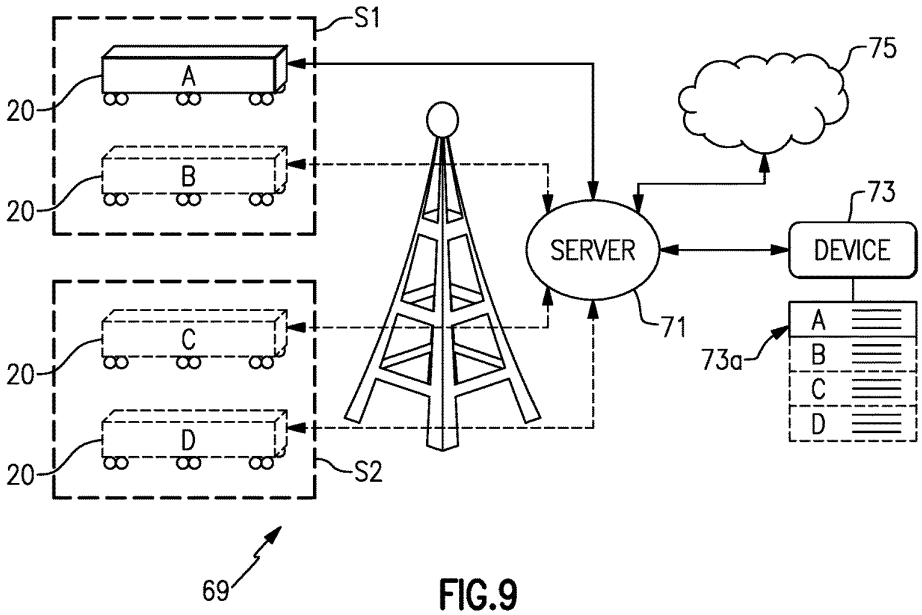

FIG.9

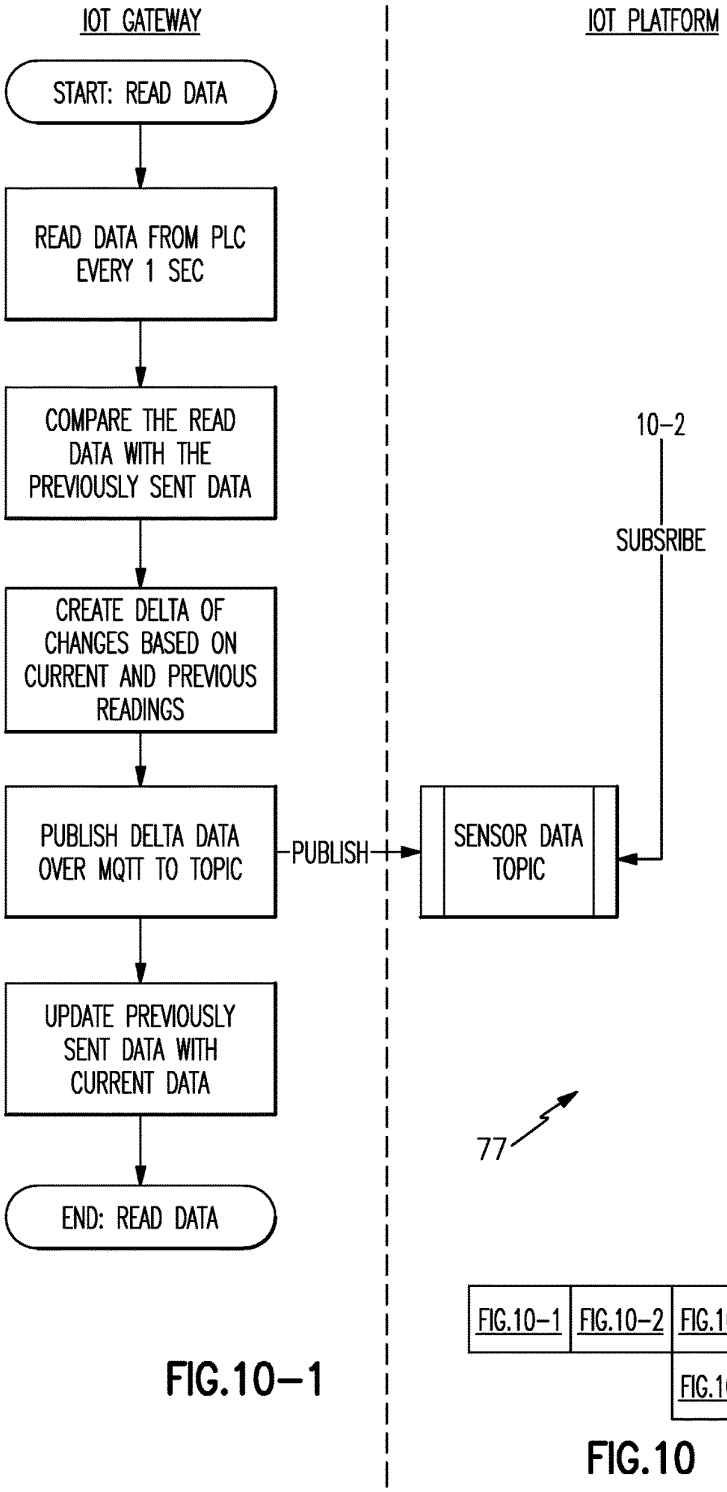

FIG.10-1

FIG.10-1	FIG.10-2	FIG.10-3	FIG.10-4
		FIG.10-6	FIG.10-5

FIG.10

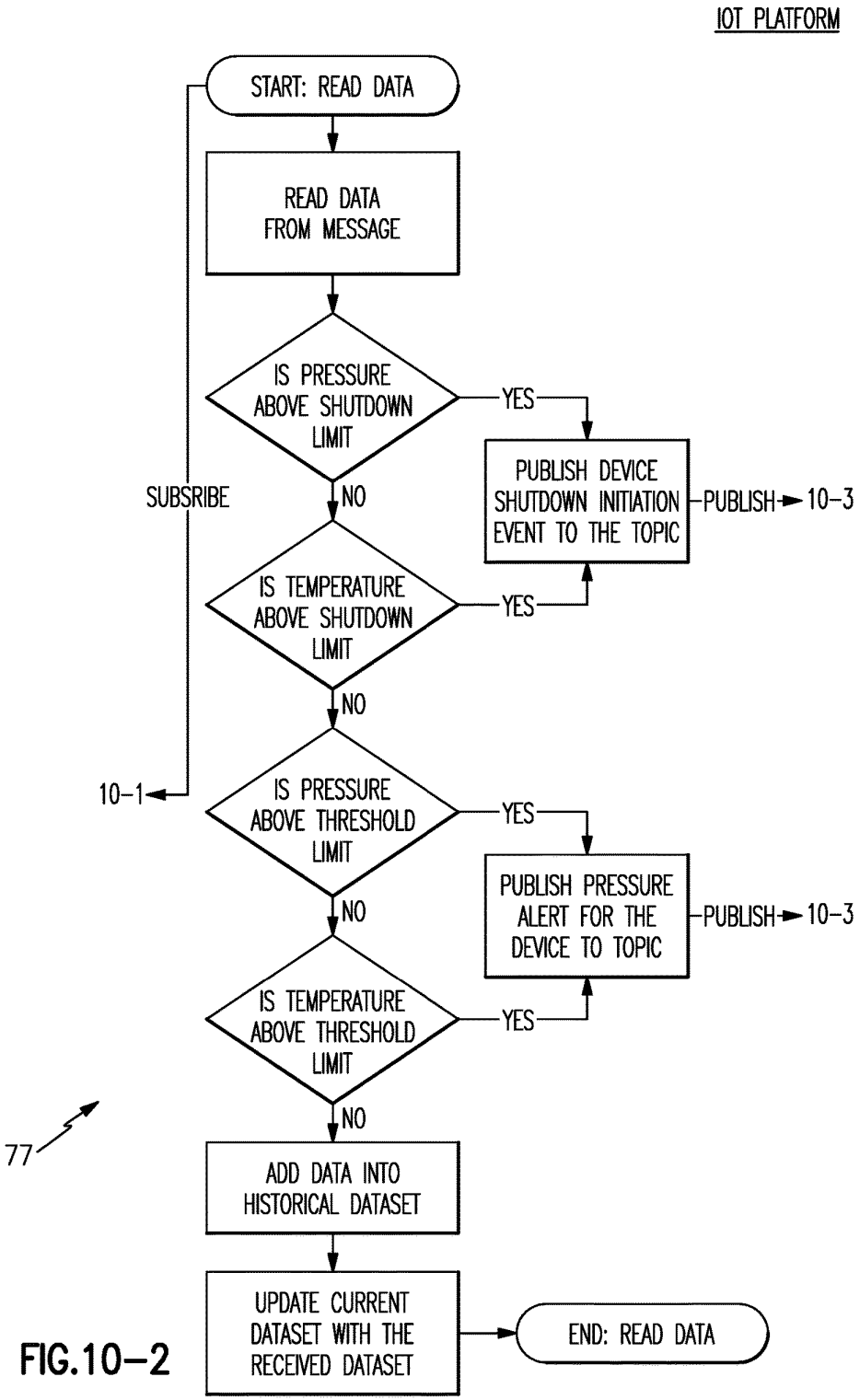
IOT PLATFORM
START: READ DATA
READ DATA FROM MESSAGE
IS PRESSURE ABOVE SHUTDOWN LIMIT
YES
PUBLISH DEVICE SHUTDOWN INITIATION EVENT TO THE TOPIC
PUBLISH
10-3
SUBSRIBE
NO
IS TEMPERATURE ABOVE SHUTDOWN LIMIT
YES
NO
10-1
IS PRESSURE ABOVE THRESHOLD LIMIT
YES
PUBLISH PRESSURE ALERT FOR THE DEVICE TO TOPIC
PUBLISH
10-3
NO
IS TEMPERATURE ABOVE THRESHOLD LIMIT
YES
NO
77
ADD DATA INTO HISTORICAL DATASET
UPDATE CURRENT DATASET WITH THE RECEIVED DATASET
END: READ DATA

FIG.10-2

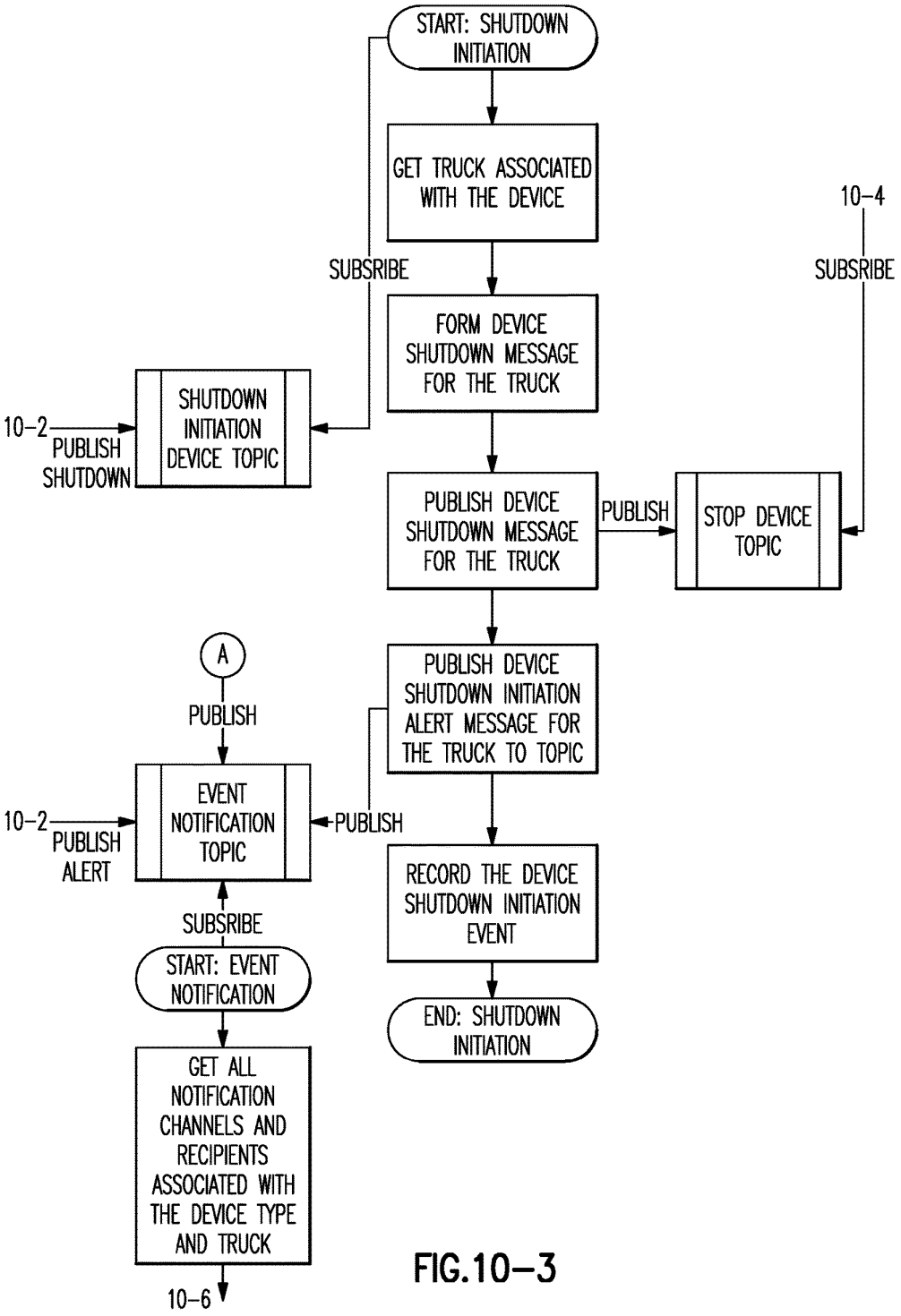
START: SHUTDOWN INITIATION
GET TRUCK ASSOCIATED WITH THE DEVICE
SUBSRIBE
FORM DEVICE SHUTDOWN MESSAGE FOR THE TRUCK
10-2
PUBLISH SHUTDOWN
SHUTDOWN INITIATION DEVICE TOPIC
PUBLISH DEVICE SHUTDOWN MESSAGE FOR THE TRUCK
PUBLISH
STOP DEVICE TOPIC
10-4
SUBSRIBE
A
PUBLISH
PUBLISH DEVICE SHUTDOWN INITIATION ALERT MESSAGE FOR THE TRUCK TO TOPIC
10-2
PUBLISH ALERT
EVENT NOTIFICATION TOPIC
PUBLISH
RECORD THE DEVICE SHUTDOWN INITIATION EVENT
SUBSRIBE
START: EVENT NOTIFICATION
END: SHUTDOWN INITIATION
GET ALL NOTIFICATION CHANNELS AND RECIPIENTS ASSOCIATED WITH THE DEVICE TYPE AND TRUCK
10-6

FIG.10-3

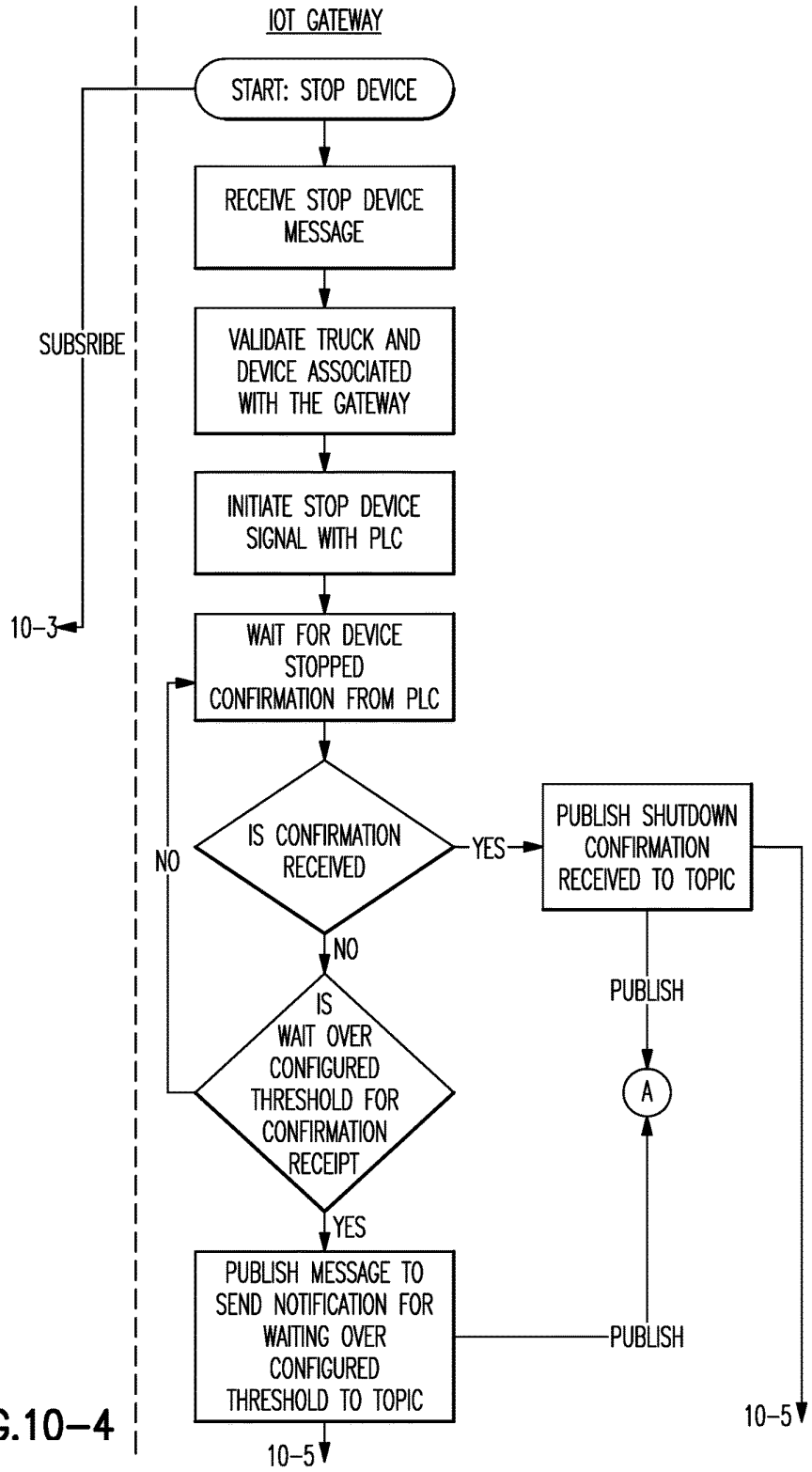
IOT GATEWAY
START: STOP DEVICE
RECEIVE STOP DEVICE MESSAGE
VALIDATE TRUCK AND DEVICE ASSOCIATED WITH THE GATEWAY
INITIATE STOP DEVICE SIGNAL WITH PLC
WAIT FOR DEVICE STOPPED CONFIRMATION FROM PLC
IS CONFIRMATION RECEIVED
YES
NO
PUBLISH SHUTDOWN CONFIRMATION RECEIVED TO TOPIC
PUBLISH
A
IS WAIT OVER CONFIGURED THRESHOLD FOR CONFIRMATION RECEIPT
NO
YES
PUBLISH MESSAGE TO SEND NOTIFICATION FOR WAITING OVER CONFIGURED THRESHOLD TO TOPIC
PUBLISH
SUBSRIBE
10-3
10-5
10-5

FIG.10-4

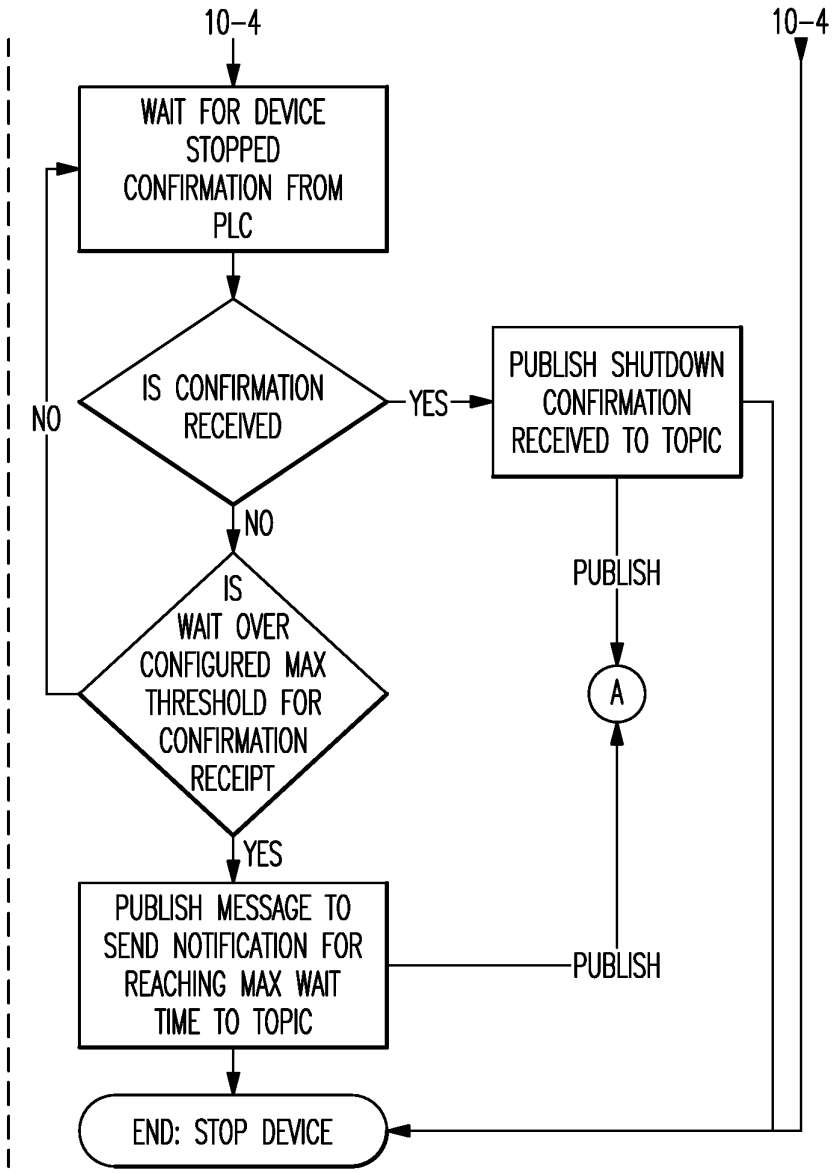
10-4
10-4
WAIT FOR DEVICE STOPPED CONFIRMATION FROM PLC
IS CONFIRMATION RECEIVED
YES
NO
PUBLISH SHUTDOWN CONFIRMATION RECEIVED TO TOPIC
NO
IS WAIT OVER CONFIGURED MAX THRESHOLD FOR CONFIRMATION RECEIPT
PUBLISH
A
YES
PUBLISH MESSAGE TO SEND NOTIFICATION FOR REACHING MAX WAIT TIME TO TOPIC
PUBLISH
END: STOP DEVICE

FIG.10-5

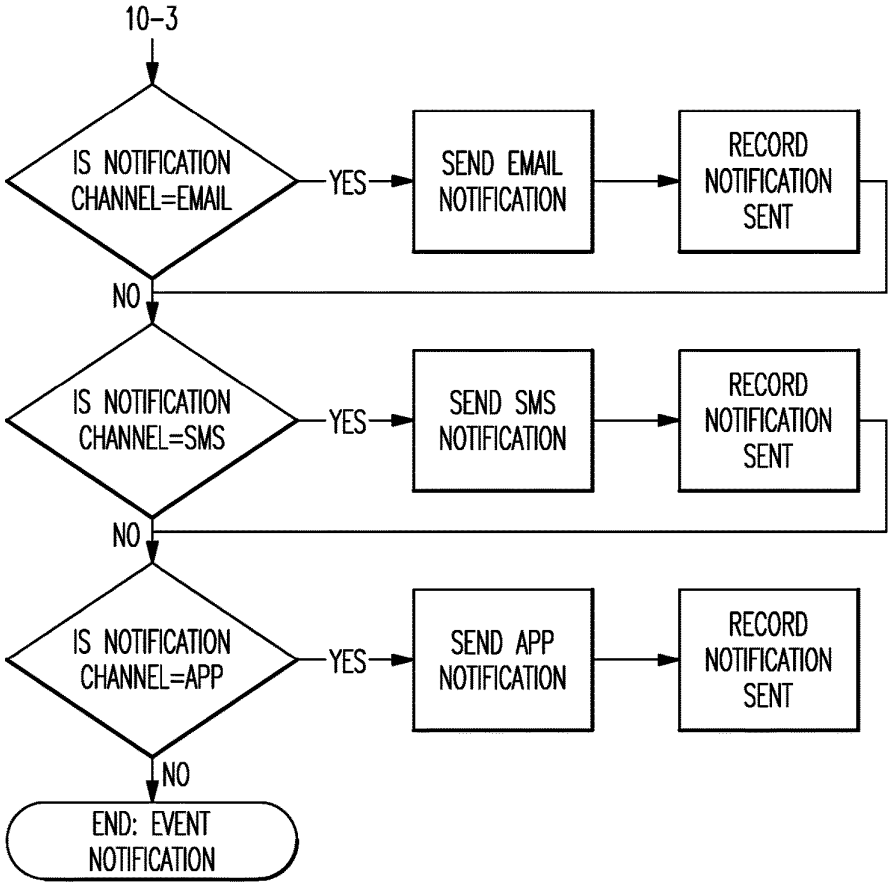
10-3
IS NOTIFICATION CHANNEL=EMAIL
YES
SEND EMAIL NOTIFICATION
RECORD NOTIFICATION SENT
NO
IS NOTIFICATION CHANNEL=SMS
YES
SEND SMS NOTIFICATION
RECORD NOTIFICATION SENT
NO
IS NOTIFICATION CHANNEL=APP
YES
SEND APP NOTIFICATION
RECORD NOTIFICATION SENT
NO
END: EVENT NOTIFICATION

FIG.10-6

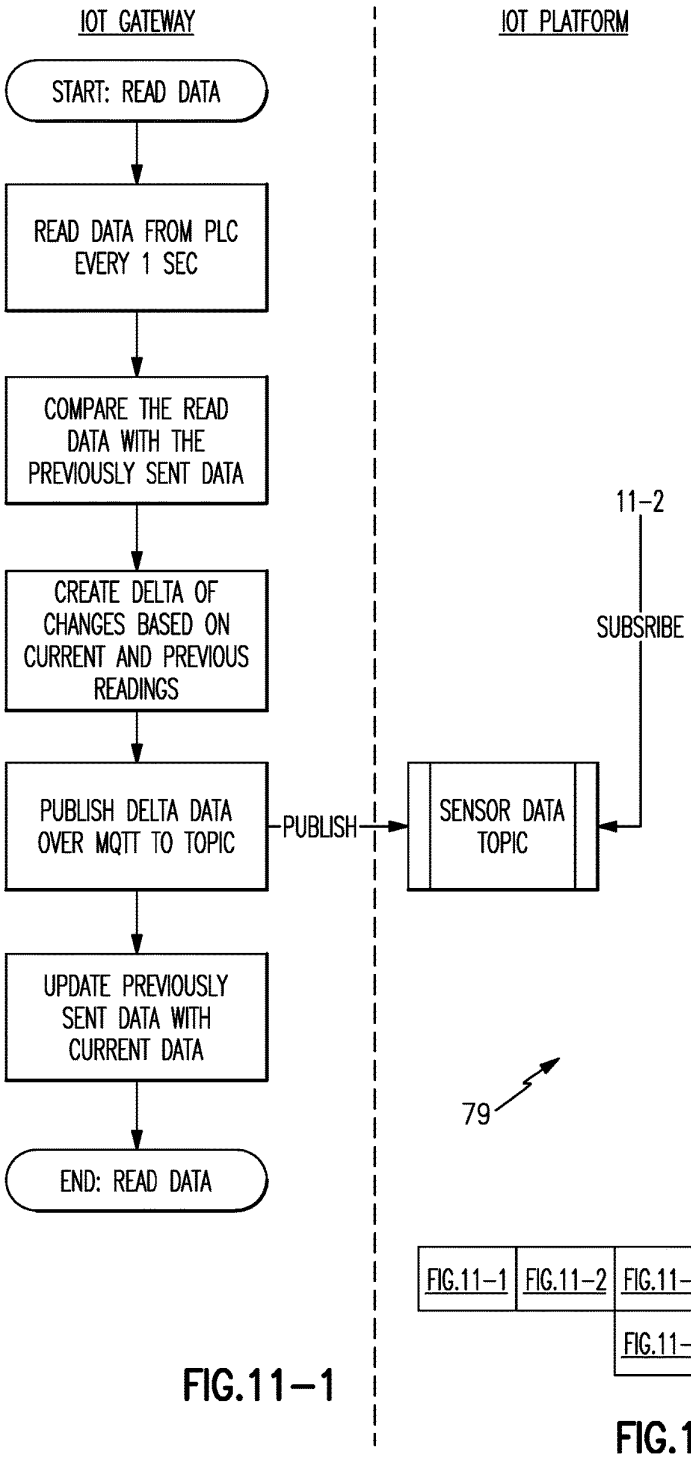

FIG.11-1

FIG.11-1	FIG.11-2	FIG.11-3	FIG.11-4	FIG.11-5
		FIG.11-6	FIG.11-7	FIG.11-8

FIG.11

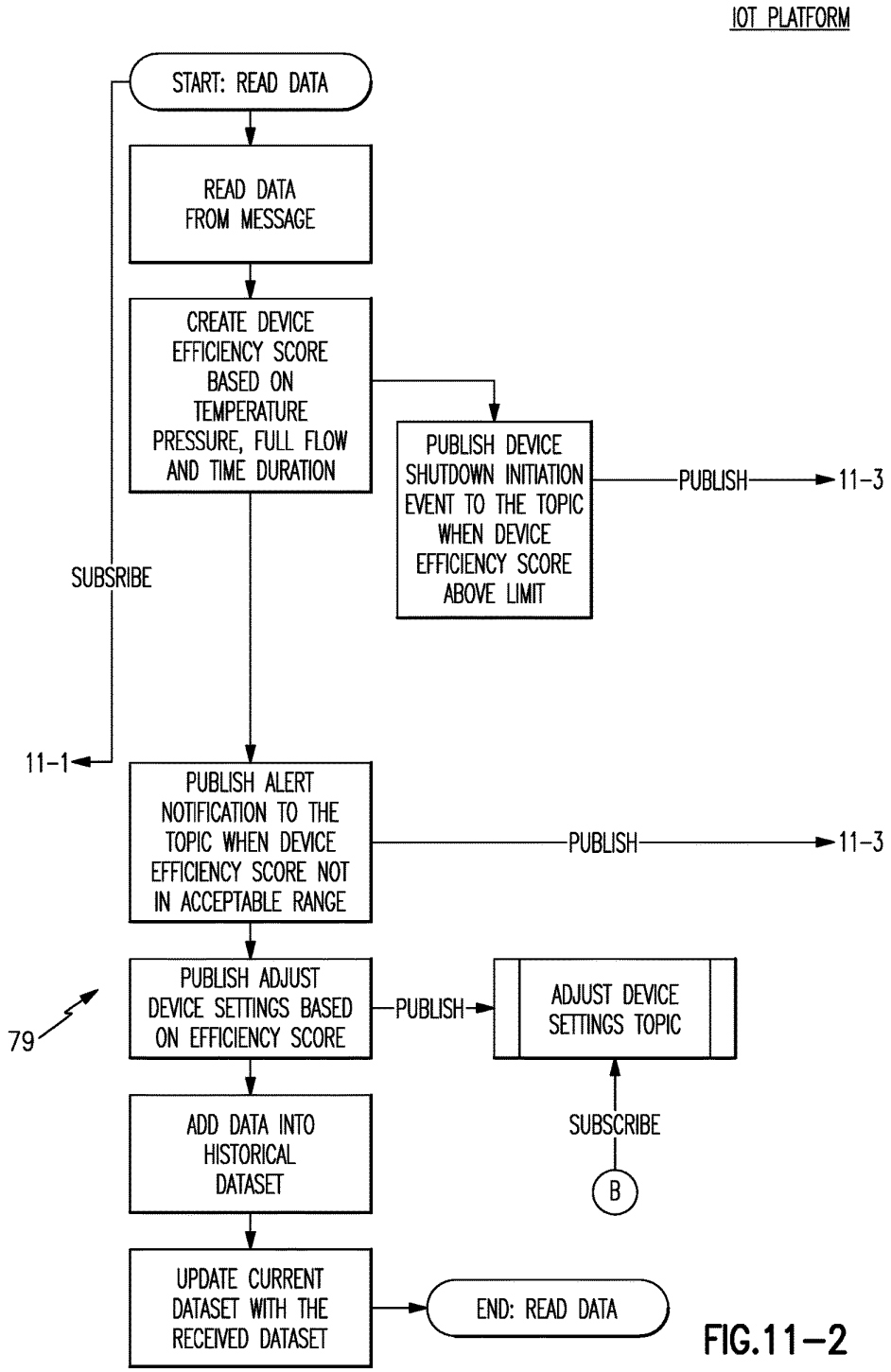
IOT PLATFORM
START: READ DATA
READ DATA FROM MESSAGE
CREATE DEVICE EFFICIENCY SCORE BASED ON TEMPERATURE PRESSURE, FULL FLOW AND TIME DURATION
PUBLISH DEVICE SHUTDOWN INITIATION EVENT TO THE TOPIC WHEN DEVICE EFFICIENCY SCORE ABOVE LIMIT
PUBLISH
11-3
SUBSRIBE
11-1
PUBLISH ALERT NOTIFICATION TO THE TOPIC WHEN DEVICE EFFICIENCY SCORE NOT IN ACCEPTABLE RANGE
PUBLISH
11-3
79
PUBLISH ADJUST DEVICE SETTINGS BASED ON EFFICIENCY SCORE
PUBLISH
ADJUST DEVICE SETTINGS TOPIC
SUBSCRIBE
B
ADD DATA INTO HISTORICAL DATASET
UPDATE CURRENT DATASET WITH THE RECEIVED DATASET
END: READ DATA

FIG.11-2

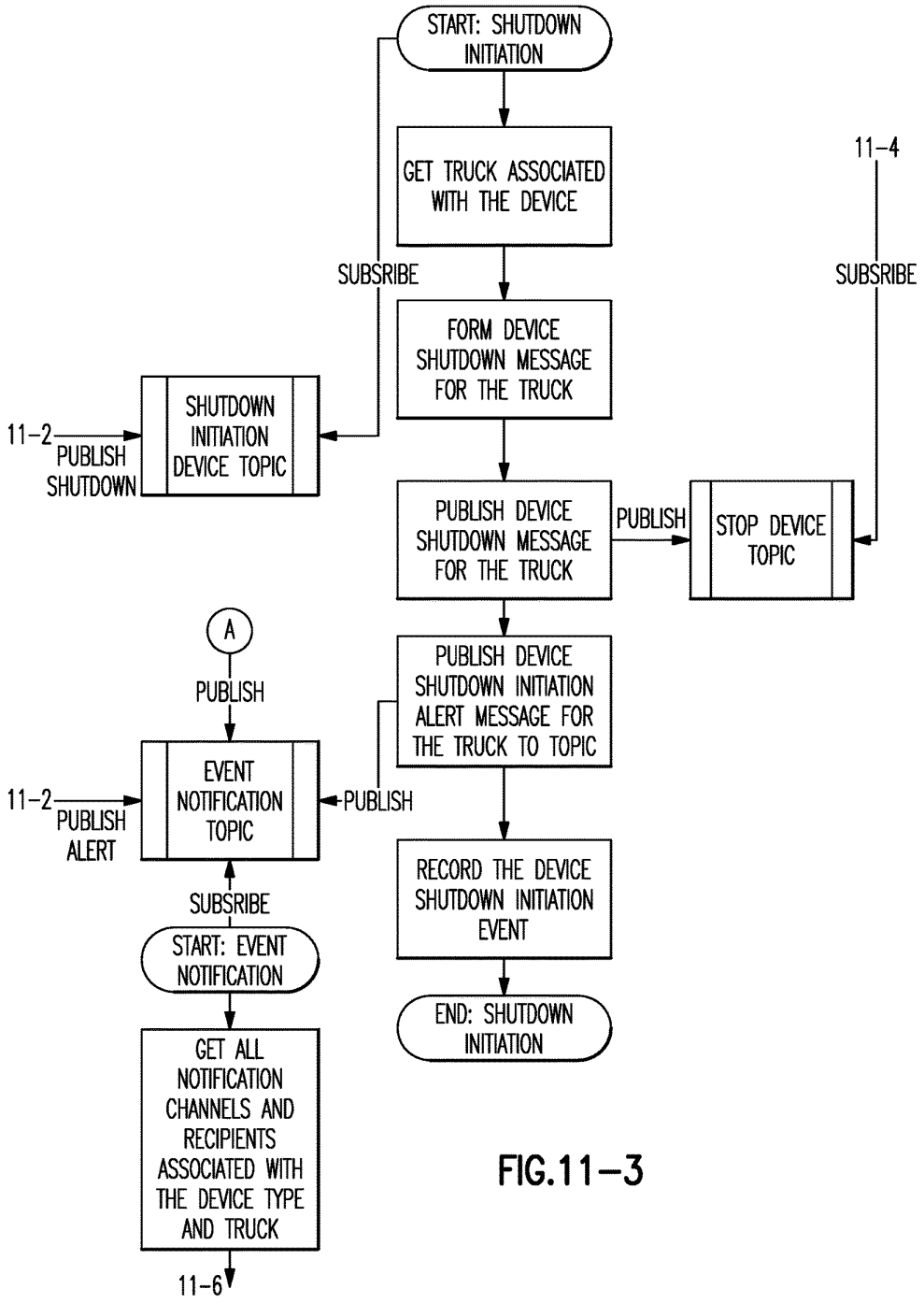
START: SHUTDOWN INITIATION
GET TRUCK ASSOCIATED WITH THE DEVICE
SUBSRIBE
FORM DEVICE SHUTDOWN MESSAGE FOR THE TRUCK
11-2
PUBLISH SHUTDOWN
SHUTDOWN INITIATION DEVICE TOPIC
PUBLISH DEVICE SHUTDOWN MESSAGE FOR THE TRUCK
PUBLISH
STOP DEVICE TOPIC
11-4
SUBSRIBE
A
PUBLISH
PUBLISH DEVICE SHUTDOWN INITIATION ALERT MESSAGE FOR THE TRUCK TO TOPIC
11-2
PUBLISH ALERT
EVENT NOTIFICATION TOPIC
PUBLISH
SUBSRIBE
START: EVENT NOTIFICATION
GET ALL NOTIFICATION CHANNELS AND RECIPIENTS ASSOCIATED WITH THE DEVICE TYPE AND TRUCK
11-6
RECORD THE DEVICE SHUTDOWN INITIATION EVENT
END: SHUTDOWN INITIATION

FIG.11-3

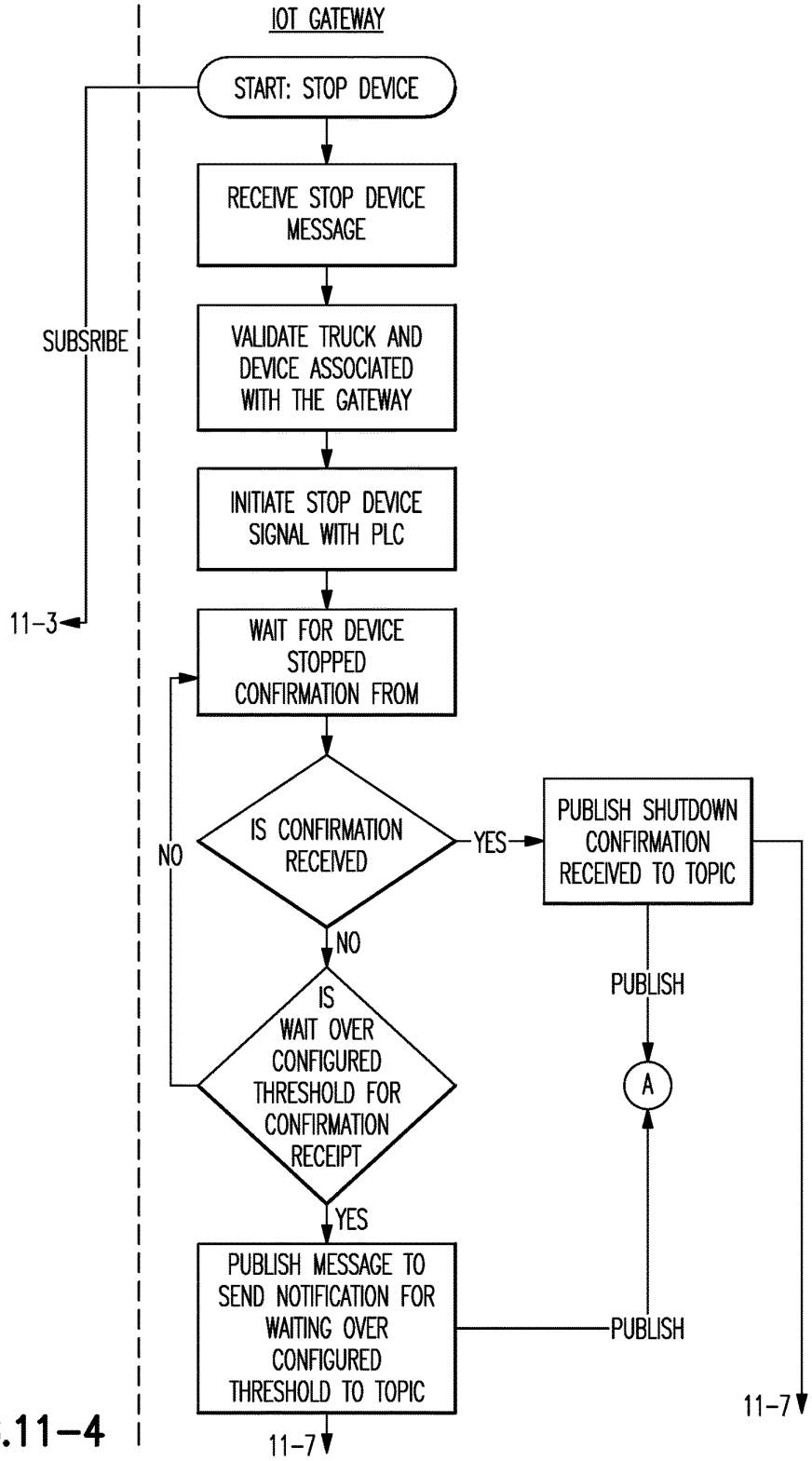
IOT GATEWAY
START: STOP DEVICE
RECEIVE STOP DEVICE MESSAGE
VALIDATE TRUCK AND DEVICE ASSOCIATED WITH THE GATEWAY
INITIATE STOP DEVICE SIGNAL WITH PLC
WAIT FOR DEVICE STOPPED CONFIRMATION FROM
IS CONFIRMATION RECEIVED
YES
NO
PUBLISH SHUTDOWN CONFIRMATION RECEIVED TO TOPIC
PUBLISH
A
IS WAIT OVER CONFIGURED THRESHOLD FOR CONFIRMATION RECEIPT
NO
YES
PUBLISH MESSAGE TO SEND NOTIFICATION FOR WAITING OVER CONFIGURED THRESHOLD TO TOPIC
PUBLISH
SUBSRIBE
11-3
11-7
11-7

FIG.11-4

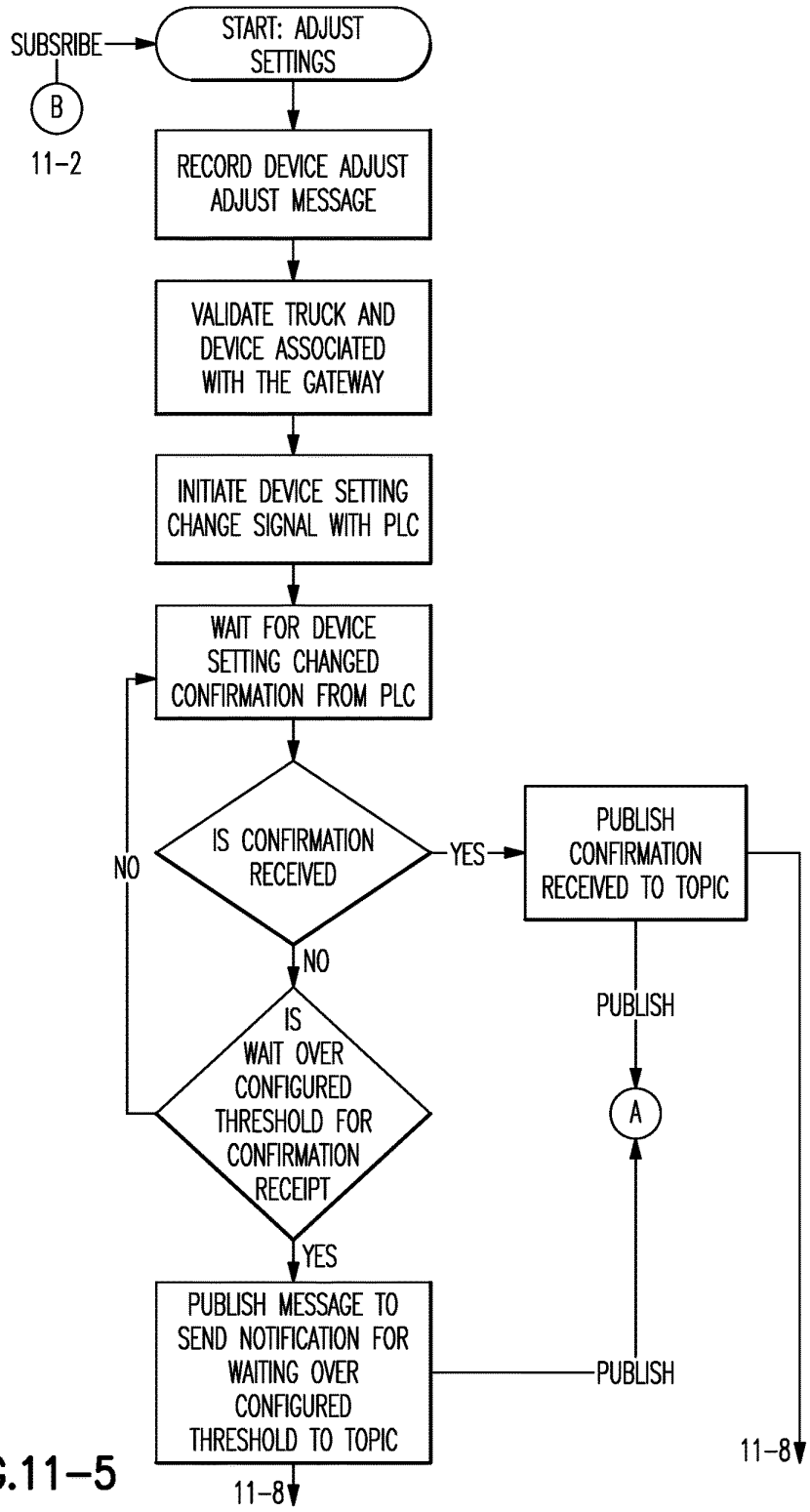
SUBSRIBE
B
11-2
START: ADJUST SETTINGS
RECORD DEVICE ADJUST ADJUST MESSAGE
VALIDATE TRUCK AND DEVICE ASSOCIATED WITH THE GATEWAY
INITIATE DEVICE SETTING CHANGE SIGNAL WITH PLC
WAIT FOR DEVICE SETTING CHANGED CONFIRMATION FROM PLC
IS CONFIRMATION RECEIVED
YES
NO
PUBLISH CONFIRMATION RECEIVED TO TOPIC
PUBLISH
A
IS WAIT OVER CONFIGURED THRESHOLD FOR CONFIRMATION RECEIPT
NO
YES
PUBLISH MESSAGE TO SEND NOTIFICATION FOR WAITING OVER CONFIGURED THRESHOLD TO TOPIC
PUBLISH
11-8
11-8

FIG.11-5

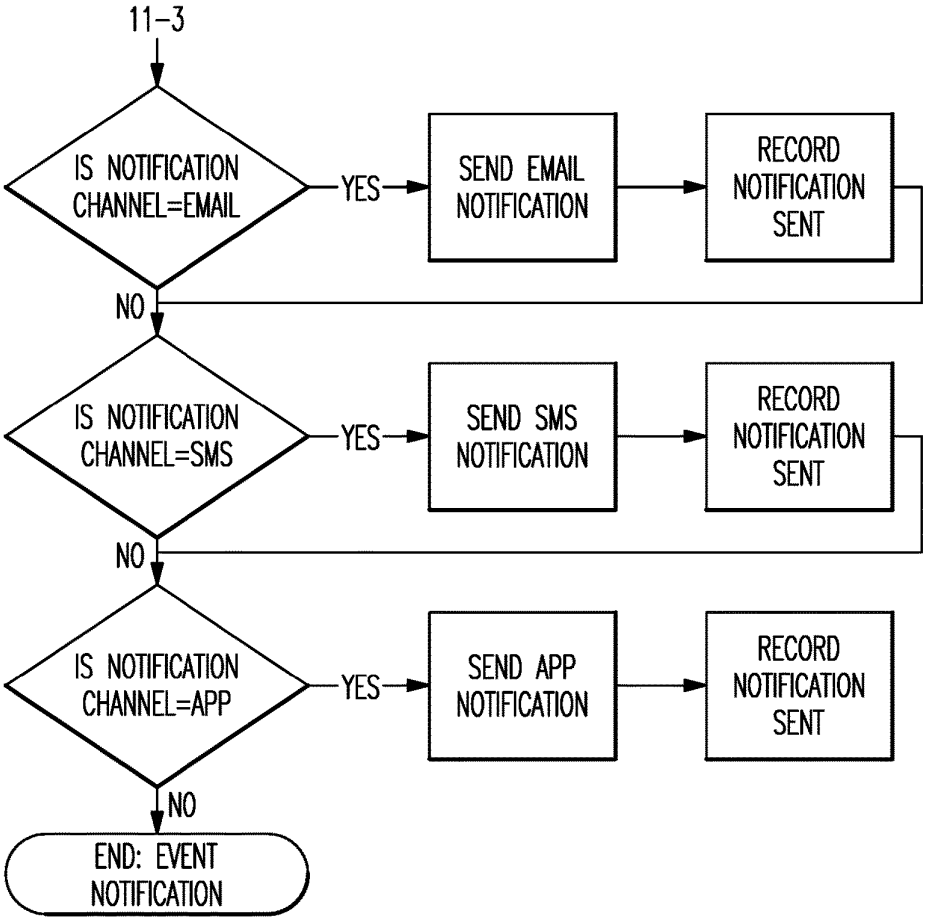
11-3
IS NOTIFICATION CHANNEL=EMAIL
YES
SEND EMAIL NOTIFICATION
RECORD NOTIFICATION SENT
NO
IS NOTIFICATION CHANNEL=SMS
YES
SEND SMS NOTIFICATION
RECORD NOTIFICATION SENT
NO
IS NOTIFICATION CHANNEL=APP
YES
SEND APP NOTIFICATION
RECORD NOTIFICATION SENT
NO
END: EVENT NOTIFICATION

FIG.11-6

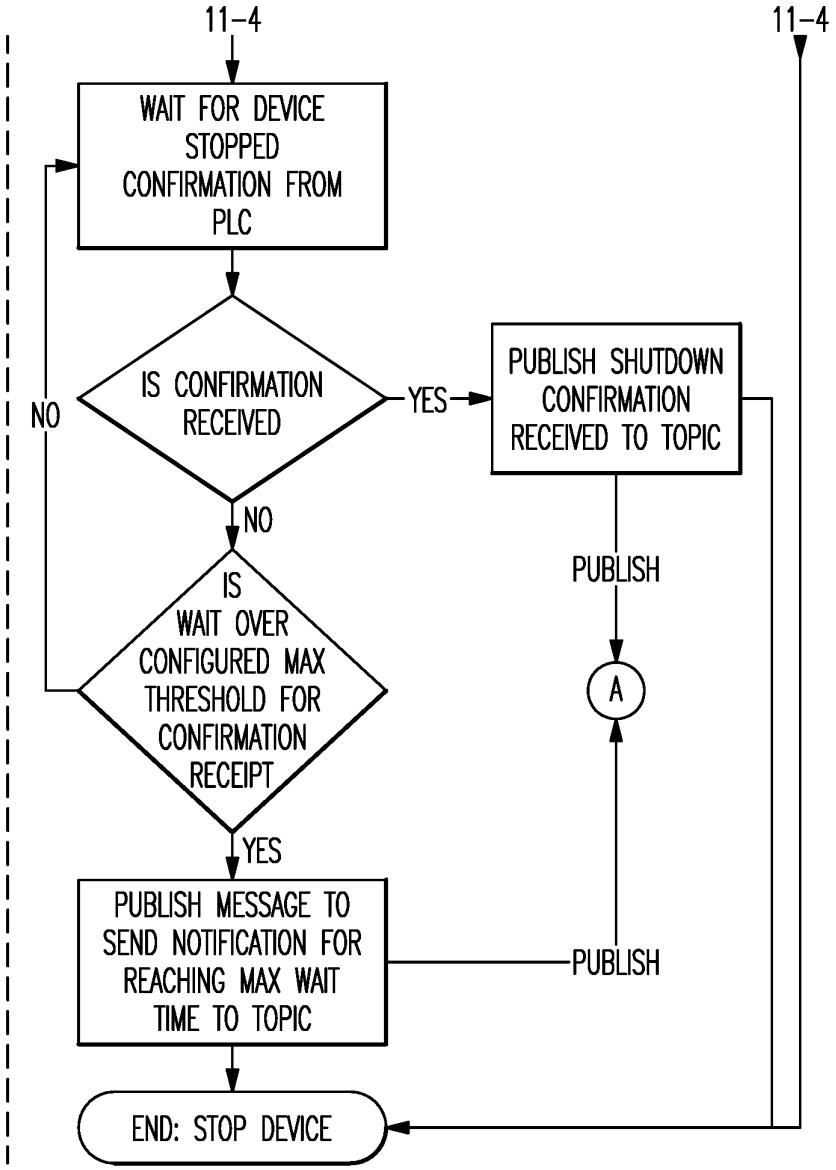
11-4
11-4
WAIT FOR DEVICE STOPPED CONFIRMATION FROM PLC
IS CONFIRMATION RECEIVED
YES
PUBLISH SHUTDOWN CONFIRMATION RECEIVED TO TOPIC
NO
NO
IS WAIT OVER CONFIGURED MAX THRESHOLD FOR CONFIRMATION RECEIPT
PUBLISH
A
YES
PUBLISH MESSAGE TO SEND NOTIFICATION FOR REACHING MAX WAIT TIME TO TOPIC
PUBLISH
END: STOP DEVICE

FIG.11-7

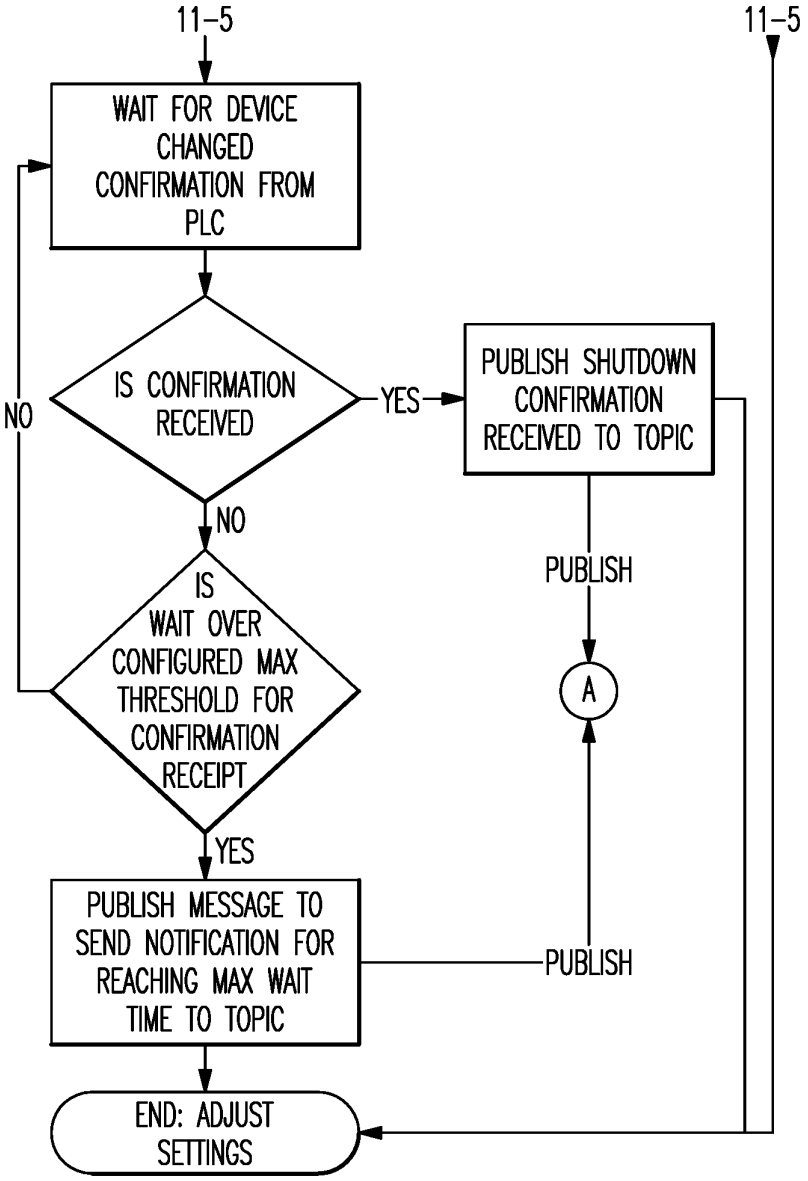
11-5
11-5
WAIT FOR DEVICE CHANGED CONFIRMATION FROM PLC
IS CONFIRMATION RECEIVED
YES
PUBLISH SHUTDOWN CONFIRMATION RECEIVED TO TOPIC
NO
NO
IS WAIT OVER CONFIGURED MAX THRESHOLD FOR CONFIRMATION RECEIPT
PUBLISH
A
YES
PUBLISH MESSAGE TO SEND NOTIFICATION FOR REACHING MAX WAIT TIME TO TOPIC
PUBLISH
END: ADJUST SETTINGS

FIG.11-8

MOBILE DISTRIBUTION STATION WITH AISLE WALKWAY

BACKGROUND

Hydraulic fracturing (also known as fracking) is a well-stimulation process that utilizes pressurized liquids to fracture rock formations. Pumps and other equipment used for hydraulic fracturing typically operate at the surface of the well site. The equipment may operate semi-continuously, until refueling is needed, at which time the equipment may be shut-down for refueling. Shut-downs are costly and reduce efficiency. More preferably, to avoid shut-downs fuel is replenished in a hot-refueling operation while the equipment continues to run. This permits fracking operations to proceed fully continuously; however, hot-refueling can be difficult to reliably sustain for the duration of the fracking operation.

SUMMARY

A distribution station according to an example of the present disclosure includes a mobile trailer, a pump on the mobile trailer, first and second manifolds on the mobile trailer and fluidly connected with the pump, a plurality of reels on the mobile trailer, a plurality of hoses connected, respectively, with the reels. A portion of the reels are connected with the first manifold and another portion of the reels are connected with the second manifold. Valves on the mobile trailer are each situated between one of the first or second manifolds and a respective different one of the hoses. Fluid level sensors are associated with respective different ones of the hoses. The reels are arranged on first and second opposed sides in the mobile trailer, with an aisle walkway down the middle of the mobile trailer.

In a further embodiment of any of the foregoing embodiments, the reels on each of the first and second opposed sides are arranged in upper and lower rows of reels.

A further embodiment of any of the foregoing embodiments includes first and second support racks on which the reels are supported. The first support rack is arranged on the first side and the second support rack arranged on the second side.

In a further embodiment of any of the foregoing embodiments, the aisle walkway has an aisle width and the reels have a reel diameter, and the aisle width is greater than the reel diameter by a factor of at least 1.3.

In a further embodiment of any of the foregoing embodiments, the trailer has a trailer width of no greater than about 96 inches.

In a further embodiment of any of the foregoing embodiments, a ratio of a number of reels in the upper row to a number of reels in the lower row is 1:1.

In a further embodiment of any of the foregoing embodiments, the mobile trailer includes a trailer end wall that has an outside door, and an inside wall that defines first and second compartments in the mobile trailer. The outside door opens into the first compartment, and at least the manifolds and the reels are in the first compartment.

In a further embodiment of any of the foregoing embodiments, the inside wall includes an inside door providing access between the first compartment and the second compartment. The aisle walkway extends from the outside door to the inside door.

A further embodiment of any of the foregoing embodiments includes a controller in the second compartment. The controller is configured to operate the valves.

In a further embodiment of any of the foregoing embodiments, the second compartment is insulated with a fire resistant or retardant material.

In a further embodiment of any of the foregoing embodiments, the aisle walkway has an aisle width and the reels have a reel diameter, and the aisle width is greater than the reel diameter by a factor of at least 1.3.

In a further embodiment of any of the foregoing embodiments, the aisle width is greater than the reel diameter by a factor of at least 1.5.

In a further embodiment of any of the foregoing embodiments, the aisle walkway has an aisle width and the mobile trailer has a trailer width, and a ratio of the trailer width to the aisle width is no greater than 5.

In a further embodiment of any of the foregoing embodiments, the ratio of the trailer width to the aisle width is greater than 2.

In a further embodiment of any of the foregoing embodiments, the ratio of the trailer width to the aisle width is equal to or less than 4.

A further embodiment of any of the foregoing embodiments includes a floor pan in the mobile trailer.

A distribution station according to an example of the present disclosure includes a mobile trailer, a pump on the mobile trailer, first and second manifolds on the mobile trailer and fluidly connected with the pump, and a plurality of reels on the mobile trailer. A plurality of hoses are connected, respectively, with the reels. A portion of the reels are connected with the first manifold and another portion of the reels are connected with the second manifold. Valves on the mobile trailer are situated between one of the first or second manifolds and respective different ones of the hoses. A plurality of fluid level sensors are associated with respective different ones of the hoses. The mobile trailer includes first and second opposed trailer side walls. A first group of the hoses are deployable from the first trailer side wall and a second group of the hoses are deployable from the second trailer side wall.

In a further embodiment of any of the foregoing embodiments, the reels are arranged on first and second opposed sides in the mobile trailer such that there is an aisle walkway down the middle of the mobile trailer.

In a further embodiment of any of the foregoing embodiments, the reels on each of the first and second opposed sides are arranged in upper and lower rows of reels.

In a further embodiment of any of the foregoing embodiments, the aisle walkway has an aisle width and the reels have a reel diameter, and the aisle width is greater than the reel diameter by a factor of at least 1.3.

In a further embodiment of any of the foregoing embodiments, the mobile trailer has a trailer width of no greater than about 96 inches.

A further embodiment of any of the foregoing embodiments includes a floor pan in the mobile trailer.

BRIEF DESCRIPTION OF THE DRAWINGS

The various features and advantages of the present disclosure will become apparent to those skilled in the art from the following detailed description. The drawings that accompany the detailed description can be briefly described as follows.

FIG. **1** illustrates an example mobile distribution station.

FIG. **2** illustrates an internal layout of a mobile distribution station.

FIG. **3** illustrates an isolated view of hose reels on a support rack used in a mobile distribution station.

FIG. **4** illustrates an example of a connection between a manifold, a control valve, and a reel.

FIG. **5** illustrates a sectioned view of an example hose for a mobile distribution station.

FIG. **6** illustrates an example of an integrated fuel cap sensor for a mobile distribution station.

FIG. **7** illustrates an example of the routing of a sensor communication line through a reel in a mobile distribution station.

FIG. **8** illustrates an example of a mobile distribution station with an integrated floor pan.

FIG. **9** illustrates a system that can be used to remotely monitor and manage one or more mobile distribution stations.

FIG. **10** illustrates a workflow logic diagram that represents an example of a method for managing one or more mobile distribution stations.

FIG. **11** illustrates another workflow logic diagram that represents an example of a method for managing one or more mobile distribution stations.

DETAILED DESCRIPTION

FIG. **1** illustrates a mobile distribution station **20** and FIG. **2** illustrates an internal layout of the station **20**. As will be described, the station **20** may serve in a "hot-refueling" capacity to distribute fuel to multiple pieces of equipment while the equipment is running, such as fracking equipment at a well site. As will be appreciated, the station **20** is not limited to applications for fracking or for delivering fuel. The examples herein may be presented with respect to fuel delivery, but the station **20** may be used in mobile delivery of other fluids, in other gas/petroleum recovery operations, or in other operations where mobile refueling or fluid delivery will be of benefit.

In this example, the station **20** includes a mobile trailer **22**. Generally, the mobile trailer **22** is elongated and has first and second opposed trailer side walls W**1** and W**2** that join first and second opposed trailer end walls E**1** and E**2**. Most typically, the trailer **22** will also have a closed top (not shown). The trailer side walls W**1**/W**2** define a trailer width, TW. The mobile trailer **22** may have wheels that permit the mobile trailer **22** to be moved by a vehicle from site to site to service different hot-refueling operations.

In this example, the mobile trailer **22** has two compartments. A first compartment **24** includes the physical components for distributing fuel, such as diesel fuel, and a second compartment **26** serves as an isolated control room for managing and monitoring fuel distribution. The compartments **24**/**26** are separated by an inside wall **28***a* that has an inside door **28***b*. The second compartment **26** may be insulated with a fire resistant or retardant material **26***a*. In the event of a fire threat, a worker may take cover in the second compartment **26**. The fire resistant or retardant material **26***a* may shield the second compartment and thus temporarily protect the worker under such circumstances. The second compartment **26** may include an auxiliary escape door to provide external egress from the trailer **22**. Thus, if needed, a worker may exit the trailer **22** other than by the first compartment **24**.

The first compartment **24** includes one or more pumps **30**. Fuel may be provided to the one or more pumps **30** from an external fuel source, such as a tanker truck on the site. On the trailer **22**, the one or more pumps **30** are fluidly connected via a fuel line **32** with a high precision register **34** for metering fuel. The fuel line **32** may include, but is not limited to, hard piping. In this example, the fuel line **32** includes a filtration and air eliminator system **36***a* and one or more sensors **36***b*. Although optional, the system **36***a* is beneficial in many implementations, to remove foreign particles and air from the fuel prior to delivery to the equipment. The one or more sensors **36***b* may include a temperature sensor, a pressure sensor, or a combination thereof, which assist in fuel distribution management.

The fuel line **32** is connected with one or more manifolds **38**. In the illustrated example, the station **20** includes two manifolds **38** that arranged on opposed sides of the compartment **24**. As an example, the manifolds **38** are elongated tubes that are generally larger in diameter than the fuel line **32** and that have at least one inlet and multiple outlets. Each hose **40** is wound, at least initially, on a reel **42** that is rotatable to extend or retract the hose **40** externally through one or more windows of the trailer **22**. Each reel **42** has a reel diameter RD, which is the outside diameter or dimension of the reel **42**. Most typically, all or substantially all of the reels **42** will be the same size and thus have a common reel diameter RD. Each reel **42** may have an associated motor to mechanically extend and retract the hose **40**.

As shown in an isolated view in FIG. **3**, the reels **42** are mounted on a support rack **42***a*. In this example, the support rack **42***a* is configured with upper and lower rows of reels **42**. For instance, a ratio of the number of reels **42** in the upper row to a number of reels in the lower row on the support rack **42***a* is 1:1. As an example, each row has five reels **42** such that each support rack **42***a* provides ten reels **42** and thus ten hoses **40**. There are two support racks **42***a* (FIG. **2**) arranged on opposed sides of the first compartment **24**. The reels **42** are thus likewise arranged on opposed sides of the first compartment **24** in the trailer **22**. The station **20** therefore can provide twenty hoses **40** in the illustrated arrangement, with ten hoses **40** deployable on each side of the station **20**. For instance, the first group of ten hoses **40** on one side of the compartment **24** are deployable from the first trailer side wall W**1** and the second group of ten hoses **40** are deployable from the second trailer side wall W**2**. As will be appreciated, fewer or additional reels and hoses may be used in alternative examples.

An aisle walkway (A) runs down the middle of the trailer **22**. In this example, the aisle walkway A runs between the support racks **42***a* from an outside door E to the inside door **28***b*. Most typically, the aisle walkway A will include the space or volume through which workers walk to operate the station **20**. The aisle walkway A has an aisle width A**1**. As an example, the aisle width A**1** is the largest constant width walkway down the trailer **22** adjacent at least the reels **42** that is not intruded upon by affixed equipment in the trailer **22**, such as the reels **42**, support racks **42***a*, other support structures, etc.

The size of the aisle width A can contribute to reducing the potential for undesired incidents. For instance, there may be two or three or more workers that walk up and down the aisle walkway A in connection with their job duties. The workers need space to potentially pass by each other in the aisle walkway A and carry equipment through the aisle walkway A without bumping into each other or into equipment affixed in the trailer **22**.

The aisle width A**1**, however, is not unlimited and is subject to space availability and other factors relating to the performance of the station **20**. For instance, the reel diameter RD relates to the lengths of hoses that can be stored on the reels **42**. A relatively large reel diameter RD can accommodate a long hose winding, while a relatively smaller reel diameter RD would only accommodate a shorter hose winding. Longer hoses potentially provide greater access to

equipment on a site that is located farther from the station, but longer hoses require more space in a station than shorter hoses due to the size of the reel needed to wind the longer hose. There is thus a multi-faceted interplay between the size and number of reels, arrangement of reels, and size/location of an aisle.

In a middle aisle arrangement as with the aisle walkway A, the aisle width A**1** is greater than the reel diameter RD by a factor of at least 1.3. In a further example, the aisle width A**1** is greater than the reel diameter RD by a factor of at least 1.5, and the trailer width TW is no greater than about 96 inches.

Additionally or alternatively, in a further example, a ratio of the trailer width TW to the aisle width A**1** is no greater than 5. In a further example, the ratio of the trailer width TW to the aisle width A**1** is also greater than 2. In a further example, the ratio of the trailer width TW to the aisle width A**1** is also equal to or less than 4. In a further example, the trailer width TW is no greater than about 96 inches and the ratio of the trailer width TW to the aisle width A**1** is greater than 2 and no greater than 5. In a further example of any of the examples herein, the aisle width A**1** is between about 30 inches and about 38 inches. The parameters above provide good station performance in combination with good packaging in the trailer **22** and good aisle size for worker movement.

As shown in a representative example in FIG. **4**, each hose **40** is connected to a respective one of the reels **42** and a respective one of a plurality of control valves **44**. For example, a secondary fuel line **46** leads from the manifold **38** to the reel **42**. The control valve **44** is in the secondary fuel line **46**. The control valve **44** is moveable between open and closed positions to selectively permit fuel flow from the manifold **38** to the reel **42** and the hose **40**. For example, the control valve **44** is a powered valve, such as a solenoid valve.

In the illustrated example, the first compartment **24** also includes a sensor support rack **48**. The sensor support rack **48** holds integrated fuel cap sensors **50** (when not in use), or at least portions thereof. When in use, each integrated fuel cap sensor **50** is temporarily affixed to a piece of equipment (i.e., the fuel tank of the equipment) that is subject to the hot-refueling operation. Each hose **40** may include a connector end **40***a* and each integrated fuel cap sensor **50** may have a corresponding mating connector to facilitate rapid connection and disconnection of the hose **40** with the integrated fuel cap sensor **50**. For example, the connector end **40***a* and mating connector on the integrated fuel cap sensor **50** form a hydraulic quick-connect.

At least the control valves **44**, pump or pumps **30**, sensor or sensors **36***b*, and register **34** are in communication with a controller **52** located in the second compartment **26**. As an example, the controller **52** includes software, hardware, or both that is configured to carry out any of the functions described herein. In one further example, the controller **52** includes a programmable logic controller with a touch-screen for user input and display of status data. For example, the screen may simultaneously show multiple fluid levels of the equipment that is being serviced.

When in operation, the integrated fuel cap sensors **50** are mounted on respective fuel tanks of the pieces of equipment that are subject to the hot-refueling operation. The hoses **40** are connected to the respective integrated fuel cap sensors **50**. Each integrated fuel cap sensor **50** generates signals that are indicative of the fuel level in the fuel tank of the piece of equipment on which the integrated fuel cap sensor **50** is mounted. The signals are communicated to the controller **52**.

The controller **52** interprets the signals and determines the fuel level for each fuel tank of each piece of equipment. In response to a fuel level that falls below a lower threshold, the controller **52** opens the control valve **44** associated with the hose **40** to that fuel tank and activates the pump or pumps **30**. The pump or pumps **30** provide fuel flow into the manifolds **38** and through the open control valve **44** and reel **42** such that fuel is provided through the respective hose **40** and integrated fuel cap sensor **50** into the fuel tank. The lower threshold may correspond to an empty fuel level of the fuel tank, but more typically the lower threshold will be a level above the empty level to reduce the potential that the equipment completely runs out of fuel and shuts down. The controller **52** can also be programmed with a failsafe measure related to the operation of the fuel cap sensors **50**. As an example, once a control valve **44** is open, if the controller **52** does not detect a change in fuel level from the fuel cap sensor **50** associated with the control valve **44** within a preset time period, the controller **52** shuts the pump **30** off and closes the control valve **44**. Thus, if a hose **40** were to rupture, spillage of fuel is limited to the volume of fuel in the hose **40**. For instance, the preset time period may be three seconds, six seconds, ten seconds, or fifteen seconds, which may limit spillage to approximately fifteen gallons for a given size of hose.

The controller **52** also determines when the fuel level in the fuel tank reaches an upper threshold. The upper threshold may correspond to a full fuel level of the fuel tank, but more typically the upper threshold will be a level below the full level to reduce the potential for overflow. In response to reaching the upper threshold, the controller **52** closes the respective control valve **44** and ceases the pump or pumps **30**. If other control valves **44** are open or are to be opened, the pump or pumps **30** may remain on. The controller **52** can also be programmed with an electronic stop failsafe measure to prevent over-filling. As an example, once an upper threshold is reached on a first tank and the control valve **44** is closed, but the pump **30** is otherwise to remain on to fill other tanks, if the fuel level continues to rise in the first tank, the controller **52** shuts the pump **30** off.

Multiple control valves **44** may be open at one time, to provide fuel to multiple fuel tanks at one time. Alternatively, if there is demand for fuel from two or more fuel tanks, the controller **52** may sequentially open the control valves **44** such that the tanks are refueled sequentially. For instance, upon completion of refueling of one fuel tank, the controller **52** closes the control valve **44** of the hose **40** associated with that tank and then opens the next control valve **44** to begin refueling the next fuel tank. Sequential refueling may facilitate maintaining internal pressure in the manifold and fuel line **32** above a desired or preset pressure threshold to more rapidly deliver fuel. Similarly, the controller **52** may limit the number of control valves **44** that are open at any one instance in order to maintain the internal pressure in the manifold and fuel line **32** above a desired or preset threshold. The controller **52** may perform the functions above while in an automated operating mode. Additionally, the controller **52** may have a manual mode in which a user can control at least some functions through the PLC, such as starting and stopped the pump **30** and opening and closing control valves **44**. For example, manual mode may be used at the beginning of a job when initially filling tanks to levels at which the fuel cap sensors **50** can detect fuel and/or during a job if a fuel cap sensor **50** becomes inoperable. Of course, operating in manual mode may deactivate some automated functions, such as filling at the low threshold or stopping at the high threshold.

In addition to the use of the sensor signals to determine fuel level, or even as an alternative to use of the sensor signals, the refueling may be time-based. For instance, the fuel consumption of a given piece of equipment may be known such that the fuel tank reaches the lower threshold at known time intervals. The controller **52** is operable to refuel the fuel tank at the time intervals rather than on the basis of the sensor signals, although sensor signals may also be used to verify fuel level.

The controller **52** also tracks the amount of fuel provided to the fuel tanks. For instance, the register **34** precisely measures the amount of fuel provided from the pump or pumps **30**. As an example, the register **34** is an electronic register and has a resolution of about 0.1 gallons. The register **34** communicates measurement data to the controller **52**. The controller **52** can thus determine the total amount of fuel used to very precise levels. The controller **52** may also be configured to provide outputs of the total amount of fuel consumed. For instance, a user may program the controller **52** to provide outputs at desired intervals, such as by worker shifts or daily, weekly, or monthly periods. The outputs may also be used to generate invoices for the amount of fuel used. As an example, the controller **52** may provide a daily output of fuel use and trigger the generation of an invoice that corresponds to the daily fuel use, thereby enabling almost instantaneous invoicing.

In a further example, the integrated fuel cap sensors **50** are each hard-wired to the controller **52**. The term "hard-wired" or variations thereof refers to a wired connection between two components that serves for electronic communication there between, which here a sensor and a controller. The hard-wiring may facilitate providing more reliable signals from the integrated fuel cap sensors **50**. For instance, the many pieces of equipment, vehicles, workers, etc. at a site may communicate using wireless devices. The wireless signals may interfere with each other and, therefore, degrade communication reliability. Hard-wiring the integrated fuel cap sensors **50** to the controller **52** facilitates reduction in interference and thus enhances reliability.

In general, hard-wiring in a hot-refueling environment presents several challenges. For example, a site has many workers walking about and typically is located on rough terrain. Thus, as will be described below, each integrated fuel cap sensor **50** is hard-wired through the associated hose **40** to the controller **52**.

FIG. **5** illustrates a representative portion of one of the hoses **40** and, specifically, the end of the hose **40** that will be located at the fuel tank of the equipment being refueled. In this example, the hose **40** includes a connector **60** at the end for detachably connecting the hose **40** to the integrated fuel cap sensors **50**. The hose **40** is formed of a tube **62** and a sleeve **64** that circumscribes the tube **62**. As an example, the tube **62** may be a flexible elastomeric tube and the sleeve **64** may be a flexible fabric sleeve. The sleeve **64** is generally loosely arranged around the tube **62**, although the sleeve **64** may closely fit on the tube **62** to prevent substantial slipping of the sleeve **64** relative to the tube **62** during use and handling. Optionally, to further prevent slipping and/or to secure the sleeve **64**, bands may be tightened around the hose **40**. As an example, one or more steel or stainless steel bands can be provided at least near the ends of the hose **40**.

A plurality of sensor communication lines **66** (one shown) are routed with or in the respective hoses **40**. For instance, each line **66** may include a wire, a wire bundle, and/or multiple wires or wire bundles. In one further example, the line **66** is a low milli-amp intrinsic safety wiring, which serves as a protection feature for reducing the concern for operating electrical equipment in the presence of fuel by limiting the amount of thermal and electrical energy available for ignition. In this example, the line **66** is routed through the hose **40** between (radially) the tube **62** and the sleeve **64**. The sleeve **64** thus serves to secure and protect the line **66**, and the sleeve **64** may limit spill and spewing if there is a hose **40** rupture. In particular, since the line **66** is secured in the hose **40**, the line **66** does not present a tripping concern for workers. Moreover, in rough terrain environments where there are stones, sand, and other objects that could damage the line **66** if it were free, the sleeve **64** shields the line **66** from direct contact with such objects. In further examples, the line **66** may be embedded or partially embedded in the tube **62** or the sleeve **64**.

In this example, the line **66** extends out from the end of the hose **40** and includes a connector **68** that is detachably connectable with a respective one of the integrated fuel cap sensors **50**. For example, FIG. **6** illustrates a representative example of one of the integrated fuel cap sensors **50**. The integrated fuel cap sensor **50** includes a cap portion **50***a* and a fluid level sensor portion **50***b*. The cap portion **50***a* is detachably connectable with a port of a fuel tank. The cap portion **50***a* includes a connector port **50***c*, which is detachably connectable with the connector **60** of the hose **40**. The sensor portion **50***b* includes a sensor **50***d* and a sensor port **50***e* that is detachably connectable with the connector **68** of the line **66**. The fuel cap sensor **50** may also include a vent port that attaches to a drain hose, to drain any overflow into a containment bucket and/or reduce air pressure build-up in a fuel tank. Thus, a user may first mount the cap portion **50***a* on the fuel tank of the equipment, followed by connecting the hose **40** to the port **50***c* and connecting the line **66** to the port **50***e*.

The sensor **50***d* may be any type of sensor that is capable of detecting fluid or fuel level in a tank. In one example, the sensor **50***d* is a guided wave radar sensor. A guided wave radar sensor may include a transmitter/sensor that emits radar waves, most typically radio frequency waves, down a probe. A sheath may be provided around the probe. For example, the sheath may be a metal alloy (e.g., stainless steel or aluminum) or polymer tube that surrounds the probe. One or more bushings may be provided between the probe and the sheath, to separate the probe from the sheath. The sheath shields the probe from contact by external objects, the walls of a fuel tank, or other components in a fuel tank, which might otherwise increase the potential for faulty sensor readings. The probe serves as a guide for the radar waves. The radar waves reflect off of the surface of the fuel and the reflected radar waves are received into the transmitter/sensor. A sensor controller determines the "time of flight" of the radar waves, i.e., how long it takes from emission of the radar waves for the radar waves to reflect back to the transmitter/sensor. Based on the time, the sensor controller, or the controller **52** if the sensor controller does not have the capability, determines the distance that the radar waves travel. A longer distance thus indicates a lower fuel level (farther away) and a shorter distance indicates a higher fuel level (closer).

The line **66** routes through the hose **40** and back to the reel **42** in the trailer **22**. For example, the line **66** is also routed or hard-wired through the reel **42** to the controller **52**. FIG. **7** illustrates a representative example of the routing in the reel **42**. In this example, the reel **42** includes a spindle **42***b* about which the reel is rotatable. The spindle **42***b* may be hollow, and the line **66** may be routed through the spindle **42***b*. The reel **42** may also include a connector **42***c* mounted

thereon. The connector **42***c* receives the line **66** and serves as a port for connection with another line **66***a* to the controller **52**.

The lines **66***a* may converge to one or more communication junction blocks or "bricks" prior to the controller **52**. The communication junction blocks may serve to facilitate the relay of the signals back to the controller **52**. The communication junction blocks may alternatively or additionally serve to facilitate identification of the lines **66**, and thus the signals, with respect to which of the hoses a particular line **66** is associated with. For instance, a group of communication junction blocks may have unique identifiers and the lines **66** into a particular communication junction block may be associated with identifiers. A signal relayed into the controller **52** may thus be associated with the identifier of the communication junction blocks and a particular line **66** of that communication junction block in order to identify which hose the signal is to be associated with. The valves **44** may also communicate with the controller **52** in a similar manner through the communication junction blocks.

As illustrated in a further example in FIG. **8**, the station **20** may be further enhanced to reduce the potential for fluid or fuel escape. The trailer **22**, depicted here in phantom, includes a floor pan **80**. The floor pan **80** may be formed of metal, polymer, or combinations thereof and serves to reduce or prevent the escape of fluid or fuel from inside the trailer **22**. In comparison to a temporary, moveable catch basin, the floor pan **80** is a permanent fixture in the trailer **22**, and may be structurally affixed in the trailer **22** by fasteners, adhesive, or the like.

As an example, the floor pan **80** includes a bottom **80***a* that joins sides **80***b* to define a container cavity **80***c*. For instance, the floor pan **80** lines the bottom portion of the trailer **22**. The bottom **80***a* and sides **80***b* seal the container cavity **80***c* such that any fluid or fuel that leaks in the trailer **22** is caught and contained in the floor pan **80**, to reduce the potential of spilling or leaking out from the trailer **22**. The floor pan **80** may line only the first compartment **24** or may line both the first and second compartments **24**/**26**. In alternative examples, the floor pan **80** may line only a portion of the trailer **22** where there is potential for leak or spill. Most typically, the floor pan **80** will cover a majority of the floor area of the trailer **22** or at least a majority of the first compartment **24**. In further examples, a ratio of the width of the floor pan **80** to the minimum height of the sides **80***b* is no less than 16 and may be up to about 50. In yet a further example, the cavity **80***c* of the floor pan **80** has a volume of approximately two-hundred gallons and the minimum height of the sides **80***b* is no less than two inches.

Optionally, the floor pan **80** may include one or more drain ports in the bottom **80***a*, sides **80***b*, or both, to permit controlled drainage of spilled fluid or fuel from the floor pan **80** into a catch container.

As can be appreciated from the examples herein, the station **20** permits continuous hot-refueling with enhanced reliability. While there might generally be a tendency to choose wireless sensor communication for convenience, a hard-wired approach mitigates the potential for signal interference that can arise with wireless. Moreover, by hard-wiring the sensors through the hoses to the controller, wired communication lines are protected from exposure and do not pose additional concerns for workers on a site. Additionally, the spatial layout of the station **20** permits enhanced station performance in combination with good packaging and aisle size for worker movement.

FIG. **9** illustrates a system **69** for remotely monitoring and/or managing at least one mobile distribution station **20** (A). It is to be appreciated that the system **69** may include additional mobile distribution stations, shown in phantom at **20** (B), **20** (C), and **20** (D) (collectively mobile distribution stations **20**), for example. The mobile distribution stations **20** may be located at a single work site or located across several different work sites S**1** and S**2**. Each mobile distribution station **20** is in communication with one or more servers **71** that are remotely located from the mobile distribution stations **20** and work sites S**1**/S**2**. In most implementations, the communication will be wireless.

The server **71** may include hardware, software, or both that is configured to perform the functions described herein. The server **71** may also be in communication with one or more electronic devices **73**. The electronic device **73** is external of or remote from the mobile fuel distribution stations **20**. For example, the electronic device **73** may be, but is not limited to, a computer, such as a desktop or laptop computer, a cellular device, or tablet device. The electronic device **73** may communicate and interact in the system **69** via data connectivity, which may involve internet connectivity, cellular connectivity, software, mobile application, or combinations of these.

The electronic device **73** may include a display **73***a*, such as an electronic screen, that is configured to display the fuel operating parameter data of each of the mobile distribution stations **20**. As an example, the electronic device **73** may display in real-time the operating parameter data of each of the mobile distribution stations **20** in the system **69** to permit remote monitoring and management control of the mobile distribution stations **20**. For instance, the operating parameter data may include fuel temperature, fuel pressure, fuel flow, total amount of fuel distributed, operational settings (e.g., low and high fuel level thresholds), or other parameters.

The server **71** may also be in communication with one or more cloud-based devices **75**. The cloud-based device **75** may include one or more servers and a memory for communicating with and storing information from the server **71**.

The server **71** is configured to communicate with the mobile distribution stations **20**. Most typically, the server **71** will communicate with the controller **52** of the mobile distribution station **20**. In this regard, the controller **52** of each mobile distribution station **20** may be include hardware, software, or both that is configured for external communication with the server **71**. For example, each controller **52** may communicate and interact in the system **69** via data connectivity, which may involve internet connectivity, cellular connectivity, software, mobile application, or combinations of these.

The server **71** is configured to receive operating parameter data from the mobile distribution stations **20**. The operating parameter data may include or represent physical measurements of operating conditions of the mobile distribution station **20**, status information of the mobile distribution station **20**, setting information of the mobile distribution station **20**, or other information associated with control or management of the operation of the mobile distribution station **20**.

For example, the server **71** utilizes the information to monitor and auto-manage the mobile distribution station **20**. The monitoring and auto-management may be for purposes of identifying potential risk conditions that may require shutdown or alert, purposes of intelligently enhancing operation, or purposes of reading fuel or fluid levels in real-time via the sensors **50**. As an example, the server **71**

may utilize the information to monitor or display fuel or fluid levels, or determine whether the fuel operating parameter data is within a preset limit and send a control action in response to the operating parameter data being outside the preset limit. As will described in further detail below, the control action may be a shutdown instruction to the mobile fuel distribution stations **20**, an adjustment instruction to the mobile fuel distribution stations **20**, or an alert to the electronic device **73**.

FIG. **10** illustrates a workflow logic diagram of an example control method **77** which can be implemented with the system **69** or with other configurations of one or more mobile distribution stations **20** and one or more servers. In general, the illustrated method **77** can be used to provide a shutdown instruction or an alert if operating parameter data of one or more mobile distribution stations **20** is outside of a preset limit. For instance, if fuel pressure or fuel temperature in one of the mobile distribution stations **20** exceeds one or more limits, the method **77** shuts down the mobile distribution station **20** and/or sends an alert so that appropriate action can, if needed, be taken in response to the situation. In particular, in hot-refueling implementations, the ability to automatically shut down or to provide a remote alert may facilitate enhancement of reliable and safe operation.

Referring to FIG. **10**, one or more current or instantaneous operating parameters are read (i.e., by the controller **52**). An operating parameter may include, but is not limited to, fuel temperature and fuel pressure. Other parameters may additionally or alternatively be used, such as pump speed or power and fuel flow. Parameters may be first order parameters based on first order readings from sensor signals, or second order parameters that are derived or calculated from first order parameters or first order sensor signals. For instance, temperature is a first order parameter and direct detection of temperature to produce signals representative of temperature constitute first order sensor signals. The product of temperature and pressure, for example, is a second order parameter that is based on first order sensor signals of each of temperature and pressure. As will be appreciated, there may be additional types of second order parameters based on temperature, pressure, power, flow, etc., which may or may not be weighted in a calculation of a second order parameter.

In this example, the current operating parameter is compared with a prior operating parameter stored in memory in the controller **52**. A difference in the current operating parameter and the prior operating parameter is calculated to produce a change (delta) value in the operating parameter. The change value is used as the operating parameter data for control purposes in the method **77**. The operating parameter data thus represents the change in the operating parameter from the prior reading to the current reading. Use of the change value as the operating parameter data serves to reduce the amount of data that is to be sent in connection with the method **77**. For example, the actual operating parameter values may be larger than the change values and may thus require more memory and bandwidth to send than the change values. The change values are sampled and calculated at a predesignated interval rate. In this example, the interval rate is once per second. Each operating parameter is stored in memory for use as the next "prior" operating parameter for comparison with a subsequent "new" operating parameter reading. The controller **52** may be programmed to perform the above steps. As will be appreciated, the steps above achieve data efficiency, and actual values could alternatively or additionally be used if memory and bandwidth permit.

Each operating parameter data reading (i.e., change value) is published or sent via IoT (Internet of Things) Gateway to an IoT Platform, which may be implemented fully or partially on the server **71** and cloud device **75**. The operating parameter data may also contain additional information, such as but not limited to, metadata with time stamp information and identification of the individual mobile distribution station **20**. In this example, the operating parameter data of interest is associated with fuel pressure and fuel temperature. In the method **77**, the operating parameter data for fuel temperature and fuel pressure are compared to, respectively, a preset fuel temperature shutdown limit and a preset fuel pressure shutdown limit. The shutdown limits may be temperature and pressure limits corresponding to rated limits of the pump **30**, fuel line **32**, and manifold **38**, for example.

If the temperature or pressure are outside of the preset fuel temperature or pressure shutdown limits, the method **77** initiates a shutdown event. In this example, the shutdown event includes identifying the particular mobile distribution station **20** associated with the temperature or pressure that is outside of the preset limit, forming a shutdown instruction message, and publishing or sending the shutdown instruction message via the IoT Gateway to the corresponding identified mobile distribution station **20**.

Upon receiving the shutdown instruction message, the controller **52** of the identified mobile distribution station **20** validates and executes the shutdown instruction. For instance, shutdown may include shutting off the pump **30** and closing all of the control valves **44**. In this example, the method **77** includes a timing feature that waits for confirmation of shutdown. Confirmation may be generated by the controller **52** performing an electronic check of whether the pump **30** is off and the control valves **44** are closed. Confirmation may additionally or alternatively involve manual feedback via input into the controller **52** by a worker at the identified mobile distribution station **20**.

Once shutdown is confirmed by the controller **52**, confirmation of shutdown is published or sent via the Iot Gateway to the IoT Platform for subsequent issuance of an alert. If there is no confirmation of shutdown by a maximum preset time threshold, a non-confirmation of shutdown is published or sent for subsequent issuance of an alert.

If the temperature and/or pressure is not outside of the preset fuel temperature or pressure shutdown limits, the method **77** in this example continues to determine whether the fuel temperature and fuel pressure with are, respectively, outside of a preset fuel temperature threshold limit and a preset fuel pressure threshold limit. The threshold limits will typically be preset at levels which indicate a potential for shutdown conditions. For example, the threshold limits may be intermediate temperature or pressure levels which, if exceeded, may indicate an upward trend in temperature or pressure toward the shutdown limits. In one example, the threshold limits are rate of change thresholds. For instance, a change value in temperature and/or pressure that exceeds a corresponding threshold change limit may be indicative that temperature and/or pressure is rapidly elevating toward the shutdown condition.

In response to the temperature and/or pressure being outside of the preset fuel temperature or pressure threshold limits, the method **77** initiates an alert event. In this example, the alert event includes initiating an event notification. In the event notification, the method **77** conducts a lookup of notification channels and then issues an alert via one or more selected notification channels, such as an alert on the display **73***a*. As an example, the notification channels may be

selected by user preferences and may include alerts by email, SMS (short message service), and/or mobile device app notification (e.g., banners, badges, home screen alerts, etc.). The event notification is also used for alerts of confirmation and non-confirmation of shutdown. The method **77** thus provides capability to nearly instantaneously issue an alert that can be immediately and readily viewed in real-time on the electronic device **73** so that appropriate action, if needed, can be taken. In one example, such actions may include adjustment of operation settings of the mobile distribution station **20**, which may be communicated and implemented via the system **69** from the electronic device **73** to the mobile distribution station **20**.

FIG. **11** illustrates a workflow logic diagram of an example control management method **79** which can be implemented with the method **77** and with the system **69** or with other configurations of one or more mobile distribution stations **20** and one or more servers. For example, the method **79** is used to identify shutdown conditions and/or remotely intelligently auto-manage operation of one or more mobile distribution stations **20**. The initial portion of the method **79** with respect to generating operating parameters data may be similar to the method **77**; however, the method **79** uses the operating parameter data to calculate an efficiency score and identify shutdown conditions or other actions to be taken in response to the efficiency score. For example, the efficiency score is a second order parameter and is a calculation based on multiple fuel operating parameters selected from fuel temperature, fuel pressure, fuel flow, and time. The efficiency score is then compared to an efficiency score shutdown limit. If the calculated efficiency score exceeds the limit, the method **79** initiates the shutdown event as described above. As an example, the efficiency score is the product of a safety score multiplied by one or more of a temperature score, a pressure score, a flow rate score, a tank level score, or the sum of two or more of these scores. For instance, the efficiency score is as shown in Equation I below.

Efficiency Score=Safety Score×(Temperature Score+Pressure Score+Flow Rate Score+Tank Level Score). Equation I:

In one example, the safety score is a product of a safety factor and logic values of one or zero for each of the temperature score, the pressure score, the flow rate score, and the tank level score. Thus, if any of the temperature score, the pressure score, the flow rate score, or the tank level score fails, resulting in a logic value of zero, the efficiency score will be zero. In response to an efficiency score of zero, the method **79** initiates the shutdown event as described above. The logic values are assigned according to whether the given parameter is within a predetermined minimum/maximum range. If the parameter is within the range, the logic value is one and if the parameter is outside of the range, the value is zero. As an example, the safety score may be determined by:

Safety Score=(Safety Check Positive Response/Total Safety Checks)*(IF (Temperature Reading between MIN LIMIT and MAX LIMIT) THEN 1 ELSE 0))*(IF (Pressure Reading between MIN LIMIT and MAX LIMIT) THEN 1 ELSE 0))*(IF (Flow Rate Reading between MIN LIMIT and MAX LIMIT) THEN 1 ELSE 0))*(IF (Tank Inventory Reading between MIN LIMIT and MAX LIMIT) THEN 1 ELSE 0)),

wherein

Temperature Score=(((Temperature Reading−Min Limit)/Temperature Reading)+((Max Limit+Temperature Reading)/Temperature Reading)))/2,

Pressure Score=(((Pressure Reading−Min Limit)/Pressure Reading)+((Max Limit+Pressure Reading)/Pressure Reading)))/2,

Flow Rate Score=(((Flow Rate Reading−Min Limit)/Flow Rate Reading)+((Max Limit+Flow Rate Reading)/Flow Rate Reading)))/2, and

Tank Level Score=(((Tank Level Reading−Min Limit)/Tank Level Reading)+((Max Limit+Tank Level Reading)/Tank Level Reading)))/2.

In one example, the safety factor includes a calculation based on safety checks of a mobile distribution station **20**. For instance, the safety factor is the quotient of positive or passing safety checks divided by the total number of safety check made. A safety check may involve periodic validation of multiple parameters or conditions on the site of a station **20** and/or in the station **20**. As examples, the safety check may include validation that electrical power supply is fully functional (e.g., a generator), validation of oil levels (e.g., in a generator), validation of whether there are any work obstructions at the site, etc. Thus, each safety check may involve validation of a set of parameters and conditions. If validation passes, the safety check is positive and if validation does not pass the safety check is negative. As an example, if 5 safety checks are conducted for a station **20** and four of the checks pass and one does not pass, the safety factor is equal to four divided by five, or 0.8.

The method **79** also uses the efficiency score to actively intelligently auto-manage operation of one or more of the mobile distribution stations **20**. For example, the efficiency score is compared in the method **79** with an efficiency score threshold limit or efficiency score range. If the efficiency score is outside of the limit or range, the method **79** initiates an adjustment event to adjust settings of the operating parameters of the mobile distribution station **20**. For example, pumping rate or power may be changed to increase or decrease fuel pressure. In further examples in the table below, preset actions are taken in response to efficiency scores within preset ranges.

Efficiency Score	Action
<=1	SHUTDOWN
>1 AND <=2	ALERT
>2 AND <=3	ADJUST SETTINGS
>3 AND <=4	NO ACTION

The adjustment event may include forming an adjustment instruction message and publishing or sending the adjustment instruction message to the mobile distribution station **20** via the IoT Gateway. Upon receiving the adjustment instruction message the controller **52** of the mobile distribution station **20** validates and executes the message. The message constitutes a control action to change one or more of the operating parameters to move the efficiency score within the limit or range. As an example, pumping rate is changed to change fuel pressure. Other parameters may additionally or alternatively be adjusted to change the fuel efficiency score, such as but not limited to, fuel tank upper and lower thresholds, sequence of opening/closing control valves **44**, and number of control valves **44** that may be open

at one time. Thus, once implemented, the method **79** can serve to auto-adjust operation of one or more of the mobile distribution stations **20**, without human intervention, to achieve enhanced or optimize fuel distribution.

In one example, a rate of fuel consumption of one or more pieces of the equipment may be calculated, and the upper and/or lower fuel level threshold settings are changed in response to the calculated rate of fuel consumption. For instance, if consumption is lower or higher than a given fuel level threshold setting warrants, the fuel level threshold setting is responsively auto-adjusted up or down for more efficient operation. For a low consumption rate, there may be a downward adjustment of the lower fuel level threshold, since there is lower likelihood that the low consumption rate will lead to a fully empty condition in the equipment. Similarly, for a high consumption rate, there may be an upward adjustment of the lower fuel level threshold, since there is higher likelihood that the high consumption rate will lead to a fully empty condition in the equipment. Thus, the mobile distribution station **20** can be operated more efficiently and safely by distributing fuel at proper times to ensure filling the equipment with desired safety margins.

Similar to the shutdown instruction message described above, the method **79** may include a timing feature that waits for confirmation of adjustment. Once adjustment is confirmed by the controller **52**, confirmation of adjustment is published or sent via the Iot Gateway to the IoT Platform for subsequent issuance of an alert. If there is no confirmation of adjustment by a maximum preset time threshold, a non-confirmation of adjustment is published or sent for subsequent issuance of an alert. In further examples, the method **79** may exclude use of the efficiency score for purposes of shutdown or for purposes of intelligent auto-management. That is, the method **79** may employ the efficiency score for only one or the other of shutdown or intelligent auto-management.

Additionally or alternatively, the system **69** with one or more mobile distribution stations **20** and one or more servers may be used for centralized, intelligent auto-filling. For example, fuel levels may be tracked in real-time or near real-time. When a fuel level associated with one of the stations **20** reaches the lower threshold, described above, an instruction may be sent via the system **69** to active the pump **30** and open the appropriate control valve **44**. Moreover, the system **69** can ensure that there is minimal or zero delay time from the time of identifying the low threshold to the time that filling begins. Thus, at least a portion of the functionality of the controllers **52** may be remotely and centrally based in the server of the system **69**.

Although a combination of features is shown in the illustrated examples, not all of them need to be combined to realize the benefits of various embodiments of this disclosure. In other words, a system designed according to an embodiment of this disclosure will not necessarily include all of the features shown in any one of the Figures or all of the portions schematically shown in the Figures. Moreover, selected features of one example embodiment may be combined with selected features of other example embodiments.

The preceding description is exemplary rather than limiting in nature. Variations and modifications to the disclosed examples may become apparent to those skilled in the art that do not necessarily depart from this disclosure. The scope of legal protection given to this disclosure can only be determined by studying the following claims.

What is claimed is:

1. A distribution station comprising:

a mobile trailer;

a pump on the mobile trailer;

first and second manifolds on the mobile trailer and fluidly connected with the pump;

a plurality of reels on the mobile trailer;

a plurality of hoses connected, respectively, with the reels, wherein a portion of the reels are connected with the first manifold and another portion of the reels are connected with the second manifold;

a plurality of valves on the mobile trailer, each of the valves situated between one of the first or second manifolds and a respective different one of the hoses; and

a plurality of fluid level sensors, each of the fluid level sensors being associated a respective different one of the hoses,

wherein the reels are arranged on first and second opposed sides in the mobile trailer, with an aisle walkway down the middle of the mobile trailer.

2. The distribution station as recited in claim **1**, wherein the reels on each of the first and second opposed sides are arranged in upper and lower rows of reels.

3. The distribution station as recited in claim **2**, further comprising first and second support racks on which the reels are supported, the first support rack arranged on the first side and the second support rack arranged on the second side.

4. The distribution station as recited in claim **3**, wherein the aisle walkway has an aisle width and the reels have a reel diameter, and the aisle width is greater than the reel diameter by a factor of at least 1.3.

5. The distribution station as recited in claim **4**, wherein the trailer has a trailer width of no greater than about 96 inches.

6. The distribution station as recited in claim **2**, wherein a ratio of a number of reels in the upper row to a number of reels in the lower row is 1:1.

7. The distribution station as recited in claim **1**, wherein the mobile trailer includes trailer end wall that has an outside door, an inside wall that defines first and second compartments in the mobile trailer, the outside door opening into the first compartment, and at least the manifolds and the reels are in the first compartment.

8. The distribution station as recited in claim **7**, wherein the inside wall includes an inside door providing access between the first compartment and the second compartment, the aisle walkway extending from the outside door to the inside door.

9. The distribution station as recited in claim **7**, further comprising a controller in the second compartment, the controller configured to operate the valves.

10. The distribution station as recited in claim **9**, wherein the second compartment is insulated with a fire resistant or retardant material.

11. The distribution station as recited in claim **1**, wherein the aisle walkway has an aisle width and the reels have a reel diameter, and the aisle width is greater than the reel diameter by a factor of at least 1.3.

12. The distribution station as recited in claim **11**, wherein the aisle width is greater than the reel diameter by a factor of at least 1.5.

13. The distribution station as recited in claim **1**, wherein the aisle walkway has an aisle width and the mobile trailer has a trailer width, and a ratio of the trailer width to the aisle width is no greater than 5.

14. The distribution station as recited in claim **13**, wherein the ratio of the trailer width to the aisle width is greater than 2.

15. The distribution station as recited in claim **14**, wherein the ratio of the trailer width to the aisle width is equal to or less than 4.

16. The distribution station as recited in claim **1**, further comprising a floor pan in the mobile trailer.

17. A distribution station comprising:

a mobile trailer;

a pump on the mobile trailer;

first and second manifolds on the mobile trailer and fluidly connected with the pump;

a plurality of reels on the mobile trailer;

a plurality of hoses connected, respectively, with the reels, wherein a portion of the reels are connected with the first manifold and another portion of the reels are connected with the second manifold;

a plurality of valves on the mobile trailer, each of the valves situated between one of the first or second manifolds and a respective different one of the hoses; and

a plurality of fluid level sensors, each of the fluid level sensors being associated a respective different one of the hoses,

wherein the mobile trailer includes first and second opposed trailer side walls, and a first group of the hoses are deployable from the first trailer side wall and a second group of the hoses are deployable from the second trailer side wall.

18. The distribution station as recited in claim **17**, wherein the reels are arranged on first and second opposed sides in the mobile trailer such that there is an aisle walkway down the middle of the mobile trailer.

19. The distribution station as recited in claim **18**, wherein the reels on each of the first and second opposed sides are arranged in upper and lower rows of reels.

20. The distribution station as recited in claim **19**, wherein the aisle walkway has an aisle width and the reels have a reel diameter, and the aisle width is greater than the reel diameter by a factor of at least 1.3.

21. The distribution station as recited in claim **20**, wherein the mobile trailer has a trailer width of no greater than about 96 inches.

22. The distribution station as recited in claim **17**, further comprising a floor pan in the mobile trailer.

* * * * *

Claim Charts – CORE AUTOMATED FUELING SOLUTIONS

I. US10815118B2

1. A mobile distribution station comprising:	Manticore markets the CORE Automated Fueling System ("the System") as a mobile frac fueling distribution station. (https://manticorefuels.com/services.html)
a mobile trailer; a pump on the mobile trailer; a manifold on the mobile trailer and connected with the pump;	 The System includes a mobile trailer, a pump on the mobile trailer, and a manifold on the mobile trailer and connected with the pump. CORE markets the System as including "Proprietary fuel valves that avoid clogging and spills, *enhance pump performance* and eliminate Non-Productive Time (NPT)." The System includes a manifold that is connected with the pump in order to deliver fuel to the "hose reels" shown below. (https://corefueling.com/our-solutions/automated-fueling/)
a plurality of reels on the mobile trailer; a plurality of flow passages, each said flow passage being connected to the manifold and running through a respective one of the reels; a plurality of hoses, each said hose being connected with a respective one of the flow passages via a respective one of the reels;	 The System includes a plurality of reels on the mobile trailer, a plurality of flow passages, each said flow passage being connected to the manifold and running through a respective one of the reels, a plurality of hoses, each said hose being connected with a respective one of the flow passages via a respective one of the reels. CORE markets the System as including "26+ custom-built heavy-duty

	motorized hose reels with over 450 feet of capacity, dynamic flow rate modulation and predictive fuel consumption technology." (https://corefueling.com/our-solutions/automated-fueling/)
a plurality of valves on the mobile trailer, each said valve situated between the manifold and a respective different one of the reels and being operable to control fluid flow through a respective one of the flow passages;	The System includes a plurality of valves on the mobile trailer, each said valve situated between the manifold and a respective different one of the reels and being operable to control fluid flow through a respective one of the flow passages. CORE markets the System as including "Proprietary fuel valves that avoid clogging and spills, enhance pump performance and eliminate Non-Productive Time (NPT)" and having "26+ custom-built heavy-duty motorized hose reels with over 450 feet of capacity, dynamic flow rate modulation and predictive fuel consumption technology." (https://corefueling.com/our-solutions/automated-fueling/)
a plurality of fluid level sensors, each said fluid level sensor being connected or connectable with a respective different one of the hoses; and a controller configured to operate the valves responsive to fluid level thresholds to control fluid flow to the hoses.	The System includes a plurality of fluid level sensors, each said fluid level sensor being connected or connectable with a respective different one of the hoses, and a controller configured to operate the valves responsive to fluid level thresholds to control fluid flow to the hoses. CORE markets the System as enabling users to "Remove workers from the hot zone, eliminate spills and lower risk exposure with 24/7 Command Center Monitoring." CORE also mentions "dynamic flow rate modulation and predictive fuel consumption technology" via each one of the hose reels, and "Proprietary fuel valves that avoid clogging and spills." (https://corefueling.com/our-solutions/automated-fueling/) (CORE Trademark Application)

II. US10974955B2

1. A mobile distribution station comprising:	Manticore markets the System as a mobile frac fueling distribution station. (https://manticorefuels.com/services.html)
a container including first and second opposed side walls that join first and second opposed end walls; a pump in the container;	 The System includes a container (shown above) including first and second opposed side walls that join first and second opposed end walls, and a pump in the container. CORE markets the System as including "Proprietary fuel valves that avoid clogging and spills, *enhance pump performance* and eliminate Non-Productive Time (NPT)." (https://corefueling.com/our-solutions/automated-fueling/).
first and second manifolds in the container and fluidly connected with the pump a plurality of reels in the container; a plurality of hoses, each said hose connected with a different one of the reels, wherein a portion of the reels are connected to be fed from the first manifold and another portion of the reels are connected to be fed from the second manifold;	 The System includes first and second manifolds in the container and fluidly connected with the pump, a plurality of reels in the container, and a plurality of hoses, each said hose connected with a different one of the reels, wherein a portion of the reels are connected to be fed from the first manifold and another portion of the reels are connected to be fed from the second manifold. CORE markets the system as including "26+ custom-built heavy-duty motorized hose reels with over 450 feet of capacity, dynamic flow rate modulation and predictive fuel consumption technology." Because only the hoses of the "hose reels" are visible, the reels are necessarily in the mobile trailer.

	  The "hose reels" of the System are distributable on opposed sides of the container, such that there is a first manifold connected to the pump and responsible for delivering fuel to a portion of the hose reels on a respective one of the opposed sides, and a second manifold connected to the pump and responsible for delivering fuel to another portion of the hose reels on a respective different one of the opposed sides. (https://corefueling.com/our-solutions/automated-fueling/).
a plurality of valves in the container, each said valve situated between one of the first or second manifolds and a respective different one of the reels;	The System includes a plurality of valves in the container, each said valve situated between one of the first or second manifolds and a respective different one of the reels. CORE markets the System as including "Proprietary fuel valves that avoid clogging and spills, enhance pump performance and eliminate Non-Productive Time (NPT)" and "26+ custom-built heavy-duty motorized hose reels with over 450 feet of capacity, dynamic flow rate modulation and predictive fuel consumption technology." (https://corefueling.com/our-solutions/automated-fueling/).
a plurality of fluid level sensors, each said fluid level sensor being associated with a different one of the hoses; and a controller configured to individually open and close the valves responsive to the fluid level sensors.	The System includes a plurality of fluid level sensors, each said fluid level sensor being associated with a different one of the hoses and a controller configured to individually open and close the valves responsive to the fluid level sensors. CORE markets the system as enabling users to "Remove workers from the hot zone, eliminate spills and lower risk exposure with 24/7 Command Center Monitoring." CORE also mentions "dynamic flow rate modulation and predictive fuel consumption technology" via each one of the hose reels, and "Proprietary fuel valves that avoid clogging and spills." (https://corefueling.com/our-solutions/automated-fueling/).

	 (CORE Trademark Application)

III. US9586805B1

1. A mobile distribution station comprising:	Manticore markets the system below as a mobile frac fueling distribution station. (https://manticorefuels.com/services.html)
a mobile trailer; a pump on the mobile trailer;	 The System includes a mobile trailer, and a pump on the mobile trailer. CORE markets the System as including "Proprietary fuel valves that avoid clogging and spills, *enhance pump performance* and eliminate Non-Productive Time (NPT)." (https://corefueling.com/our-solutions/automated-fueling/).
first and second manifolds on the mobile trailer and fluidly connected with the pump; a plurality of reels on the mobile trailer; a plurality of hoses connected, respectively, with the reels, wherein a portion of the reels are connected with the first manifold and another portion of the reels are connected with the second manifold;	 The system includes first and second manifolds on the mobile trailer and fluidly connected with the pump, a plurality of reels on the mobile trailer, and a plurality of hoses connected, respectively, with the reels, wherein a portion of the reels are connected with the first manifold and another portion of the reels are connected with the second manifold. CORE markets the system as including "26+ custom-built heavy-duty motorized hose reels with over 450 feet of capacity, dynamic flow rate modulation and predictive fuel consumption technology." Because only the hoses of the "hose reels" are visible, the reels are necessarily on the mobile trailer.

	  Furthermore, as shown above, the "hose reels" of the CORE system are distributable on opposed sides of the mobile trailer, such that there is a first manifold connected to the pump and responsible for delivering fuel to a portion of the hose reels on a respective one of the opposed sides, and a second manifold connected to the pump and responsible for delivering fuel to another portion of the hose reels on a respective different one of the opposed sides. (https://corefueling.com/our-solutions/automated-fueling/).
a plurality of valves on the mobile trailer, each of the valves situated between one of the first or second manifolds and a respective different one of the hoses; and	The System includes a plurality of valves on the mobile trailer, each of the valves situated between one of the first or second manifolds and a respective different one of the hoses. CORE markets the system as including "Proprietary fuel valves that avoid clogging and spills, enhance pump performance and eliminate Non-Productive Time (NPT)" and "26+ custom-built heavy-duty motorized hose reels with over 450 feet of capacity, dynamic flow rate modulation and predictive fuel consumption technology." (https://corefueling.com/our-solutions/automated-fueling/).
a plurality of fluid level sensors, each of the fluid level sensors being associated a respective different one of the hoses,	The System includes a plurality of fluid level sensors, each of the fluid level sensors being associated a respective different one of the hoses. CORE markets the system as enabling users to "Remove workers from the hot zone, eliminate spills and lower risk exposure with 24/7 Command Center Monitoring." CORE also mentions "dynamic flow rate modulation and predictive fuel consumption technology" via each one of the hose reels. (https://corefueling.com/our-solutions/automated-fueling/).

	  (CORE Trademark Application)
wherein the reels are arranged on first and second opposed sides in the mobile trailer, with an aisle walkway down the middle of the mobile trailer.	 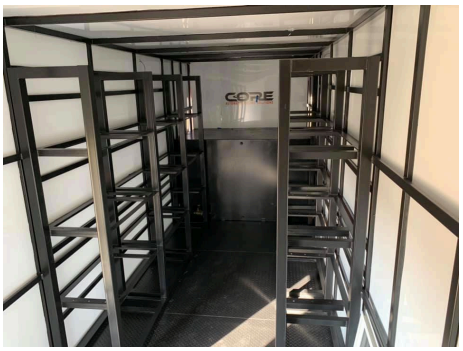 The System includes the reels are arranged on first and second opposed sides in the mobile trailer, with an aisle walkway down the middle of the mobile trailer. The System is configured to accommodate the "hose reels" on each side of the trailer such that an aisle walkway is established down the middle of the mobile trailer.

EXHIBIT 4

CORE
AUTOMATED FUELING SOLUTIONS
CORE

CORE
CORE

CORE
AUTOMATED FUELING SOLUTIONS

2020

WHY SHOULD YOU PARTNER WITH CORE?

CORE AUTOMATED FUELING SOLUTIONS

LEADER IN SAFE AND EFFICIENT AUTOMATED FRAC FUELING

CORE next generation AI-powered fueling system enables shale operators to increase stage efficiency, lower fuel cost, and deliver unprecedented levels of safety on location.

CORE AUTOMATED FUELING SOLUTIONS

CORE TECHNOLOGY FEATURES AT A GLANCE

Mobile Fueling System

- ✓ Proprietary fuel valve specifically designed to avoid fuel clogging and enhance frac pump performance
- ✓ 21,500 Gal. fully self-contained fuel storage tank with double wall design, under tank visibility and overfill protection
- ✓ 24+ custom-built and heavy-duty motorized hose reels with 400 ft capacity
- ✓ 1,500 Gal. clear fuel cell with gauge panels and reinforced seams + mobile and autonomous RTV solution for clear diesel dispensing

Analytics Dashboard

- ✓ Individual asset metering and reel level IOT sensors equipped with dynamic flow rate modulation and predictive fuel consumption technology using Machine Learning (ML)
- ✓ Online portal visibility with data points such as asset numbers, fuel consumption trend analysis, and pump and stage efficiency
- ✓ Real-time inventory management, user-configurable KPI data monitoring and custom dashboard development

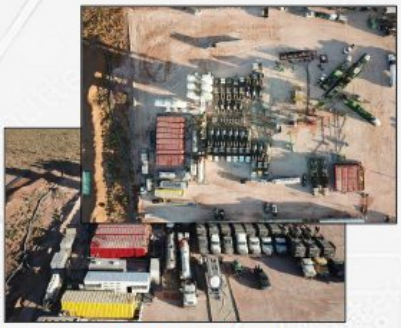

Frac Fueling Operations

- ✓ Predictive data analytics reduce pump maintenance and OPEX
- ✓ Operational efficiency and production optimization across the fleet by eliminating down-time between stages
- ✓ Minimize equipment footprint and remove workers from the "hot zone" reducing risk exposure
- ✓ Safety enhancement with 24/7 service reliability to minimize on-site hazards and eliminate spills

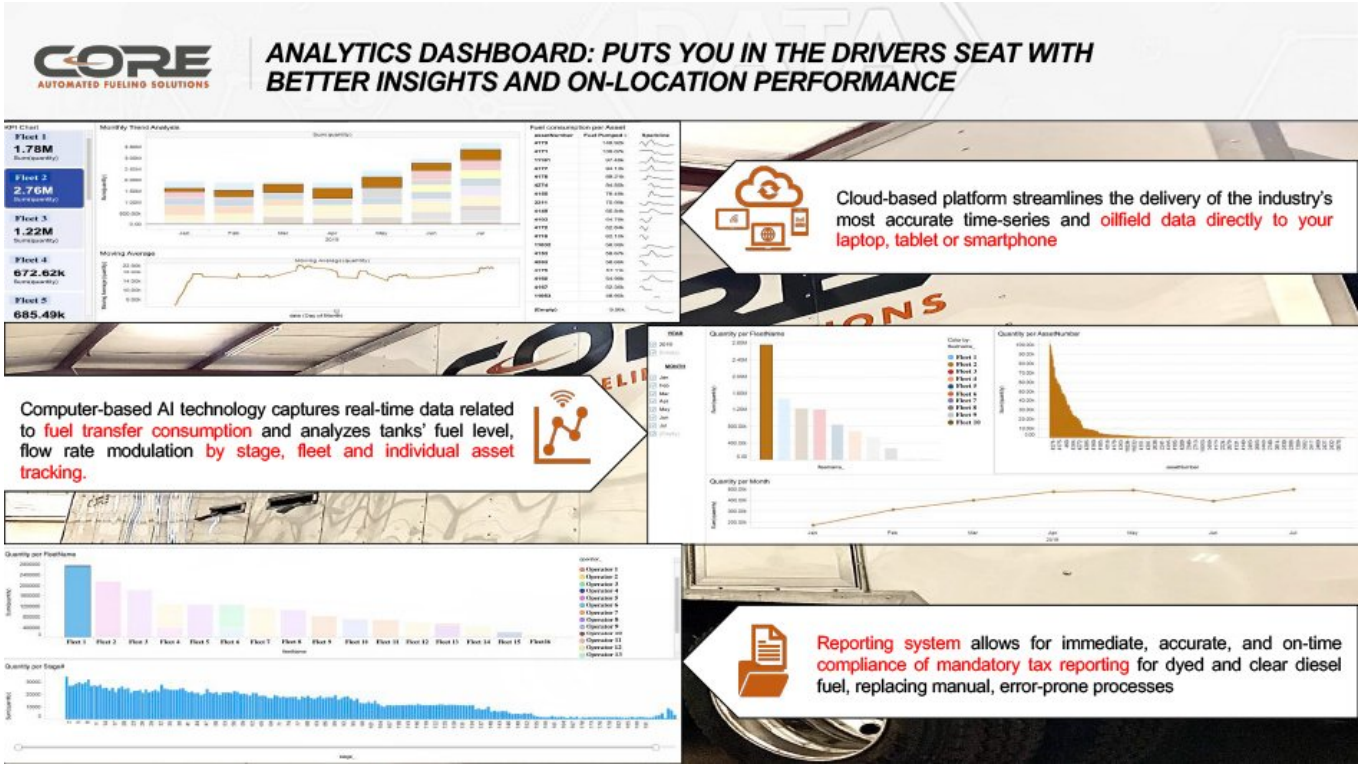
CORE
AUTOMATED FUELING SOLUTIONS
ANALYTICS DASHBOARD: PUTS YOU IN THE DRIVERS SEAT WITH BETTER INSIGHTS AND ON-LOCATION PERFORMANCE
Cloud-based platform streamlines the delivery of the industry's most accurate time-series and oilfield data directly to your laptop, tablet or smartphone
Computer-based AI technology captures real-time data related to fuel transfer consumption and analyzes tanks' fuel level, flow rate modulation by stage, fleet and individual asset tracking.
Reporting system allows for immediate, accurate, and on-time compliance of mandatory tax reporting for dyed and clear diesel fuel, replacing manual, error-prone processes

CORE AUTOMATED FUELING SOLUTIONS

KEY DIFFERENTIATION: MACHINE LEARNING

CORE uses machine learning software that learns how much fuel to pump, and at what speeds, to maintain consistent fuel levels (similar to a thermostat)

- The technology stabilizes fueling systems while tracking the consumption rate of the primary fuel source, thus removing the need for manual monitoring and error-prone fuel consumption estimates which can lead to more spills and frac downtime
- Enables operators to easily and accurately forecast refueling needs at each unique frac site, which substantially decreases the time required to refuel while increasing the supply chain visibility to efficiently manage fuel logistics with the field means:

Reduced likelihood of frac downtime due to lack of fuel or spills!

Outdated "Automation" Commonly Used

- Fluctuating fuel levels prone to spills or running pump dry due to manual errors
- Often inaccurate asset level metering
- ~16 reel/10k gallon capacity from legacy design points don't support today's multi-well, long lateral environment

CORE AI-based Fueling System

- ✓ Continuous fuel levels enable long-term planning and accurate projection of fuel needs for operators
- ✓ Substantially shortens window required for refueling and increases planning visibility for stable fuel supply

OUR VALUE PROPOSITION FOR FUELING COMPANIES

CORE
AUTOMATED FUELING SOLUTIONS

SAVE MILLIONS OF DOLLARS PER YEAR, INCREASE YOUR OPERATING MARGINS AND GROW EXPONENTIALLY WITH CORE

1. **Cut your Labor Costs by 50% which means 50% less payroll, OT, taxes, lodging & hotels, insurance and other expenses**
2. **Completely eliminate CAPEX on new equipment, recurring PM, depreciation and replacement costs**
3. **Increase Operating Margins exponentially up to 53% as you deploy new CORE systems**
4. **Save yourself and your customers costly downtime between stages**
5. **Lower equipment costs and technology differentiation gives you ample room to bid aggressively and gain new frac fleets against any competitor in the market**

OUR VALUE PROPOSITION FOR SHALE OPERATORS

CORE AUTOMATED FUELING SOLUTIONS

PROVEN TRACK RECORD SINCE INCEPTION

- We are the **"Pure Play" Fuel Automation Technology** Company, which means our main focus is that your operations are bullet-proof safe while reducing your fuel expenditures. Whereas most fuel providers build cheap and crappy systems to sell you as much fuel as they can.
- Our unique **high-quality + cost-effective** model has enabled us to build key strong relationships and grow in difficult times for our industry.
- Since Day 1 we **align to your long-term strategy and financial goals** for reciprocal sustainable growth.
- 500+ days and counting with 0 spills, 0 accidents and 0 down-time while providing 24-hour non-stop safe frac fueling. Our customer retention rate is 100% as of May 2020.
- We are the only company that manufactures and develops our systems and technology in the Permian Basin. By doing this, we support local communities and maintain a thriving Oil & Gas industry. Our HQ office, customer experience center, yard facilities and local support are located in Midland and Odessa, Texas.
- Proven to be successful and leading technology in the Permian Basin, arguably the most competitive basin in the world. Rising above some of the major multi-billion dollar fueling companies thanks to our customer commitment and product quality.
- Our team is fully executing in this down market to flexibly adapt to your needs and partner for a brighter future together.

CORE AUTOMATED FUELING SOLUTIONS

CONTACT US AND GET A LIVE DEMO!

Corporate Headquarters:
1113 Dayton Road
Midland, TX

Contact:

Ryan Burries – General Manager:
Ryan.b@corefueling.com

Website:
www.corefueling.com

Remove workers from the hot zone
Eliminate NPT and Fuel Spills
Reduce Fuel Costs and Fleet Wear & Tear
CORE
AUTOMATED FUELING SOLUTIONS
Minimize Onsite Footprint
Analyze Stage and Asset Efficiency Data
Simplify Fuel Tax Reporting & Compliance

EXHIBIT 5

US010815118B2

(12) **United States Patent**
Shock

(10) **Patent No.: US 10,815,118 B2**
(45) **Date of Patent: *Oct. 27, 2020**

(54) **MOBILE DISTRIBUTION STATION HAVING SENSOR COMMUNICATION LINES ROUTED WITH HOSES**

(71) Applicant: **Fuel Automation Station, LLC**, Birmingham, MI (US)

(72) Inventor: **Ricky Dean Shock**, Victoria, TX (US)

(73) Assignee: **FUEL AUTOMATION STATION, LLC**, Birmingham, MI (US)

(*) Notice: Subject to any disclaimer, the term of this patent is extended or adjusted under 35 U.S.C. 154(b) by 88 days.

This patent is subject to a terminal disclaimer.

(21) Appl. No.: **16/148,403**

(22) Filed: **Oct. 1, 2018**

(65) **Prior Publication Data**

US 2019/0031496 A1 Jan. 31, 2019

Related U.S. Application Data

(63) Continuation of application No. 15/290,304, filed on Oct. 11, 2016, now Pat. No. 10,087,065.

(51) **Int. Cl.**
B67D 7/04 (2010.01)
B67D 7/46 (2010.01)
(Continued)

(52) **U.S. Cl.**
CPC ***B67D 7/465*** (2013.01); ***B67D 7/04*** (2013.01); ***B67D 7/40*** (2013.01); ***B67D 7/845*** (2013.01); *B67D 2210/0006* (2013.01)

(58) **Field of Classification Search**
CPC B67D 7/465; B67D 7/40; B67D 7/845; B67D 2210/0006
(Continued)

(56) **References Cited**

U.S. PATENT DOCUMENTS

2,340,070 A 1/1944 McCauley et al.
2,516,150 A 7/1950 Samiran
(Continued)

FOREIGN PATENT DOCUMENTS

DE 1147397 4/1963
DE 20106400 10/2001
(Continued)

OTHER PUBLICATIONS

Shimazaki, H. (1986). Development of centralized fueling and management system of kerosene heating machine. Nisseki Technical Review, vol. 28(4). Jul. 1986. pp. 184-188.
(Continued)

Primary Examiner — Nicolas A Arnett
(74) *Attorney, Agent, or Firm* — Carlson, Gaskey & Olds, P.C.

(57) **ABSTRACT**

A distribution station includes a mobile trailer, a pump, a manifold connected with the pump, reels, flow passages connected to the manifold and running through the reels, hoses, connected the flow passages via the reels, valves situated between the manifold and the reels and operable to control fluid flow through the flow passages, fluid level sensors connected or connectable with the hoses, and a controller configured to operate the valves responsive to fluid level thresholds to control fluid flow to the hoses.

18 Claims, 4 Drawing Sheets

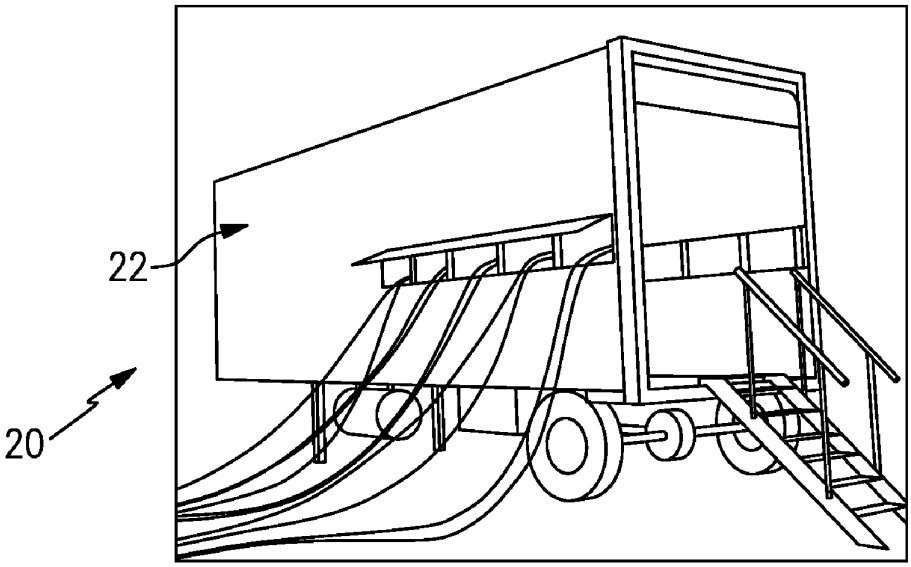

(51) **Int. Cl.**
B67D 7/40 (2010.01)
B67D 7/84 (2010.01)

(58) **Field of Classification Search**
USPC 141/94–95, 231
See application file for complete search history.

(56) **References Cited**

U.S. PATENT DOCUMENTS

2,769,572	A	11/1956	Harman et al.	
2,777,461	A	1/1957	Wildhaber	
2,966,921	A	1/1961	Whiteman	
3,028,010	A	4/1962	Headrick	
3,136,295	A	6/1964	Gramo	
3,547,141	A	12/1970	Alexander	
3,605,798	A	9/1971	Green et al.	
3,618,643	A	11/1971	Thomson	
3,625,399	A	12/1971	Heisler	
3,677,284	A	7/1972	Mendez	
3,881,509	A	5/1975	Newton	
4,139,019	A	2/1979	Bresie et al.	
4,284,210	A	8/1981	Horak	
4,511,311	A	4/1985	Olson	
4,591,115	A	5/1986	DeCarlo	
4,651,788	A	3/1987	Grosskreuz et al.	
4,728,005	A	3/1988	Jacobs et al.	
4,930,665	A	6/1990	Devine	
5,406,988	A	4/1995	Hopkins	
5,454,408	A	10/1995	DiBella et al.	
5,465,766	A	11/1995	Siegele et al.	
5,503,199	A	4/1996	Whitley, II et al.	
5,538,051	A	7/1996	Brown et al.	
5,551,309	A	9/1996	Goossens et al.	
5,651,400	A	7/1997	Corts et al.	
5,660,358	A	8/1997	Grafwallner et al.	
5,708,424	A	1/1998	Orlando et al.	
5,749,339	A	5/1998	Graham et al.	
5,887,567	A	3/1999	White	
5,927,603	A	7/1999	McNabb	
5,884,675	A	12/1999	Krasnov	
6,098,646	A	8/2000	Hennemann et al.	
6,206,056	B1	3/2001	Lagache	
6,564,615	B1	5/2003	Carter	
6,601,000	B1	7/2003	Barlian et al.	
6,651,706	B2	11/2003	Litt	
6,697,705	B2	2/2004	Johnson et al.	
6,745,801	B1	6/2004	Cohen	
6,755,225	B1	6/2004	Niedwiecki et al.	
6,761,194	B1	7/2004	Blong	
6,779,569	B1	8/2004	Teer, Jr. et al.	
6,786,245	B1	9/2004	Eichelberger et al.	
7,063,276	B2	6/2006	Newton	
7,106,026	B2	9/2006	Moore	
7,353,808	B2	4/2008	Kakoo	
7,415,995	B2	8/2008	Plummer et al.	
7,458,543	B2	12/2008	Cutler et al.	
7,568,507	B2	8/2009	Farese et al.	
7,602,143	B2	12/2009	Capizzo	
7,628,182	B2	12/2009	Poulter	
7,937,215	B2	5/2011	Humphrey	
7,938,151	B2	5/2011	Hockner	
8,069,885	B2	12/2011	Kederer	
8,448,750	B2	5/2013	Gaugush et al.	
9,346,662	B2	5/2016	Van Vliet et al.	
9,371,830	B2	6/2016	Moffitt, Jr.	
9,371,831	B2	6/2016	Moffitt, Jr.	
9,434,598	B2	9/2016	Pick	
9,586,805	B1	3/2017	Shock	
9,725,295	B2	8/2017	McKay	
9,790,080	B1 *	10/2017	Shock	B67D 7/3272
9,815,683	B1 *	11/2017	Kalala	B67D 7/362
9,981,840	B2 *	5/2018	Shock	B67D 7/465
10,087,065	B2 *	10/2018	Shock	B67D 7/465
10,150,662	B1 *	12/2018	Shock	B67D 7/74
10,196,258	B2 *	2/2019	Kalala	B67D 7/40
10,289,126	B2 *	5/2019	Shock	G05D 9/12
10,303,190	B2 *	5/2019	Shock	G05D 9/12
10,442,676	B1 *	10/2019	Walther	B65H 75/4478
10,513,426	B2 *	12/2019	Shock	B67D 7/3218
2001/0017815	A1	8/2001	Ackermann et al.	
2004/0163731	A1	8/2004	Eichelberger	
2004/0187950	A1	9/2004	Cohen	
2005/0109561	A1	5/2005	Chopra	
2007/0079891	A1	4/2007	Farese et al.	
2007/0164031	A1	7/2007	Holz	
2007/0181212	A1	8/2007	Fell	
2011/0197988	A1	8/2011	Van Vliet	
2016/0076533	A1	3/2016	Moffitt, Jr.	
2019/0119096	A1 *	4/2019	Haile	B67D 7/0401

FOREIGN PATENT DOCUMENTS

DE	10309307	9/2004
DE	102006025025	12/2006
DE	102006038652	2/2008
EP	0161042	11/1985
EP	0433041	6/2001
GB	2485832	5/2012
RU	28347	3/2003
RU	91135	1/2010
RU	2452668	1/2012
SU	949644	8/1982
WO	0177006	10/2001
WO	03029721	4/2003
WO	03093118	11/2003
WO	2006005686	1/2006
WO	2006116572	11/2006
WO	2007087849	8/2007
WO	2008083830	7/2008
WO	2009026607	3/2009
WO	20090608065	6/2009

OTHER PUBLICATIONS

Technical Document. Surface vehicle standard. SAE International. Sep. 2014. pp. 1-5.

Oilfield Business: Technologies. Frac Shack Inc. introduces world's first Bi-Fuel Distribution Unit for hydraulic fracturing industry. Texas Oil & Gas: The National Magazine for Oil & Gas in Texas. vol. 4, Issue 2. 2015. p. 27.

Frac Shack International. Publications & Endorsements. Retrieved Aug. 23, 2016 from: http://www.fracshack.com.

Frac Shack International. Technology. Retrieved Aug. 23, 2016 from: http://www.fracshack.com.

Frac Shack International. Design Benefits. Retrieved Aug. 23, 2016 from: http://www.fracshack.com.

Frac Shack International. Service. Retrieved Aug. 23, 2016 from: http://www.fracshack.com.

Frac Shack International. Frac Shack Series—Series A. Retrieved Aug. 23, 2016 from: http://www.fracshack.com.

Frac Shack International. Frac Shack Series—Series B. Retrieved Aug. 23, 2016 from: http://www.fracshack.com.

Frac Shack International. Frac Shack Series—Series C. Retrieved Aug. 23, 2016 from: http://www.fracshack.com.

Frac Shack International. Frac Shack Series—Series D. Retrieved Aug. 23, 2016 from: http://www.fracshack.com.

Frac Shack International. Frac Shack Series—Series E. Retrieved Aug. 23, 2016 from: http://www.fracshack.com.

Frac Shack International. Frac Shack Series—Series EG. Retrieved Aug. 23, 2016 from: http://www.fracshack.com.

Mann Tek. Dry Disconnect Couplings. Retrieved Jul. 22, 2016 from: http://www.manntek.com/products/drydisconnectcouplings p. 1-4.

Mann Tek. Dry Aviation Couplings. Retrieved Jul. 22, 2016 from: http://www.manntek.com/products/dryaviationcouplings p. 1-4.

Waterman, J. (2013). Better Safe than Sorry: Frac Shack a welcome addition to the oil patch. Jan. 2, 2013. Retrieved Aug. 23, 2016 from: http://www.pipelinenewsnorth.ca/better-safe-than-sorry-1.1123066.

* cited by examiner

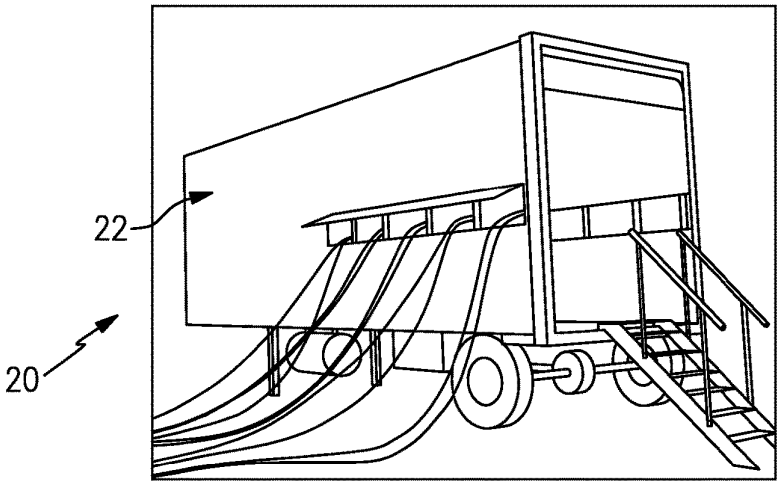
22
20

FIG.1

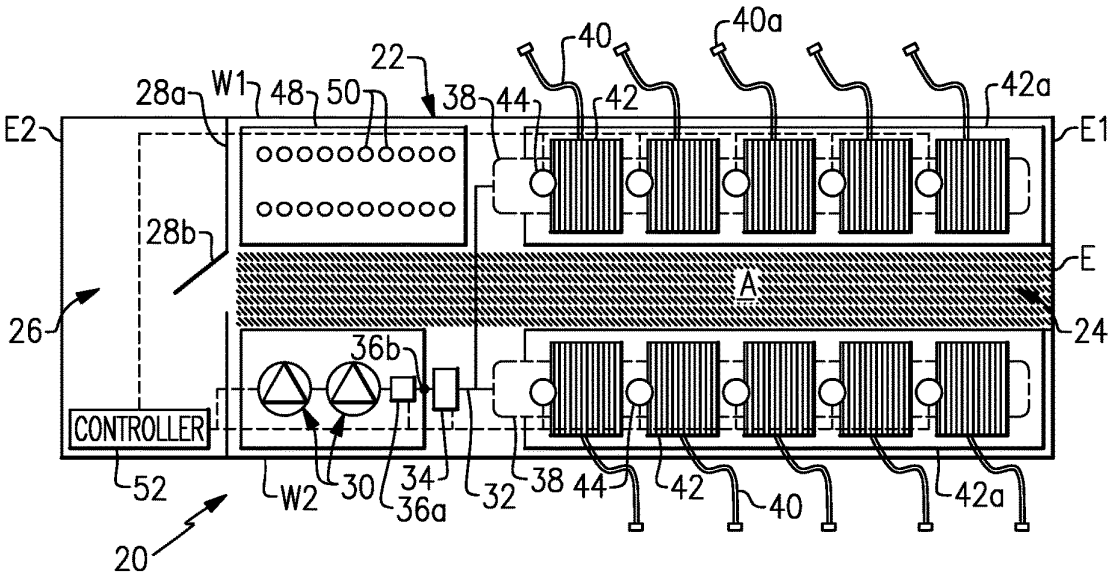
40
40a
22
28a
W1
48
50
38
44
42
42a
E2
E1
28b
E
A
26
24
36b
CONTROLLER
52
W2
30
34
36a
32
38
44
42
40
42a
20

FIG.2

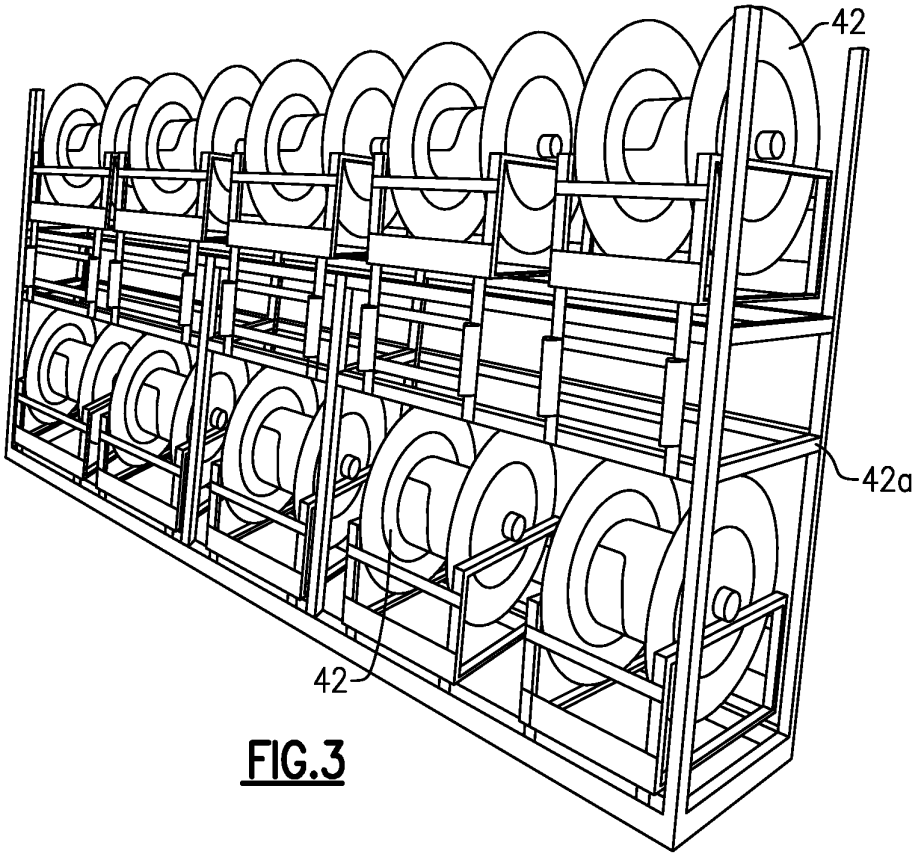

FIG.3

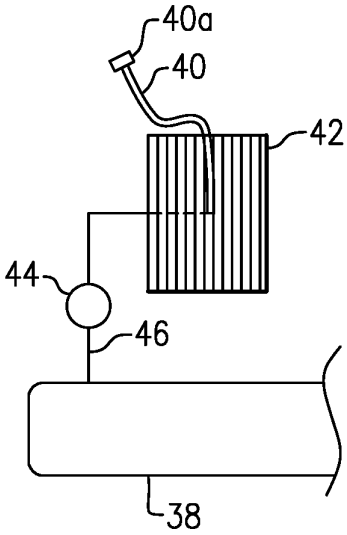

FIG.4

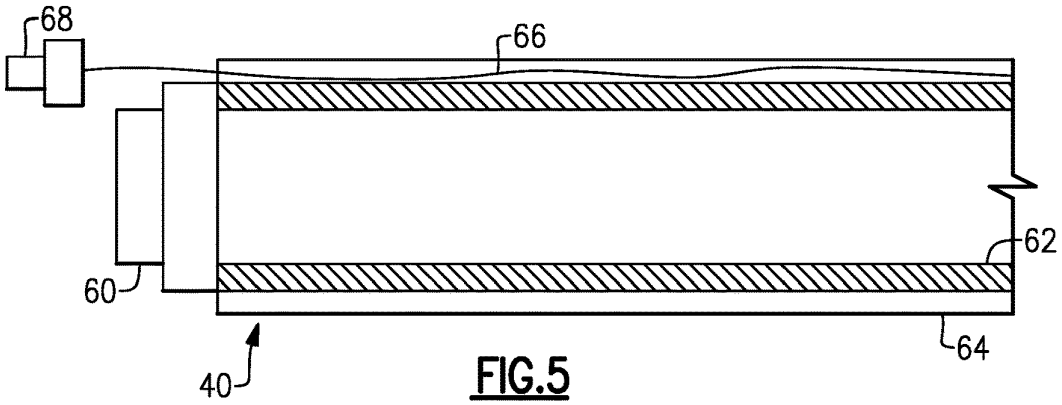

FIG.5

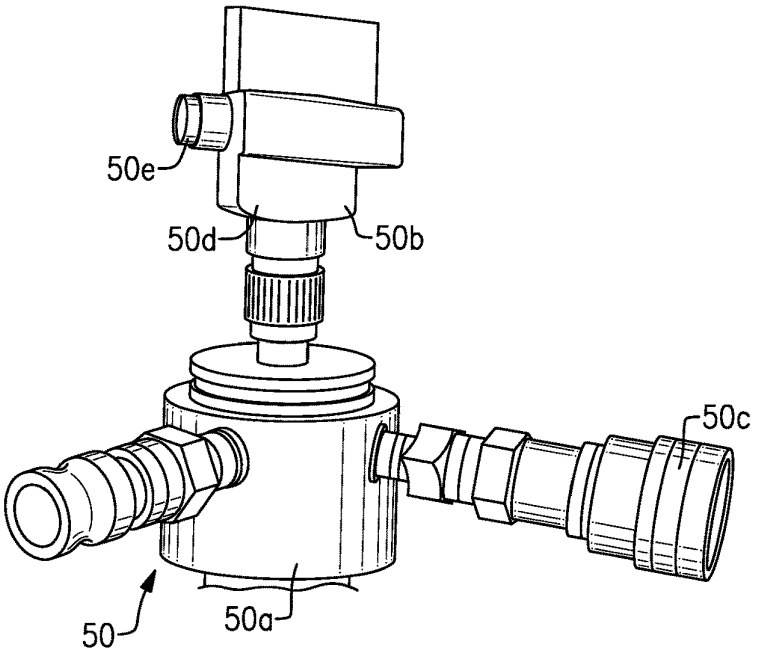

FIG.6

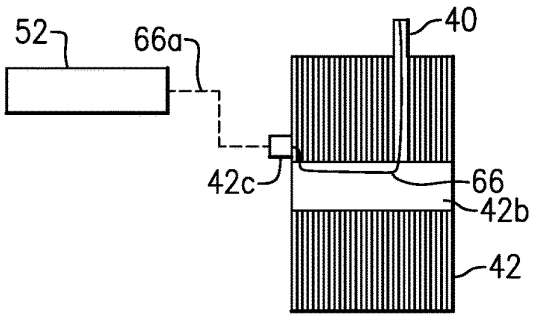

FIG.7

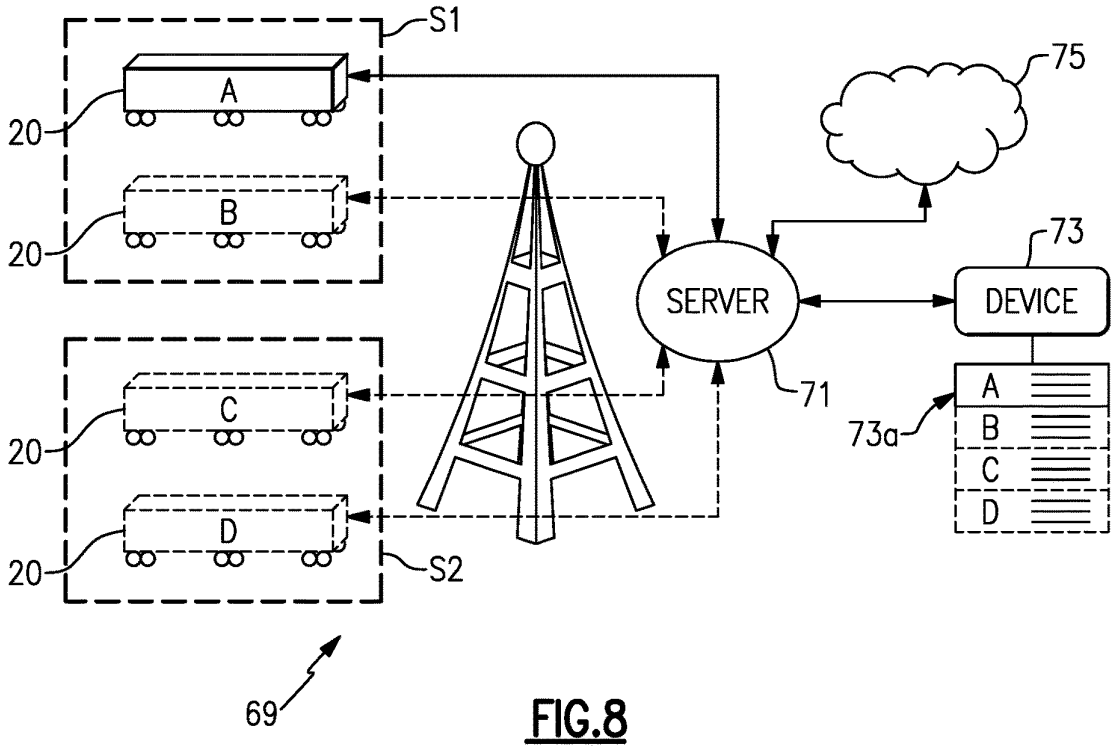

FIG.8

MOBILE DISTRIBUTION STATION HAVING SENSOR COMMUNICATION LINES ROUTED WITH HOSES

CROSS-REFERENCE TO RELATED APPLICATION

The present disclosure is a continuation of U.S. patent application Ser. No. 15/290,304 filed Oct. 11, 2016.

BACKGROUND

Hydraulic fracturing (also known as fracking) is a well-stimulation process that utilizes pressurized liquids to fracture rock formations. Pumps and other equipment used for hydraulic fracturing typically operate at the surface of the well site. The equipment may operate until refueling is needed, at which time the equipment may be shut-down for refueling. Shut-downs are costly and reduce efficiency. More preferably, to avoid shut-downs fuel is replenished in a hot-refueling operation while the equipment continues to run. This permits fracking operations to proceed continuously. However, hot-refueling can be difficult to reliably sustain for the duration of the fracking operation.

SUMMARY

A distribution station according to an example of the present disclosure includes a mobile trailer, a pump, a manifold connected with the pump, reels, flow passages connected to the manifold and running through the reels, hoses, connected the flow passages via the reels, valves situated between the manifold and the reels and operable to control fluid flow through the flow passages, fluid level sensors connected or connectable with the hoses, and a controller configured to operate the valves responsive to fluid level thresholds to control fluid flow to the hoses.

BRIEF DESCRIPTION OF THE DRAWINGS

The various features and advantages of the present disclosure will become apparent to those skilled in the art from the following detailed description. The drawings that accompany the detailed description can be briefly described as follows.

FIG. **1** illustrates an example mobile distribution station.

FIG. **2** illustrates an internal layout of a mobile distribution station.

FIG. **3** illustrates an isolated view of hose reels on a support rack used in a mobile distribution station.

FIG. **4** illustrates an example of a connection between a manifold, a control valve, and a reel.

FIG. **5** illustrates a sectioned view of an example hose for a mobile distribution station.

FIG. **6** illustrates an example of an integrated cap sensor for a mobile distribution station.

FIG. **7** illustrates an example of the routing of a sensor communication line through a reel in a mobile distribution station.

FIG. **8** illustrates a system that can be used to remotely monitor and manage one or more mobile distribution stations.

DETAILED DESCRIPTION

FIG. **1** illustrates a mobile distribution station **20** and FIG. **2** illustrates an internal layout of the station **20**. As will be

described, the station **20** may serve in a "hot-refueling" capacity to distribute fuel to multiple pieces of equipment while the equipment is running, such as fracking equipment at a well site. As will be appreciated, the station **20** is not limited to applications for fracking or for delivering fuel. The examples herein may be presented with respect to fuel delivery, but the station **20** may be used in mobile delivery of other fluids, in other gas/petroleum recovery operations, or in other operations where mobile refueling or fluid delivery will be of benefit.

In this example, the station **20** includes a mobile trailer **22**. Generally, the mobile trailer **22** is elongated and has first and second opposed trailer side walls W**1** and W**2** that join first and second opposed trailer end walls E**1** and E**2**. Most typically, the trailer **22** will also have a closed top (not shown). The mobile trailer **22** may have wheels that permit the mobile trailer **22** to be moved by a vehicle from site to site to service different hot-refueling operations. In this example, the mobile trailer **22** has two compartments. A first compartment **24** includes the physical components for distributing fuel, such as diesel fuel, and a second compartment **26** serves as an isolated control room for managing and monitoring fuel distribution. The compartments **24**/**26** are separated by an inside wall **28***a* that has an inside door **28***b*.

The first compartment **24** includes one or more pumps **30**. Fuel may be provided to the one or more pumps **30** from an external fuel source, such as a tanker truck on the site. On the trailer **22**, the one or more pumps **30** are fluidly connected via a fuel line **32** with a high precision register **34** for metering fuel. The fuel line **32** may include, but is not limited to, hard piping. In this example, the fuel line **32** includes a filtration and air eliminator system **36***a* and one or more sensors **36***b*. Although optional, the system **36***a* is beneficial in many implementations, to remove foreign particles and air from the fuel prior to delivery to the equipment. The one or more sensors **36***b* may include a temperature sensor, a pressure sensor, or a combination thereof, which assist in fuel distribution management.

The fuel line **32** is connected with one or more manifolds **38**. In the illustrated example, the station **20** includes two manifolds **38** that arranged on opposed sides of the compartment **24**. As an example, the manifolds **38** are elongated tubes that are generally larger in diameter than the fuel line **32** and that have at least one inlet and multiple outlets. Each hose **40** is wound, at least initially, on a reel **42** that is rotatable to extend or retract the hose **40** externally through one or more windows of the trailer **22**. Each reel **42** may have an associated motor to mechanically extend and retract the hose **40**.

As shown in an isolated view in FIG. **3**, the reels **42** are mounted on a support rack **42***a*. In this example, the support rack **42***a* is configured with upper and lower rows of reels **42**. Each row has five reels **42** such that each support rack **42***a* provides ten reels **42** and thus ten hoses **40**. There are two support racks **42***a* (FIG. **2**) arranged on opposed sides of the first compartment **24**, with an aisle (A) that runs between the support racks **42***a* from an outside door E to the inside door **28***b*. The station **20** therefore provides twenty hoses **40** in the illustrated arrangement, with ten hoses **40** provided on each side of the station **20**. As will be appreciated, fewer or additional reels and hoses may be used in alternative examples.

As shown in a representative example in FIG. **4**, each hose **40** is connected to a respective one of the reels **42** and a respective one of a plurality of control valves **44**. For example, a secondary fuel line **46** leads from the manifold **38** to the reel **42**. The control valve **44** is in the secondary

fuel line **46**. The control valve **44** is moveable between open and closed positions to selectively permit fuel flow from the manifold **38** to the reel **42** and the hose **40**. For example, the control valve **44** is a powered valve, such as a solenoid valve.

In the illustrated example, the first compartment **24** also includes a sensor support rack **48**. The sensor support rack **48** holds integrated fuel cap sensors **50** (when not in use), or at least portions thereof. When in use, each integrated fuel cap sensor **50** is temporarily affixed to a piece of equipment (i.e., the fuel tank of the equipment) that is subject to the hot-refueling operation. Each hose **40** may include a connector end **40***a* and each integrated fuel cap sensor **50** may have a corresponding mating connector to facilitate rapid connection and disconnection of the hose **40** with the integrated fuel cap sensor **50**. For example, the connector end **40***a* and mating connector on the integrated fuel cap sensor **50** form a hydraulic quick-connect.

At least the control valves **44**, pump or pumps **30**, sensor or sensors **36***b*, and register **34** are in communication with a controller **52** located in the second compartment **26**. As an example, the controller **52** includes software, hardware, or both that is configured to carry out any of the functions described herein. In one further example, the controller **52** includes a programmable logic controller with a touch-screen for user input and display of status data. For example, the screen may simultaneously show multiple fluid levels of the equipment that is being serviced.

When in operation, the integrated fuel cap sensors **50** are mounted on respective fuel tanks of the pieces of equipment that are subject to the hot-refueling operation. The hoses **40** are connected to the respective integrated fuel cap sensors **50**. Each integrated fuel cap sensor **50** generates signals that are indicative of the fuel level in the fuel tank of the piece of equipment on which the integrated fuel cap sensor **50** is mounted. The signals are communicated to the controller **52**.

The controller **52** interprets the signals and determines the fuel level for each fuel tank of each piece of equipment. In response to a fuel level that falls below a lower threshold, the controller **52** opens the control valve **44** associated with the hose **40** to that fuel tank and activates the pump or pumps **30**. The pump or pumps **30** provide fuel flow into the manifolds **38** and through the open control valve **44** and reel **42** such that fuel is provided through the respective hose **40** and integrated fuel cap sensor **50** into the fuel tank. The lower threshold may correspond to an empty fuel level of the fuel tank, but more typically the lower threshold will be a level above the empty level to reduce the potential that the equipment completely runs out of fuel and shuts down. The controller **52** can also be programmed with a failsafe measure related to the operation of the fuel cap sensors **50**. As an example, once a control valve **44** is open, if the controller **52** does not detect a change in fuel level from the fuel cap sensor **50** associated with the control valve **44** within a preset time period, the controller **52** shuts the pump **30** off and closes the control valve **44**. Thus, if a hose **40** were to rupture, spillage of fuel is limited to the volume of fuel in the hose **40**. For instance, the preset time period may be three seconds, six seconds, ten seconds, or fifteen seconds, which may limit spillage to approximately fifteen gallons for a given size of hose.

The controller **52** also determines when the fuel level in the fuel tank reaches an upper threshold. The upper threshold may correspond to a full fuel level of the fuel tank, but more typically the upper threshold will be a level below the full level to reduce the potential for overflow. In response to reaching the upper threshold, the controller **52** closes the respective control valve **44** and ceases the pump or pumps **30**. If other control valves **44** are open or are to be opened, the pump or pumps **30** may remain on. The controller **52** can also be programmed with an electronic stop failsafe measure to prevent over-filling. As an example, once an upper threshold is reached on a first tank and the control valve **44** is closed, but the pump **30** is otherwise to remain on to fill other tanks, if the fuel level continues to rise in the first tank, the controller **52** shuts the pump **30** off.

Multiple control valves **44** may be open at one time, to provide fuel to multiple fuel tanks at one time. Alternatively, if there is demand for fuel from two or more fuel tanks, the controller **52** may sequentially open the control valves **44** such that the tanks are refueled sequentially. For instance, upon completion of refueling of one fuel tank, the controller **52** closes the control valve **44** of the hose **40** associated with that tank and then opens the next control valve **44** to begin refueling the next fuel tank. Sequential refueling may facilitate maintaining internal pressure in the manifold and fuel line **32** above a desired or preset pressure threshold to more rapidly deliver fuel. Similarly, the controller **52** may limit the number of control valves **44** that are open at any one instance in order to maintain the internal pressure in the manifold and fuel line **32** above a desired or preset threshold. The controller **52** may perform the functions above while in an automated operating mode. Additionally, the controller **52** may have a manual mode in which a user can control at least some functions through the PLC, such as starting and stopped the pump **30** and opening and closing control valves **44**. For example, manual mode may be used at the beginning of a job when initially filling tanks to levels at which the fuel cap sensors **50** can detect fuel and/or during a job if a fuel cap sensor **50** becomes inoperable. Of course, operating in manual mode may deactivate some automated functions, such as filling at the low threshold or stopping at the high threshold.

In addition to the use of the sensor signals to determine fuel level, or even as an alternative to use of the sensor signals, the refueling may be time-based. For instance, the fuel consumption of a given piece of equipment may be known such that the fuel tank reaches the lower threshold at known time intervals. The controller **52** is operable to refuel the fuel tank at the time intervals rather than on the basis of the sensor signals, although sensor signals may also be used to verify fuel level.

The controller **52** also tracks the amount of fuel provided to the fuel tanks. For instance, the register **34** precisely measures the amount of fuel provided from the pump or pumps **30**. As an example, the register **34** is an electronic register and has a resolution of about 0.1 gallons. The register **34** communicates measurement data to the controller **52**. The controller **52** can thus determine the total amount of fuel used to very precise levels. The controller **52** may also be configured to provide outputs of the total amount of fuel consumed. For instance, a user may program the controller **52** to provide outputs at desired intervals, such as by worker shifts or daily, weekly, or monthly periods. The outputs may also be used to generate invoices for the amount of fuel used. As an example, the controller **52** may provide a daily output of fuel use and trigger the generation of an invoice that corresponds to the daily fuel use, thereby enabling almost instantaneous invoicing.

In a further example, the integrated fuel cap sensors **50** are each hard-wired to the controller **52**. The term "hard-wired" or variations thereof refers to a wired connection between two components that serves for electronic communication there between, which here is a sensor and a controller. The

hard-wiring may facilitate providing more reliable signals from the integrated fuel cap sensors **50**. For instance, the many pieces of equipment, vehicles, workers, etc. at a site may communicate using wireless devices. The wireless signals may interfere with each other and, therefore, degrade communication reliability. Hard-wiring the integrated fuel cap sensors **50** to the controller **52** facilitates reduction in interference and thus enhances reliability.

In general, hard-wiring in a hot-refueling environment presents several challenges. For example, a site has many workers walking about and typically is located on rough terrain. Thus, as will be described below, each integrated fuel cap sensor **50** is hard-wired through the associated hose **40** to the controller **52**.

FIG. **5** illustrates a representative portion of one of the hoses **40** and, specifically, the end of the hose **40** that will be located at the fuel tank of the equipment being refueled. In this example, the hose **40** includes a connector **60** at the end for detachably connecting the hose **40** to the integrated fuel cap sensors **50**. The hose **40** is formed of a tube **62** and a sleeve **64** that circumscribes the tube **62**. As an example, the tube **62** may be a flexible elastomeric tube and the sleeve **64** may be a flexible fabric sleeve. The sleeve **64** is generally loosely arranged around the tube **62**, although the sleeve **64** may closely fit on the tube **62** to prevent substantial slipping of the sleeve **64** relative to the tube **62** during use and handling. Optionally, to further prevent slipping and/or to secure the sleeve **64**, bands may be tightened around the hose **40**. As an example, one or more steel or stainless steel bands can be provided at least near the ends of the hose **40**.

A plurality of sensor communication lines **66** (one shown) are routed with or in the respective hoses **40**. For instance, each line **66** may include a wire, a wire bundle, and/or multiple wires or wire bundles. In one further example, the line **66** is a low milliamp intrinsic safety wiring, which serves as a protection feature for reducing the concern for operating electrical equipment in the presence of fuel by limiting the amount of thermal and electrical energy available for ignition. In this example, the line **66** is routed through the hose **40** between (radially) the tube **62** and the sleeve **64**. The sleeve **64** thus serves to secure and protect the line **66**, and the sleeve **64** may limit spill and spewing if there is a hose **40** rupture. In particular, since the line **66** is secured in the hose **40**, the line **66** does not present a tripping concern for workers. Moreover, in rough terrain environments where there are stones, sand, and other objects that could damage the line **66** if it were free, the sleeve **64** shields the line **66** from direct contact with such objects. In further examples, the line **66** may be embedded or partially embedded in the tube **62** or the sleeve **64**.

In this example, the line **66** extends out from the end of the hose **40** and includes a connector **68** that is detachably connectable with a respective one of the integrated fuel cap sensors **50**. For example, FIG. **6** illustrates a representative example of one of the integrated fuel cap sensors **50**. The integrated fuel cap sensor **50** includes a cap portion **50***a* and a level sensor portion **50***b*. The cap portion **50***a* is detachably connectable with a port of a fuel tank. The cap portion **50***a* includes a connector port **50***c*, which is detachably connectable with the connector **60** of the hose **40**. The sensor portion **50***b* includes a sensor **50***d* and a sensor port **50***e* that is detachably connectable with the connector **68** of the line **66**. The fuel cap sensor **50** may also include a vent port that attaches to a drain hose, to drain any overflow into a containment bucket and/or reduce air pressure build-up in a fuel tank. Thus, a user may first mount the cap portion **50***a* on the fuel tank of the equipment, followed by connecting the hose **40** to the port **50***c* and connecting the line **66** to the port **50***e*.

The sensor **50***d* may be any type of sensor that is capable of detecting fluid or fuel level in a tank. In one example, the sensor **50***d* is a guided wave radar sensor. A guided wave radar sensor may include a transmitter/sensor that emits radar waves, most typically radio frequency waves, down a probe. A sheath may be provided around the probe. For example, the sheath may be a metal alloy (e.g., stainless steel or aluminum) or polymer tube that surrounds the probe. One or more bushings may be provided between the probe and the sheth, to separate the probe from the sheath. The sheath shields the probe from contact by external objects, the walls of a fuel tank, or other components in a fuel tank, which might otherwise increase the potential for faulty sensor readings. The probe serves as a guide for the radar waves. The radar waves reflect off of the surface of the fuel and the reflected radar waves are received into the transmitter/sensor. A sensor controller determines the "time of flight" of the radar waves, i.e., how long it takes from emission of the radar waves for the radar waves to reflect back to the transmitter/sensor. Based on the time, the sensor controller, or the controller **52** if the sensor controller does not have the capability, determines the distance that the radar waves travel. A longer distance thus indicates a lower fuel level (farther away) and a shorter distance indicates a higher fuel level (closer).

The line **66** routes through the hose **40** and back to the reel **42** in the trailer **22**. For example, the line **66** is also routed or hard-wired through the reel **42** to the controller **52**. FIG. **7** illustrates a representative example of the routing in the reel **42**. In this example, the reel **42** includes a spindle **42***b* about which the reel is rotatable. The spindle **42***b* may be hollow, and the line **66** may be routed through the spindle **42***b*. The reel **42** may also include a connector **42***c* mounted thereon. The connector **42***c* receives the line **66** and serves as a port for connection with another line **66***a* to the controller **52**.

The lines **66***a* may converge to one or more communication junction blocks or "bricks" prior to the controller **52**. The communication junction blocks may serve to facilitate the relay of the signals back to the controller **52**. The communication junction blocks may alternatively or additionally serve to facilitate identification of the lines **66**, and thus the signals, with respect to which of the hoses a particular line **66** is associated with. For instance, a group of communication junction blocks may have unique identifiers and the lines **66** into a particular communication junction block may be associated with identifiers. A signal relayed into the controller **52** may thus be associated with the identifiers of the communication junction blocks and a particular line **66** of that communication junction block in order to identify which hose **40** the signal is to be associated with. The valves **44** may also communicate with the controller **52** in a similar manner through the communication junction blocks.

As can be appreciated from the examples herein, the station **20** permits continuous hot-refueling with enhanced reliability. While there might generally be a tendency to choose wireless sensor communication for convenience, a hard-wired approach mitigates the potential for signal interference that can arise with wireless. Moreover, by hard-wiring the sensors through the hoses to the controller, wired communication lines are protected from exposure and do not pose additional concerns for workers on a site.

FIG. **8** illustrates a system **69** for remotely monitoring and/or managing at least one mobile distribution station **20** (A). It is to be appreciated that the system **69** may include additional mobile distribution stations, shown in phantom at **20** (B), **20** (C), and **20** (D) (collectively mobile distribution stations **20**), for example. The mobile distribution stations **20** may be located at a single work site or located across several different work sites S**1** and S**2**. Each mobile distribution station **20** is in communication with one or more servers **71** that are remotely located from the mobile distribution stations **20** and work sites S**1**/S**2**. In most implementations, the communication will be wireless.

The server **71** may include hardware, software, or both that is configured to perform the functions described herein. The server **71** may also be in communication with one or more electronic devices **73**. The electronic device **73** is external of or remote from the mobile fuel distribution stations **20**. For example, the electronic device **73** may be, but is not limited to, a computer, such as a desktop or laptop computer, a cellular device, or tablet device. The electronic device **73** may communicate and interact in the system **69** via data connectivity, which may involve internet connectivity, cellular connectivity, software, mobile application, or combinations of these.

The electronic device **73** may include a display **73***a*, such as an electronic screen, that is configured to display the fuel operating parameter data of each of the mobile distribution stations **20**. As an example, the electronic device **73** may display in real-time the operating parameter data of each of the mobile distribution stations **20** in the system **69** to permit remote monitoring and management control of the mobile distribution stations **20**. For instance, the operating parameter data may include fuel temperature, fuel pressure, fuel flow, total amount of fuel distributed, operational settings (e.g., low and high fuel level thresholds), or other parameters.

The server **71** may also be in communication with one or more cloud-based devices **75**. The cloud-based device **75** may include one or more servers and a memory for communicating with and storing information from the server **71**.

The server **71** is configured to communicate with the mobile distribution stations **20**. Most typically, the server **71** will communicate with the controller **52** of the mobile distribution station **20**. In this regard, the controller **52** of each mobile distribution station **20** may be include hardware, software, or both that is configured for external communication with the server **71**. For example, each controller **52** may communicate and interact in the system **69** via data connectivity, which may involve internet connectivity, cellular connectivity, software, mobile application, or combinations of these.

The server **71** is configured to receive operating parameter data from the mobile distribution stations **20**. The operating parameter data may include or represent physical measurements of operating conditions of the mobile distribution station **20**, status information of the mobile distribution station **20**, setting information of the mobile distribution station **20**, or other information associated with control or management of the operation of the mobile distribution station **20**.

For example, the server **71** utilizes the information to monitor and auto-manage the mobile distribution station **20**. The monitoring and auto-management may be for purposes of identifying potential risk conditions that may require shutdown or alert, purposes of intelligently enhancing operation, or purposes of reading fuel or fluid levels in real-time via the sensors **50**. As an example, the server **71** may utilize the information to monitor or display fuel or fluid levels, or determine whether the fuel operating parameter data is within a preset limit and send a control action in response to the operating parameter data being outside the preset limit. As will described in further detail below, the control action may be a shutdown instruction to the mobile fuel distribution stations **20**, an adjustment instruction to the mobile fuel distribution stations **20**, or an alert to the electronic device **73**.

Although a combination of features is shown in the illustrated examples, not all of them need to be combined to realize the benefits of various embodiments of this disclosure. In other words, a system designed according to an embodiment of this disclosure will not necessarily include all of the features shown in any one of the Figures or all of the portions schematically shown in the Figures. Moreover, selected features of one example embodiment may be combined with selected features of other example embodiments.

The preceding description is exemplary rather than limiting in nature. Variations and modifications to the disclosed examples may become apparent to those skilled in the art that do not necessarily depart from this disclosure. The scope of legal protection given to this disclosure can only be determined by studying the following claims.

What is claimed is:

1. A distribution station comprising:

a mobile trailer;

a pump on the mobile trailer;

a manifold on the mobile trailer and connected with the pump;

a plurality of reels on the mobile trailer;

a plurality of flow passages, each said flow passage being connected to the manifold and running through a respective one of the reels;

a plurality of hoses, each said hose being connected with a respective one of the flow passages via a respective one of the reels;

a plurality of valves on the mobile trailer, each said valve situated between the manifold and a respective different one of the reels and being operable to control fluid flow through a respective one of the flow passages;

a plurality of fluid level sensors, each said fluid level sensor being connected or connectable with a respective different one of the hoses; and

a controller configured to operate the valves responsive to fluid level thresholds to control fluid flow to the hoses.

2. The distribution station as recited in claim **1**, wherein the controller is configured to determine fluid levels based on signals from the fluid level sensors and determine whether one or more of the fluid levels are below one or more of the fluid level thresholds.

3. The distribution station as recited in claim **2**, wherein the controller is configured to open the valves for which the fluid levels are below the fluid level thresholds.

4. The distribution station as recited in claim **2**, further comprising a plurality of sensor communication lines, each said sensor communication line being connected or connectable with a respective different one of the fluid level sensors, and each said sensor communication line being routed with a respective different one of the hoses.

5. The distribution station as recited in claim **4**, wherein each of the hoses includes a tube and a sleeve that circumscribes the tube, and each said sensor communication line is routed in the respective different one of the hoses between the tube and the sleeve.

6. The distribution station as recited in claim **5**, wherein each said sensor communication line is routed through a respective different one of the reels.

7. The distribution station as recited in claim **6**, further comprising a plurality of connectors, each of the connectors being mounted on a respective different one of the reels and each of the connectors receiving a respective different one of the sensor communication lines.

8. The distribution station as recited in claim **7**, wherein each of the reels includes a respective spindle, and each of the sensor communication lines is routed through a respective different one of the spindles.

9. The distribution station as recited in claim **8**, wherein controller is operable to open and close the plurality of valves responsive to a fuel level threshold.

10. A distribution station comprising:

a mobile trailer;

a pump on the mobile trailer;

a manifold on the mobile trailer and connected with the pump;

a plurality of reels on the mobile trailer;

a plurality of hoses, each said hose being connected with the manifold and each said hose including a tube and a sleeve that circumscribes the tube;

a plurality of valves on the mobile trailer, each said valve situated between the manifold and a respective different one of the hoses and being operable to control fluid flow from the manifold to the respective different one of the hoses;

a plurality of fluid level sensors, each said fluid level sensor being connected or connectable with a respective different one of the hoses; and

a controller configured to operate the valves responsive to fluid level thresholds to control fluid flow to the hoses.

11. The distribution station as recited in claim **10**, wherein the sleeve is a fabric sleeve.

12. The distribution station as recited in claim **10**, further comprising bands around the hoses, the bands securing the sleeve on the tube.

13. The distribution station as recited in claim **12**, wherein the bands are steel.

14. The distribution station as recited in claim **10**, further comprising a communication line between the sleeve and the tube.

15. A distribution station comprising:

a mobile trailer including a pump, a manifold connected with the pump, reels, flow passages connected to the manifold and running through the reels, hoses connected with the flow passages via the reels and each of the hoses including a tube and a sleeve that circumscribes the tube, valves situated between the manifold and the reels and operable to control fluid flow through the flow passages, fluid level sensors connected or connectable with the hoses, and a controller configured to operate the valves responsive fluid level thresholds to control fluid flow to the hoses.

16. The distribution station as recited in claim **15**, wherein the controller is configured to determine fluid levels based on signals from the fluid level sensors, determine whether one or more of the fluid levels are below one or more of the fluid level thresholds, and open the valves for which the fluid levels are below the fluid level thresholds.

17. The distribution station as recited in claim **16**, further comprising a plurality of sensor communication lines, each said sensor communication line being connected or connectable with a respective different one of the fluid level sensors.

18. The distribution station as recited in claim **17**, wherein each said sensor communication line is routed in the respective different one of the hoses between the tube and the sleeve.

* * * * *

EXHIBIT 6

US010974955B2

(12) **United States Patent**
Shock

(10) **Patent No.: US 10,974,955 B2**
(45) **Date of Patent: *Apr. 13, 2021**

(54) **MOBILE DISTRIBUTION STATION FOR FLUID DISPENSING**

(71) Applicant: **Fuel Automation Station, LLC**, Birmingham, MI (US)

(72) Inventor: **Ricky Dean Shock**, Victoria, TX (US)

(73) Assignee: **FUEL AUTOMATION STATION, LLC**, Birmingham, MI (US)

(*) Notice: Subject to any disclaimer, the term of this patent is extended or adjusted under 35 U.S.C. 154(b) by 0 days.

This patent is subject to a terminal disclaimer.

(21) Appl. No.: **16/700,095**

(22) Filed: **Dec. 2, 2019**

(65) **Prior Publication Data**

US 2020/0102208 A1 Apr. 2, 2020

Related U.S. Application Data

(63) Continuation of application No. 15/890,584, filed on Feb. 7, 2018, now Pat. No. 10,494,251, which is a
(Continued)

(51) **Int. Cl.**
B67D 7/04 (2010.01)
B67D 7/84 (2010.01)
(Continued)

(52) **U.S. Cl.**
CPC ***B67D 7/845*** (2013.01); ***B60P 3/035*** (2013.01); ***B62D 63/08*** (2013.01); ***B67D 7/04*** (2013.01);
(Continued)

(58) **Field of Classification Search**
CPC . B67D 7/845; B67D 7/04; B67D 7/40; B67D 7/78; B67D 7/62; B67D 7/348;
(Continued)

(56) **References Cited**

U.S. PATENT DOCUMENTS

2,340,070 A 1/1944 McCauley et al.
2,516,150 A 7/1950 Samiran
(Continued)

FOREIGN PATENT DOCUMENTS

DE 1147397 4/1963
DE 20106400 10/2001
(Continued)

OTHER PUBLICATIONS

Oilfield Business: Technologies. Frac Shack Inc. introduces world's first Bi-Fuel Distribution Unit for hydraulic fracturing industry. Texas Oil & Gas: The National Magazine for Oil & Gas in Texas. vol. 4, Issue 2. 2015. p. 27.
(Continued)

Primary Examiner — Nicolas A Arnett
(74) *Attorney, Agent, or Firm* — Carlson, Gaskey & Olds, P.C.

(57) **ABSTRACT**

A distribution station includes a container, a pump, first and second manifolds fluidly connected with the pump, reels, hoses, valves, fluid level sensors, and a controller. Each hose is connected with a different one of the reels. A portion of the reels are connected to be fed from the first manifold and another portion of the reels are connected to be fed from the second manifold. Each valve is situated between one of the first or second manifolds and a respective different one of the reels. Each fluid level sensor is associated with a different one of the hoses. The controller is configured to individually open and close the valves responsive to the fluid level sensors.

20 Claims, 5 Drawing Sheets

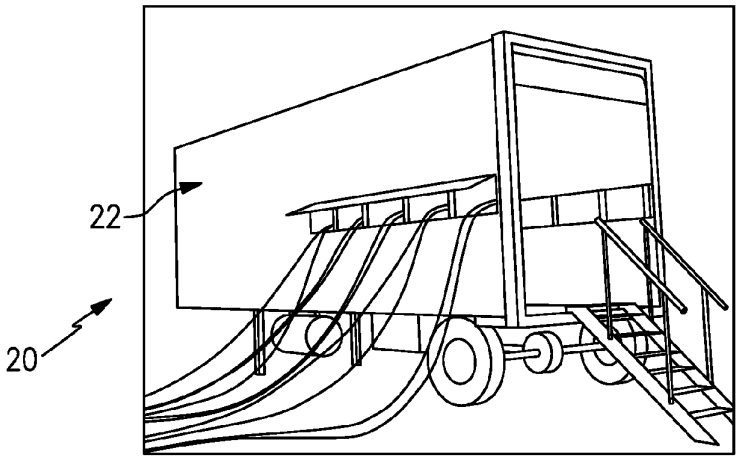

Related U.S. Application Data

continuation of application No. 15/416,198, filed on Jan. 26, 2017, now Pat. No. 9,932,220, which is a continuation of application No. 15/290,371, filed on Oct. 11, 2016, now Pat. No. 9,586,805.

(51) **Int. Cl.**

B67D 7/40	(2010.01)
B60P 3/035	(2006.01)
B67D 7/62	(2010.01)
B67D 7/78	(2010.01)
B62D 63/08	(2006.01)
E21B 43/26	(2006.01)
B67D 7/34	(2010.01)
B67D 7/14	(2010.01)

(52) **U.S. Cl.**
CPC ***B67D 7/40*** (2013.01); ***B67D 7/62*** (2013.01); ***B67D 7/78*** (2013.01); *B67D 7/145* (2013.01); *B67D 7/348* (2013.01); *E21B 43/26* (2013.01)

(58) **Field of Classification Search**
CPC B67D 7/145; B62D 63/08; B60P 3/035; E21B 43/26
See application file for complete search history.

(56) **References Cited**

U.S. PATENT DOCUMENTS

2,769,572	A	11/1956	Harman et al.
2,777,461	A	1/1957	Wildhaber
2,966,921	A	1/1961	Whiteman
3,028,010	A	4/1962	Headrick
3,136,295	A	6/1964	Gramo
3,547,141	A	12/1970	Alexander
3,605,798	A	9/1971	Green et al.
3,618,643	A	11/1971	Thomson
3,625,399	A	12/1971	Heisler
3,677,284	A	7/1972	Mendez
3,881,509	A	5/1975	Newton
4,139,019	A	2/1979	Bresie et al.
4,284,210	A	8/1981	Horak
4,511,311	A	4/1985	Olson
4,591,115	A	5/1986	DeCarlo
4,651,788	A	3/1987	Grosskreuz et al.
4,728,005	A	3/1988	Jacobs et al.
4,930,665	A	6/1990	Devine
5,406,988	A	4/1995	Hopkins
5,454,408	A	10/1995	DiBella et al.
5,465,766	A	11/1995	Siegele et al.
5,503,199	A	4/1996	Whitley, II et al.
5,538,051	A	7/1996	Brown et al.
5,551,309	A	9/1996	Goossens et al.
5,651,400	A	7/1997	Corts et al.
5,660,358	A	8/1997	Grafwallner et al.
5,708,424	A	1/1998	Orlando et al.
5,749,339	A	5/1998	Graham et al.
5,927,603	A	7/1999	McNabb
5,884,675	A	12/1999	Krasnov
6,098,646	A	8/2000	Hennemann et al.
6,206,056	B1	3/2001	Lagache
6,564,615	B1	5/2003	Carter
6,601,000	B1	7/2003	Barlian et al.
6,651,706	B2	11/2003	Litt
6,697,705	B2	2/2004	Johnson et al.
6,755,225	B1	6/2004	Niedwiecki et al.
6,761,194	B1	7/2004	Blong
6,779,569	B1	8/2004	Teer, Jr. et al.
6,786,245	B1	9/2004	Eichelberger et al.
7,063,276	B2	6/2006	Newton
7,106,026	B2	9/2006	Moore
7,353,808	B2	4/2008	Kakoo
7,415,995	B2	8/2008	Plummer et al.
7,458,543	B2	12/2008	Cutler et al.
7,568,507	B2	8/2009	Farese et al.
7,602,143	B2	12/2009	Capizzo
7,628,182	B2	12/2009	Poulter
7,937,215	B2	5/2011	Humphrey
7,938,151	B2	5/2011	Hockner
8,448,750	B2	5/2013	Gaugush et al.
9,346,662	B2	5/2016	Van Vliet et al.
9,371,830	B2	6/2016	Moffitt, Jr.
9,371,831	B2	6/2016	Moffitt, Jr.
9,586,805	B1	3/2017	Shock
9,815,683	B1 *	11/2017	Kalala B67D 7/3218
9,932,220	B1 *	4/2018	Shock B67D 7/40
9,981,840	B2 *	5/2018	Shock B67D 7/465
10,087,065	B2 *	10/2018	Shock B67D 7/845
10,150,662	B1 *	12/2018	Shock B67D 7/84
10,196,258	B2 *	2/2019	Kalala B67D 7/08
10,494,251	B2 *	12/2019	Shock B67D 7/845
10,633,243	B2 *	4/2020	Shock B65H 75/4402
10,759,649	B2 *	9/2020	Haile B67D 7/04
2001/0017815	A1	8/2001	Ackermann et al.
2005/0109561	A1	5/2005	Chopra
2007/0079891	A1	4/2007	Farese et al.
2007/0164031	A1	7/2007	Holz
2007/0181212	A1	8/2007	Fell
2016/0076533	A1	3/2016	Moffitt, Jr.

FOREIGN PATENT DOCUMENTS

DE	10309307	9/2004
DE	102006025025	12/2006
DE	102006038652	2/2008
EP	0161042	11/1985
EP	0433041	6/2001
GB	2485832	5/2012
RU	28347	3/2003
RU	91135	1/2010
RU	2452668	1/2012
SU	949644	8/1982
WO	0177006	10/2001
WO	03029721	4/2003
WO	03093118	11/2003
WO	2006005686	1/2006
WO	2006116572	11/2006
WO	2007087849	8/2007
WO	2008083830	7/2008
WO	2009026607	3/2009
WO	20090608065	6/2009

OTHER PUBLICATIONS

Frac Shack International. Publications & Endorsements. Retrieved Aug. 23, 2016 from: http://www.fracshack.com.
Frac Shack International. Technology. Retrieved Aug. 23, 2016 from: http://www.fracshack.com.
Frac Shack International. Design Benefits. Retrieved Aug. 23, 2016 from: http://www.fracshack.com.
Frac Shack International. Service. Retrieved Aug. 23, 2016 from: http://www.fracshack.com.
Frac Shack International. Frac Shack Series—Series A. Retrieved Aug. 23, 2016 from: http://www.fracshack.com.
Frac Shack International. Frac Shack Series—Series B. Retrieved Aug. 23, 2016 from: http://www.fracshack.com.
Frac Shack International. Frac Shack Series—Series C. Retrieved Aug. 23, 2016 from: http://www.fracshack.com.
Frac Shack International. Frac Shack Series—Series D. Retrieved Aug. 23, 2016 from: http://www.fracshack.com.
Frac Shack International. Frac Shack Series—Series E. Retrieved Aug. 23, 2016 from: http://www.fracshack.com.
Frac Shack International. Frac Shack Series—Series EG. Retrieved Aug. 23, 2016 from: http://www.fracshack.com.
Mann Tek. Dry Disconnect Couplings. Retrieved Jul. 22, 2016 from: http://www.manntek.com/products/drydisconnectcouplings p. 1-4.
Mann Tek. Dry Aviation Couplings. Retrieved Jul. 22, 2016 from: http://www.manntek.com/products/dryaviationcouplings p. 1-4.

(56) **References Cited**

OTHER PUBLICATIONS

Water, J. (2013). Better Safe than Sorry: Frac Shack a welcome addition to the oil patch. Jan. 2, 2013. Retrieved Aug. 23, 2016 from: http://www.pipelinenewsnorth.ca/better-safe-than-sorry-1.1123066.

Shimazaki, H. (1986). Development of centralized fueling and management system of kerosene heating machine. Nisseki Technical Review, vol. 28(4). Jul. 1986. pp. 184-188.

Technical Document. Surface vehicle standard. SAE International. Sep. 2014. pp. 1-5.

* cited by examiner

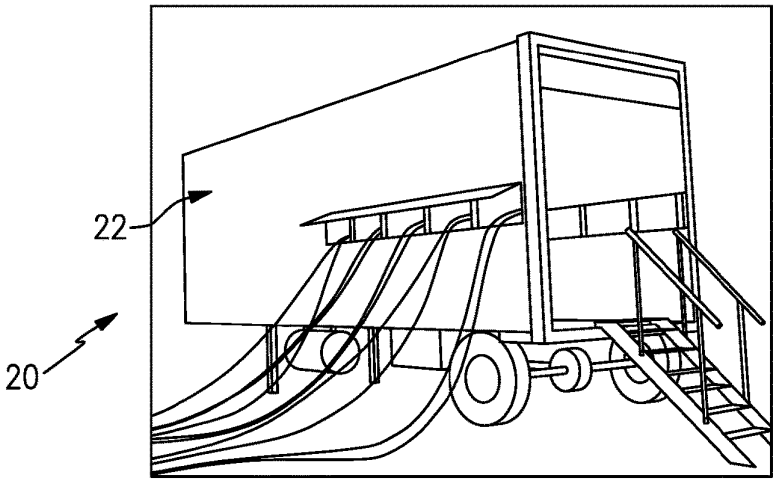
22
20

FIG.1

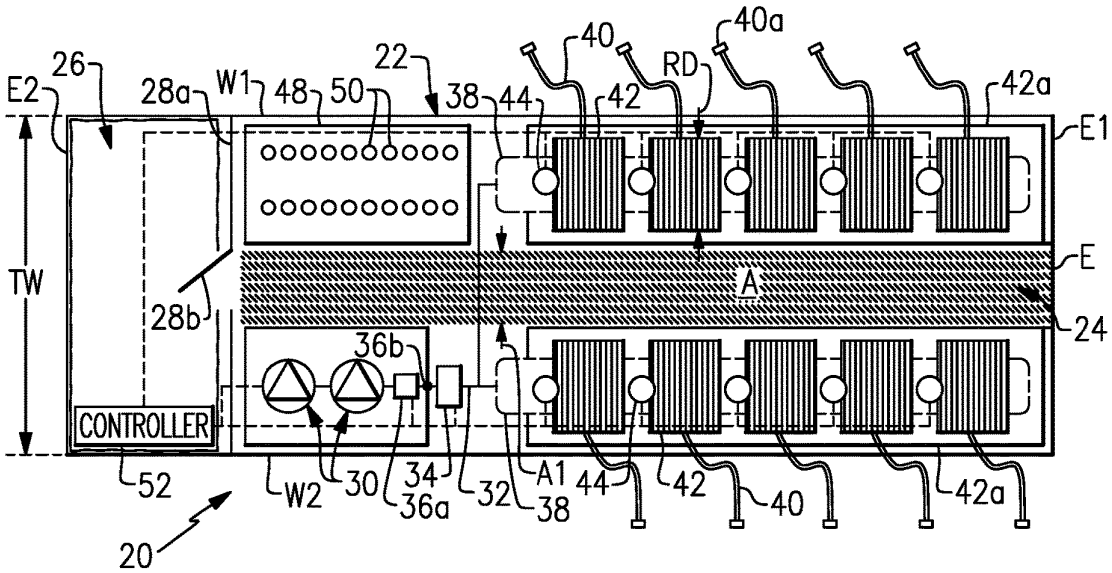
E2
26
28a
W1
48
50
22
38
44
40
42
RD
40a
42a
E1
TW
28b
A
E
24
36b
CONTROLLER
52
W2
30
34
36a
32
A1
38
44
42
40
42a
20

FIG.2

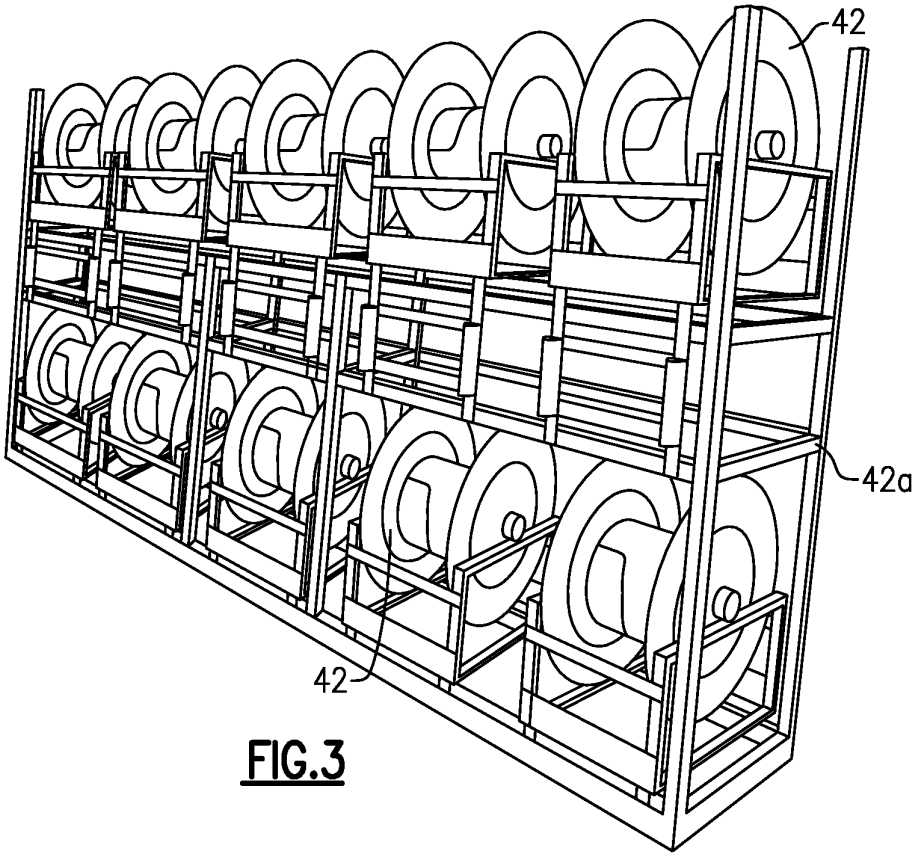

FIG.3

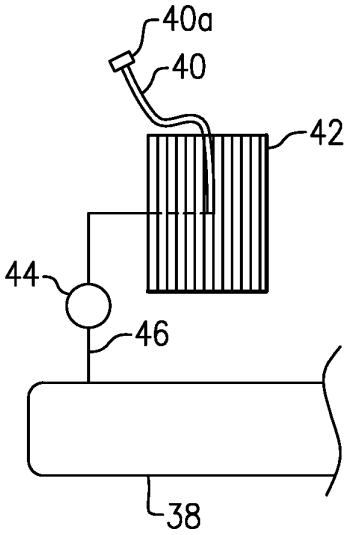

FIG.4

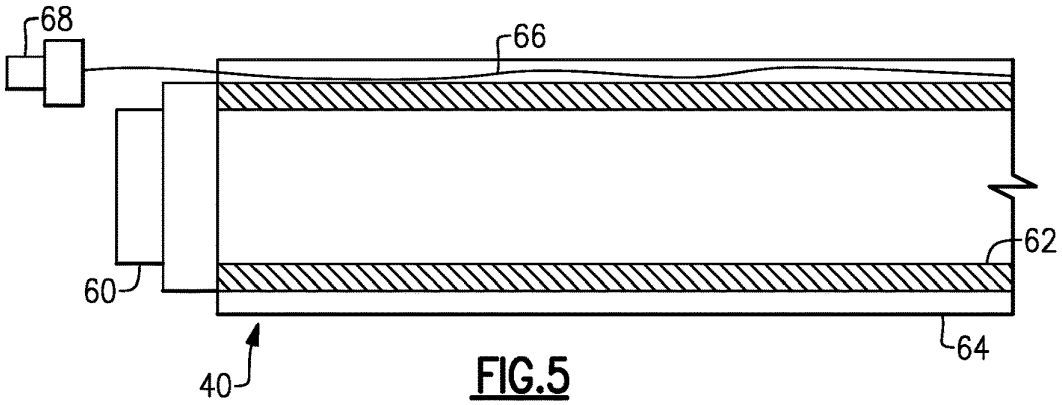

FIG.5

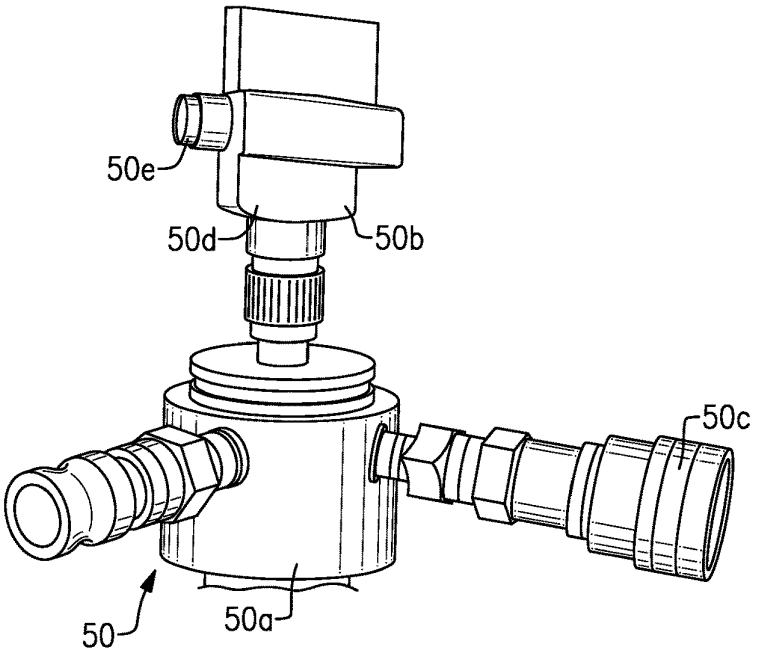

FIG.6

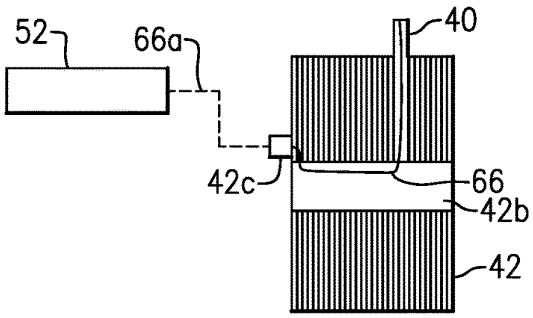

FIG.7

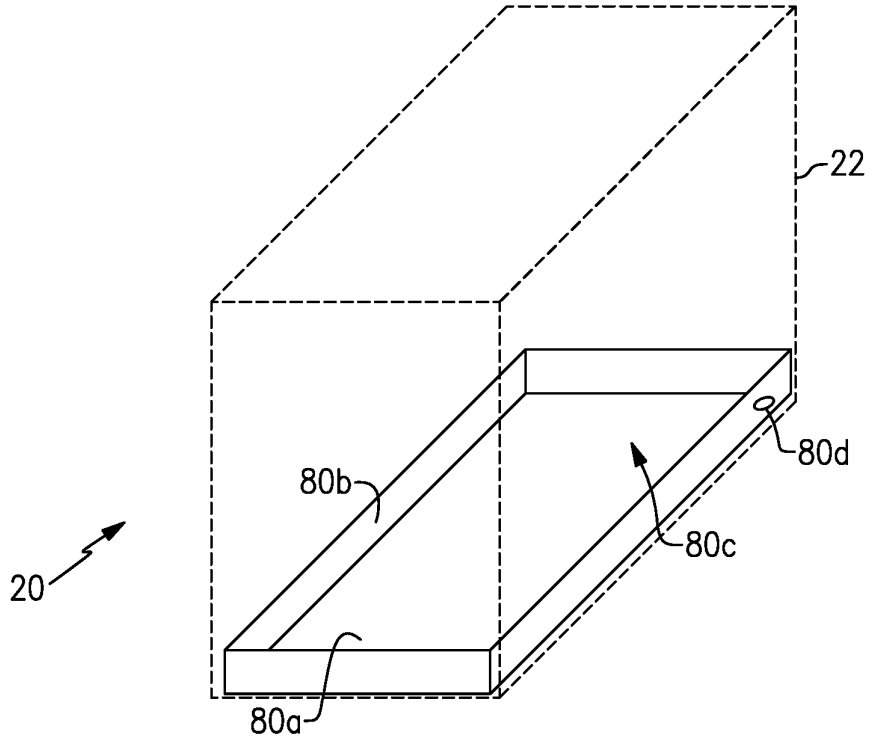

FIG.8

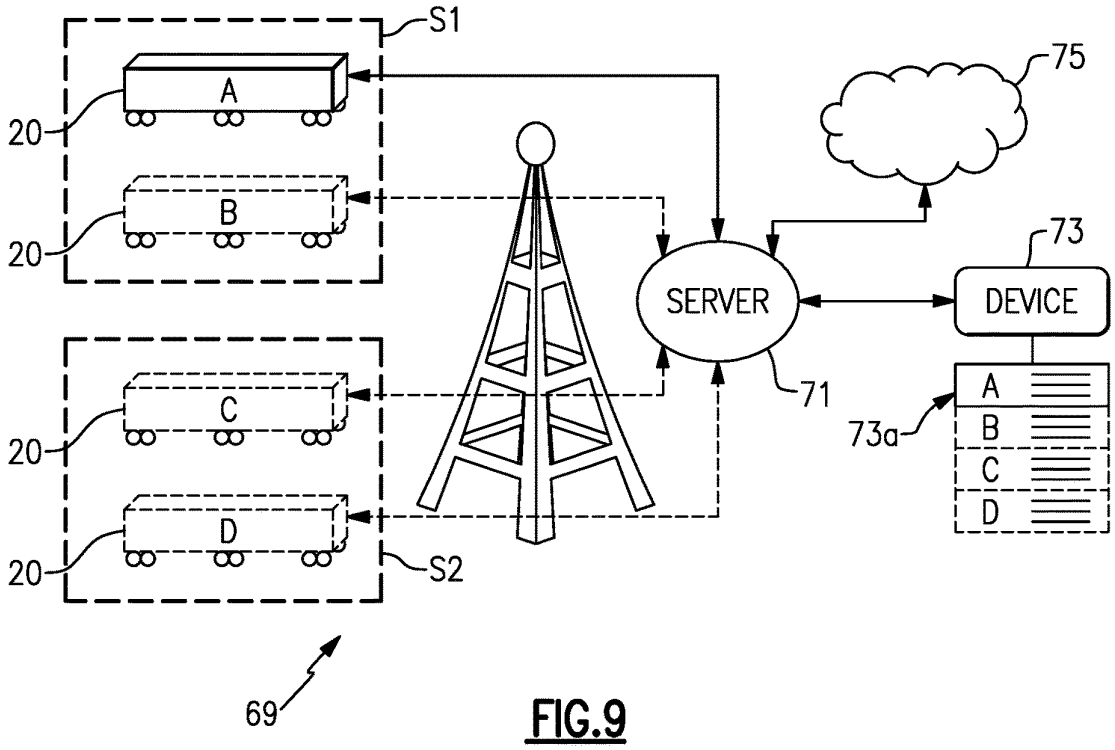

FIG.9

MOBILE DISTRIBUTION STATION FOR FLUID DISPENSING

CROSS-REFERENCE TO RELATED APPLICATION

The present disclosure is a continuation of U.S. patent application Ser. No. 15/890,584, filed Feb. 7, 2018, which is a continuation of U.S. patent application Ser. No. 15/416,198, filed Jan. 26, 2017, now issued as U.S. Pat. No. 9,932,220, which is a continuation of U.S. patent application Ser. No. 15/290,371, filed Oct. 11, 2016, which is now issued as U.S. Pat. No. 9,586,805.

BACKGROUND

Hydraulic fracturing (also known as fracking) is a well-stimulation process that utilizes pressurized liquids to fracture rock formations. Pumps and other equipment used for hydraulic fracturing typically operate at the surface of the well site. The equipment may operate semi-continuously, until refueling is needed, at which time the equipment may be shut-down for refueling. Shut-downs are costly and reduce efficiency. More preferably, to avoid shut-downs fuel is replenished in a hot-refueling operation while the equipment continues to run. This permits fracking operations to proceed fully continuously; however, hot-refueling can be difficult to reliably sustain for the duration of the fracking operation.

SUMMARY

A distribution station according to an example of the present disclosure includes a container that has first and second opposed side walls that join first and second opposed end walls, a pump, first and second manifolds fluidly connected with the pump, reels, hoses, valves, fluid level sensors, and a controller. Each hose is connected with a different one of the reels. A portion of the reels are connected to be fed from the first manifold and another portion of the reels are connected to be fed from the second manifold. Each valve is situated between one of the first or second manifolds and a respective different one of the reels. Each fluid level sensor is associated with a different one of the hoses. The controller is configured to individually open and close the valves responsive to the fluid level sensors.

BRIEF DESCRIPTION OF THE DRAWINGS

The various features and advantages of the present disclosure will become apparent to those skilled in the art from the following detailed description. The drawings that accompany the detailed description can be briefly described as follows.

FIG. **1** illustrates an example mobile distribution station.

FIG. **2** illustrates an internal layout of a mobile distribution station.

FIG. **3** illustrates an isolated view of hose reels on a support rack used in a mobile distribution station.

FIG. **4** illustrates an example of a connection between a manifold, a control valve, and a reel.

FIG. **5** illustrates a sectioned view of an example hose for a mobile distribution station.

FIG. **6** illustrates an example of an integrated fuel cap sensor for a mobile distribution station.

FIG. **7** illustrates an example of the routing of a sensor communication line through a reel in a mobile distribution station.

FIG. **8** illustrates an example of a mobile distribution station with an integrated floor pan.

FIG. **9** illustrates a system that can be used to remotely monitor and manage one or more mobile distribution stations.

DETAILED DESCRIPTION

FIG. **1** illustrates a mobile distribution station **20** and FIG. **2** illustrates an internal layout of the station **20**. As will be described, the station **20** may serve in a "hot-refueling" capacity to distribute fuel to multiple pieces of equipment while the equipment is running, such as fracking equipment at a well site. As will be appreciated, the station **20** is not limited to applications for fracking or for delivering fuel. The examples herein may be presented with respect to fuel delivery, but the station **20** may be used in mobile delivery of other fluids, in other gas/petroleum recovery operations, or in other operations where mobile refueling or fluid delivery will be of benefit.

In this example, the station **20** includes a mobile trailer **22**. Generally, the mobile trailer **22** is elongated and has first and second opposed trailer side walls W**1** and W**2** that join first and second opposed trailer end walls E**1** and E**2**. Most typically, the trailer **22** will also have a closed top (not shown). The trailer side walls W**1**/W**2** define a trailer width, TW. The mobile trailer **22** may have wheels that permit the mobile trailer **22** to be moved by a vehicle from site to site to service different hot-refueling operations.

In this example, the mobile trailer **22** has two compartments. A first compartment **24** includes the physical components for distributing fuel, such as diesel fuel, and a second compartment **26** serves as an isolated control room for managing and monitoring fuel distribution. The compartments **24**/**26** are separated by an inside wall **28***a* that has an inside door **28***b*. The second compartment **26** may be insulated with a fire resistant or retardant material **26***a*. In the event of a fire threat, a worker may take cover in the second compartment **26**. The fire resistant or retardant material **26***a* may shield the second compartment and thus temporarily protect the worker under such circumstances. The second compartment **26** may include an auxiliary escape door to provide external egress from the trailer **22**. Thus, if needed, a worker may exit the trailer **22** other than by the first compartment **24**.

The first compartment **24** includes one or more pumps **30**. Fuel may be provided to the one or more pumps **30** from an external fuel source, such as a tanker truck on the site. On the trailer **22**, the one or more pumps **30** are fluidly connected via a fuel line **32** with a high precision register **34** for metering fuel. The fuel line **32** may include, but is not limited to, hard piping. In this example, the fuel line **32** includes a filtration and air eliminator system **36***a* and one or more sensors **36***b*. Although optional, the system **36***a* is beneficial in many implementations, to remove foreign particles and air from the fuel prior to delivery to the equipment. The one or more sensors **36***b* may include a temperature sensor, a pressure sensor, or a combination thereof, which assist in fuel distribution management.

The fuel line **32** is connected with one or more manifolds **38**. In the illustrated example, the station **20** includes two manifolds **38** that arranged on opposed sides of the compartment **24**. As an example, the manifolds **38** are elongated tubes that are generally larger in diameter than the fuel line

32 and that have at least one inlet and multiple outlets. Each hose **40** is wound, at least initially, on a reel **42** that is rotatable to extend or retract the hose **40** externally through one or more windows of the trailer **22**. Each reel **42** has a reel diameter RD, which is the outside diameter or dimension of the reel **42**. Most typically, all or substantially all of the reels **42** will be the same size and thus have a common reel diameter RD. Each reel **42** may have an associated motor to mechanically extend and retract the hose **40**.

As shown in an isolated view in FIG. **3**, the reels **42** are mounted on a support rack **42***a*. In this example, the support rack **42***a* is configured with upper and lower rows of reels **42**. For instance, a ratio of the number of reels **42** in the upper row to a number of reels in the lower row on the support rack **42***a* is 1:1. As an example, each row has five reels **42** such that each support rack **42***a* provides ten reels **42** and thus ten hoses **40**. There are two support racks **42***a* (FIG. **2**) arranged on opposed sides of the first compartment **24**. The reels **42** are thus likewise arranged on opposed sides of the first compartment **24** in the trailer **22**. The station **20** therefore can provide twenty hoses **40** in the illustrated arrangement, with ten hoses **40** deployable on each side of the station **20**. For instance, the first group of ten hoses **40** on one side of the compartment **24** are deployable from the first trailer side wall W**1** and the second group of ten hoses **40** are deployable from the second trailer side wall W**2**. As will be appreciated, fewer or additional reels and hoses may be used in alternative examples.

An aisle walkway (A) runs down the middle of the trailer **22**. In this example, the aisle walkway A runs between the support racks **42***a* from an outside door E to the inside door **28***b*. Most typically, the aisle walkway A will include the space or volume through which workers walk to operate the station **20**. The aisle walkway A has an aisle width A**1**. As an example, the aisle width A**1** is the largest constant width walkway down the trailer **22** adjacent at least the reels **42** that is not intruded upon by affixed equipment in the trailer **22**, such as the reels **42**, support racks **42***a*, other support structures, etc.

The size of the aisle width A can contribute to reducing the potential for undesired incidents. For instance, there may be two or three or more workers that walk up and down the aisle walkway A in connection with their job duties. The workers need space to potentially pass by each other in the aisle walkway A and carry equipment through the aisle walkway A without bumping into each other or into equipment affixed in the trailer **22**.

The aisle width A**1**, however, is not unlimited and is subject to space availability and other factors relating to the performance of the station **20**. For instance, the reel diameter RD relates to the lengths of hoses that can be stored on the reels **42**. A relatively large reel diameter RD can accommodate a long hose winding, while a relatively smaller reel diameter RD would only accommodate a shorter hose winding. Longer hoses potentially provide greater access to equipment on a site that is located farther from the station, but longer hoses require more space in a station than shorter hoses due to the size of the reel needed to wind the longer hose. There is thus a multi-faceted interplay between the size and number of reels, arrangement of reels, and size/location of an aisle.

In a middle aisle arrangement as with the aisle walkway A, the aisle width A**1** is greater than the reel diameter RD by a factor of at least 1.3. In a further example, the aisle width A**1** is greater than the reel diameter RD by a factor of at least 1.5, and the trailer width TW is no greater than about 96 inches.

Additionally or alternatively, in a further example, a ratio of the trailer width TW to the aisle width A**1** is no greater than 5. In a further example, the ratio of the trailer width TW to the aisle width A**1** is also greater than 2. In a further example, the ratio of the trailer width TW to the aisle width A**1** is also equal to or less than 4. In a further example, the trailer width TW is no greater than about 96 inches and the ratio of the trailer width TW to the aisle width A**1** is greater than 2 and no greater than 5. In a further example of any of the examples herein, the aisle width A**1** is between about 30 inches and about 38 inches. The parameters above provide good station performance in combination with good packaging in the trailer **22** and good aisle size for worker movement.

As shown in a representative example in FIG. **4**, each hose **40** is connected to a respective one of the reels **42** and a respective one of a plurality of control valves **44**. For example, a secondary fuel line **46** leads from the manifold **38** to the reel **42**. The control valve **44** is in the secondary fuel line **46**. The control valve **44** is movable between open and closed positions to selectively permit fuel flow from the manifold **38** to the reel **42** and the hose **40**. For example, the control valve **44** is a powered valve, such as a solenoid valve.

In the illustrated example, the first compartment **24** also includes a sensor support rack **48**. The sensor support rack **48** holds integrated fuel cap sensors **50** (when not in use), or at least portions thereof. When in use, each integrated fuel cap sensor **50** is temporarily affixed to a piece of equipment (i.e., the fuel tank of the equipment) that is subject to the hot-refueling operation. Each hose **40** may include a connector end **40***a* and each integrated fuel cap sensor **50** may have a corresponding mating connector to facilitate rapid connection and disconnection of the hose **40** with the integrated fuel cap sensor **50**. For example, the connector end **40***a* and mating connector on the integrated fuel cap sensor **50** form a hydraulic quick-connect.

At least the control valves **44**, pump or pumps **30**, sensor or sensors **36***b*, and register **34** are in communication with a controller **52** located in the second compartment **26**. As an example, the controller **52** includes software, hardware, or both that is configured to carry out any of the functions described herein. In one further example, the controller **52** includes a programmable logic controller with a touch-screen for user input and display of status data. For example, the screen may simultaneously show multiple fluid levels of the equipment that is being serviced.

When in operation, the integrated fuel cap sensors **50** are mounted on respective fuel tanks of the pieces of equipment that are subject to the hot-refueling operation. The hoses **40** are connected to the respective integrated fuel cap sensors **50**. Each integrated fuel cap sensor **50** generates signals that are indicative of the fuel level in the fuel tank of the piece of equipment on which the integrated fuel cap sensor **50** is mounted. The signals are communicated to the controller **52**.

The controller **52** interprets the signals and determines the fuel level for each fuel tank of each piece of equipment. In response to a fuel level that falls below a lower threshold, the controller **52** opens the control valve **44** associated with the hose **40** to that fuel tank and activates the pump or pumps **30**. The pump or pumps **30** provide fuel flow into the manifolds **38** and through the open control valve **44** and reel **42** such that fuel is provided through the respective hose **40** and integrated fuel cap sensor **50** into the fuel tank. The lower threshold may correspond to an empty fuel level of the fuel tank, but more typically the lower threshold will be a level above the empty level to reduce the potential that the

equipment completely runs out of fuel and shuts down. The controller **52** can also be programmed with a failsafe measure related to the operation of the fuel cap sensors **50**. As an example, once a control valve **44** is open, if the controller **52** does not detect a change in fuel level from the fuel cap sensor **50** associated with the control valve **44** within a preset time period, the controller **52** shuts the pump **30** off and closes the control valve **44**. Thus, if a hose **40** were to rupture, spillage of fuel is limited to the volume of fuel in the hose **40**. For instance, the preset time period may be three seconds, six seconds, ten seconds, or fifteen seconds, which may limit spillage to approximately fifteen gallons for a given size of hose.

The controller **52** also determines when the fuel level in the fuel tank reaches an upper threshold. The upper threshold may correspond to a full fuel level of the fuel tank, but more typically the upper threshold will be a level below the full level to reduce the potential for overflow. In response to reaching the upper threshold, the controller **52** closes the respective control valve **44** and ceases the pump or pumps **30**. If other control valves **44** are open or are to be opened, the pump or pumps **30** may remain on. The controller **52** can also be programmed with an electronic stop failsafe measure to prevent over-filling. As an example, once an upper threshold is reached on a first tank and the control valve **44** is closed, but the pump **30** is otherwise to remain on to fill other tanks, if the fuel level continues to rise in the first tank, the controller **52** shuts the pump **30** off.

Multiple control valves **44** may be open at one time, to provide fuel to multiple fuel tanks at one time. Alternatively, if there is demand for fuel from two or more fuel tanks, the controller **52** may sequentially open the control valves **44** such that the tanks are refueled sequentially. For instance, upon completion of refueling of one fuel tank, the controller **52** closes the control valve **44** of the hose **40** associated with that tank and then opens the next control valve **44** to begin refueling the next fuel tank. Sequential refueling may facilitate maintaining internal pressure in the manifold and fuel line **32** above a desired or preset pressure threshold to more rapidly deliver fuel. Similarly, the controller **52** may limit the number of control valves **44** that are open at any one instance in order to maintain the internal pressure in the manifold and fuel line **32** above a desired or preset threshold. The controller **52** may perform the functions above while in an automated operating mode. Additionally, the controller **52** may have a manual mode in which a user can control at least some functions through the PLC, such as starting and stopped the pump **30** and opening and closing control valves **44**. For example, manual mode may be used at the beginning of a job when initially filling tanks to levels at which the fuel cap sensors **50** can detect fuel and/or during a job if a fuel cap sensor **50** becomes inoperable. Of course, operating in manual mode may deactivate some automated functions, such as filling at the low threshold or stopping at the high threshold.

In addition to the use of the sensor signals to determine fuel level, or even as an alternative to use of the sensor signals, the refueling may be time-based. For instance, the fuel consumption of a given piece of equipment may be known such that the fuel tank reaches the lower threshold at known time intervals. The controller **52** is operable to refuel the fuel tank at the time intervals rather than on the basis of the sensor signals, although sensor signals may also be used to verify fuel level.

The controller **52** also tracks the amount of fuel provided to the fuel tanks. For instance, the register **34** precisely measures the amount of fuel provided from the pump or pumps **30**. As an example, the register **34** is an electronic register and has a resolution of about 0.1 gallons. The register **34** communicates measurement data to the controller **52**. The controller **52** can thus determine the total amount of fuel used to very precise levels. The controller **52** may also be configured to provide outputs of the total amount of fuel consumed. For instance, a user may program the controller **52** to provide outputs at desired intervals, such as by worker shifts or daily, weekly, or monthly periods. The outputs may also be used to generate invoices for the amount of fuel used. As an example, the controller **52** may provide a daily output of fuel use and trigger the generation of an invoice that corresponds to the daily fuel use, thereby enabling almost instantaneous invoicing.

In a further example, the integrated fuel cap sensors **50** are each hard-wired to the controller **52**. The term "hard-wired" or variations thereof refers to a wired connection between two components that serves for electronic communication there between, which here a sensor and a controller. The hard-wiring may facilitate providing more reliable signals from the integrated fuel cap sensors **50**. For instance, the many pieces of equipment, vehicles, workers, etc. at a site may communicate using wireless devices. The wireless signals may interfere with each other and, therefore, degrade communication reliability. Hard-wiring the integrated fuel cap sensors **50** to the controller **52** facilitates reduction in interference and thus enhances reliability.

In general, hard-wiring in a hot-refueling environment presents several challenges. For example, a site has many workers walking about and typically is located on rough terrain. Thus, as will be described below, each integrated fuel cap sensor **50** is hard-wired through the associated hose **40** to the controller **52**.

FIG. **5** illustrates a representative portion of one of the hoses **40** and, specifically, the end of the hose **40** that will be located at the fuel tank of the equipment being refueled. In this example, the hose **40** includes a connector **60** at the end for detachably connecting the hose **40** to the integrated fuel cap sensors **50**. The hose **40** is formed of a tube **62** and a sleeve **64** that circumscribes the tube **62**. As an example, the tube **62** may be a flexible elastomeric tube and the sleeve **64** may be a flexible fabric sleeve. The sleeve **64** is generally loosely arranged around the tube **62**, although the sleeve **64** may closely fit on the tube **62** to prevent substantial slipping of the sleeve **64** relative to the tube **62** during use and handling. Optionally, to further prevent slipping and/or to secure the sleeve **64**, bands may be tightened around the hose **40**. As an example, one or more steel or stainless steel bands can be provided at least near the ends of the hose **40**.

A plurality of sensor communication lines **66** (one shown) are routed with or in the respective hoses **40**. For instance, each line **66** may include a wire, a wire bundle, and/or multiple wires or wire bundles. In one further example, the line **66** is a low milli-amp intrinsic safety wiring, which serves as a protection feature for reducing the concern for operating electrical equipment in the presence of fuel by limiting the amount of thermal and electrical energy available for ignition. In this example, the line **66** is routed through the hose **40** between (radially) the tube **62** and the sleeve **64**. The sleeve **64** thus serves to secure and protect the line **66**, and the sleeve **64** may limit spill and spewing if there is a hose **40** rupture. In particular, since the line **66** is secured in the hose **40**, the line **66** does not present a tripping concern for workers. Moreover, in rough terrain environments where there are stones, sand, and other objects that could damage the line **66** if it were free, the sleeve **64** shields the line **66** from direct contact with such objects. In further

examples, the line **66** may be embedded or partially embedded in the tube **62** or the sleeve **64**.

In this example, the line **66** extends out from the end of the hose **40** and includes a connector **68** that is detachably connectable with a respective one of the integrated fuel cap sensors **50**. For example, FIG. **6** illustrates a representative example of one of the integrated fuel cap sensors **50**. The integrated fuel cap sensor **50** includes a cap portion **50***a* and a fluid level sensor portion **50***b*. The cap portion **50***a* is detachably connectable with a port of a fuel tank. The cap portion **50***a* includes a connector port **50***c*, which is detachably connectable with the connector **60** of the hose **40**. The sensor portion **50***b* includes a sensor **50***d* and a sensor port **50***e* that is detachably connectable with the connector **68** of the line **66**. The fuel cap sensor **50** may also include a vent port that attaches to a drain hose, to drain any overflow into a containment bucket and/or reduce air pressure build-up in a fuel tank. Thus, a user may first mount the cap portion **50***a* on the fuel tank of the equipment, followed by connecting the hose **40** to the port **50***c* and connecting the line **66** to the port **50***e*.

The sensor **50***d* may be any type of sensor that is capable of detecting fluid or fuel level in a tank. In one example, the sensor **50***d* is a guided wave radar sensor. A guided wave radar sensor may include a transmitter/sensor that emits radar waves, most typically radio frequency waves, down a probe. A sheath may be provided around the probe. For example, the sheath may be a metal alloy (e.g., stainless steel or aluminum) or polymer tube that surrounds the probe. One or more bushings may be provided between the probe and the sheath, to separate the probe from the sheath. The sheath shields the probe from contact by external objects, the walls of a fuel tank, or other components in a fuel tank, which might otherwise increase the potential for faulty sensor readings. The probe serves as a guide for the radar waves. The radar waves reflect off of the surface of the fuel and the reflected radar waves are received into the transmitter/sensor. A sensor controller determines the "time of flight" of the radar waves, i.e., how long it takes from emission of the radar waves for the radar waves to reflect back to the transmitter/sensor. Based on the time, the sensor controller, or the controller **52** if the sensor controller does not have the capability, determines the distance that the radar waves travel. A longer distance thus indicates a lower fuel level (farther away) and a shorter distance indicates a higher fuel level (closer).

The line **66** routes through the hose **40** and back to the reel **42** in the trailer **22**. For example, the line **66** is also routed or hard-wired through the reel **42** to the controller **52**. FIG. **7** illustrates a representative example of the routing in the reel **42**. In this example, the reel **42** includes a spindle **42***b* about which the reel is rotatable. The spindle **42***b* may be hollow, and the line **66** may be routed through the spindle **42***b*. The reel **42** may also include a connector **42***c* mounted thereon. The connector **42***c* receives the line **66** and serves as a port for connection with another line **66***a* to the controller **52**.

The lines **66***a* may converge to one or more communication junction blocks or "bricks" prior to the controller **52**. The communication junction blocks may serve to facilitate the relay of the signals back to the controller **52**. The communication junction blocks may alternatively or additionally serve to facilitate identification of the lines **66**, and thus the signals, with respect to which of the hoses a particular line **66** is associated with. For instance, a group of communication junction blocks may have unique identifiers and the lines **66** into a particular communication junction block may be associated with identifiers. A signal relayed into the controller **52** may thus be associated with the identifier of the communication junction blocks and a particular line **66** of that communication junction block in order to identify which hose the signal is to be associated with. The valves **44** may also communicate with the controller **52** in a similar manner through the communication junction blocks.

As illustrated in a further example in FIG. **8**, the station **20** may be further enhanced to reduce the potential for fluid or fuel escape. The trailer **22**, depicted here in phantom, includes a floor pan **80**. The floor pan **80** may be formed of metal, polymer, or combinations thereof and serves to reduce or prevent the escape of fluid or fuel from inside the trailer **22**. In comparison to a temporary, movable catch basin, the floor pan **80** is a permanent fixture in the trailer **22**, and may be structurally affixed in the trailer **22** by fasteners, adhesive, or the like.

As an example, the floor pan **80** includes a bottom **80***a* that joins sides **80***b* to define a container cavity **80***c*. For instance, the floor pan **80** lines the bottom portion of the trailer **22**. The bottom **80***a* and sides **80***b* seal the container cavity **80***c* such that any fluid or fuel that leaks in the trailer **22** is caught and contained in the floor pan **80**, to reduce the potential of spilling or leaking out from the trailer **22**. The floor pan **80** may line only the first compartment **24** or may line both the first and second compartments **24**/**26**. In alternative examples, the floor pan **80** may line only a portion of the trailer **22** where there is potential for leak or spill. Most typically, the floor pan **80** will cover a majority of the floor area of the trailer **22** or at least a majority of the first compartment **24**. In further examples, a ratio of the width of the floor pan **80** to the minimum height of the sides **80***b* is no less than 16 and may be up to about 50. In yet a further example, the cavity **80***c* of the floor pan **80** has a volume of approximately two-hundred gallons and the minimum height of the sides **80***b* is no less than two inches.

Optionally, the floor pan **80** may include one or more drain ports in the bottom **80***a*, sides **80***b*, or both, to permit controlled drainage of spilled fluid or fuel from the floor pan **80** into a catch container.

As can be appreciated from the examples herein, the station **20** permits continuous hot-refueling with enhanced reliability. While there might generally be a tendency to choose wireless sensor communication for convenience, a hard-wired approach mitigates the potential for signal interference that can arise with wireless. Moreover, by hard-wiring the sensors through the hoses to the controller, wired communication lines are protected from exposure and do not pose additional concerns for workers on a site. Additionally, the spatial layout of the station **20** permits enhanced station performance in combination with good packaging and aisle size for worker movement.

FIG. **9** illustrates a system **69** for remotely monitoring and/or managing at least one mobile distribution station **20** (A). It is to be appreciated that the system **69** may include additional mobile distribution stations, shown in phantom at **20** (B), **20** (C), and **20** (D) (collectively mobile distribution stations **20**), for example. The mobile distribution stations **20** may be located at a single work site or located across several different work sites S**1** and S**2**. Each mobile distribution station **20** is in communication with one or more servers **71** that are remotely located from the mobile distribution stations **20** and work sites S**1**/S**2**. In most implementations, the communication will be wireless.

The server **71** may include hardware, software, or both that is configured to perform the functions described herein.

The server **71** may also be in communication with one or more electronic devices **73**. The electronic device **73** is external of or remote from the mobile fuel distribution stations **20**. For example, the electronic device **73** may be, but is not limited to, a computer, such as a desktop or laptop computer, a cellular device, or tablet device. The electronic device **73** may communicate and interact in the system **69** via data connectivity, which may involve internet connectivity, cellular connectivity, software, mobile application, or combinations of these.

The electronic device **73** may include a display **73***a,* such as an electronic screen, that is configured to display the fuel operating parameter data of each of the mobile distribution stations **20**. As an example, the electronic device **73** may display in real-time the operating parameter data of each of the mobile distribution stations **20** in the system **69** to permit remote monitoring and management control of the mobile distribution stations **20**. For instance, the operating parameter data may include fuel temperature, fuel pressure, fuel flow, total amount of fuel distributed, operational settings (e.g., low and high fuel level thresholds), or other parameters.

The server **71** may also be in communication with one or more cloud-based devices **75**. The cloud-based device **75** may include one or more servers and a memory for communicating with and storing information from the server **71**.

The server **71** is configured to communicate with the mobile distribution stations **20**. Most typically, the server **71** will communicate with the controller **52** of the mobile distribution station **20**. In this regard, the controller **52** of each mobile distribution station **20** may be include hardware, software, or both that is configured for external communication with the server **71**. For example, each controller **52** may communicate and interact in the system **69** via data connectivity, which may involve internet connectivity, cellular connectivity, software, mobile application, or combinations of these.

The server **71** is configured to receive operating parameter data from the mobile distribution stations **20**. The operating parameter data may include or represent physical measurements of operating conditions of the mobile distribution station **20**, status information of the mobile distribution station **20**, setting information of the mobile distribution station **20**, or other information associated with control or management of the operation of the mobile distribution station **20**.

For example, the server **71** utilizes the information to monitor and auto-manage the mobile distribution station **20**. The monitoring and auto-management may be for purposes of identifying potential risk conditions that may require shutdown or alert, purposes of intelligently enhancing operation, or purposes of reading fuel or fluid levels in real-time via the sensors **50**. As an example, the server **71** may utilize the information to monitor or display fuel or fluid levels, or determine whether the fuel operating parameter data is within a preset limit and send a control action in response to the operating parameter data being outside the preset limit. As will described in further detail below, the control action may be a shutdown instruction to the mobile fuel distribution stations **20**, an adjustment instruction to the mobile fuel distribution stations **20**, or an alert to the electronic device **73**.

Although a combination of features is shown in the illustrated examples, not all of them need to be combined to realize the benefits of various embodiments of this disclosure. In other words, a system designed according to an embodiment of this disclosure will not necessarily include all of the features shown in any one of the Figures or all of the portions schematically shown in the Figures. Moreover, selected features of one example embodiment may be combined with selected features of other example embodiments.

The preceding description is exemplary rather than limiting in nature. Variations and modifications to the disclosed examples may become apparent to those skilled in the art that do not necessarily depart from this disclosure. The scope of legal protection given to this disclosure can only be determined by studying the following claims.

What is claimed is:

1. A distribution station comprising:

a container including first and second opposed side walls that join first and second opposed end walls;

a pump in the container;

first and second manifolds in the container and fluidly connected with the pump;

a plurality of reels in the container;

a plurality of hoses, each said hose connected with a different one of the reels, wherein a portion of the reels are connected to be fed from the first manifold and another portion of the reels are connected to be fed from the second manifold;

a plurality of valves in the container, each said valve situated between one of the first or second manifolds and a respective different one of the reels;

a plurality of fluid level sensors, each said fluid level sensor being associated with a different one of the hoses; and

a controller configured to individually open and close the valves responsive to the fluid level sensors.

2. The distribution station as recited in claim **1**, wherein the reels are arranged on first and second opposed sides in the container.

3. The distribution station as recited in claim **2**, further comprising an aisle walkway down the middle of the container between the reels on the first and second opposed sides in the container.

4. The distribution station as recited in claim **3**, further comprising a floor pan in the container.

5. The distribution station as recited in claim **1**, wherein the reels on each of the first and second opposed sides are arranged in upper and lower rows of reels.

6. The distribution station as recited in claim **1**, further comprising a register configured to measure an amount of fluid from the pump.

7. The distribution station as recited in claim **6**, wherein the register is in communication with the controller.

8. The distribution station as recited in claim **7**, wherein the controller is configured to track the amount of fluid provided from the pump over a selected time interval.

9. The distribution station as recited in claim **8**, wherein the controller is configured to trigger generation of an invoice for the amount of fluid.

10. The distribution station as recited in claim **8**, wherein the register is an electronic register that has a resolution of about 0.1 gallons.

11. A distribution station comprising:

a container including first and second opposed side walls that join first and second opposed end walls;

at least one pump in the container;

at least one manifold in the container and fluidly connected with the at least one pump;

a plurality of reels in the container, each said reel individually connected with the at least one manifold;

a plurality of hoses, each said hose connected with a different one of the reels;

a plurality of valves in the container, each said valve situated between the at least one manifold and a respective different one of the reels;

a plurality of fluid level sensors, each said fluid level sensor connectable to an end of a different one of the hoses; and

a controller configured to individually open and close the valves responsive to the fluid level sensors.

12. The distribution station as recited in claim **11**, wherein the at least one pump includes two pumps.

13. The distribution station as recited in claim **12**, wherein the two pumps are arranged in fluid series.

14. The distribution station as recited in claim **11**, further comprising a register configured to measure an amount of fluid from the pump.

15. The distribution station as recited in claim **14**, wherein the register is in communication with the controller.

16. The distribution station as recited in claim **15**, wherein the controller is configured to track the amount of fluid provided from the pump over a selected time interval.

17. The distribution station as recited in claim **16**, wherein the controller is configured to trigger generation of an invoice for the amount of fluid.

18. The distribution station as recited in claim **16**, wherein the register is an electronic register that has a resolution of about 0.1 gallons.

19. A distribution station comprising:

a container including first and second opposed side walls that join first and second opposed end walls;

at least one pump in the container;

at least one manifold in the container and fluidly connected with the at least one pump;

a register between the at least one pump and the at least one manifold;

a plurality of reels in the container and connected with the at least one manifold;

a plurality of hoses, each said hose connected with a different one of the reels;

a plurality of valves in the container, each said valve situated between the at least one manifold and a respective different one of the reels;

a plurality of fluid level sensors, each said fluid level sensor being associated with a different one of the hoses; and

a controller configured to individually open and close the valves responsive to the fluid level sensors.

20. The distribution station as recited in claim **19**, wherein the register is configured to generate measurement data representative of an amount of fluid provided from the at least one pump, and the register is in communication with the controller to send the measurement data to the controller.

* * * * *

EXHIBIT 7

US009586805B1

(12) **United States Patent**
Shock

(10) **Patent No.: US 9,586,805 B1**
(45) **Date of Patent: Mar. 7, 2017**

(54) **MOBILE DISTRIBUTION STATION WITH AISLE WALKWAY**

(71) Applicant: **Fuel Automation Station, LLC**, Birmingham, MI (US)

(72) Inventor: **Ricky Dean Shock**, Victoria, TX (US)

(73) Assignee: **FUEL AUTOMATION STATION, LLC**, Birmingham, MI (US)

(*) Notice: Subject to any disclaimer, the term of this patent is extended or adjusted under 35 U.S.C. 154(b) by 0 days.

(21) Appl. No.: **15/290,371**

(22) Filed: **Oct. 11, 2016**

(51) **Int. Cl.**

B65B 37/00	(2006.01)
B67D 7/40	(2010.01)
B62D 63/08	(2006.01)
B60P 3/035	(2006.01)
B60P 3/00	(2006.01)
B67D 7/62	(2010.01)
B67D 7/78	(2010.01)
B67D 7/84	(2010.01)
E21B 43/26	(2006.01)

(52) **U.S. Cl.**
CPC ***B67D 7/40*** (2013.01); ***B60P 3/00*** (2013.01); ***B60P 3/035*** (2013.01); ***B62D 63/08*** (2013.01); ***B67D 7/62*** (2013.01); ***B67D 7/78*** (2013.01); ***B67D 7/845*** (2013.01); *E21B 43/26* (2013.01)

(58) **Field of Classification Search**
CPC ... B67D 7/38; B67D 7/84; B67D 7/40; B67D 7/845; B67D 7/465; B67D 7/3218; B67D 7/36; B60P 3/065
See application file for complete search history.

(56) **References Cited**

U.S. PATENT DOCUMENTS

2,516,150	A	7/1950	Samiran
2,769,572	A	11/1956	Harman et al.

(Continued)

FOREIGN PATENT DOCUMENTS

GB	2485832	5/2012
WO	0177006	10/2001

(Continued)

OTHER PUBLICATIONS

Oilfield Business: Technologies. Frac Shack Inc. introduces world's first Bi-Fuel Distribution Unit for hydraulic fracturing industry. Texas Oil & Gas: The National Magazine for Oil & Gas in Texas. vol. 4, Issue 2. 2015. p. 27.

(Continued)

Primary Examiner — Jason K Niesz
(74) *Attorney, Agent, or Firm* — Carlson, Gaskey & Olds, P.C.

(57) **ABSTRACT**

A distribution station includes a mobile trailer, a pump on the mobile trailer, first and second manifolds on the mobile trailer and fluidly connected with the pump, a plurality of hoses, a plurality of reels, a plurality of valves, and a plurality of fluid level sensors. The hoses are connected with the reels. A portion of the reels are connected with the first manifold and another portion of the reels are connected with the second manifold. Each of the valves is situated between one of the first or second manifolds and a respective different one of the hoses. Each of the fluid level sensors is associated with a respective different one of the hoses. The reels are arranged on first and second opposed sides in the mobile trailer, with an aisle walkway down the middle of the mobile trailer.

22 Claims, 19 Drawing Sheets

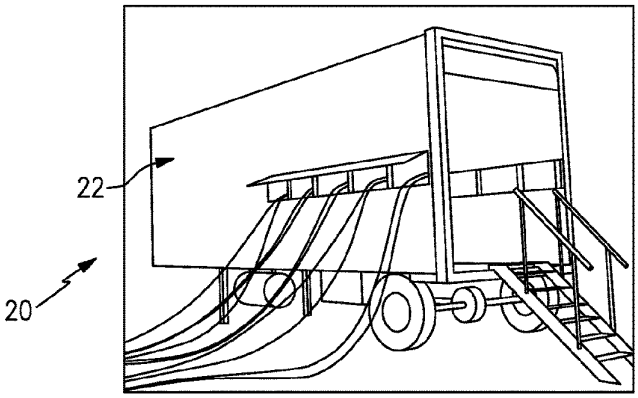

(56) **References Cited**

U.S. PATENT DOCUMENTS

2,777,461	A	1/1957	Wildhaber	
3,028,010	A	4/1962	Headrick	
3,136,295	A	6/1964	Gramo	
3,547,141	A	12/1970	Alexander	
3,618,643	A	11/1971	Thomson	
4,139,019	A	2/1979	Bresie et al.	
4,591,115	A	5/1986	DeCarlo	
4,930,665	A	6/1990	Devine	
5,406,988	A	4/1995	Hopkins	
5,454,408	A	10/1995	DiBella et al.	
5,503,199	A	4/1996	Whitley, II et al.	
5,538,051	A	7/1996	Brown et al.	
5,708,424	A	1/1998	Orlando et al.	
5,884,675	A	3/1999	Krasnov	
6,206,056	B1	3/2001	Lagache	
6,564,615	B1	5/2003	Carter	
6,651,706	B2	11/2003	Litt	
6,697,705	B2	2/2004	Johnson et al.	
6,755,225	B1	6/2004	Niedwiecki et al.	
6,761,194	B1	7/2004	Blong	
6,786,245	B1	9/2004	Eichelberger et al.	
7,063,276	B2	6/2006	Newton	
7,106,026	B2	9/2006	Moore	
7,353,808	B2	4/2008	Kakoo	
7,415,995	B2	8/2008	Plummer et al.	
7,458,543	B2	12/2008	Cutler et al.	
7,568,507	B2	8/2009	Farese et al.	
7,602,143	B2	10/2009	Capizzo	
7,628,182	B2	12/2009	Poulter	
7,938,151	B2	5/2011	Hockner	
9,346,662	B2	5/2016	Van Vliet et al.	
9,371,830	B2	6/2016	Moffitt, Jr.	
9,371,831	B2	6/2016	Moffitt, Jr.	
2007/0079891	A1	4/2007	Farese et al.	
2007/0164031	A1	7/2007	Holz	
2007/0181212	A1	8/2007	Fell	
2011/0197988	A1*	8/2011	Van Vliet	B67D 7/04 141/1
2016/0076533	A1	3/2016	Moffitt, Jr.	

FOREIGN PATENT DOCUMENTS

WO	2006005686	1/2006
WO	2008083830	7/2008
WO	2009026607	3/2009

OTHER PUBLICATIONS

Frac Shack International. Publications & Endorsements. Retrieved Aug. 23, 2016 from: http://www.fracshack.com.

Frac Shack International. Technology. Retrieved Aug. 23, 2016 from: http://www.fracshack.com.

Frac Shack International. Design Benefits. Retrieved Aug. 23, 2016 from: http://www.fracshack.com.

Frac Shack International. Service. Retrieved Aug. 23, 2016 from: http://www.fracshack.com.

Frac Shack International. Frac Shack Series—Series A. Retrieved Aug. 23, 2016 from: http://www.fracshack.com.

Frac Shack International. Frac Shack Series—Series B. Retrieved Aug. 23, 2016 from: http://www.fracshack.com.

Frac Shack International. Frac Shack Series—Series C. Retrieved Aug. 23, 2016 from: http://www.fracshack.com.

Frac Shack International. Frac Shack Series—Series D. Retrieved Aug. 23, 2016 from: http://www.fracshack.com.

Frac Shack International. Frac Shack Series—Series E. Retrieved Aug. 23, 2016 from: http://www.fracshack.com.

Frac Shack International. Frac Shack Series—Series EG. Retrieved Aug. 23, 2016 from: http://www.fracshack.com.

Mann Tek. Dry Disconnect Couplings. Retrieved Jul. 22, 2016 from: http://www.manntek.com/products/drydisconnectcouplings p. 1-4.

Mann Tek. Dry Aviation Couplings. Retrieved Jul. 22, 2016 from: http://www.manntek.com/products/dryaviationcouplings p. 1-4.

Water, J. (2013). Better Safe than Sorry: Frac Shack a welcome addition to the oil patch. Jan. 2, 2011 Retrieved Aug. 23, 2016 from: http://www.pipelinenewsnorth.ca/better-safe-than-sorry-1.1123066.

* cited by examiner

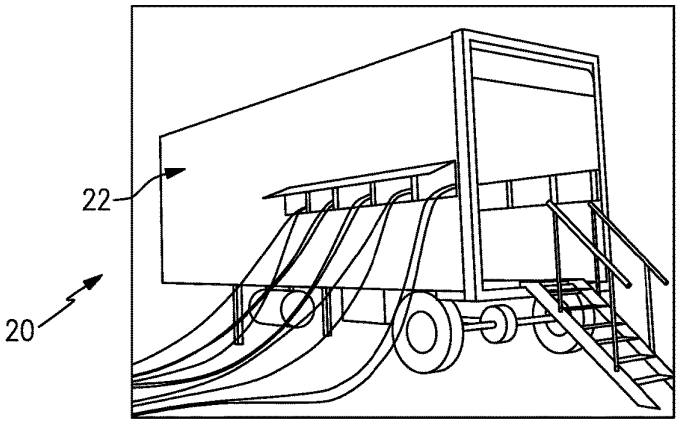
22
20

FIG.1

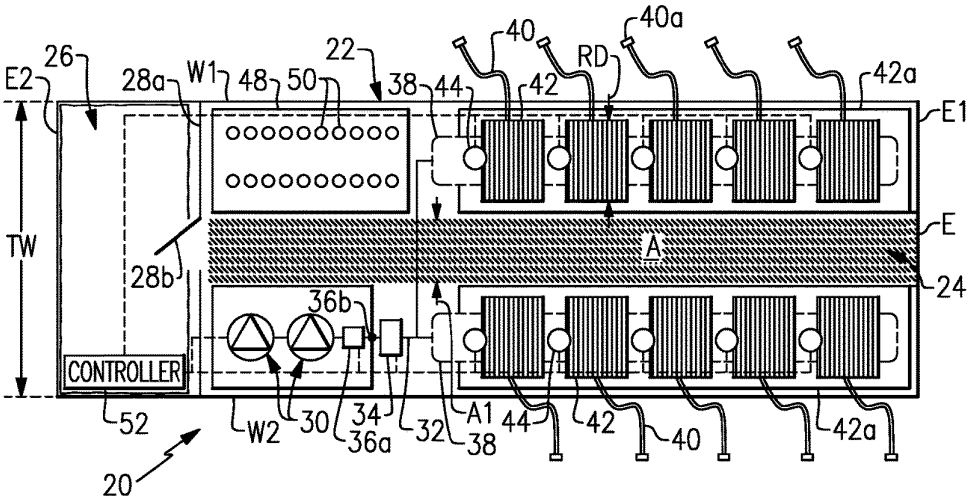
E2
26
28a
W1
48
50
22
38
44
40
42
RD
40a
42a
E1
TW
28b
A
E
24
36b
CONTROLLER
52
W2
30
34
36a
32
A1
38
44
42
40
42a
20

FIG.2

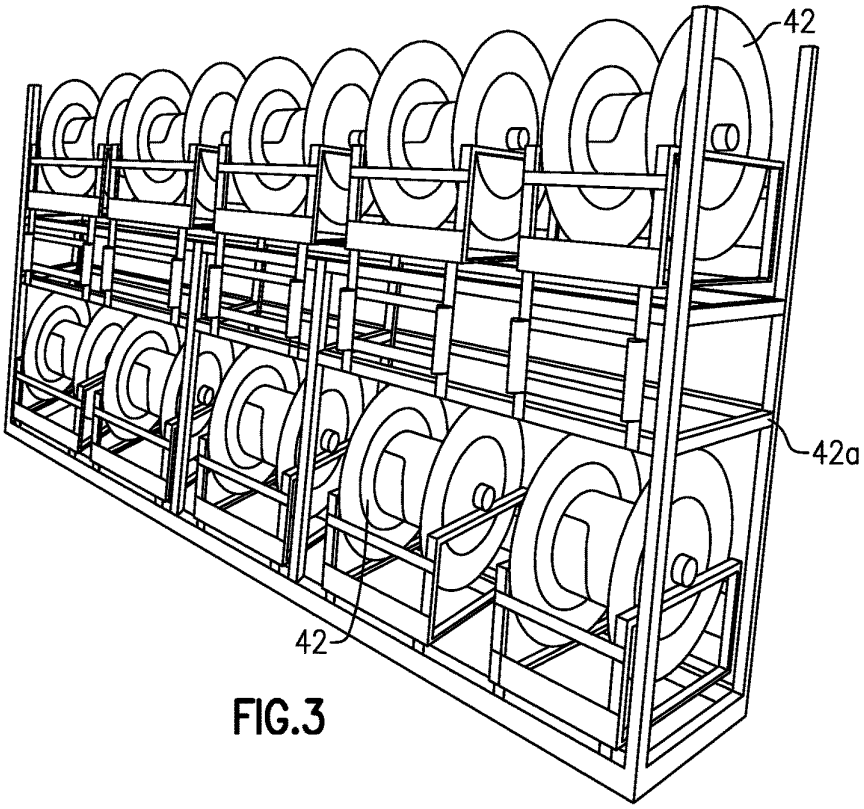

FIG.3

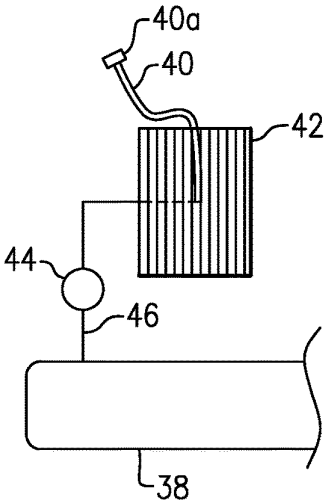

FIG.4

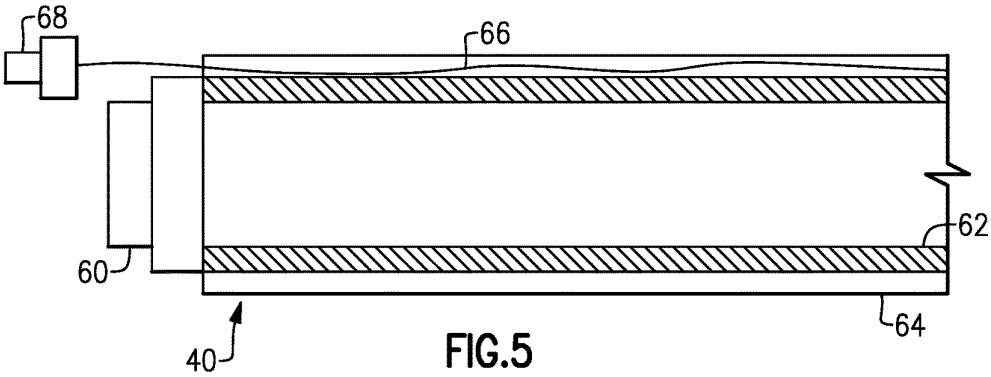

FIG.5

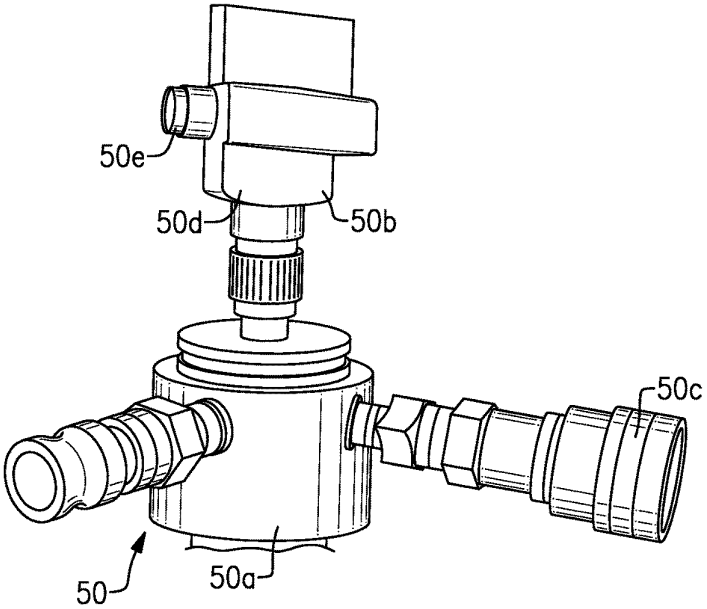

FIG.6

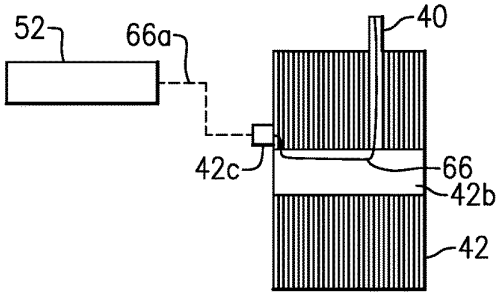

FIG.7

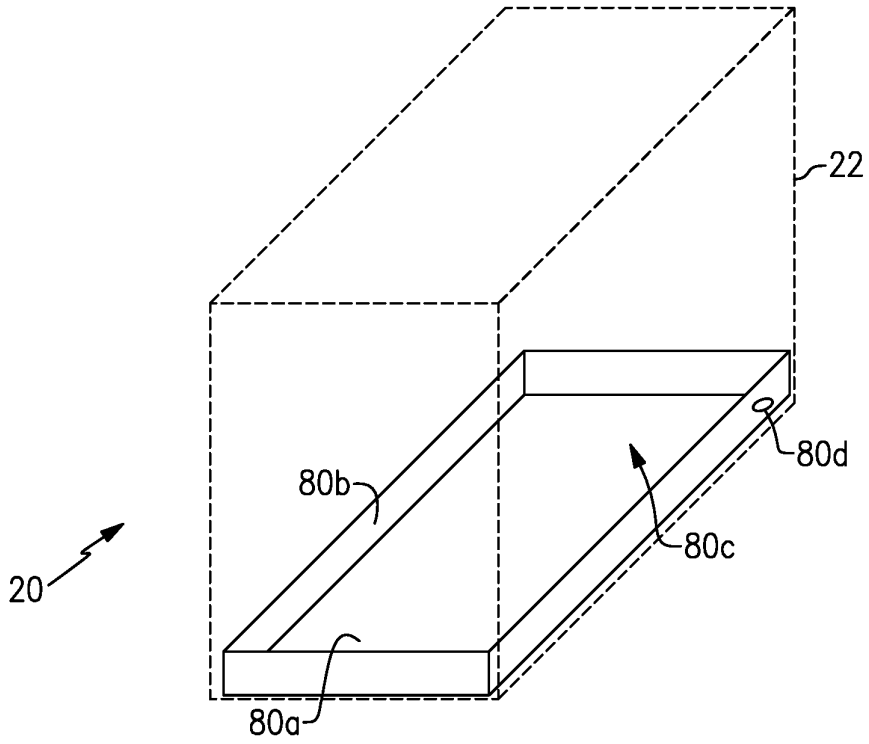

FIG.8

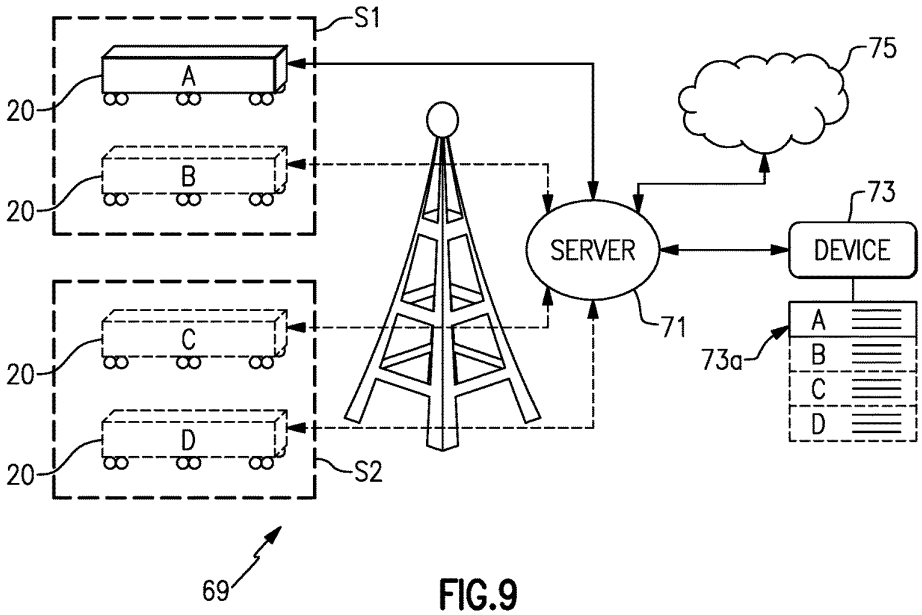

FIG.9

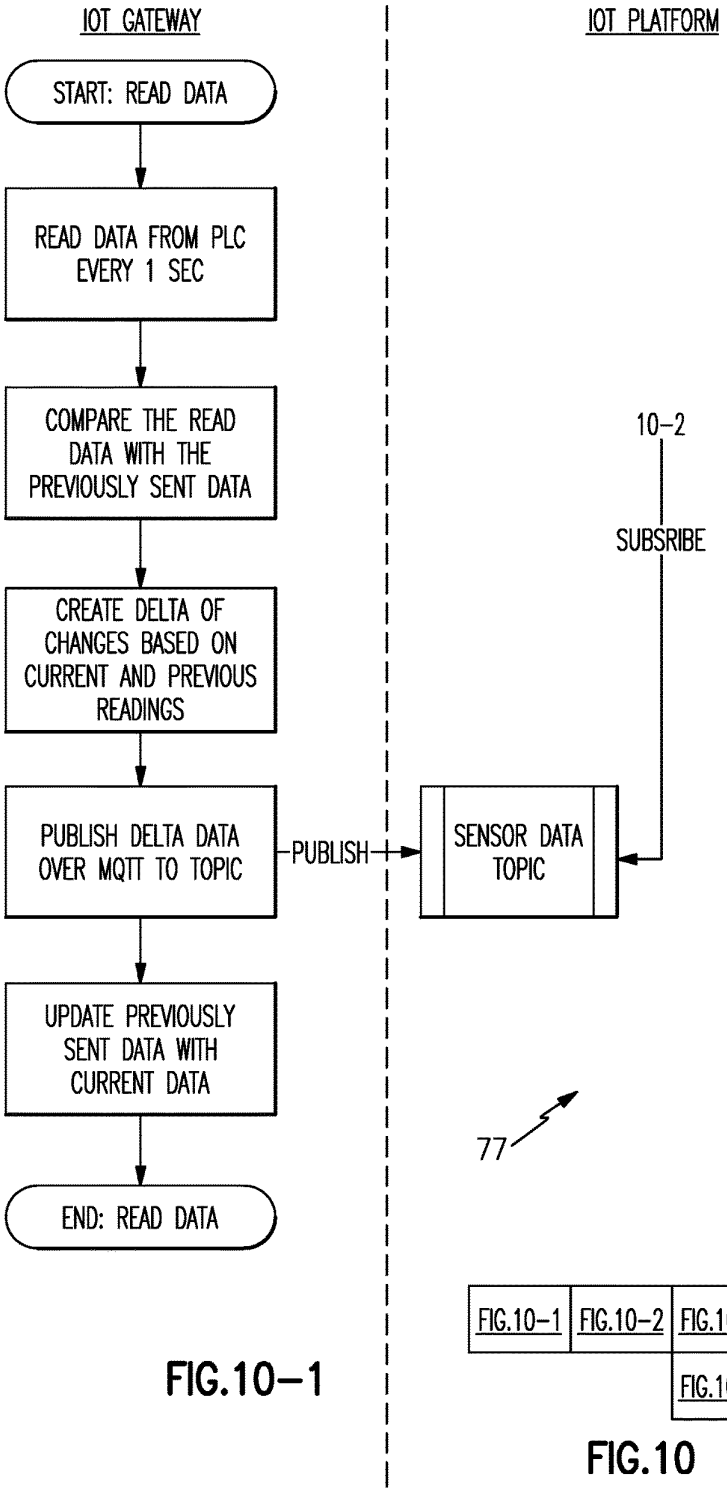

FIG.10-1

FIG.10-1	FIG.10-2	FIG.10-3	FIG.10-4
		FIG.10-6	FIG.10-5

FIG.10

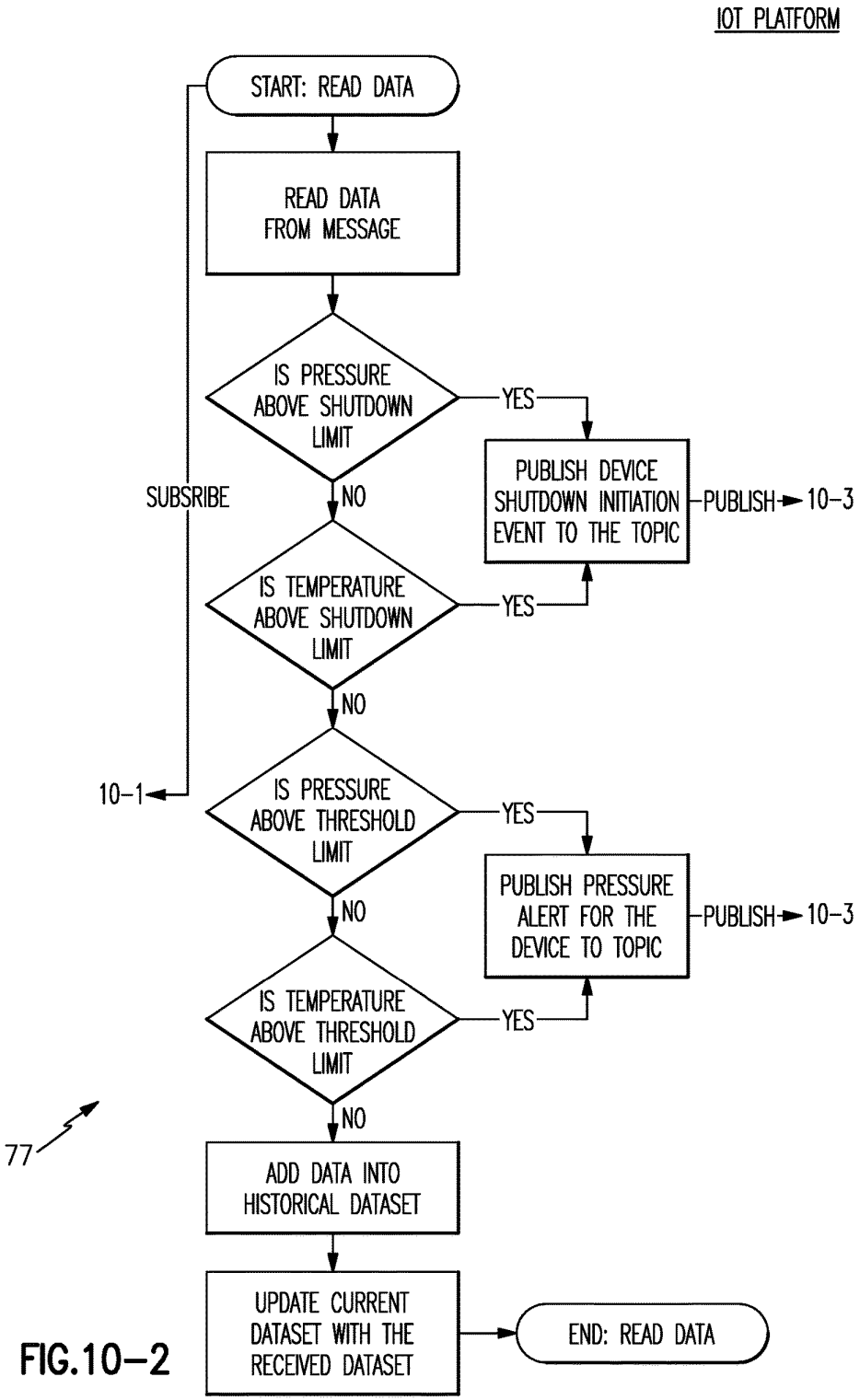
IOT PLATFORM
START: READ DATA
READ DATA FROM MESSAGE
IS PRESSURE ABOVE SHUTDOWN LIMIT
YES
PUBLISH DEVICE SHUTDOWN INITIATION EVENT TO THE TOPIC
PUBLISH
10-3
SUBSRIBE
NO
IS TEMPERATURE ABOVE SHUTDOWN LIMIT
YES
NO
10-1
IS PRESSURE ABOVE THRESHOLD LIMIT
YES
PUBLISH PRESSURE ALERT FOR THE DEVICE TO TOPIC
PUBLISH
10-3
NO
IS TEMPERATURE ABOVE THRESHOLD LIMIT
YES
NO
77
ADD DATA INTO HISTORICAL DATASET
UPDATE CURRENT DATASET WITH THE RECEIVED DATASET
END: READ DATA

FIG.10-2

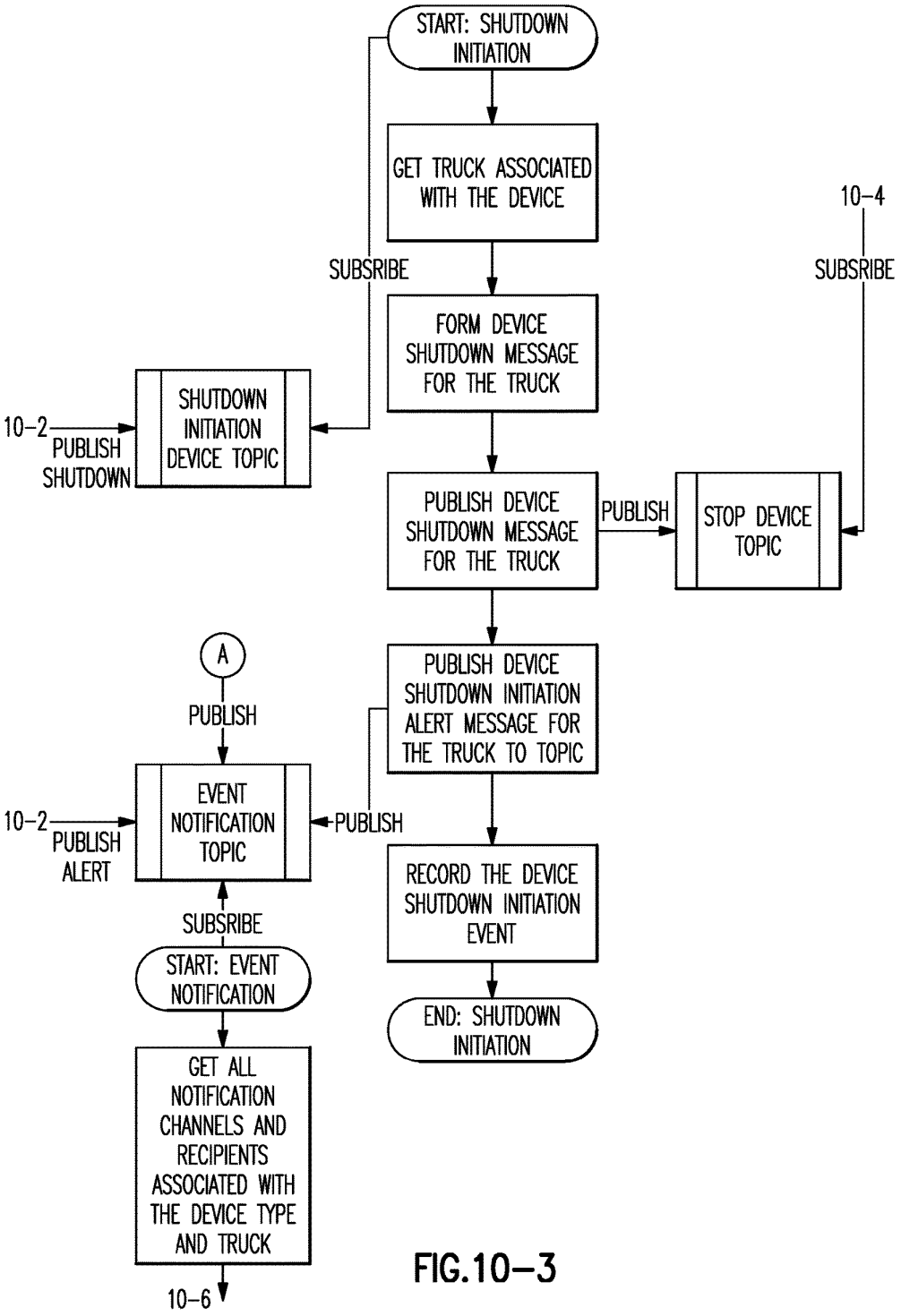
START: SHUTDOWN INITIATION
GET TRUCK ASSOCIATED WITH THE DEVICE
SUBSRIBE
FORM DEVICE SHUTDOWN MESSAGE FOR THE TRUCK
10-4
SUBSRIBE
10-2
PUBLISH SHUTDOWN
SHUTDOWN INITIATION DEVICE TOPIC
PUBLISH DEVICE SHUTDOWN MESSAGE FOR THE TRUCK
PUBLISH
STOP DEVICE TOPIC
A
PUBLISH
PUBLISH DEVICE SHUTDOWN INITIATION ALERT MESSAGE FOR THE TRUCK TO TOPIC
10-2
PUBLISH ALERT
EVENT NOTIFICATION TOPIC
PUBLISH
RECORD THE DEVICE SHUTDOWN INITIATION EVENT
SUBSRIBE
START: EVENT NOTIFICATION
END: SHUTDOWN INITIATION
GET ALL NOTIFICATION CHANNELS AND RECIPIENTS ASSOCIATED WITH THE DEVICE TYPE AND TRUCK
10-6

FIG.10-3

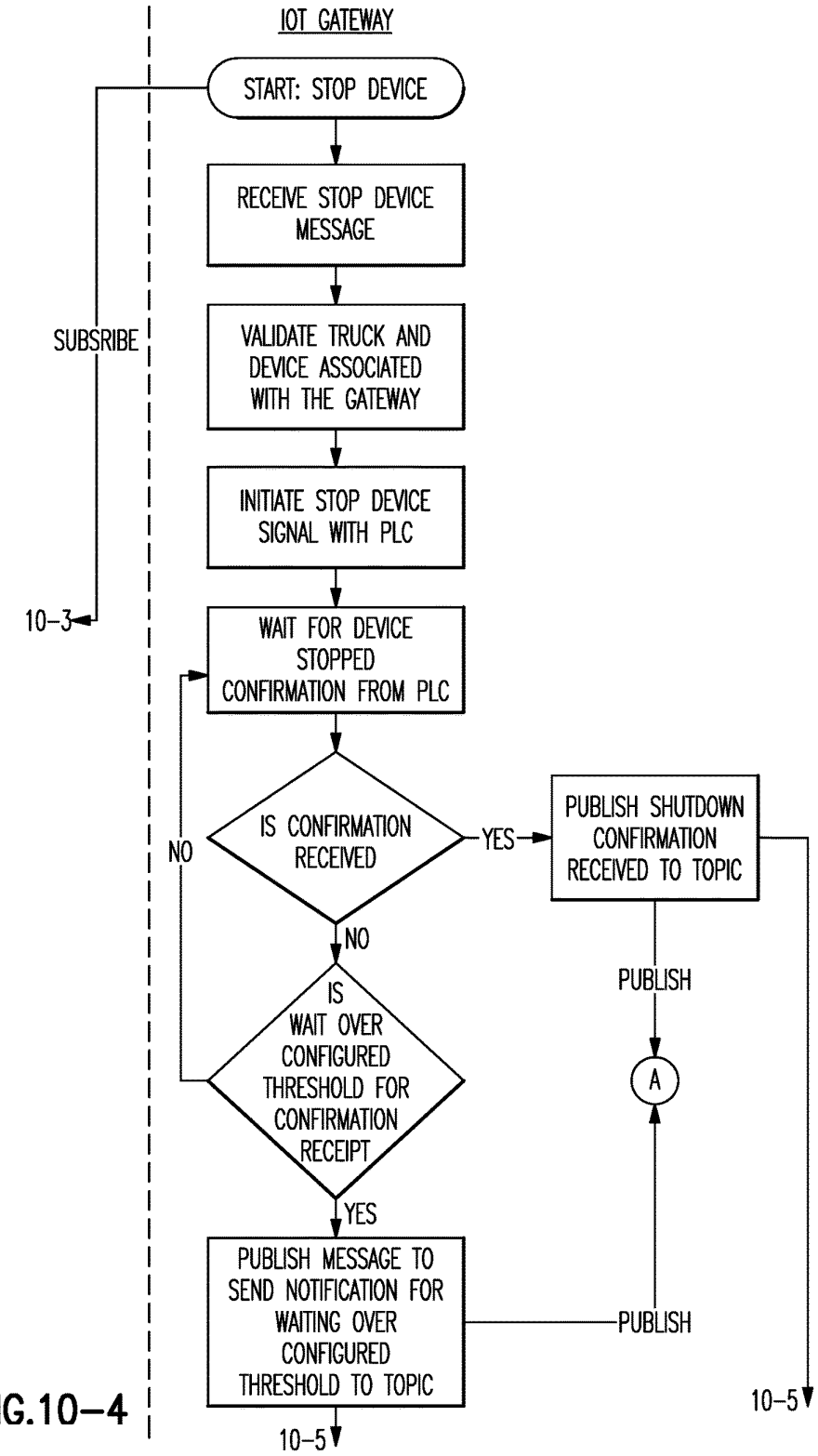
IOT GATEWAY
START: STOP DEVICE
RECEIVE STOP DEVICE MESSAGE
VALIDATE TRUCK AND DEVICE ASSOCIATED WITH THE GATEWAY
INITIATE STOP DEVICE SIGNAL WITH PLC
WAIT FOR DEVICE STOPPED CONFIRMATION FROM PLC
IS CONFIRMATION RECEIVED
YES
NO
PUBLISH SHUTDOWN CONFIRMATION RECEIVED TO TOPIC
PUBLISH
A
IS WAIT OVER CONFIGURED THRESHOLD FOR CONFIRMATION RECEIPT
NO
YES
PUBLISH MESSAGE TO SEND NOTIFICATION FOR WAITING OVER CONFIGURED THRESHOLD TO TOPIC
PUBLISH
SUBSRIBE
10-3
10-5
10-5

FIG.10-4

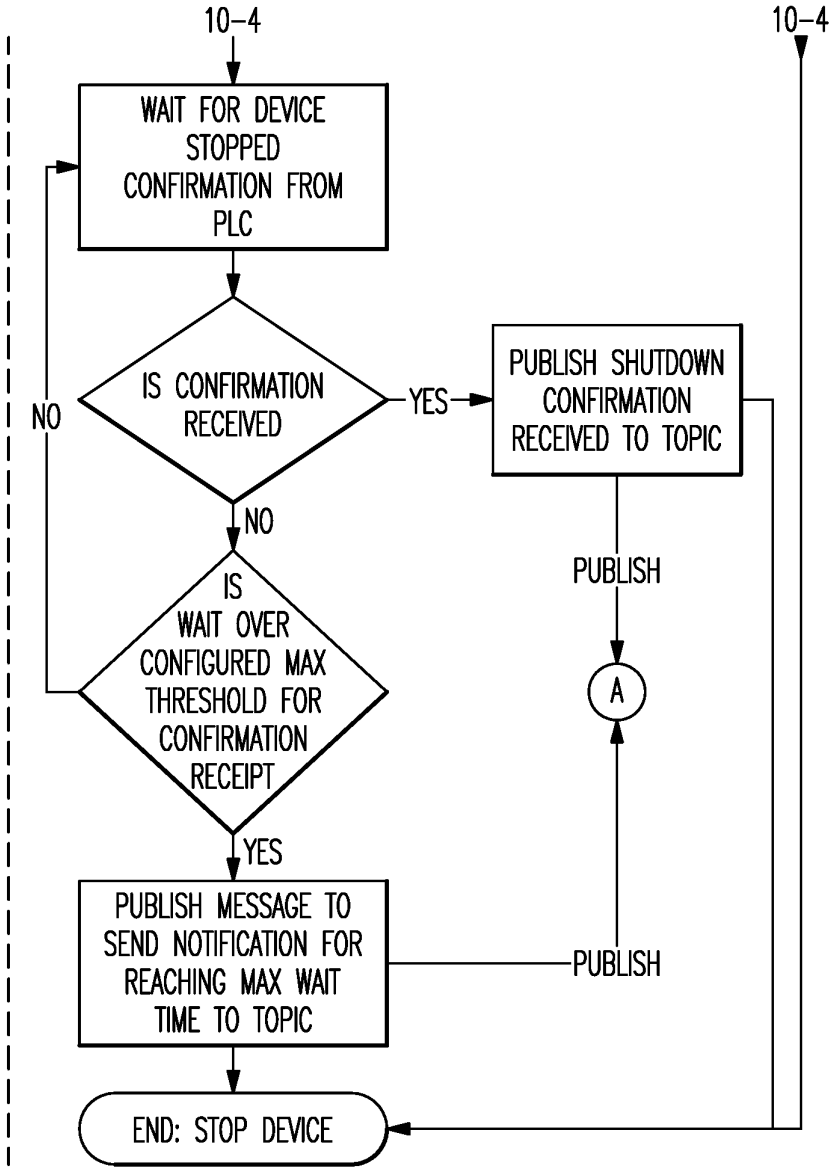
10–4
10–4
WAIT FOR DEVICE STOPPED CONFIRMATION FROM PLC
IS CONFIRMATION RECEIVED
YES
NO
PUBLISH SHUTDOWN CONFIRMATION RECEIVED TO TOPIC
NO
IS WAIT OVER CONFIGURED MAX THRESHOLD FOR CONFIRMATION RECEIPT
PUBLISH
A
YES
PUBLISH MESSAGE TO SEND NOTIFICATION FOR REACHING MAX WAIT TIME TO TOPIC
PUBLISH
END: STOP DEVICE

FIG.10–5

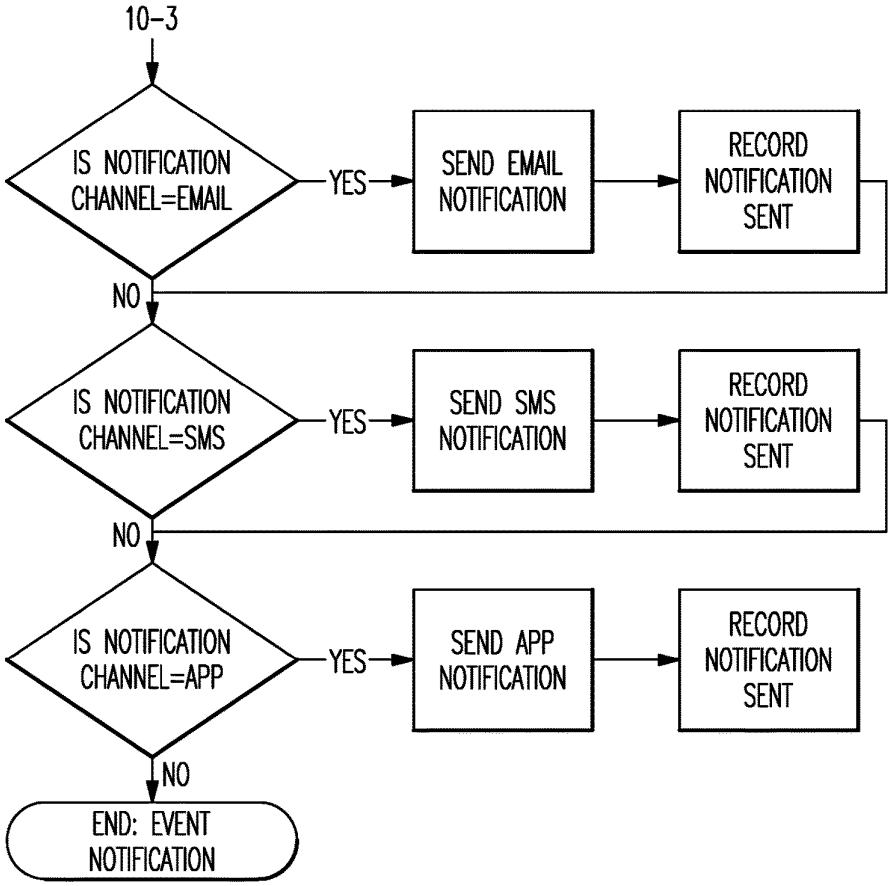
10-3
IS NOTIFICATION CHANNEL=EMAIL
YES
SEND EMAIL NOTIFICATION
RECORD NOTIFICATION SENT
NO
IS NOTIFICATION CHANNEL=SMS
YES
SEND SMS NOTIFICATION
RECORD NOTIFICATION SENT
NO
IS NOTIFICATION CHANNEL=APP
YES
SEND APP NOTIFICATION
RECORD NOTIFICATION SENT
NO
END: EVENT NOTIFICATION

FIG.10-6

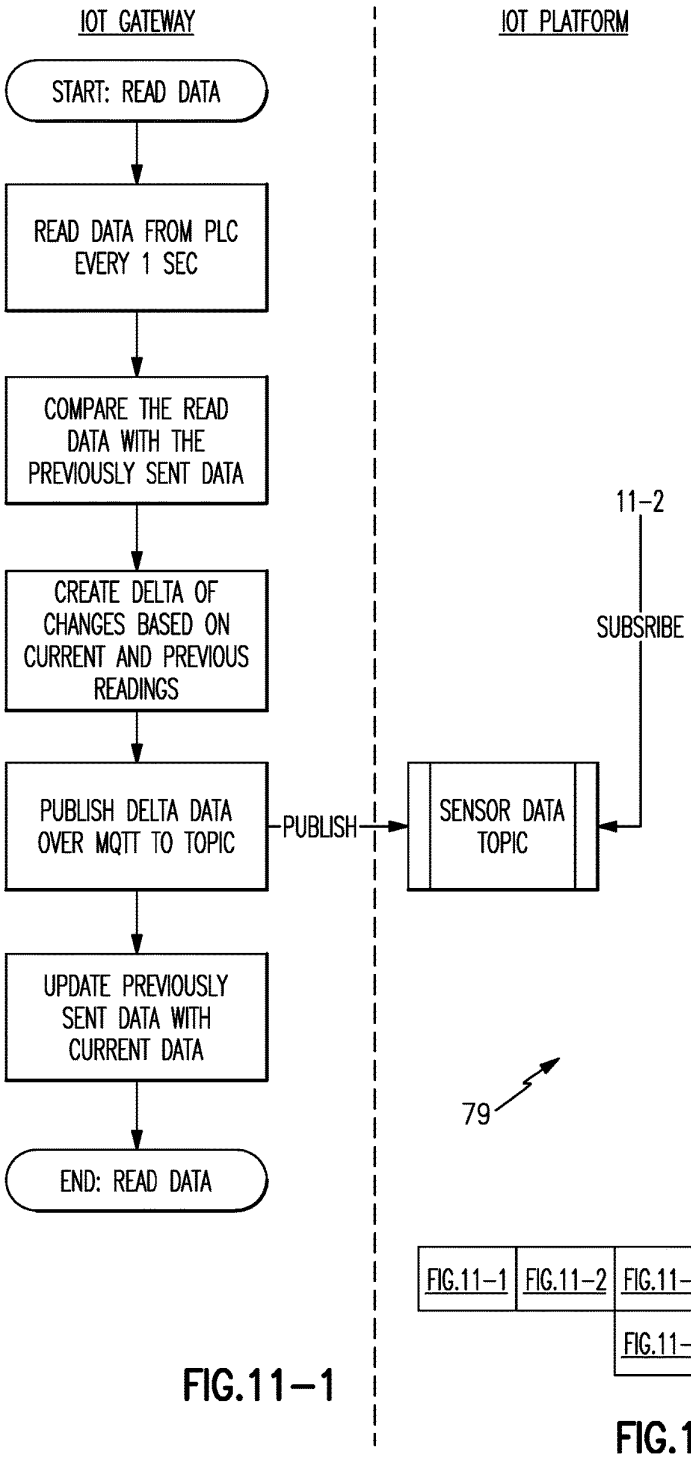

FIG.11-1

FIG.11-1	FIG.11-2	FIG.11-3	FIG.11-4	FIG.11-5
		FIG.11-6	FIG.11-7	FIG.11-8

FIG.11

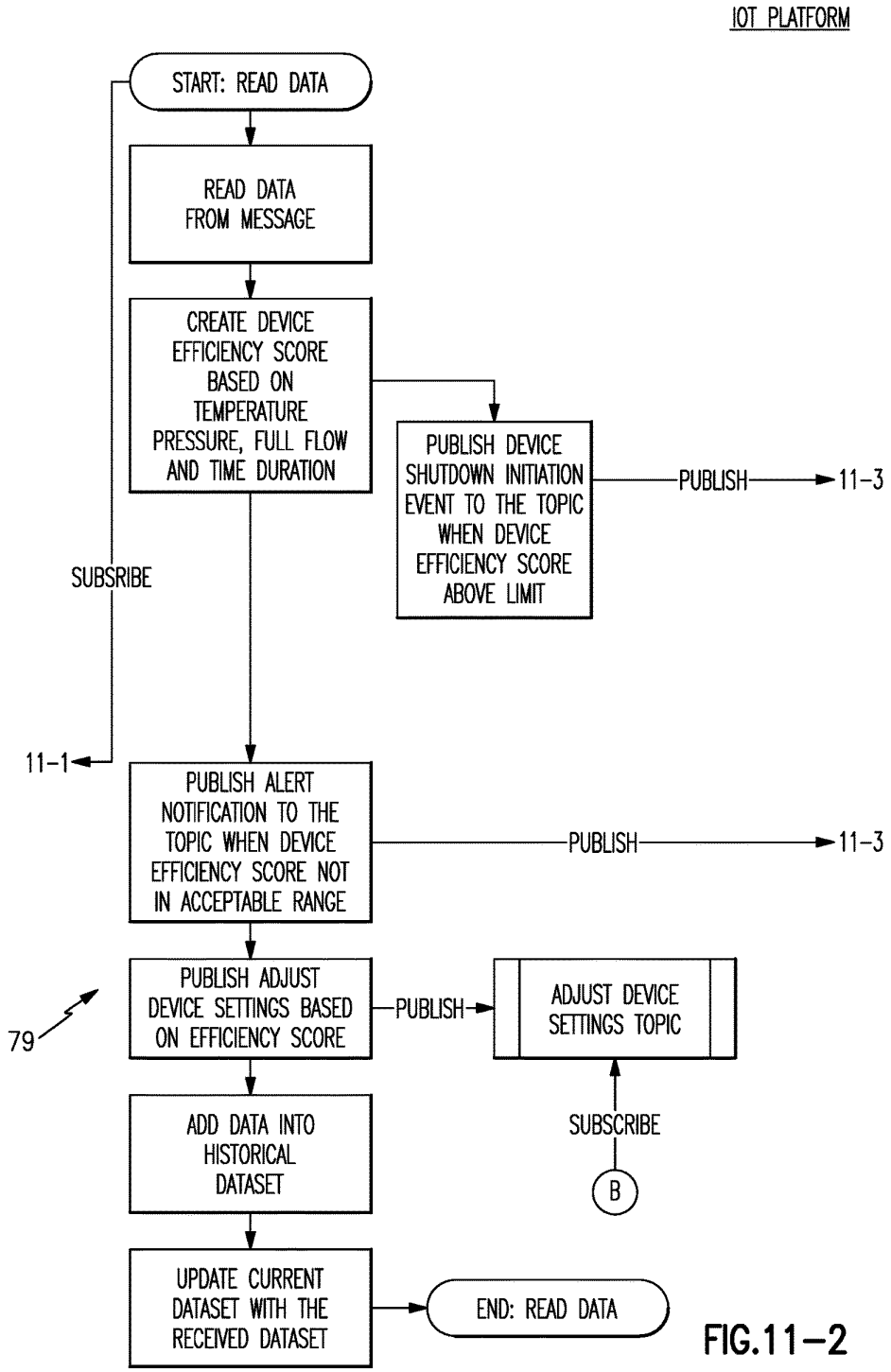
IOT PLATFORM
START: READ DATA
READ DATA FROM MESSAGE
CREATE DEVICE EFFICIENCY SCORE BASED ON TEMPERATURE PRESSURE, FULL FLOW AND TIME DURATION
PUBLISH DEVICE SHUTDOWN INITIATION EVENT TO THE TOPIC WHEN DEVICE EFFICIENCY SCORE ABOVE LIMIT
PUBLISH
11-3
SUBSRIBE
11-1
PUBLISH ALERT NOTIFICATION TO THE TOPIC WHEN DEVICE EFFICIENCY SCORE NOT IN ACCEPTABLE RANGE
PUBLISH
11-3
79
PUBLISH ADJUST DEVICE SETTINGS BASED ON EFFICIENCY SCORE
PUBLISH
ADJUST DEVICE SETTINGS TOPIC
SUBSCRIBE
B
ADD DATA INTO HISTORICAL DATASET
UPDATE CURRENT DATASET WITH THE RECEIVED DATASET
END: READ DATA

FIG.11-2

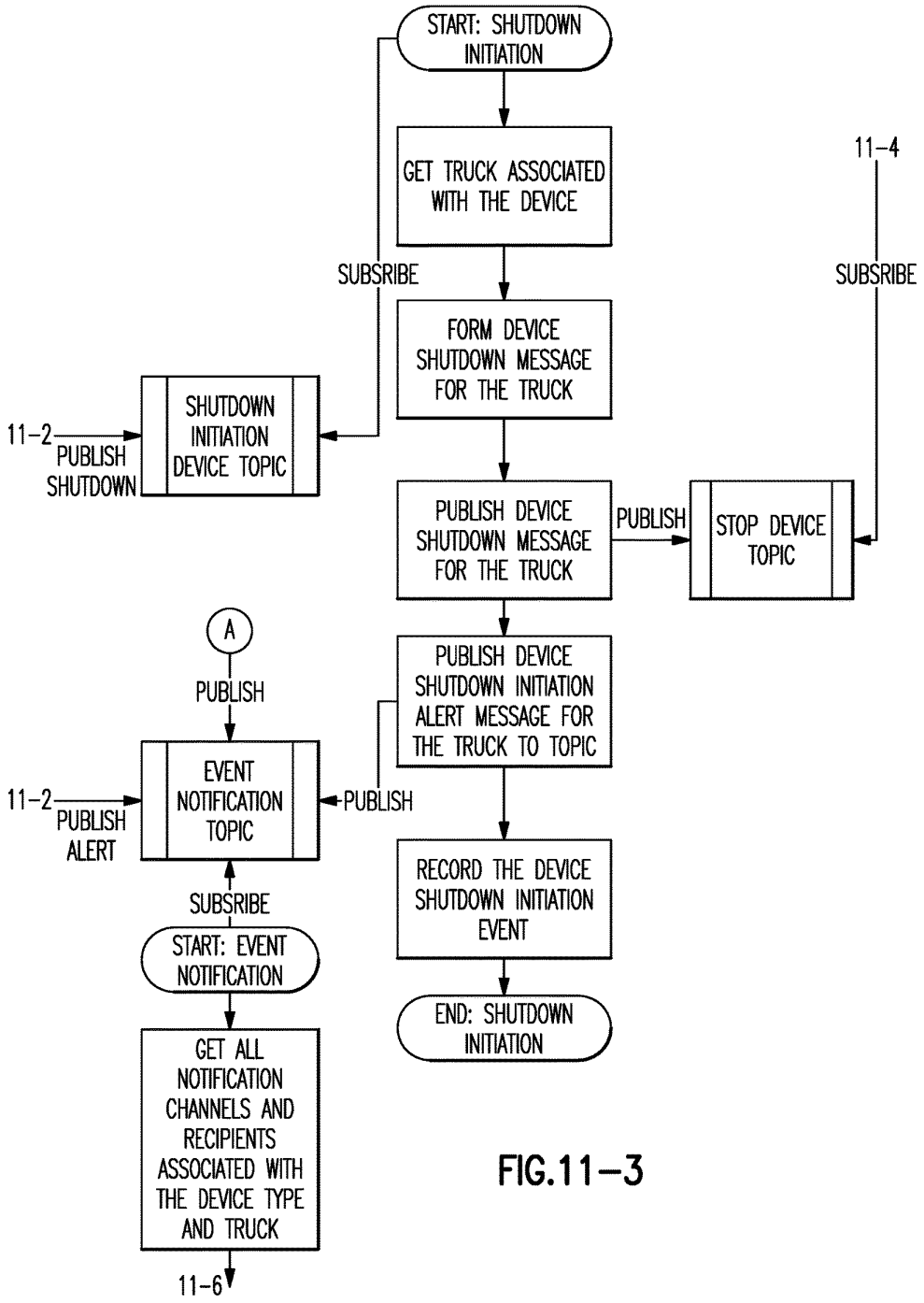
START: SHUTDOWN INITIATION
GET TRUCK ASSOCIATED WITH THE DEVICE
SUBSRIBE
FORM DEVICE SHUTDOWN MESSAGE FOR THE TRUCK
11-2
PUBLISH SHUTDOWN
SHUTDOWN INITIATION DEVICE TOPIC
PUBLISH DEVICE SHUTDOWN MESSAGE FOR THE TRUCK
PUBLISH
STOP DEVICE TOPIC
11-4
SUBSRIBE
A
PUBLISH
PUBLISH DEVICE SHUTDOWN INITIATION ALERT MESSAGE FOR THE TRUCK TO TOPIC
11-2
PUBLISH ALERT
EVENT NOTIFICATION TOPIC
PUBLISH
SUBSRIBE
START: EVENT NOTIFICATION
GET ALL NOTIFICATION CHANNELS AND RECIPIENTS ASSOCIATED WITH THE DEVICE TYPE AND TRUCK
11-6
RECORD THE DEVICE SHUTDOWN INITIATION EVENT
END: SHUTDOWN INITIATION

FIG.11-3

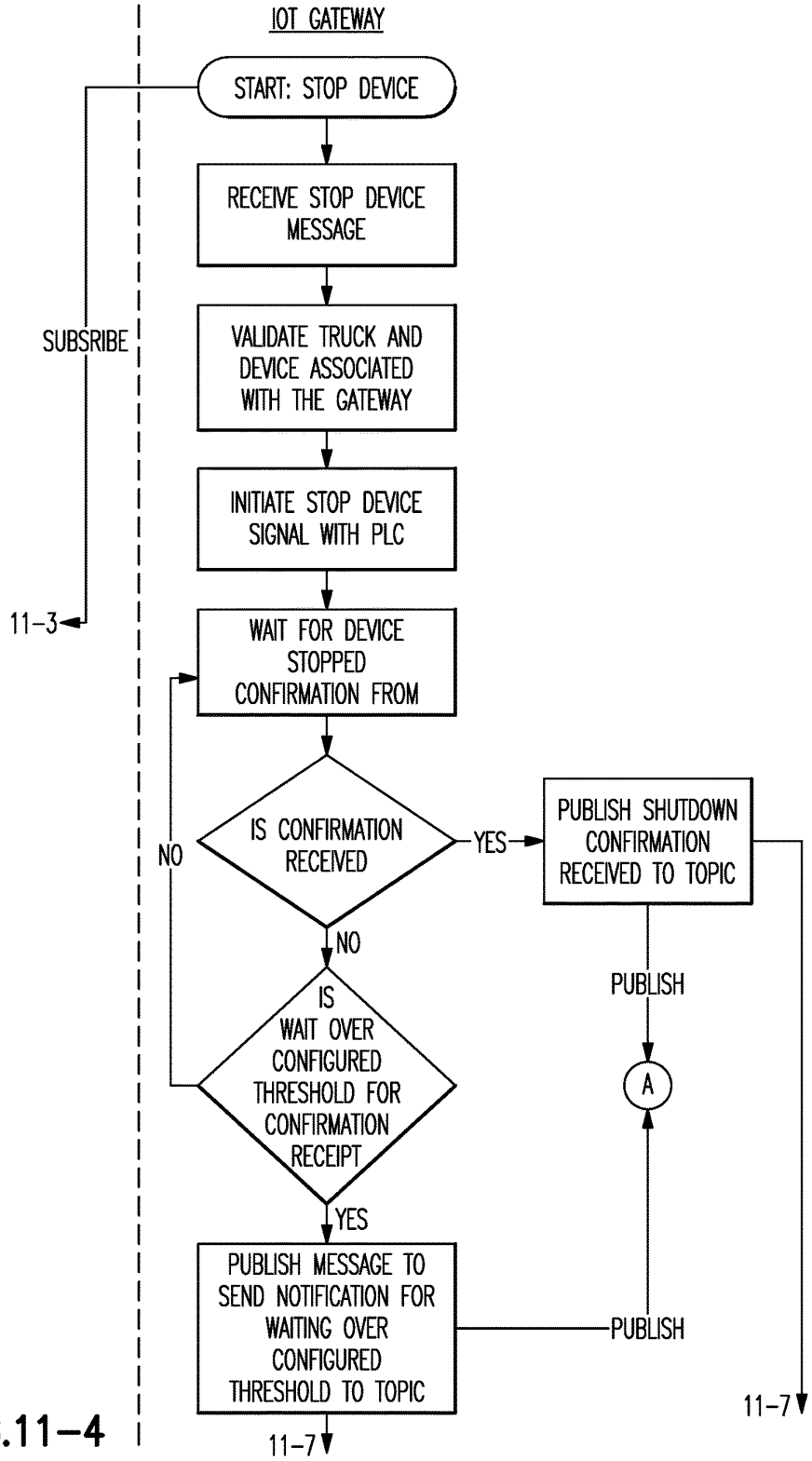
IOT GATEWAY
START: STOP DEVICE
RECEIVE STOP DEVICE MESSAGE
VALIDATE TRUCK AND DEVICE ASSOCIATED WITH THE GATEWAY
INITIATE STOP DEVICE SIGNAL WITH PLC
WAIT FOR DEVICE STOPPED CONFIRMATION FROM
IS CONFIRMATION RECEIVED
YES
NO
PUBLISH SHUTDOWN CONFIRMATION RECEIVED TO TOPIC
PUBLISH
A
IS WAIT OVER CONFIGURED THRESHOLD FOR CONFIRMATION RECEIPT
NO
YES
PUBLISH MESSAGE TO SEND NOTIFICATION FOR WAITING OVER CONFIGURED THRESHOLD TO TOPIC
PUBLISH
SUBSRIBE
11-3
11-7
11-7

FIG.11-4

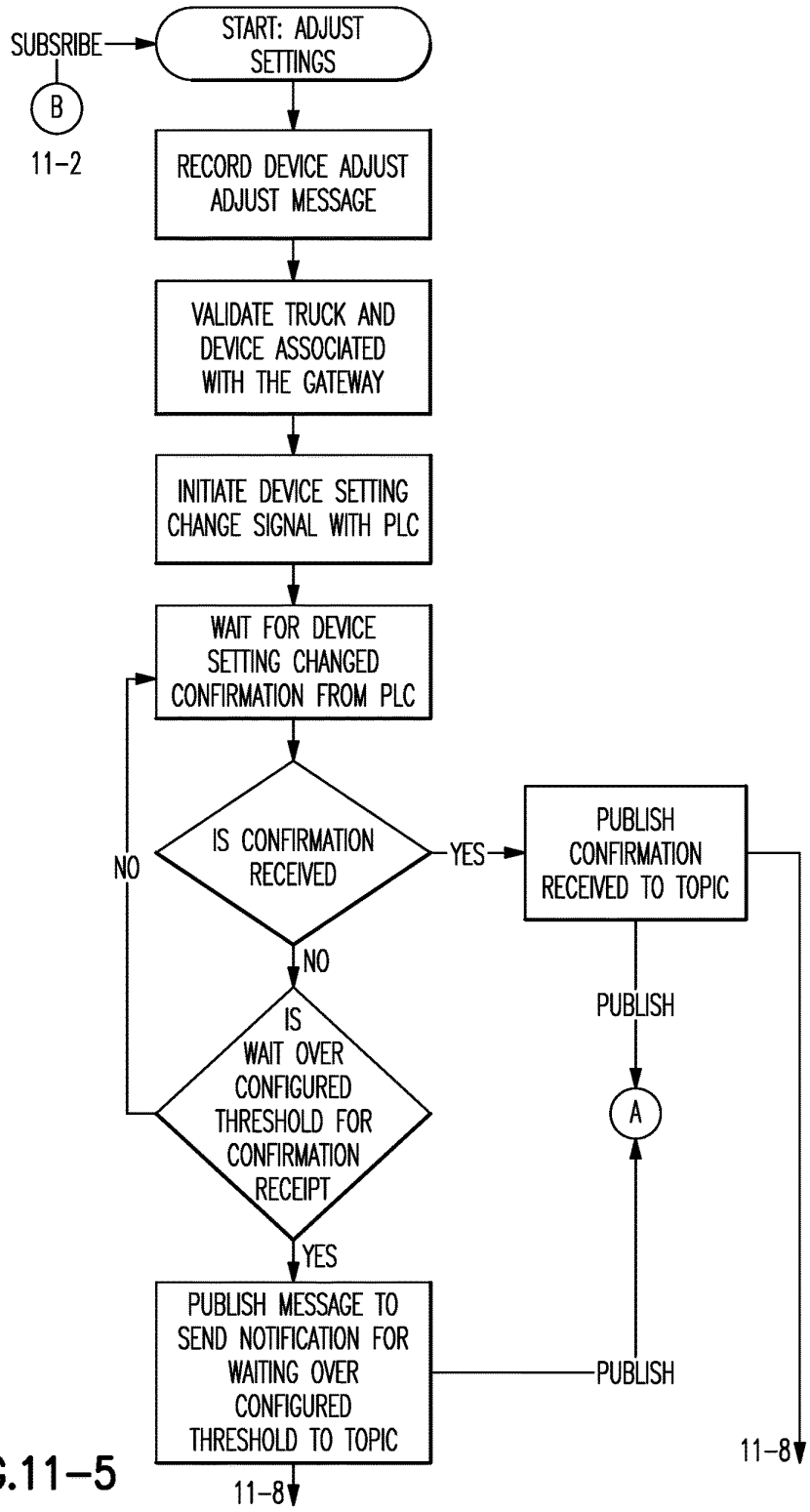
SUBSRIBE
B
11-2
START: ADJUST SETTINGS
RECORD DEVICE ADJUST ADJUST MESSAGE
VALIDATE TRUCK AND DEVICE ASSOCIATED WITH THE GATEWAY
INITIATE DEVICE SETTING CHANGE SIGNAL WITH PLC
WAIT FOR DEVICE SETTING CHANGED CONFIRMATION FROM PLC
IS CONFIRMATION RECEIVED
YES
NO
PUBLISH CONFIRMATION RECEIVED TO TOPIC
PUBLISH
A
IS WAIT OVER CONFIGURED THRESHOLD FOR CONFIRMATION RECEIPT
NO
YES
PUBLISH MESSAGE TO SEND NOTIFICATION FOR WAITING OVER CONFIGURED THRESHOLD TO TOPIC
PUBLISH
11-8
11-8

FIG.11-5

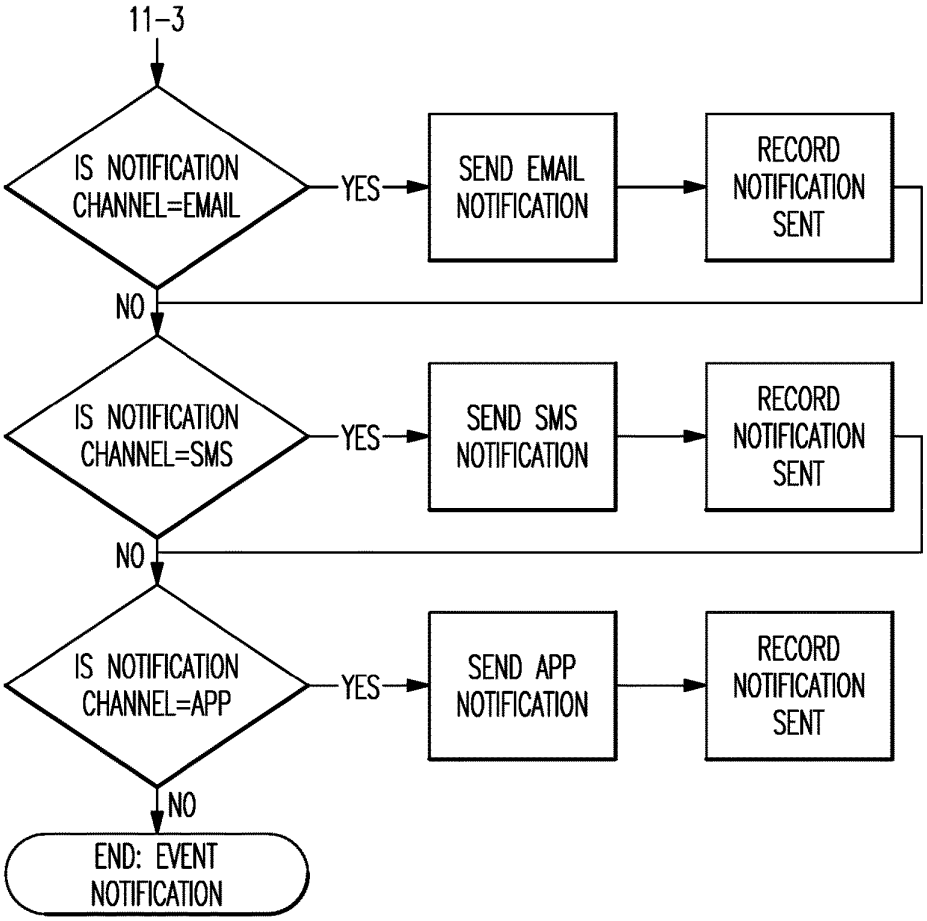
11-3
IS NOTIFICATION CHANNEL=EMAIL
YES
SEND EMAIL NOTIFICATION
RECORD NOTIFICATION SENT
NO
IS NOTIFICATION CHANNEL=SMS
YES
SEND SMS NOTIFICATION
RECORD NOTIFICATION SENT
NO
IS NOTIFICATION CHANNEL=APP
YES
SEND APP NOTIFICATION
RECORD NOTIFICATION SENT
NO
END: EVENT NOTIFICATION

FIG.11-6

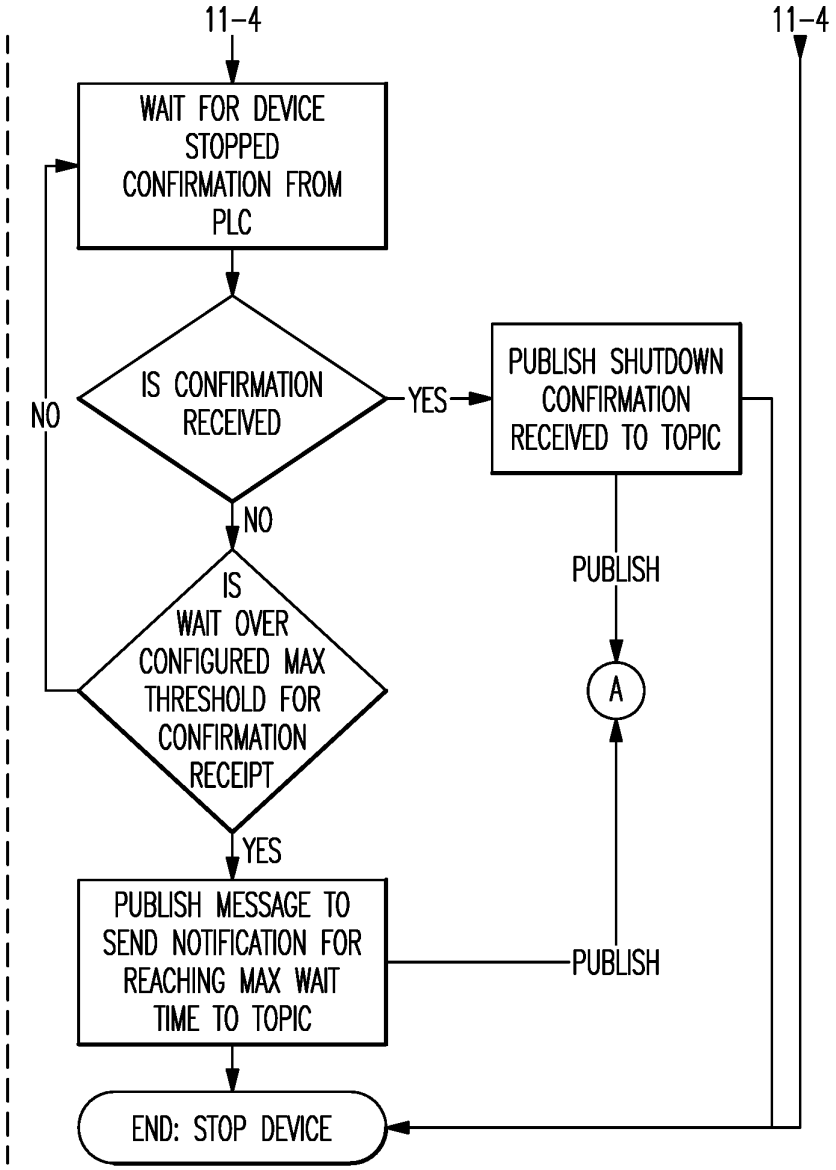
11-4
11-4
WAIT FOR DEVICE STOPPED CONFIRMATION FROM PLC
IS CONFIRMATION RECEIVED
YES
PUBLISH SHUTDOWN CONFIRMATION RECEIVED TO TOPIC
NO
NO
IS WAIT OVER CONFIGURED MAX THRESHOLD FOR CONFIRMATION RECEIPT
PUBLISH
A
YES
PUBLISH MESSAGE TO SEND NOTIFICATION FOR REACHING MAX WAIT TIME TO TOPIC
PUBLISH
END: STOP DEVICE

FIG.11-7

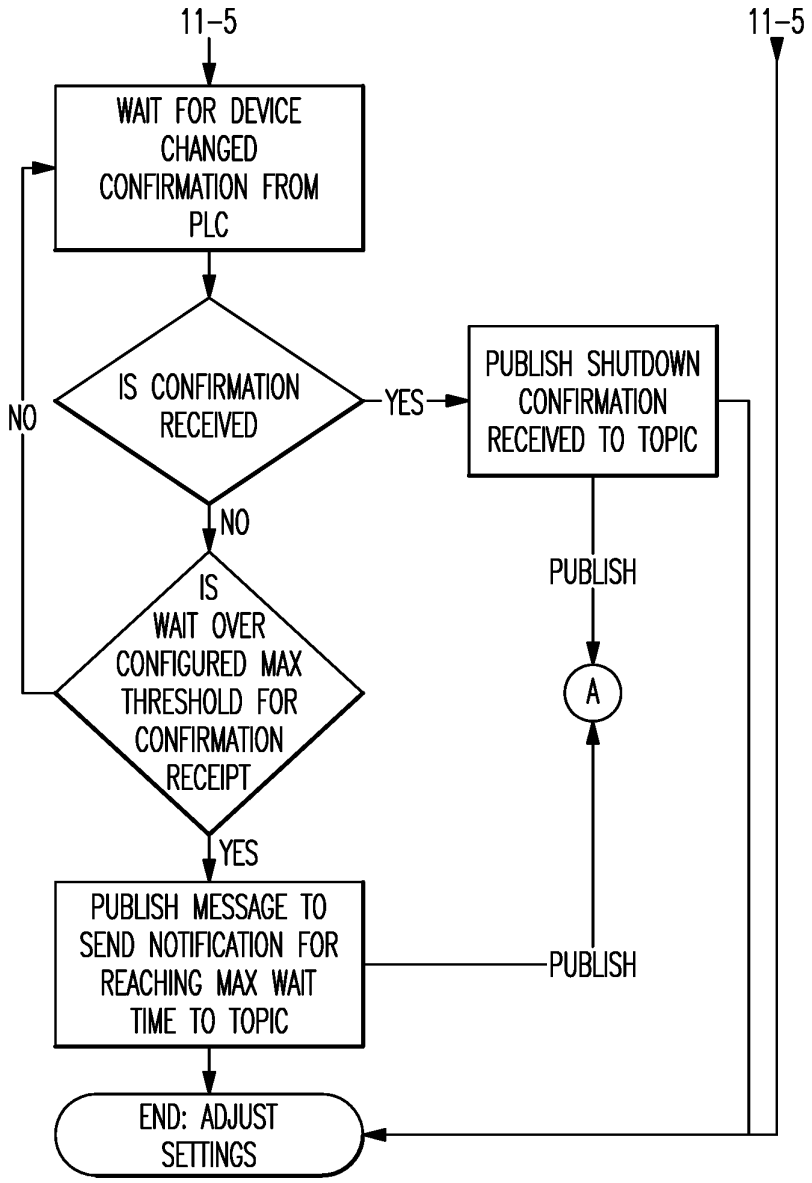
11-5
11-5
WAIT FOR DEVICE CHANGED CONFIRMATION FROM PLC
IS CONFIRMATION RECEIVED
YES
NO
PUBLISH SHUTDOWN CONFIRMATION RECEIVED TO TOPIC
NO
PUBLISH
IS WAIT OVER CONFIGURED MAX THRESHOLD FOR CONFIRMATION RECEIPT
A
YES
PUBLISH MESSAGE TO SEND NOTIFICATION FOR REACHING MAX WAIT TIME TO TOPIC
PUBLISH
END: ADJUST SETTINGS

FIG.11-8

MOBILE DISTRIBUTION STATION WITH AISLE WALKWAY

BACKGROUND

Hydraulic fracturing (also known as fracking) is a well-stimulation process that utilizes pressurized liquids to fracture rock formations. Pumps and other equipment used for hydraulic fracturing typically operate at the surface of the well site. The equipment may operate semi-continuously, until refueling is needed, at which time the equipment may be shut-down for refueling. Shut-downs are costly and reduce efficiency. More preferably, to avoid shut-downs fuel is replenished in a hot-refueling operation while the equipment continues to run. This permits fracking operations to proceed fully continuously; however, hot-refueling can be difficult to reliably sustain for the duration of the fracking operation.

SUMMARY

A distribution station according to an example of the present disclosure includes a mobile trailer, a pump on the mobile trailer, first and second manifolds on the mobile trailer and fluidly connected with the pump, a plurality of reels on the mobile trailer, a plurality of hoses connected, respectively, with the reels. A portion of the reels are connected with the first manifold and another portion of the reels are connected with the second manifold. Valves on the mobile trailer are each situated between one of the first or second manifolds and a respective different one of the hoses. Fluid level sensors are associated with respective different ones of the hoses. The reels are arranged on first and second opposed sides in the mobile trailer, with an aisle walkway down the middle of the mobile trailer.

In a further embodiment of any of the foregoing embodiments, the reels on each of the first and second opposed sides are arranged in upper and lower rows of reels.

A further embodiment of any of the foregoing embodiments includes first and second support racks on which the reels are supported. The first support rack is arranged on the first side and the second support rack arranged on the second side.

In a further embodiment of any of the foregoing embodiments, the aisle walkway has an aisle width and the reels have a reel diameter, and the aisle width is greater than the reel diameter by a factor of at least 1.3.

In a further embodiment of any of the foregoing embodiments, the trailer has a trailer width of no greater than about 96 inches.

In a further embodiment of any of the foregoing embodiments, a ratio of a number of reels in the upper row to a number of reels in the lower row is 1:1.

In a further embodiment of any of the foregoing embodiments, the mobile trailer includes a trailer end wall that has an outside door, and an inside wall that defines first and second compartments in the mobile trailer. The outside door opens into the first compartment, and at least the manifolds and the reels are in the first compartment.

In a further embodiment of any of the foregoing embodiments, the inside wall includes an inside door providing access between the first compartment and the second compartment. The aisle walkway extends from the outside door to the inside door.

A further embodiment of any of the foregoing embodiments includes a controller in the second compartment. The controller is configured to operate the valves.

In a further embodiment of any of the foregoing embodiments, the second compartment is insulated with a fire resistant or retardant material.

In a further embodiment of any of the foregoing embodiments, the aisle walkway has an aisle width and the reels have a reel diameter, and the aisle width is greater than the reel diameter by a factor of at least 1.3.

In a further embodiment of any of the foregoing embodiments, the aisle width is greater than the reel diameter by a factor of at least 1.5.

In a further embodiment of any of the foregoing embodiments, the aisle walkway has an aisle width and the mobile trailer has a trailer width, and a ratio of the trailer width to the aisle width is no greater than 5.

In a further embodiment of any of the foregoing embodiments, the ratio of the trailer width to the aisle width is greater than 2.

In a further embodiment of any of the foregoing embodiments, the ratio of the trailer width to the aisle width is equal to or less than 4.

A further embodiment of any of the foregoing embodiments includes a floor pan in the mobile trailer.

A distribution station according to an example of the present disclosure includes a mobile trailer, a pump on the mobile trailer, first and second manifolds on the mobile trailer and fluidly connected with the pump, and a plurality of reels on the mobile trailer. A plurality of hoses are connected, respectively, with the reels. A portion of the reels are connected with the first manifold and another portion of the reels are connected with the second manifold. Valves on the mobile trailer are situated between one of the first or second manifolds and respective different ones of the hoses. A plurality of fluid level sensors are associated with respective different ones of the hoses. The mobile trailer includes first and second opposed trailer side walls. A first group of the hoses are deployable from the first trailer side wall and a second group of the hoses are deployable from the second trailer side wall.

In a further embodiment of any of the foregoing embodiments, the reels are arranged on first and second opposed sides in the mobile trailer such that there is an aisle walkway down the middle of the mobile trailer.

In a further embodiment of any of the foregoing embodiments, the reels on each of the first and second opposed sides are arranged in upper and lower rows of reels.

In a further embodiment of any of the foregoing embodiments, the aisle walkway has an aisle width and the reels have a reel diameter, and the aisle width is greater than the reel diameter by a factor of at least 1.3.

In a further embodiment of any of the foregoing embodiments, the mobile trailer has a trailer width of no greater than about 96 inches.

A further embodiment of any of the foregoing embodiments includes a floor pan in the mobile trailer.

BRIEF DESCRIPTION OF THE DRAWINGS

The various features and advantages of the present disclosure will become apparent to those skilled in the art from the following detailed description. The drawings that accompany the detailed description can be briefly described as follows.

FIG. **1** illustrates an example mobile distribution station.

FIG. **2** illustrates an internal layout of a mobile distribution station.

FIG. **3** illustrates an isolated view of hose reels on a support rack used in a mobile distribution station.

FIG. **4** illustrates an example of a connection between a manifold, a control valve, and a reel.

FIG. **5** illustrates a sectioned view of an example hose for a mobile distribution station.

FIG. **6** illustrates an example of an integrated fuel cap sensor for a mobile distribution station.

FIG. **7** illustrates an example of the routing of a sensor communication line through a reel in a mobile distribution station.

FIG. **8** illustrates an example of a mobile distribution station with an integrated floor pan.

FIG. **9** illustrates a system that can be used to remotely monitor and manage one or more mobile distribution stations.

FIG. **10** illustrates a workflow logic diagram that represents an example of a method for managing one or more mobile distribution stations.

FIG. **11** illustrates another workflow logic diagram that represents an example of a method for managing one or more mobile distribution stations.

DETAILED DESCRIPTION

FIG. **1** illustrates a mobile distribution station **20** and FIG. **2** illustrates an internal layout of the station **20**. As will be described, the station **20** may serve in a "hot-refueling" capacity to distribute fuel to multiple pieces of equipment while the equipment is running, such as fracking equipment at a well site. As will be appreciated, the station **20** is not limited to applications for fracking or for delivering fuel. The examples herein may be presented with respect to fuel delivery, but the station **20** may be used in mobile delivery of other fluids, in other gas/petroleum recovery operations, or in other operations where mobile refueling or fluid delivery will be of benefit.

In this example, the station **20** includes a mobile trailer **22**. Generally, the mobile trailer **22** is elongated and has first and second opposed trailer side walls W**1** and W**2** that join first and second opposed trailer end walls E**1** and E**2**. Most typically, the trailer **22** will also have a closed top (not shown). The trailer side walls W**1**/W**2** define a trailer width, TW. The mobile trailer **22** may have wheels that permit the mobile trailer **22** to be moved by a vehicle from site to site to service different hot-refueling operations.

In this example, the mobile trailer **22** has two compartments. A first compartment **24** includes the physical components for distributing fuel, such as diesel fuel, and a second compartment **26** serves as an isolated control room for managing and monitoring fuel distribution. The compartments **24**/**26** are separated by an inside wall **28***a* that has an inside door **28***b*. The second compartment **26** may be insulated with a fire resistant or retardant material **26***a*. In the event of a fire threat, a worker may take cover in the second compartment **26**. The fire resistant or retardant material **26***a* may shield the second compartment and thus temporarily protect the worker under such circumstances. The second compartment **26** may include an auxiliary escape door to provide external egress from the trailer **22**. Thus, if needed, a worker may exit the trailer **22** other than by the first compartment **24**.

The first compartment **24** includes one or more pumps **30**. Fuel may be provided to the one or more pumps **30** from an external fuel source, such as a tanker truck on the site. On the trailer **22**, the one or more pumps **30** are fluidly connected via a fuel line **32** with a high precision register **34** for metering fuel. The fuel line **32** may include, but is not limited to, hard piping. In this example, the fuel line **32** includes a filtration and air eliminator system **36***a* and one or more sensors **36***b*. Although optional, the system **36***a* is beneficial in many implementations, to remove foreign particles and air from the fuel prior to delivery to the equipment. The one or more sensors **36***b* may include a temperature sensor, a pressure sensor, or a combination thereof, which assist in fuel distribution management.

The fuel line **32** is connected with one or more manifolds **38**. In the illustrated example, the station **20** includes two manifolds **38** that arranged on opposed sides of the compartment **24**. As an example, the manifolds **38** are elongated tubes that are generally larger in diameter than the fuel line **32** and that have at least one inlet and multiple outlets. Each hose **40** is wound, at least initially, on a reel **42** that is rotatable to extend or retract the hose **40** externally through one or more windows of the trailer **22**. Each reel **42** has a reel diameter RD, which is the outside diameter or dimension of the reel **42**. Most typically, all or substantially all of the reels **42** will be the same size and thus have a common reel diameter RD. Each reel **42** may have an associated motor to mechanically extend and retract the hose **40**.

As shown in an isolated view in FIG. **3**, the reels **42** are mounted on a support rack **42***a*. In this example, the support rack **42***a* is configured with upper and lower rows of reels **42**. For instance, a ratio of the number of reels **42** in the upper row to a number of reels in the lower row on the support rack **42***a* is 1:1. As an example, each row has five reels **42** such that each support rack **42***a* provides ten reels **42** and thus ten hoses **40**. There are two support racks **42***a* (FIG. **2**) arranged on opposed sides of the first compartment **24**. The reels **42** are thus likewise arranged on opposed sides of the first compartment **24** in the trailer **22**. The station **20** therefore can provide twenty hoses **40** in the illustrated arrangement, with ten hoses **40** deployable on each side of the station **20**. For instance, the first group of ten hoses **40** on one side of the compartment **24** are deployable from the first trailer side wall W**1** and the second group of ten hoses **40** are deployable from the second trailer side wall W**2**. As will be appreciated, fewer or additional reels and hoses may be used in alternative examples.

An aisle walkway (A) runs down the middle of the trailer **22**. In this example, the aisle walkway A runs between the support racks **42***a* from an outside door E to the inside door **28***b*. Most typically, the aisle walkway A will include the space or volume through which workers walk to operate the station **20**. The aisle walkway A has an aisle width A**1**. As an example, the aisle width A**1** is the largest constant width walkway down the trailer **22** adjacent at least the reels **42** that is not intruded upon by affixed equipment in the trailer **22**, such as the reels **42**, support racks **42***a*, other support structures, etc.

The size of the aisle width A can contribute to reducing the potential for undesired incidents. For instance, there may be two or three or more workers that walk up and down the aisle walkway A in connection with their job duties. The workers need space to potentially pass by each other in the aisle walkway A and carry equipment through the aisle walkway A without bumping into each other or into equipment affixed in the trailer **22**.

The aisle width A**1**, however, is not unlimited and is subject to space availability and other factors relating to the performance of the station **20**. For instance, the reel diameter RD relates to the lengths of hoses that can be stored on the reels **42**. A relatively large reel diameter RD can accommodate a long hose winding, while a relatively smaller reel diameter RD would only accommodate a shorter hose winding. Longer hoses potentially provide greater access to

equipment on a site that is located farther from the station, but longer hoses require more space in a station than shorter hoses due to the size of the reel needed to wind the longer hose. There is thus a multi-faceted interplay between the size and number of reels, arrangement of reels, and size/location of an aisle.

In a middle aisle arrangement as with the aisle walkway A, the aisle width A**1** is greater than the reel diameter RD by a factor of at least 1.3. In a further example, the aisle width A**1** is greater than the reel diameter RD by a factor of at least 1.5, and the trailer width TW is no greater than about 96 inches.

Additionally or alternatively, in a further example, a ratio of the trailer width TW to the aisle width A**1** is no greater than 5. In a further example, the ratio of the trailer width TW to the aisle width A**1** is also greater than 2. In a further example, the ratio of the trailer width TW to the aisle width A**1** is also equal to or less than 4. In a further example, the trailer width TW is no greater than about 96 inches and the ratio of the trailer width TW to the aisle width A**1** is greater than 2 and no greater than 5. In a further example of any of the examples herein, the aisle width A**1** is between about 30 inches and about 38 inches. The parameters above provide good station performance in combination with good packaging in the trailer **22** and good aisle size for worker movement.

As shown in a representative example in FIG. **4**, each hose **40** is connected to a respective one of the reels **42** and a respective one of a plurality of control valves **44**. For example, a secondary fuel line **46** leads from the manifold **38** to the reel **42**. The control valve **44** is in the secondary fuel line **46**. The control valve **44** is moveable between open and closed positions to selectively permit fuel flow from the manifold **38** to the reel **42** and the hose **40**. For example, the control valve **44** is a powered valve, such as a solenoid valve.

In the illustrated example, the first compartment **24** also includes a sensor support rack **48**. The sensor support rack **48** holds integrated fuel cap sensors **50** (when not in use), or at least portions thereof. When in use, each integrated fuel cap sensor **50** is temporarily affixed to a piece of equipment (i.e., the fuel tank of the equipment) that is subject to the hot-refueling operation. Each hose **40** may include a connector end **40***a* and each integrated fuel cap sensor **50** may have a corresponding mating connector to facilitate rapid connection and disconnection of the hose **40** with the integrated fuel cap sensor **50**. For example, the connector end **40***a* and mating connector on the integrated fuel cap sensor **50** form a hydraulic quick-connect.

At least the control valves **44**, pump or pumps **30**, sensor or sensors **36***b*, and register **34** are in communication with a controller **52** located in the second compartment **26**. As an example, the controller **52** includes software, hardware, or both that is configured to carry out any of the functions described herein. In one further example, the controller **52** includes a programmable logic controller with a touch-screen for user input and display of status data. For example, the screen may simultaneously show multiple fluid levels of the equipment that is being serviced.

When in operation, the integrated fuel cap sensors **50** are mounted on respective fuel tanks of the pieces of equipment that are subject to the hot-refueling operation. The hoses **40** are connected to the respective integrated fuel cap sensors **50**. Each integrated fuel cap sensor **50** generates signals that are indicative of the fuel level in the fuel tank of the piece of equipment on which the integrated fuel cap sensor **50** is mounted. The signals are communicated to the controller **52**.

The controller **52** interprets the signals and determines the fuel level for each fuel tank of each piece of equipment. In response to a fuel level that falls below a lower threshold, the controller **52** opens the control valve **44** associated with the hose **40** to that fuel tank and activates the pump or pumps **30**. The pump or pumps **30** provide fuel flow into the manifolds **38** and through the open control valve **44** and reel **42** such that fuel is provided through the respective hose **40** and integrated fuel cap sensor **50** into the fuel tank. The lower threshold may correspond to an empty fuel level of the fuel tank, but more typically the lower threshold will be a level above the empty level to reduce the potential that the equipment completely runs out of fuel and shuts down. The controller **52** can also be programmed with a failsafe measure related to the operation of the fuel cap sensors **50**. As an example, once a control valve **44** is open, if the controller **52** does not detect a change in fuel level from the fuel cap sensor **50** associated with the control valve **44** within a preset time period, the controller **52** shuts the pump **30** off and closes the control valve **44**. Thus, if a hose **40** were to rupture, spillage of fuel is limited to the volume of fuel in the hose **40**. For instance, the preset time period may be three seconds, six seconds, ten seconds, or fifteen seconds, which may limit spillage to approximately fifteen gallons for a given size of hose.

The controller **52** also determines when the fuel level in the fuel tank reaches an upper threshold. The upper threshold may correspond to a full fuel level of the fuel tank, but more typically the upper threshold will be a level below the full level to reduce the potential for overflow. In response to reaching the upper threshold, the controller **52** closes the respective control valve **44** and ceases the pump or pumps **30**. If other control valves **44** are open or are to be opened, the pump or pumps **30** may remain on. The controller **52** can also be programmed with an electronic stop failsafe measure to prevent over-filling. As an example, once an upper threshold is reached on a first tank and the control valve **44** is closed, but the pump **30** is otherwise to remain on to fill other tanks, if the fuel level continues to rise in the first tank, the controller **52** shuts the pump **30** off.

Multiple control valves **44** may be open at one time, to provide fuel to multiple fuel tanks at one time. Alternatively, if there is demand for fuel from two or more fuel tanks, the controller **52** may sequentially open the control valves **44** such that the tanks are refueled sequentially. For instance, upon completion of refueling of one fuel tank, the controller **52** closes the control valve **44** of the hose **40** associated with that tank and then opens the next control valve **44** to begin refueling the next fuel tank. Sequential refueling may facilitate maintaining internal pressure in the manifold and fuel line **32** above a desired or preset pressure threshold to more rapidly deliver fuel. Similarly, the controller **52** may limit the number of control valves **44** that are open at any one instance in order to maintain the internal pressure in the manifold and fuel line **32** above a desired or preset threshold. The controller **52** may perform the functions above while in an automated operating mode. Additionally, the controller **52** may have a manual mode in which a user can control at least some functions through the PLC, such as starting and stopped the pump **30** and opening and closing control valves **44**. For example, manual mode may be used at the beginning of a job when initially filling tanks to levels at which the fuel cap sensors **50** can detect fuel and/or during a job if a fuel cap sensor **50** becomes inoperable. Of course, operating in manual mode may deactivate some automated functions, such as filling at the low threshold or stopping at the high threshold.

In addition to the use of the sensor signals to determine fuel level, or even as an alternative to use of the sensor signals, the refueling may be time-based. For instance, the fuel consumption of a given piece of equipment may be known such that the fuel tank reaches the lower threshold at known time intervals. The controller **52** is operable to refuel the fuel tank at the time intervals rather than on the basis of the sensor signals, although sensor signals may also be used to verify fuel level.

The controller **52** also tracks the amount of fuel provided to the fuel tanks. For instance, the register **34** precisely measures the amount of fuel provided from the pump or pumps **30**. As an example, the register **34** is an electronic register and has a resolution of about 0.1 gallons. The register **34** communicates measurement data to the controller **52**. The controller **52** can thus determine the total amount of fuel used to very precise levels. The controller **52** may also be configured to provide outputs of the total amount of fuel consumed. For instance, a user may program the controller **52** to provide outputs at desired intervals, such as by worker shifts or daily, weekly, or monthly periods. The outputs may also be used to generate invoices for the amount of fuel used. As an example, the controller **52** may provide a daily output of fuel use and trigger the generation of an invoice that corresponds to the daily fuel use, thereby enabling almost instantaneous invoicing.

In a further example, the integrated fuel cap sensors **50** are each hard-wired to the controller **52**. The term "hard-wired" or variations thereof refers to a wired connection between two components that serves for electronic communication there between, which here a sensor and a controller. The hard-wiring may facilitate providing more reliable signals from the integrated fuel cap sensors **50**. For instance, the many pieces of equipment, vehicles, workers, etc. at a site may communicate using wireless devices. The wireless signals may interfere with each other and, therefore, degrade communication reliability. Hard-wiring the integrated fuel cap sensors **50** to the controller **52** facilitates reduction in interference and thus enhances reliability.

In general, hard-wiring in a hot-refueling environment presents several challenges. For example, a site has many workers walking about and typically is located on rough terrain. Thus, as will be described below, each integrated fuel cap sensor **50** is hard-wired through the associated hose **40** to the controller **52**.

FIG. **5** illustrates a representative portion of one of the hoses **40** and, specifically, the end of the hose **40** that will be located at the fuel tank of the equipment being refueled. In this example, the hose **40** includes a connector **60** at the end for detachably connecting the hose **40** to the integrated fuel cap sensors **50**. The hose **40** is formed of a tube **62** and a sleeve **64** that circumscribes the tube **62**. As an example, the tube **62** may be a flexible elastomeric tube and the sleeve **64** may be a flexible fabric sleeve. The sleeve **64** is generally loosely arranged around the tube **62**, although the sleeve **64** may closely fit on the tube **62** to prevent substantial slipping of the sleeve **64** relative to the tube **62** during use and handling. Optionally, to further prevent slipping and/or to secure the sleeve **64**, bands may be tightened around the hose **40**. As an example, one or more steel or stainless steel bands can be provided at least near the ends of the hose **40**.

A plurality of sensor communication lines **66** (one shown) are routed with or in the respective hoses **40**. For instance, each line **66** may include a wire, a wire bundle, and/or multiple wires or wire bundles. In one further example, the line **66** is a low milli-amp intrinsic safety wiring, which serves as a protection feature for reducing the concern for operating electrical equipment in the presence of fuel by limiting the amount of thermal and electrical energy available for ignition. In this example, the line **66** is routed through the hose **40** between (radially) the tube **62** and the sleeve **64**. The sleeve **64** thus serves to secure and protect the line **66**, and the sleeve **64** may limit spill and spewing if there is a hose **40** rupture. In particular, since the line **66** is secured in the hose **40**, the line **66** does not present a tripping concern for workers. Moreover, in rough terrain environments where there are stones, sand, and other objects that could damage the line **66** if it were free, the sleeve **64** shields the line **66** from direct contact with such objects. In further examples, the line **66** may be embedded or partially embedded in the tube **62** or the sleeve **64**.

In this example, the line **66** extends out from the end of the hose **40** and includes a connector **68** that is detachably connectable with a respective one of the integrated fuel cap sensors **50**. For example, FIG. **6** illustrates a representative example of one of the integrated fuel cap sensors **50**. The integrated fuel cap sensor **50** includes a cap portion **50***a* and a fluid level sensor portion **50***b*. The cap portion **50***a* is detachably connectable with a port of a fuel tank. The cap portion **50***a* includes a connector port **50***c*, which is detachably connectable with the connector **60** of the hose **40**. The sensor portion **50***b* includes a sensor **50***d* and a sensor port **50***e* that is detachably connectable with the connector **68** of the line **66**. The fuel cap sensor **50** may also include a vent port that attaches to a drain hose, to drain any overflow into a containment bucket and/or reduce air pressure build-up in a fuel tank. Thus, a user may first mount the cap portion **50***a* on the fuel tank of the equipment, followed by connecting the hose **40** to the port **50***c* and connecting the line **66** to the port **50***e*.

The sensor **50***d* may be any type of sensor that is capable of detecting fluid or fuel level in a tank. In one example, the sensor **50***d* is a guided wave radar sensor. A guided wave radar sensor may include a transmitter/sensor that emits radar waves, most typically radio frequency waves, down a probe. A sheath may be provided around the probe. For example, the sheath may be a metal alloy (e.g., stainless steel or aluminum) or polymer tube that surrounds the probe. One or more bushings may be provided between the probe and the sheath, to separate the probe from the sheath. The sheath shields the probe from contact by external objects, the walls of a fuel tank, or other components in a fuel tank, which might otherwise increase the potential for faulty sensor readings. The probe serves as a guide for the radar waves. The radar waves reflect off of the surface of the fuel and the reflected radar waves are received into the transmitter/sensor. A sensor controller determines the "time of flight" of the radar waves, i.e., how long it takes from emission of the radar waves for the radar waves to reflect back to the transmitter/sensor. Based on the time, the sensor controller, or the controller **52** if the sensor controller does not have the capability, determines the distance that the radar waves travel. A longer distance thus indicates a lower fuel level (farther away) and a shorter distance indicates a higher fuel level (closer).

The line **66** routes through the hose **40** and back to the reel **42** in the trailer **22**. For example, the line **66** is also routed or hard-wired through the reel **42** to the controller **52**. FIG. **7** illustrates a representative example of the routing in the reel **42**. In this example, the reel **42** includes a spindle **42***b* about which the reel is rotatable. The spindle **42***b* may be hollow, and the line **66** may be routed through the spindle **42***b*. The reel **42** may also include a connector **42***c* mounted

thereon. The connector **42***c* receives the line **66** and serves as a port for connection with another line **66***a* to the controller **52**.

The lines **66***a* may converge to one or more communication junction blocks or "bricks" prior to the controller **52**. The communication junction blocks may serve to facilitate the relay of the signals back to the controller **52**. The communication junction blocks may alternatively or additionally serve to facilitate identification of the lines **66**, and thus the signals, with respect to which of the hoses a particular line **66** is associated with. For instance, a group of communication junction blocks may have unique identifiers and the lines **66** into a particular communication junction block may be associated with identifiers. A signal relayed into the controller **52** may thus be associated with the identifier of the communication junction blocks and a particular line **66** of that communication junction block in order to identify which hose the signal is to be associated with. The valves **44** may also communicate with the controller **52** in a similar manner through the communication junction blocks.

As illustrated in a further example in FIG. **8**, the station **20** may be further enhanced to reduce the potential for fluid or fuel escape. The trailer **22**, depicted here in phantom, includes a floor pan **80**. The floor pan **80** may be formed of metal, polymer, or combinations thereof and serves to reduce or prevent the escape of fluid or fuel from inside the trailer **22**. In comparison to a temporary, moveable catch basin, the floor pan **80** is a permanent fixture in the trailer **22**, and may be structurally affixed in the trailer **22** by fasteners, adhesive, or the like.

As an example, the floor pan **80** includes a bottom **80***a* that joins sides **80***b* to define a container cavity **80***c*. For instance, the floor pan **80** lines the bottom portion of the trailer **22**. The bottom **80***a* and sides **80***b* seal the container cavity **80***c* such that any fluid or fuel that leaks in the trailer **22** is caught and contained in the floor pan **80**, to reduce the potential of spilling or leaking out from the trailer **22**. The floor pan **80** may line only the first compartment **24** or may line both the first and second compartments **24**/**26**. In alternative examples, the floor pan **80** may line only a portion of the trailer **22** where there is potential for leak or spill. Most typically, the floor pan **80** will cover a majority of the floor area of the trailer **22** or at least a majority of the first compartment **24**. In further examples, a ratio of the width of the floor pan **80** to the minimum height of the sides **80***b* is no less than 16 and may be up to about 50. In yet a further example, the cavity **80***c* of the floor pan **80** has a volume of approximately two-hundred gallons and the minimum height of the sides **80***b* is no less than two inches.

Optionally, the floor pan **80** may include one or more drain ports in the bottom **80***a*, sides **80***b*, or both, to permit controlled drainage of spilled fluid or fuel from the floor pan **80** into a catch container.

As can be appreciated from the examples herein, the station **20** permits continuous hot-refueling with enhanced reliability. While there might generally be a tendency to choose wireless sensor communication for convenience, a hard-wired approach mitigates the potential for signal interference that can arise with wireless. Moreover, by hard-wiring the sensors through the hoses to the controller, wired communication lines are protected from exposure and do not pose additional concerns for workers on a site. Additionally, the spatial layout of the station **20** permits enhanced station performance in combination with good packaging and aisle size for worker movement.

FIG. **9** illustrates a system **69** for remotely monitoring and/or managing at least one mobile distribution station **20** (A). It is to be appreciated that the system **69** may include additional mobile distribution stations, shown in phantom at **20** (B), **20** (C), and **20** (D) (collectively mobile distribution stations **20**), for example. The mobile distribution stations **20** may be located at a single work site or located across several different work sites S**1** and S**2**. Each mobile distribution station **20** is in communication with one or more servers **71** that are remotely located from the mobile distribution stations **20** and work sites S**1**/S**2**. In most implementations, the communication will be wireless.

The server **71** may include hardware, software, or both that is configured to perform the functions described herein. The server **71** may also be in communication with one or more electronic devices **73**. The electronic device **73** is external of or remote from the mobile fuel distribution stations **20**. For example, the electronic device **73** may be, but is not limited to, a computer, such as a desktop or laptop computer, a cellular device, or tablet device. The electronic device **73** may communicate and interact in the system **69** via data connectivity, which may involve internet connectivity, cellular connectivity, software, mobile application, or combinations of these.

The electronic device **73** may include a display **73***a*, such as an electronic screen, that is configured to display the fuel operating parameter data of each of the mobile distribution stations **20**. As an example, the electronic device **73** may display in real-time the operating parameter data of each of the mobile distribution stations **20** in the system **69** to permit remote monitoring and management control of the mobile distribution stations **20**. For instance, the operating parameter data may include fuel temperature, fuel pressure, fuel flow, total amount of fuel distributed, operational settings (e.g., low and high fuel level thresholds), or other parameters.

The server **71** may also be in communication with one or more cloud-based devices **75**. The cloud-based device **75** may include one or more servers and a memory for communicating with and storing information from the server **71**.

The server **71** is configured to communicate with the mobile distribution stations **20**. Most typically, the server **71** will communicate with the controller **52** of the mobile distribution station **20**. In this regard, the controller **52** of each mobile distribution station **20** may be include hardware, software, or both that is configured for external communication with the server **71**. For example, each controller **52** may communicate and interact in the system **69** via data connectivity, which may involve internet connectivity, cellular connectivity, software, mobile application, or combinations of these.

The server **71** is configured to receive operating parameter data from the mobile distribution stations **20**. The operating parameter data may include or represent physical measurements of operating conditions of the mobile distribution station **20**, status information of the mobile distribution station **20**, setting information of the mobile distribution station **20**, or other information associated with control or management of the operation of the mobile distribution station **20**.

For example, the server **71** utilizes the information to monitor and auto-manage the mobile distribution station **20**. The monitoring and auto-management may be for purposes of identifying potential risk conditions that may require shutdown or alert, purposes of intelligently enhancing operation, or purposes of reading fuel or fluid levels in real-time via the sensors **50**. As an example, the server **71**

may utilize the information to monitor or display fuel or fluid levels, or determine whether the fuel operating parameter data is within a preset limit and send a control action in response to the operating parameter data being outside the preset limit. As will described in further detail below, the control action may be a shutdown instruction to the mobile fuel distribution stations **20**, an adjustment instruction to the mobile fuel distribution stations **20**, or an alert to the electronic device **73**.

FIG. **10** illustrates a workflow logic diagram of an example control method **77** which can be implemented with the system **69** or with other configurations of one or more mobile distribution stations **20** and one or more servers. In general, the illustrated method **77** can be used to provide a shutdown instruction or an alert if operating parameter data of one or more mobile distribution stations **20** is outside of a preset limit. For instance, if fuel pressure or fuel temperature in one of the mobile distribution stations **20** exceeds one or more limits, the method **77** shuts down the mobile distribution station **20** and/or sends an alert so that appropriate action can, if needed, be taken in response to the situation. In particular, in hot-refueling implementations, the ability to automatically shut down or to provide a remote alert may facilitate enhancement of reliable and safe operation.

Referring to FIG. **10**, one or more current or instantaneous operating parameters are read (i.e., by the controller **52**). An operating parameter may include, but is not limited to, fuel temperature and fuel pressure. Other parameters may additionally or alternatively be used, such as pump speed or power and fuel flow. Parameters may be first order parameters based on first order readings from sensor signals, or second order parameters that are derived or calculated from first order parameters or first order sensor signals. For instance, temperature is a first order parameter and direct detection of temperature to produce signals representative of temperature constitute first order sensor signals. The product of temperature and pressure, for example, is a second order parameter that is based on first order sensor signals of each of temperature and pressure. As will be appreciated, there may be additional types of second order parameters based on temperature, pressure, power, flow, etc., which may or may not be weighted in a calculation of a second order parameter.

In this example, the current operating parameter is compared with a prior operating parameter stored in memory in the controller **52**. A difference in the current operating parameter and the prior operating parameter is calculated to produce a change (delta) value in the operating parameter. The change value is used as the operating parameter data for control purposes in the method **77**. The operating parameter data thus represents the change in the operating parameter from the prior reading to the current reading. Use of the change value as the operating parameter data serves to reduce the amount of data that is to be sent in connection with the method **77**. For example, the actual operating parameter values may be larger than the change values and may thus require more memory and bandwidth to send than the change values. The change values are sampled and calculated at a predesignated interval rate. In this example, the interval rate is once per second. Each operating parameter is stored in memory for use as the next "prior" operating parameter for comparison with a subsequent "new" operating parameter reading. The controller **52** may be programmed to perform the above steps. As will be appreciated, the steps above achieve data efficiency, and actual values could alternatively or additionally be used if memory and bandwidth permit.

Each operating parameter data reading (i.e., change value) is published or sent via IoT (Internet of Things) Gateway to an IoT Platform, which may be implemented fully or partially on the server **71** and cloud device **75**. The operating parameter data may also contain additional information, such as but not limited to, metadata with time stamp information and identification of the individual mobile distribution station **20**. In this example, the operating parameter data of interest is associated with fuel pressure and fuel temperature. In the method **77**, the operating parameter data for fuel temperature and fuel pressure are compared to, respectively, a preset fuel temperature shutdown limit and a preset fuel pressure shutdown limit. The shutdown limits may be temperature and pressure limits corresponding to rated limits of the pump **30**, fuel line **32**, and manifold **38**, for example.

If the temperature or pressure are outside of the preset fuel temperature or pressure shutdown limits, the method **77** initiates a shutdown event. In this example, the shutdown event includes identifying the particular mobile distribution station **20** associated with the temperature or pressure that is outside of the preset limit, forming a shutdown instruction message, and publishing or sending the shutdown instruction message via the IoT Gateway to the corresponding identified mobile distribution station **20**.

Upon receiving the shutdown instruction message, the controller **52** of the identified mobile distribution station **20** validates and executes the shutdown instruction. For instance, shutdown may include shutting off the pump **30** and closing all of the control valves **44**. In this example, the method **77** includes a timing feature that waits for confirmation of shutdown. Confirmation may be generated by the controller **52** performing an electronic check of whether the pump **30** is off and the control valves **44** are closed. Confirmation may additionally or alternatively involve manual feedback via input into the controller **52** by a worker at the identified mobile distribution station **20**.

Once shutdown is confirmed by the controller **52**, confirmation of shutdown is published or sent via the Iot Gateway to the IoT Platform for subsequent issuance of an alert. If there is no confirmation of shutdown by a maximum preset time threshold, a non-confirmation of shutdown is published or sent for subsequent issuance of an alert.

If the temperature and/or pressure is not outside of the preset fuel temperature or pressure shutdown limits, the method **77** in this example continues to determine whether the fuel temperature and fuel pressure with are, respectively, outside of a preset fuel temperature threshold limit and a preset fuel pressure threshold limit. The threshold limits will typically be preset at levels which indicate a potential for shutdown conditions. For example, the threshold limits may be intermediate temperature or pressure levels which, if exceeded, may indicate an upward trend in temperature or pressure toward the shutdown limits. In one example, the threshold limits are rate of change thresholds. For instance, a change value in temperature and/or pressure that exceeds a corresponding threshold change limit may be indicative that temperature and/or pressure is rapidly elevating toward the shutdown condition.

In response to the temperature and/or pressure being outside of the preset fuel temperature or pressure threshold limits, the method **77** initiates an alert event. In this example, the alert event includes initiating an event notification. In the event notification, the method **77** conducts a lookup of notification channels and then issues an alert via one or more selected notification channels, such as an alert on the display **73***a*. As an example, the notification channels may be

selected by user preferences and may include alerts by email, SMS (short message service), and/or mobile device app notification (e.g., banners, badges, home screen alerts, etc.). The event notification is also used for alerts of confirmation and non-confirmation of shutdown. The method **77** thus provides capability to nearly instantaneously issue an alert that can be immediately and readily viewed in real-time on the electronic device **73** so that appropriate action, if needed, can be taken. In one example, such actions may include adjustment of operation settings of the mobile distribution station **20**, which may be communicated and implemented via the system **69** from the electronic device **73** to the mobile distribution station **20**.

FIG. **11** illustrates a workflow logic diagram of an example control management method **79** which can be implemented with the method **77** and with the system **69** or with other configurations of one or more mobile distribution stations **20** and one or more servers. For example, the method **79** is used to identify shutdown conditions and/or remotely intelligently auto-manage operation of one or more mobile distribution stations **20**. The initial portion of the method **79** with respect to generating operating parameters data may be similar to the method **77**; however, the method **79** uses the operating parameter data to calculate an efficiency score and identify shutdown conditions or other actions to be taken in response to the efficiency score. For example, the efficiency score is a second order parameter and is a calculation based on multiple fuel operating parameters selected from fuel temperature, fuel pressure, fuel flow, and time. The efficiency score is then compared to an efficiency score shutdown limit. If the calculated efficiency score exceeds the limit, the method **79** initiates the shutdown event as described above. As an example, the efficiency score is the product of a safety score multiplied by one or more of a temperature score, a pressure score, a flow rate score, a tank level score, or the sum of two or more of these scores. For instance, the efficiency score is as shown in Equation I below.

Efficiency Score=Safety Score×(Temperature Score+Pressure Score+Flow Rate Score+Tank Level Score). Equation I:

In one example, the safety score is a product of a safety factor and logic values of one or zero for each of the temperature score, the pressure score, the flow rate score, and the tank level score. Thus, if any of the temperature score, the pressure score, the flow rate score, or the tank level score fails, resulting in a logic value of zero, the efficiency score will be zero. In response to an efficiency score of zero, the method **79** initiates the shutdown event as described above. The logic values are assigned according to whether the given parameter is within a predetermined minimum/maximum range. If the parameter is within the range, the logic value is one and if the parameter is outside of the range, the value is zero. As an example, the safety score may be determined by:

Safety Score=(Safety Check Positive Response/Total Safety Checks)*(IF (Temperature Reading between MIN LIMIT and MAX LIMIT) THEN 1 ELSE 0))*(IF (Pressure Reading between MIN LIMIT and MAX LIMIT) THEN 1 ELSE 0))*(IF (Flow Rate Reading between MIN LIMIT and MAX LIMIT) THEN 1 ELSE 0))*(IF (Tank Inventory Reading between MIN LIMIT and MAX LIMIT) THEN 1 ELSE 0)),

wherein

Temperature Score=(((Temperature Reading−Min Limit)/Temperature Reading)+((Max Limit+Temperature Reading)/Temperature Reading)))/2,

Pressure Score=(((Pressure Reading−Min Limit)/Pressure Reading)+((Max Limit+Pressure Reading)/Pressure Reading)))/2,

Flow Rate Score=(((Flow Rate Reading−Min Limit)/Flow Rate Reading)+((Max Limit+Flow Rate Reading)/Flow Rate Reading)))/2, and

Tank Level Score=(((Tank Level Reading−Min Limit)/Tank Level Reading)+((Max Limit+Tank Level Reading)/Tank Level Reading)))/2.

In one example, the safety factor includes a calculation based on safety checks of a mobile distribution station **20**. For instance, the safety factor is the quotient of positive or passing safety checks divided by the total number of safety check made. A safety check may involve periodic validation of multiple parameters or conditions on the site of a station **20** and/or in the station **20**. As examples, the safety check may include validation that electrical power supply is fully functional (e.g., a generator), validation of oil levels (e.g., in a generator), validation of whether there are any work obstructions at the site, etc. Thus, each safety check may involve validation of a set of parameters and conditions. If validation passes, the safety check is positive and if validation does not pass the safety check is negative. As an example, if 5 safety checks are conducted for a station **20** and four of the checks pass and one does not pass, the safety factor is equal to four divided by five, or 0.8.

The method **79** also uses the efficiency score to actively intelligently auto-manage operation of one or more of the mobile distribution stations **20**. For example, the efficiency score is compared in the method **79** with an efficiency score threshold limit or efficiency score range. If the efficiency score is outside of the limit or range, the method **79** initiates an adjustment event to adjust settings of the operating parameters of the mobile distribution station **20**. For example, pumping rate or power may be changed to increase or decrease fuel pressure. In further examples in the table below, preset actions are taken in response to efficiency scores within preset ranges.

Efficiency Score	Action
<=1	SHUTDOWN
>1 AND <=2	ALERT
>2 AND <=3	ADJUST SETTINGS
>3 AND <=4	NO ACTION

The adjustment event may include forming an adjustment instruction message and publishing or sending the adjustment instruction message to the mobile distribution station **20** via the IoT Gateway. Upon receiving the adjustment instruction message the controller **52** of the mobile distribution station **20** validates and executes the message. The message constitutes a control action to change one or more of the operating parameters to move the efficiency score within the limit or range. As an example, pumping rate is changed to change fuel pressure. Other parameters may additionally or alternatively be adjusted to change the fuel efficiency score, such as but not limited to, fuel tank upper and lower thresholds, sequence of opening/closing control valves **44**, and number of control valves **44** that may be open

at one time. Thus, once implemented, the method **79** can serve to auto-adjust operation of one or more of the mobile distribution stations **20**, without human intervention, to achieve enhanced or optimize fuel distribution.

In one example, a rate of fuel consumption of one or more pieces of the equipment may be calculated, and the upper and/or lower fuel level threshold settings are changed in response to the calculated rate of fuel consumption. For instance, if consumption is lower or higher than a given fuel level threshold setting warrants, the fuel level threshold setting is responsively auto-adjusted up or down for more efficient operation. For a low consumption rate, there may be a downward adjustment of the lower fuel level threshold, since there is lower likelihood that the low consumption rate will lead to a fully empty condition in the equipment. Similarly, for a high consumption rate, there may be an upward adjustment of the lower fuel level threshold, since there is higher likelihood that the high consumption rate will lead to a fully empty condition in the equipment. Thus, the mobile distribution station **20** can be operated more efficiently and safely by distributing fuel at proper times to ensure filling the equipment with desired safety margins.

Similar to the shutdown instruction message described above, the method **79** may include a timing feature that waits for confirmation of adjustment. Once adjustment is confirmed by the controller **52**, confirmation of adjustment is published or sent via the Iot Gateway to the IoT Platform for subsequent issuance of an alert. If there is no confirmation of adjustment by a maximum preset time threshold, a non-confirmation of adjustment is published or sent for subsequent issuance of an alert. In further examples, the method **79** may exclude use of the efficiency score for purposes of shutdown or for purposes of intelligent auto-management. That is, the method **79** may employ the efficiency score for only one or the other of shutdown or intelligent auto-management.

Additionally or alternatively, the system **69** with one or more mobile distribution stations **20** and one or more servers may be used for centralized, intelligent auto-filling. For example, fuel levels may be tracked in real-time or near real-time. When a fuel level associated with one of the stations **20** reaches the lower threshold, described above, an instruction may be sent via the system **69** to active the pump **30** and open the appropriate control valve **44**. Moreover, the system **69** can ensure that there is minimal or zero delay time from the time of identifying the low threshold to the time that filling begins. Thus, at least a portion of the functionality of the controllers **52** may be remotely and centrally based in the server of the system **69**.

Although a combination of features is shown in the illustrated examples, not all of them need to be combined to realize the benefits of various embodiments of this disclosure. In other words, a system designed according to an embodiment of this disclosure will not necessarily include all of the features shown in any one of the Figures or all of the portions schematically shown in the Figures. Moreover, selected features of one example embodiment may be combined with selected features of other example embodiments.

The preceding description is exemplary rather than limiting in nature. Variations and modifications to the disclosed examples may become apparent to those skilled in the art that do not necessarily depart from this disclosure. The scope of legal protection given to this disclosure can only be determined by studying the following claims.

What is claimed is:

1. A distribution station comprising:

a mobile trailer;

a pump on the mobile trailer;

first and second manifolds on the mobile trailer and fluidly connected with the pump;

a plurality of reels on the mobile trailer;

a plurality of hoses connected, respectively, with the reels, wherein a portion of the reels are connected with the first manifold and another portion of the reels are connected with the second manifold;

a plurality of valves on the mobile trailer, each of the valves situated between one of the first or second manifolds and a respective different one of the hoses; and

a plurality of fluid level sensors, each of the fluid level sensors being associated a respective different one of the hoses,

wherein the reels are arranged on first and second opposed sides in the mobile trailer, with an aisle walkway down the middle of the mobile trailer.

2. The distribution station as recited in claim **1**, wherein the reels on each of the first and second opposed sides are arranged in upper and lower rows of reels.

3. The distribution station as recited in claim **2**, further comprising first and second support racks on which the reels are supported, the first support rack arranged on the first side and the second support rack arranged on the second side.

4. The distribution station as recited in claim **3**, wherein the aisle walkway has an aisle width and the reels have a reel diameter, and the aisle width is greater than the reel diameter by a factor of at least 1.3.

5. The distribution station as recited in claim **4**, wherein the trailer has a trailer width of no greater than about 96 inches.

6. The distribution station as recited in claim **2**, wherein a ratio of a number of reels in the upper row to a number of reels in the lower row is 1:1.

7. The distribution station as recited in claim **1**, wherein the mobile trailer includes trailer end wall that has an outside door, an inside wall that defines first and second compartments in the mobile trailer, the outside door opening into the first compartment, and at least the manifolds and the reels are in the first compartment.

8. The distribution station as recited in claim **7**, wherein the inside wall includes an inside door providing access between the first compartment and the second compartment, the aisle walkway extending from the outside door to the inside door.

9. The distribution station as recited in claim **7**, further comprising a controller in the second compartment, the controller configured to operate the valves.

10. The distribution station as recited in claim **9**, wherein the second compartment is insulated with a fire resistant or retardant material.

11. The distribution station as recited in claim **1**, wherein the aisle walkway has an aisle width and the reels have a reel diameter, and the aisle width is greater than the reel diameter by a factor of at least 1.3.

12. The distribution station as recited in claim **11**, wherein the aisle width is greater than the reel diameter by a factor of at least 1.5.

13. The distribution station as recited in claim **1**, wherein the aisle walkway has an aisle width and the mobile trailer has a trailer width, and a ratio of the trailer width to the aisle width is no greater than 5.

14. The distribution station as recited in claim **13**, wherein the ratio of the trailer width to the aisle width is greater than 2.

15. The distribution station as recited in claim **14**, wherein the ratio of the trailer width to the aisle width is equal to or less than 4.

16. The distribution station as recited in claim **1**, further comprising a floor pan in the mobile trailer.

17. A distribution station comprising:

a mobile trailer;

a pump on the mobile trailer;

first and second manifolds on the mobile trailer and fluidly connected with the pump;

a plurality of reels on the mobile trailer;

a plurality of hoses connected, respectively, with the reels, wherein a portion of the reels are connected with the first manifold and another portion of the reels are connected with the second manifold;

a plurality of valves on the mobile trailer, each of the valves situated between one of the first or second manifolds and a respective different one of the hoses; and

a plurality of fluid level sensors, each of the fluid level sensors being associated a respective different one of the hoses,

wherein the mobile trailer includes first and second opposed trailer side walls, and a first group of the hoses are deployable from the first trailer side wall and a second group of the hoses are deployable from the second trailer side wall.

18. The distribution station as recited in claim **17**, wherein the reels are arranged on first and second opposed sides in the mobile trailer such that there is an aisle walkway down the middle of the mobile trailer.

19. The distribution station as recited in claim **18**, wherein the reels on each of the first and second opposed sides are arranged in upper and lower rows of reels.

20. The distribution station as recited in claim **19**, wherein the aisle walkway has an aisle width and the reels have a reel diameter, and the aisle width is greater than the reel diameter by a factor of at least 1.3.

21. The distribution station as recited in claim **20**, wherein the mobile trailer has a trailer width of no greater than about 96 inches.

22. The distribution station as recited in claim **17**, further comprising a floor pan in the mobile trailer.

* * * * *