UNITED STATES PATENT AND TRADEMARK OFFICE

BEFORE THE PATENT TRIAL AND APPEAL BOARD

PELOTON INTERACTIVE, INC.,
Petitioner

v.

NEC CORPORATION,
Patent Owner

IPR Case No. IPR2023-01239
U.S. Patent No. 8,752,101

REVISED DECLARATION OF CLIFFORD READER, PH.D. IN SUPPORT OF PETITION FOR *INTER PARTES* REVIEW OF U.S. PATENT NO. 8,752,101

I hereby declare that all statements made herein of my own knowledge are true and that all statements made on information and belief are believed to be true; and further that these statements were made with the knowledge that willful false statements and the like so made are punishable by fine or imprisonment, or both, under Section 1001 of Title 18 of the United States Code.

Executed on December 5, 2023, in Escondido, California.

Clifford Reader, Ph.D.

TABLE OF CONTENTS

I. Introduction 1

II. Qualifications and Professional Background 4

A. Education 4

B. Summary 5

C. Work Experience 5

D. Standardization 6

E. Intellectual Property Rights 8

F. Curriculum Vitae 9

III. Rate Control Technologies 9

A. Digital Video 9

B. Video and Audio Coding 11

C. Video and Audio Transmission 13

D. Streaming over the Internet 15

E. Video Coding Standards 18

F. The Use of Buffers in Video Coding Standards 19

G. Synchronized Streaming to Multiple Recipients 25

IV. Relevant Legal Standards 26

V. Person of Ordinary Skill in the Art 29

VI. Overview of the Subject U.S. Patent No. 8,752,101 30

A. Field of Art 30

B. Background Art – Description of the Prior Art and Admitted Prior Art 30

C. Summary – the Alleged Invention of the ’101 Patent 31

D. Prosecution History of the ’101 Patent 34

E. The Examiner Erred By Allowing the Challenged Claims 34

VII. Summary of the Prior Art 35

A. US20060143678A1 (“Chou”) 35

B. US7606928 (“Wang”) 40

C. Admitted Prior Art 43

VIII. Claim Construction 44

IX. Ground I – The Challenged Claims Are Rendered Obvious By *Chou*. 45

A. Claim 1 45

B. Claim 2 83

C. Claim 4 88

D. Claim 5 91

E. Claim 7 94

F. Claim 11 96

G. Claim 12 98

H. Claim 14 98

I. Claim 15 98

J. Claim 16 98

K. Claim 17 100

L. Claim 18 100

M. Claim 20 101

N. Claim 21 101

O. Claim 22 103

P. Claim 23 104

Q. Claim 25 104

R. Claim 26 105

S. Claim 27 106

T. Claim 28 108

U. Claim 29 109

X. Ground II – Claims 1, 2, 4, 5, 7, 11, 12, 14-18, 20-23, 25-29 are Rendered Obvious by *Chou* in View of *Wang*. 110

A. Claim 1 110

B. Claims 2, 4, 5, 7, 11, 12, 14-18, 20-23, 25-29 117

XI. Ground III – Claims 5, 7, and 15 are Obvious under 35 U.S.C. § 103 Based on *Chou* in View of *Nobuyoshi* 117

A. Claim 5 117

B. Claim 7 119

C. Claim 15 120

XII. Motivation to Combine for Grounds II-III 121

A. Motivation to Combine for Ground II 121

B. Motivation to Combine for Ground III 128

I. Introduction

I, Dr. Clifford Reader, do hereby declare:

1. I am making this declaration as a technical expert at the request of Petitioner Peloton Interactive, Inc. ("Petitioner") in support of Petitioner's petition for *inter partes* review of U.S. Patent No. 8,752,101 ("the '101 patent," Ex1001).

2. I am being compensated for my work in this matter at my standard hourly rate of $750 for consulting services. My compensation in no way depends on the outcome of this proceeding or the content of my testimony. I have no financial interest in or affiliation with the Petitioner or the patent owner, which I understand is NEC Corporation ("Patent Owner).

3. In preparing this Declaration, I considered the following materials, which I am informed are also identified in the petitions:

Exhibit No.	Description
EX1001	U.S. Patent No. 8,752,101 B2 ("the '101 patent")
EX1002	File History of U.S. Patent No. 8,752,101 B2 (U.S. Application No. 13/508,025) ("'101 FH")
EX1003	Lee, Chiang, and Zhang, *Scalable Rate Control For MPEG-4 Video*, IEEE Transactions on Circuits and Systems for Video Technology, Vol. 10, No. 6, pp. 878 – 894, September 2000
EX1004	U.S. Publication No. US 2006/0143678 A1 ("Chou")
EX1005	File History of corresponding European Patent No. 2498492
EX1006[1]	SEALED Revised Dr. Clifford Reader Declaration ("Reader Declaration")
EX1007	International Publication No. WO 2006/108435 ("Kampmann")

[1] A redacted, public version of the Reader Declaration is provided as EX1037.

Exhibit No.	Description
EX1008	Japanese Unexamined Patent Application Publication No. 2005-191786
EX1009	Japanese Unexamined Patent Application Publication No. 2007-13705
EX1010	U.S. Patent No. 8,909,809 (the '809 patent")
EX1011	Japanese Unexamined Patent Application Publication No. 2004-172830
EX1012	Certified English Translation of Japanese Unexamined Patent Application Publication No. 2004-172830
EX1013	Certified English Translation of Japanese Unexamined Patent Application Publication No. 2005-191786
EX1014	Certified English Translation of Japanese Unexamined Patent Application Publication No. 2007-13705
EX1015	Kozamernik, *Webcasting - The Broadcasters' Perspective*, EBU Technical Review, March 2000 ("Kozamernik")
EX1016	U.S. Patent No. 7,606,928 ("Wang")
EX1017	U.S. Patent No. US 6,637,031 B1 ("Chou '031")
EX1018	Cen, Pu, and Walpole, *Flow And Congestion Control for Internet Streaming Applications*, Multimedia Computing and Networking 1998
EX1019	Lu, *Signal Processing for Internet Video Streaming: A Review*, Proceedings of SPIE, Volume 3947, p. 246-259, January 2000 ("Lu")
EX1020	Haskell, Puri, and Netravali, *Digital Video: An Introduction to MPEG-2*, chapter 8, pp. 156-182 ("Haskell")
EX1021	ITU H.262 (07/95)
EX1022	Ebrahimi, *MPEG-4 natural video coding – An overview*, Signal Processing: Image Communication, V.15 Iss. 4-5, Jan. 2000, pp. 365-385 ("Ebrahimi")
EX1023	ITU H.261 (03/93)
EX1024	ITU H.222.0 (07/95)
EX1025	Ruiu, *An Overview of MPEG-2*, The 1997 Digital Video Test Symposium
EX1026	Huang, Chou, Klemets, *Optimal Coding Rate Control for Scalable Streaming Media* ("Huang")
EX1027	U.S. Publication No. US 2004/0128396 A1 ("Patrick")
EX1028	U.S. Patent No. US 7,711,841 B2 ("Desphande")

Exhibit No.	Description
EX1029	van Beek and Demircin, *Delay-Constrained Rate Adaptation for Robust Video Transmission Over Home Networks*, IEEE International Conference, V.2, ("van Beek")
EX1030	U.S. Patent No. 5,822,524 ("Chen")
EX1031	NEC's Infringement Contentions served in *NEC Corp. v. Peloton Interactive, Inc.*, No. 1:22-cv-00987-CFC (U.S. District Court, District of Delaware, filed July 28, 2022)
EX1032	Reader C., "Intraframe and Interframe Adaptive Transform Coding", SPIE Vol. 66, 1975
EX1033	Reader C, "MPEG4: Coding for Content, Interactivity, and Universal Accessibility", Optical Engineering, Vol. 35, No. 1, pp. 104-108, Jan 1996
EX1034	"MPEG Video Compression Standard", Edited by J. L. Mitchell et al, Chapter 16, "MPEG Patents", pp.357-362
EX1035	Proposal and Consideration of Buffer Size, NTT, KDD, NEC, Fujitsu, CCITT SG IV Working Party XV/l Specialist Group on coding for Visual Telephony, Document #287, January 1988
EX1036	Scheduling Order filed on March 20, 2023 in *NEC Corp. v. Peloton Interactive, Inc.*, No. 1:22-cv-00987-CFC (U.S. District Court, District of Delaware, filed July 28, 2022)
EX1037	REDACTED PUBLIC version of revised Reader Declaration
EX1038	U.S. Patent No. 5,867,230 ("Wang '230")

4. I understand that the '101 patent issued from U.S. Patent Application No. 13/508,025, filed on May 3, 2012. I also understand that the application was a national-stage filing of Patent Cooperation Treaty Application No. PCT/JP2010/006067, filed on October 13, 2010, and claimed priority to Japanese Patent Application No. JP2009-253581, filed on November 5, 2009. I have been asked to treat November 5, 2009 as the effective filing date of the '101 patent.

5. I am informed by counsel that Petitioner is requesting *inter partes* review and cancellation of claims 1, 2, 4, 5, 7, 11, 12, 14-18, 20-23, 25-29 (the "Challenged Claims") of the '101 patent on the following grounds:

Grounds	Claims	Statutory Basis	Prior Art
1	1, 2, 4, 5, 7, 11, 12, 14-18, 20-23, 25-29	§103	*Chou*
2	1, 2, 4, 5, 7, 11, 12, 14-18, 20-23, 25-29	§103	*Chou* in view of *Wang*
3	5, 7, 15	§103	*Chou* in view of *Nobuyoshi*

6. I am also informed by counsel that the '101 patent is presently the subject of a patent infringement lawsuit brought by Patent Owner, who is also the assignee of the '101 patent, against Petitioner and captioned *NEC Corp. v. Peloton Interactive, Inc.*, No. 1:22-cv-00987-CFC (U.S. District Court, District of Delaware, filed July 28, 2022) (the "Related Litigation").

II. Qualifications and Professional Background

A. Education

7. I received my Doctoral degree in 1974 from the University of Sussex, England. My thesis was titled "Orthogonal Transform Coding of Still and Moving

Pictures". The research for my thesis was performed in residence at the Image Processing Institute, University of Southern California, Los Angeles.

8. I received my B. Eng. Degree with Honors in 1970 from the University of Liverpool, England, in the field of electronics.

B. Summary

9. I am a digital media consultant providing technical, business development and intellectual property consulting services in the areas of digital media including digital imaging, digital video, digital audio and digital speech. Applications include consumer audio and video transmission and storage, video, audio and speech compression, real-time video processing and display, digital speech processing, image/video/audio systems architecture, and image/video/audio chip architecture. I have been providing digital media consulting services since 2001.

C. Work Experience

10. From 1970 to 1973 I performed my graduate research in video compression. I was one of the first to perform a type of image coding (adaptive block transform coding) and the first to apply this type of coding to video. This is described in my thesis and summarized in an SPIE paper[2]. These techniques

[2] EX1032 (Reader C., "Intraframe and Interframe Adaptive Transform Coding", SPIE Vol. 66, 1975).

underlie the audiovisual coding standards known as MPEG (Moving Picture Experts Group), H.26x, and virtually all other video compression schemes today.

11. From 1975 to 1981 I studied, designed and developed systems for military imaging systems including realtime image and video reconnaissance systems and battlefield management systems.

12. During this time, I designed and prototyped a packet-switched network for video data transmission.

13. In the early 1980s I taught classes at Santa Clara University, California in digital signal processing and digital image processing.

14. From 1982 to 1989 I architected and led hardware and software engineering teams in the design of systems for realtime imaging for military, medical and earth resources applications.

15. From 1990 to 2001 I architected and led hardware and software engineering teams in the design of semiconductor chips and systems for realtime imaging in digital consumer audio/video applications, including videoconferencing (with speech coding), broadcast TV and DVD.

D. Standardization

16. In 1990 I became an accredited delegate to the Moving Picture Experts Group – MPEG. I and my team contributed to the technical work for all three parts

of the standard – Systems, Video and Audio – and I participated in the management of MPEG.

17. I was Head of Delegation (HoD) to MPEG for the United States from 1991 to 1992, and Editor in Chief of the MPEG1 standard. I personally reviewed and edited all three parts of the standard in detail, and wrote much of the informative annex for the MPEG1 standard.

18. During this time I formed a team that implemented the nascent MPEG Systems specification and conducted an experiment that confirmed the precise synchronization of audio and video data streams according to the rate buffer model of the emerging standard specification.

19. I chaired the implementation subcommittee that analyzed MPEG1 Audio (Levels I & II aka MUSICAM; Level III aka mp3), Dolby AC3 and other proposed audio compression algorithms including legacy algorithms for complexity and cost of implementation.

20. I was a co-founder of the MPEG4 standard and chaired the subcommittee from inception for 2-1/2 years, beginning in 1993, following which I chaired the MPEG4 Requirements subcommittee for a further 2 years. These subcommittees established many of the fundamental principles of the MPEG4 standard, including object-based coding, software-based implementation, and

development of the bitstream as a syntactic language[3]. MPEG4 focused on audiovisual low bitrate coding, including low bitrate speech coding.

21. During this time I participated in the development of the MPEG Fil Format mp4, and standards for transmission of video over IP networks.

E. Intellectual Property Rights

22. In 1992-1993 I was hired by CableLabs to be the technical expert for establishing the MPEG Patent Pool (Now MPEGLA). In the course of creating a list of essential IP to practice the standard, I reviewed approximately 10,000 abstracts and 1,000 patents. This is summarized in a chapter of the MPEG book by Mitchell et al.4

23. In 2002 I was hired by 10 companies to evaluate the standards essential patent environment for the nascent H.264 standard. I was an invited expert to the Joint Video Team (JVT) established by ISO and ITU to develop the H.264 standard (also denoted MPEG4 Pt. 10, AVC).

24. In 2003 I was hired to evaluate the standards essential patent environment for the nascent national China AVS standards.

---

[3] EX1033 (Reader C, "MPEG4: Coding for Content, Interactivity, and Universal Accessibility", Optical Engineering, Vol. 35, No. 1, pp. 104-108, Jan 1996).
[4] EX1034 ("MPEG Video Compression Standard", Edited by J. L. Mitchell et al, Chapter 16, "MPEG Patents", pp.357-362).

25. In 2013 I was hired to evaluate the standards essential patent environment for the emerging AV1 standard

26. In 2017 I was hired to evaluate the standards essential patent environment for the H.265/HEVC standard.

F. Curriculum Vitae

27. Additional information concerning my professional publications and presentations in the field of digital video and cases in which I have served as an expert are set forth in my current Curriculum Vitae, a copy of which is attached as Exhibit A. This Curriculum Vitae lists many publications authored or co-authored by me; and lists the cases in which I have testified via depositions and trials.

III. Rate Control Technologies

28. Below I describe the state of audiovisual data rate control as of the '101 patent's effective filing date, and summarize the development of technologies underlying the features and methods recited in the Challenged Claims.

A. Digital Video

29. Digitization of analog signals was introduced in the late 1940s with the name "pulse code modulation" (PCM), and was almost immediately applied to video and audio signals. Digital video, like analog video (and film) comprises a rapid sequence of frames. AT&T demonstrated its Picturephone using digital video coding in 1964 at the World's Fair. Digital video was introduced in the professional

television studio environment with the CCIR 601 standard that was developed in the early 1980s and published in 1982 (now known as the ITU-R BT.601 standard). Digital video entered the consumer market with satellite broadcasting (Primestar and DirecTV) in 1994. Digital audio was introduced in the consumer market in 1984 with the Compact Disc.

30. Digital video in its raw format is highly redundant. Each video frame comprises a regular, rectangular array of pixels. The density of the pixel array is chosen such as to portray the highest spatial resolution enabled by a particular video system. The frame rate is chosen to portray the fastest motion smoothly. But, in any video frame the region of the frame that contains highest spatial resolution – fine spatial detail – is probably very small. In any video sequence, the number of frames that portray the fastest motion is probable very small, and even then, the spatial region of the frame that contains fast motion is probably small. In other words, the use of a uniform maximum pixel density and maximum frame rate is considerably excessive for a very high proportion of the video data. A similar situation exists for digital audio data.

31. Transmission or storage of raw digital video data requires huge volumes of data and very fast data rates. Transmitting standard definition color TV with a format of 720x486 pixels and 30 frames/s would require over 250Mbits/s.

HDTV would require approximately 5 times as much data and so-called 4K TV (UHDTV) at 60 frames/s would require approximately 40 times as much data.

32. Video coding is the art of removing the spatial and temporal redundancy to enable storage or transmission of digital video data with vastly fewer bits, while preserving the quality of the raw video data to the maximum extent possible. To some degree, this includes removing data the human vision system cannot perceive. In summary, the redundancy is partly statistical and partly perceptual. A similar situation exists for coding audio data.

B. Video and Audio Coding

33. Video coding does not comprise a single algorithm to remove the redundant information; rather it comprises a set of video coding tools, each directed toward a specific aspect of the redundancy with a common goal of coding the perceptual *information* in the video sequence. A similar situation exists for coding audio data. It is therefore intuitively obvious that the instantaneous coded data rate depends on the content. A vast difference exists between the coded data rate within a single video frame that portrays a stationary sky for the upper portion of the frame, and human activity at the foot of the frame, and similarly there is a vast difference between the coded data rate of a news program portraying a newscaster sitting at a desk, and that of a basketball game. Therefore, the coded video data rate may vary drastically over time – even by orders of magnitude. In response, video coding is a

highly adaptive process that takes into account the local data characteristics, and both adapts coding parameters of the various video coding tools and the modes of using and combining the tools. (This was the core subject matter of my doctoral thesis work.) A similar situation exists for coding audio data.

34. Therefore, from inception – including the work of Bell Labs in the 1960s – video coding systems have employed rate control including rate buffers to smooth out the short timeframe excursions of coded data rate. The state of the buffer – which can be expressed as the fullness of the buffer in bits/bytes or the duration of the buffer playout time in seconds – is used to gauge the performance of the system. During "normal" operation, the buffer state may vary between lower and upper limits representing say 80% of the buffer state range.

35. In the field of standardization, the forerunner of the ITU developed the H.261 standard for videoconferencing between 1984 and 1989, and NEC was one of the leaders in this work, including contributing to development of the H.261 rate buffering specifications[5]. This standard and all succeeding standards include a rate buffer model in which the buffer state is used in a feedback loop to moderate the production of coded bits during the encoding process. It should be noted that control

[5] EX1035 (Proposal and Consideration of Buffer Size, NTT, KDD, NEC, Fujitsu, CCITT SG IV Working Party XV/l Specialist Group on coding for Visual Telephony, Document #287, January 1988)

via buffer fullness is the same as via time for buffer to empty under correct assumptions. A principal mechanism for implementing this feedback process is to vary the degree to which the data is quantized. For example, more coarsely quantizing the data when the rate buffer threatens to overflow leads to production of fewer coded bits, i.e., reduces the encoded data rate. Other mechanisms that have been employed since the inception of digital video coding include changing the adaptive modes of the encoding process, and these mechanisms serve to provide optimum audiovisual quality and smooth transmission. If the buffer state comes within say 10% of either being full or empty, typically, the feedback system applies stronger control, and under extreme conditions of buffer overflow and underflow, drops frames and repeats frames. Indeed, since nothing is perfect, and decoders will not in practice precisely track encoders, it has been common practice for decodes in devices such as settop boxes for broadcast television to drop frames and repeat frames for almost 30 years. This is imperceptible to viewers.

C. Video and Audio Transmission

36. Legacy networks were circuit-switched, meaning that an end-to-end connection was established with guaranteed bandwidth for the duration of the connection. Over the years, the communication technology advanced from the physical connection of two copper wires to digital connections of multiple logical connections over physical cable connections, including TDM (Time Division

Multiplexing), ISDN (Integrated Services Digital Network) and ATM (Asynchronous Transfer Mode). Video and audio signals were transmitted over such networks, notable for videoconferencing in the 1980s and 1990s. Television networks also used dedicated bandwidth connections, including the legacy over-the-air VHF and UHF television channels and coax cable TV networks. In all such communication networks, rate buffering was used for digital data to manage variations in instantaneous encoded data rate, but the transmission data rate was constant. This meant the quality of service – QoS – was constant/guaranteed.

37. Rate buffer control of audiovisual data is described in numerous technical articles and patents beginning with the Bell System Technical Journal in the 1960s, continuing with commercial videoconferencing systems in the 1980s, and consumer video systems in the 1990s. Many innovations were conceived for adaptively coding audiovisual data with optimum use of network bandwidth while preserving perceived audiovisual quality.

38. In the 1990s, the transmission environment began a profound transition with the emergence of the World Wide Web, and the proliferation of the Internet into public life. The architecture of the Internet is profoundly different from circuit switched networks, with no allocation of bandwidth, no constant transmission speed or rate and no constant QoS. Therefore, for video and audio transmission there are two independent variable processes occurring concurrently – variable bitrate

audiovisual data rate encoding and variable bitrate audiovisual data rate transmission.

39. Notably, the connections to and within the Internet vary drastically in bandwidth, unlike the legacy environment in which for example all telephone lines had exactly the same, standardized bandwidth, and television channels had exactly the same bandwidth. So beginning in the second half of the 1990s, companies such as Microsoft, Apple and RealNetworks deployed server and delivery systems that use multirate audio and video coding, in which each piece of content is encoded at multiple, different bitrates. During setup of an audio or video streaming session, a bitrate is negotiated between the server and client, then the content with the closest matching bitrate from the available versions of the content is streamed. During the streaming sessions, ongoing monitoring of network bandwidth conditions is performed, and if necessary, bitrate switching is performed to select a different version of the same content. Seamless play is provided, through the quality will change at the switchover point.

40. It should be noted that bitrate switching is an old technique. Generations of fax machines have used it for decades.

D. Streaming over the Internet

41. Streaming content from a server to a receiver, and buffering the content at the receiver in order to maintain playback quality, was well known before the ’101

patent. EX1004, ¶¶0004-0005. Buffering content at the receiver before decoding and playback was commonly used to adapt to changing network conditions to provide a good streaming media system that will exhibit the following behavior: content played on demand will: start with low delay; once started, play continuously (without stalling) unless interrupted by the user; and play with the highest possible quality given the average communication bandwidth available. *Id.* Transmitting content data coded with one of a plurality of different code rates, and changing the code rate of the content data to be transmitted to a determined code rate, was also well known before the '101 patent. EX1004, ¶0031. It was well known that controlling the coding bit rate of streaming media provides, for example, fast startup, continuous playback, and maximal quality and smoothness over the entire streaming session. EX1004, ¶0002.

42. The growth of the internet in the 1990s led to an increase in streaming media. *See* EX1015. Streaming arose as an alternative to the "download-first-and-then play" technique, which requires a client device to download a file in its entirety and then begin playing the file only after the entire file has been downloaded onto the client device. (E.g., EX1038, 1:38-49.) Conversely, for streaming, "audiovisual data is packetized, delivered over a network, and played as the packets are being received at the receiving end, as opposed to being played only after all the packets have been downloaded." EX1017, 2:9-13. Thus, streaming allows users to start

playing the content before the entire file has been transmitted. EX1017, 2:13-18. By the late 1990s, media streaming "account[ed] for a significant, and expanding, portion of the Internet traffic." EX1018, 250.

43. Streaming of media-related data follows a packet segmentation process, where the data is divided into smaller segments (called packets) for transmission over the network to the client device. The client device can then download and play the segments. In the Internet Protocol, each packet contains an address and a fixed amount of data. For example, the server on which the media is stored "breaks the media into packets that are routed and delivered over the network." EX1019, 246. "A series of time-stamped packets is called a stream." EX1019, 246.

44. To overcome bandwidth constraints in streaming environments, audio and video data is compressed before transmission. The recipient would then decompress the data into the original audio/video data. By 2000, several international standards had been defined to reduce the bandwidth of video signals via compression coding. The standards include MPEG-2 (also called H.262) (described in EX1020, EX1021), MPEG-4 (described in EX1022), and H.261 (EX1023).

E. Video Coding Standards

45. As explained above, by 2000, various standards existed that were specifically designed to encode and decode video for transmission between a server and a client.

46. For example, the MPEG-2 standard requires a compliant bitstream that a decoder must be able to decode. Thus, encoding techniques for creating compliant bitstreams are left to the encoder implementors and the focus of the standard is to "facilitate the bitstream interchange among different applications." EX1021, 6. In other words, rather than "specify the architecture or implementation of encoders or decoders," the standard defines a transport stream, and thus a "considerable degree of freedom exists in the design and implementation of encoders [and] decoders." EX1024, vii. The following diagram depicts the general process of an MPEG-2 stream, where a video stream is encoded and transmitted by a server over a network to a receiver with a decoder that decodes the stream for playing on the receiver. EX1025, 1:

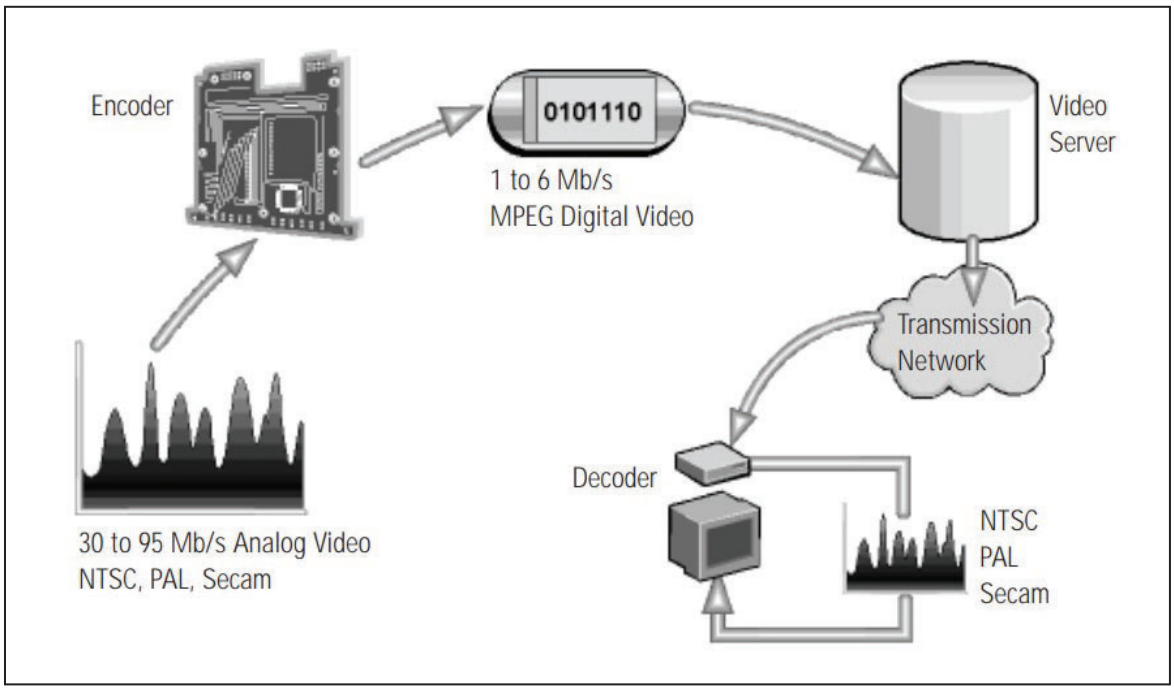

47. In an effort to increase the quality of video streaming, the MPEG-4 standard endeavored to increase coding efficiencies and increase the ability to handle errors such as loss of packets. EX1022, 367.

F. The Use of Buffers in Video Coding Standards

48. One of the major hurdles in achieving a video streaming system that can play content with low delay once requested and continuously from when it starts (e.g., without stalling) at a high quality is changes in network conditions. EX1026, 1. To achieve these goals, buffering of content at the receiver before decoding and playback is required. EX1026, 1; EX1027, ¶0003 ("In order to account for these variances in data delivery to the client computer, the client computer maintains a buffer of data, typically on the order of three to five seconds worth of data. This

buffer allows the client computer to smooth out the variances so that they are not noticeable to the user during playback of the content."). During buffering, the receiver collects a number of the streaming packets in memory before playing them out. Then, as the file gets played, the buffer continues to collect packets in reserve so that if there is a delay in receiving packets, playback will be continuous. EX1015, 5. For example, MPEG-2 utilizes a Video Buffer Verified on the server side that simulates the status of the buffer on the receiver side to ensure that the receiver-side buffer never overflows and only underflows in restricted circumstances. EX1020, 160. That is, MPEG-2 presumes the existence of a buffer at the decoder.

49. Typically, a receiver does not begin playing a video stream until the buffer at the decoder has been filled to a threshold level. EX1028, 1:42-51. Once the receiver begins playing the video stream, the data stored in the buffer begins to get used up. EX1028, 1:42-51. At the same time, the incoming packets of the video stream refill the buffer. EX1028, 1:42-51. Thus, in a hypothetical, error-free, situation where the rate at which the receiver is playing the video stream (i.e., playback rate) is equivalent to the rate at which the video stream is transmitted to the receiver (i.e., transmission rate), the buffer level will remain constant.

50. However, the available bandwidth and degradations in transmission mediums used in video streaming over the internet can cause variations in the rate at which video streams are transmitted. EX1029, 1. This is because the available

bandwidth on a given network correlates to the highest transmission rate available for a given video stream. EX1027, ¶0036 ("This amount of available bandwidth operates as an upper threshold or limit."), ¶0037 ("For example, the network connection at client device 102 may be 256 kbps or 10 mbps, so the accelerated streaming rate would not be able to exceed 256 kbps or 10 mbps, respectively. Similarly, network congestion or other restrictions between server device 146 and client device 102 may prevent data from being streamed at greater than some rate . . . ."). Thus, if the available bandwidth suddenly decreases, the transmission rate may have to decrease as well. This can cause the buffer to deplete (e.g., network congestion causes the transmission rate to be slower than the rate at which the video is being played back by the receiver), which is also referred to as buffer underflow. EX1028, 1:52-2:6. Thus, in an effort to maintain the highest possible video quality while also preventing interruptions to the video being played back by the receiver, the rate at which video streams are transmitted is set to vary based on changing network conditions. EX1029, 1.

51. Various methods of setting the transmission rate of a video stream have been disclosed. As the following examples show, before the '101 Patent, it was well known to set the transmission rate based, at least in part, on characteristics of the buffer at the receiver. For example, U.S. Patent No. 5,822,524 to Chen (EX1030), filed in 1995, along with its published file history, discloses a server-client

architecture in which multimedia files are delivered from a server buffer to a client-side buffer in the form of digital data packets. Chen describes a simple transmission concept using a "Water Mark" model. EX1030, 6:16-54. A bucket may be considered to have high and low "water marks." *Id.* Water exits the bucket through a spout similar to data exiting a packet buffer as its content is delivered to a user. *See id.* When the amount of data (water in the bucket) falls between the water marks, transmission occurs in the Normal mode. *Id.* The Normal mode executes frame level pacing (*id.* at 10:3-4)—i.e., transmission at the playback rate. When the amount of data falls below the low mark, transmission changes to the Rush mode. *Id.* at 6:42-47. In the Rush mode, the frame level pacing is ignored and data is transmitted as fast as possible to maintain enough data in the buffer for playback. *Id.* at Claims 18, 29, Fig. 6. Chen also describes assigning packet sequence numbers (serial identifiers) to the data packets making up the streaming media. *Id.* at 6:55-7:2. The media player described in Chen uses a register to maintain a variable last packet sequence number, which is the "packet sequence number of the last received packet." *Id.* at 7:24-32. The user system can thus request lost packets using the last packet sequence number in the register. *Id.* at 10:40-50.

52. As another example, U.S. Patent No. 7,711,841, issued May 4, 2010, with a priority date of February 28, 2006 and a prior publication date of August 30, 2007, describes a server-client system where the client device utilizes a streaming

buffer to temporarily store media data streamed from a server. EX1028, 1:24-51. The level of the streaming buffer is monitored during playback of the media data and if that level dips below a lower limit, the playback rate of the media data is slowed down. *Id.* at 2:55-3:2. The amount of media data stored on the streaming buffer is expressed in time units (i.e., time of playback left in the streaming buffer). *Id.* at 7:54-65.

53. As another example, International Publication No. WO 2006/108435, published October 19, 2006, describes a server-client multimedia streaming system. EX1031, 1:13-18. The transmission bit rate is determined based on the available bandwidth and the status of the client buffer. *Id.* at 1:32-35. The relevant buffer characteristics can include (i) buffer fill level, which represents the amount of data in the buffer in bytes, and (ii) playout length, which represents the time in seconds for the data within the buffer to be played to the user. *Id.* at 2:1-9. The buffer fill level can be determined based on buffer information reported to the server, including the next sequence number (NSN) or oldest buffered sequence number (OBSN) within the client buffer and the highest received sequence number (HRSN) within the client buffer. *Id.* at 2:12-16. If the fill level falls below a threshold, a different transmission rate is selected. *Id.* 2:16-18. Similarly, if the playout length drops below a threshold, a lower transmission rate is selected to prevent buffer underflow.

Id. at 2:18-31. Conversely, if the playout length exceeds a threshold, a higher transmission rate is selected to prevent buffer overflow. *Id.* at 3:10-32.

54. As another example, the "Background Art" Section of the '101 patent describes as admitted prior art a client-server-based video distribution system in which the clients (reception devices) "stores received data among the content data into a storage device (a buffer) while receiving the content data." EX1001, 1:11-31. Similarly, the Background Section of PO's related '809 Patent admits that Japanese Laid-Open Patent Publication No. 2004-172830—original and Certified English translations of which are included with this Petition as Exhibits 1011 and 1012—describes a "known" client/server delivery system in which "[t]he server device is configured to be able to transmit, to the client device, content data in which a piece of content is encoded at an arbitrary one of a plurality of different bit rates," and "[w]hile receiving the content data transmitted by the server device, the client device stores the received data of the content data in a storage device and reproduces the content based on the stored data. EX1010, 1:13-37. Thus, PO's own '809 Patent describes what was known to the POSITA at the time of the alleged invention.

55. As an additional example, "Scalable Rate Control For MPEG-4 Video," authored by Hung-Ju Lee, Tihao Chiang, and Ya-Qin Zhang, and published in September 2000 (EX1032), describes a system that prevents buffer underflow or

overflow by skipping frames at the encoder. For example, to prevent overflow, frames are skipped. *Id.* at 885-87.

G. Synchronized Streaming to Multiple Recipients

56. The '101 patent admits in a section titled "Background Art" that "[t]here is a known distribution system that includes a transmission device and a plurality of reception devices configured to be capable of communicating with each other and allows the plurality of reception devices to synchronously reproduce content." EX1001, 1:11-15. The '101 patent provides to admitted prior art examples of such a distribution system.

57. First, the '101 patent admits that Japanese Unexamined patent Application Publication No. 2005-191786—which the '101 patent refers to as "Patent Document 1," original and Certified English translations of which are included with this Petition as Exhibits EX1008 and EX1013—teaches a system that matches a clock within each reception device to a reference clock. EX1001, 1:16-18. The transmission device then transits a reproduction start time (i.e., a time at which the reception device starts reproduction of content) to each reception device as well as content data, which the reception device stores in a buffer. EX1001, 1:18-26. Because the clocks of each device are matched, when the devices begin playback of content at the reproduction start time, the devices are playing back content synchronously. EX1001, 1:26-31.

58. Second, the '101 patent admits that Japanese Unexamined patent Application Publication No. 2007-13705—which the '101 patent refers to as "Patent Document 2," original and Certified English translations of which are included with this Petition as Exhibits EX1009 and EX1014—teaches a system that permits a plurality of devices to synchronously reproduce content even if the time to start reproduction of content varies among the reception devices (i.e., if one reception device joins the synchronized stream after a plurality of other reception devices already began playback of the synchronized stream). EX1001, 1:32-36. In this system, the second reception device estimates an amount of time needed for it to start reproduction of content and determines its reproduction start time based on that estimation, which the second reception device then transmits to the transmission device. EX1001, 1:36-41. Thereafter, the transmission device transmits content to the second transmission device to be reproduced at the second reception device's reproduction start time such that it matches content being played back at a first reception device at that same time. EX1001, 1:42-46. Thus, the content being played back at the first and second reception devices is synchronized. EX1001, 1:46-49.

IV. Relevant Legal Standards

59. I have been asked to provide my opinions as to whether claims 1, 2, 4, 5, 7, 11, 12, 14-18, 20-23, 25-29 of the '101 patent are anticipated or would have

been obvious to a person of ordinary skill in the art at the time of the effective filing date of the ’101 patent.

60. I am an engineer by training and profession. The opinions I express in this declaration involve the application of my technical knowledge and experience to the evaluation of certain prior art with respect to the ’101 patent. In addition, I understand that the following legal principles apply.

61. It is my understanding that, in determining whether claims of the ’101 patent are anticipated or obvious in this proceeding, the claim terms are generally given their ordinary and customary meaning as understood by a person of ordinary skill in the relevant art. A person of ordinary skill in the art would read the claim terms in the context of the entire patent specification in which they appear, as well as the prosecution history of the patent.

62. It is my understanding that a claim is anticipated under 35 U.S.C. § 102 if each and every element and limitation of the claim is found, either expressly or inherently, in a single prior art reference. I also understand that a reference must disclose all claimed elements as arranged in the claim, although identical terminology need not be used in the reference and claim elements.

63. It is my understanding that a claim is unpatentable under 35 U.S.C. § 103 if the claimed subject matter as a whole would have been obvious to a person of ordinary skill in the art at the time of the alleged invention. I also understand that

an obviousness analysis takes into account the scope and content of the prior art, the differences between the claimed subject matter and the prior art, and the level of ordinary skill in the art at the time of the invention.

64. In determining the scope and content of the prior art, it is my understanding that a reference is considered relevant prior art if it falls within the field of the inventor's endeavor. In addition, a reference is prior art if it is reasonably pertinent to the particular problem with which the inventor was involved. A reference is reasonably pertinent if it logically would have commended itself to an inventor's attention in considering his problem. If a reference relates to the same problem as the claimed invention, that supports use of the reference as prior art in an obviousness analysis.

65. To assess the differences between prior art and the claimed subject matter, it is my understanding that 35 U.S.C. § 103 requires the claimed invention to be considered as a whole. This "as a whole" assessment involves showing that one of ordinary skill in the art at the time of invention, confronted by the same problems as the inventor and with no knowledge of the claimed invention, would have selected the elements from the prior art and combined them in the claimed manner.

66. It is my further understanding that several rationales may be applied for combining references or modifying a reference to show obviousness of claimed

subject matter. These rationales include: combining prior art elements according to known methods to yield predictable results; simple substitution of one known element for another to obtain predictable results; a predictable use of prior art elements according to their established functions; applying a known technique to a known device (method or product) ready for improvement to yield predictable results; choosing from a finite number of identified, predictable solutions, with a reasonable expectation of success; and some teaching, suggestion, or motivation in the prior art that would have led one of ordinary skill to modify a prior art reference or to combine prior art teachings to arrive at the claimed invention.

V. Person of Ordinary Skill in the Art

67. It is my understanding that when interpreting the claims of the ’101 patent I must do so based on the perspective of one of ordinary skill in the art at the relevant priority date. My understanding is that the earliest claimed priority date of the ’101 patent is November 5, 2009.

68. It is my opinion that one of ordinary skill in the art in the field of audiovisual data rate control, and more generally in the late 2000s time period, would have had a bachelor’s degree in electrical engineering or computer science, or an equivalent degree, and two to three years of experience in the field of video audiovisual data transmission.

69. I am a person of at least ordinary skill in the art and was so at the time of the purported invention of the ’101 patent.

VI. Overview of the Subject U.S. Patent No. 8,752,101

70. The ’101 patent is titled “Distribution System”. It was filed Nov. 5, 2009 in Japan and subsequently filed as a PCT application on October 13, 2010. EX1001, 1:5-7.

A. Field of Art

71. The stated field of art is “a distribution system that transmits content data representing content from a transmission device to a reception device.” EX1001, 1:5-7.

B. Background Art – Description of the Prior Art and Admitted Prior Art

72. The ’101 patent asserts the following problem: “While the reception device is receiving content data, the amount of data that the reception device receives from the transmission device per unit time (i.e., a communication speed) varies depending on the status of use of a communication line, and so on. Therefore, when the communication speed becomes extremely low, there is a case that the data amount of content data stored in the storage device of the reception device does not reach a sufficient amount by the reproduction start time. In such a case, there is a

fear that the reception device cannot start reproduction of content at the reproduction start time." EX1001, 1:54-64.

73. The '101 patent identifies two documents it admits are prior art: Patent Document 1 and 2. EX1001, 1:11-53. The '101 patent explains that a distribution system described in Patent Document 1 matches time of a clock disposed to each of the plurality of reception devices with time of a reference clock. EX1001, 1:11-31. Moreover, the transmission device transmits reproduction start time, which is time that the reception device starts reproduction of content, to each reception terminal. EX1001, 1:11-31. Similarly, the '101 patent explains that Patent Document 2 allows a plurality of devices to reproduce content synchronously by synching the reproduction start times amongst the plurality of devices. EX1001, 1:32-49.

C. Summary – the Alleged Invention of the '101 Patent

74. In brief, the alleged invention of the '101 patent is summarized as:

- "a transmission device and a reception device configured to be capable of communicating with each other." EX1001, 2:28-29.
- "a content transmitting means for transmitting content data, which is one content coded with any one code rate of **a plurality of code rates** different from each other, to the reception device." EX1001, 2:30-33
- "… determining the code rate based on **a remaining time before reproduction start time** set as time at which the reception device starts

reproduction of the content from a present moment, and based on **an available reproduction time**, which is a time available for reproducing the content based on **the content data stored in the storage device** of the reception device. The content transmitting means is configured to change the code rate of the content data to be transmitted to the reception device to the determined code rate." EX1001, 2:39-49

75. The '101 patent relates to a "distribution system" that "transmits content data representing content from a transmission device to a reception device." EX1001, 1:5-7. The distribution system 1 of FIG. 1 includes a transmission device (server device 10) and a reception device (terminal devices 20a, 20b, 20c) capable of communicating with each other via the Internet (NW). EX1001, 5:13-20. Transmission device 10 is equipped with a content transmitting means 45 for transmitting content data. EX1001, 2:30-31, 8:46-48. The content data is "one content coded with any one code rate of a plurality of code rates different from each other." EX1001, 2:31-33, 8:48-52. Reception device 20a is equipped with a content reproducing means 33 for, while receiving the content data transmitted by the transmission device 10, storing received data of the content data into a storage device (buffer part 33b) and also reproducing the content based on the stored data. EX1001, 2:34-38, 9:51-55, FIG. 2 (reproduced below).

Fig.2

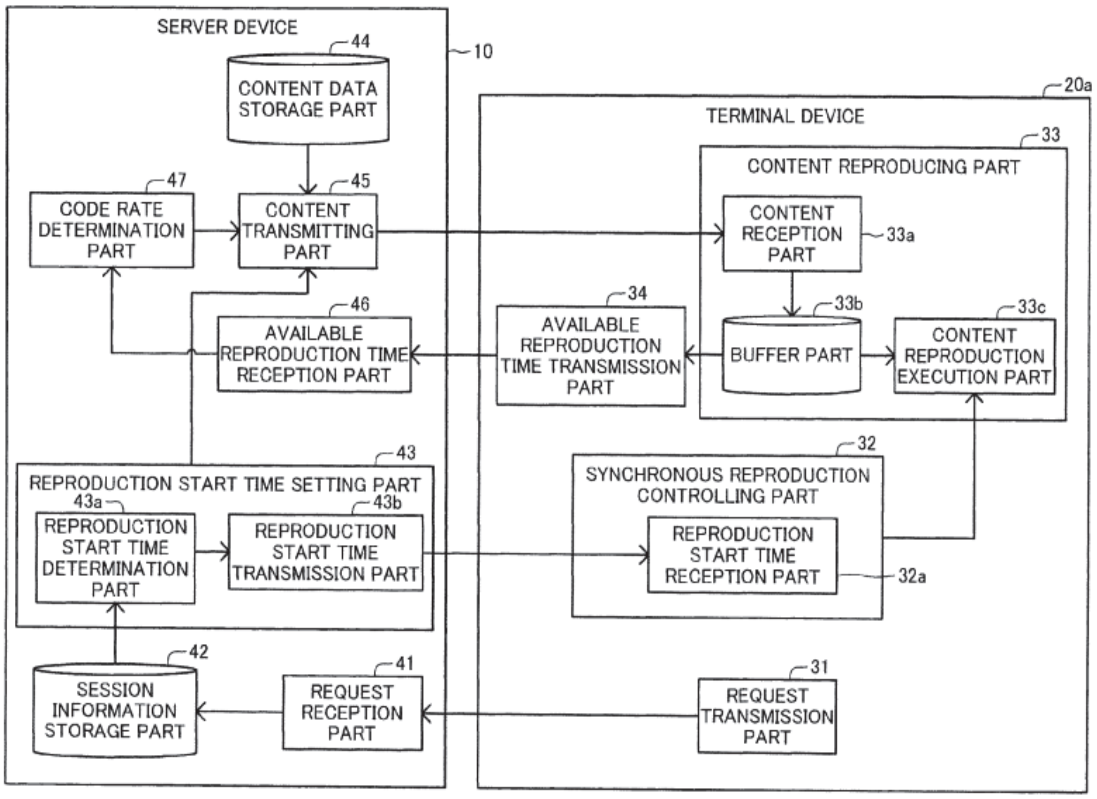

76. Distribution system 1 comprises a code rate determining part 47 for determining the code rate based on (1) "a remaining time before reproduction start time" set as a time at which reception device 20 starts reproduction of the content from a present moment, and based on (2) "an available reproduction time," which is a time available for reproducing the content based on the content data stored in storage device 33b of reception device 20a. EX1001, 2:43-46, 10:13-18.

77. Content transmitting means 45 "change[s] the code rate" of the content data to be transmitted to reception device 20a to the determined code rate. EX1001, 2:47-49, 10:60-11:3, 15:54-57. Content reproducing means 33 "start[s]

[reproducing] the content at the set reproduction start time." EX1001, 2:50-51, 8:37-45, 16:4-7.

D. Prosecution History of the '101 Patent

78. I have reviewed the file history of U.S. Patent Application No. 13/508,025 ("the '025 application"), from which the '101 patent issued.

79. The '101 patent's claims were allowed without any prior art rejections. EX1002. No amendments were made to the PCT application during the International Stage. A Preliminary Amendment was filed upon entry into the U.S. National Stage that (1) changed various claim terms from "means" to "unit"; (2) removed multiple dependencies from various dependent claims; (3) added other amendments that were not in response to prior art rejections; (4) added "computer-readable medium" to the program claims; and (5) added new claims 26-28. EX1002, 212-222.

80. Independent claims 21 and 26 were rejected by the Examiner under 35 U.S.C. § 101 for claiming a signal per se. EX1002, 34-38. Claims 21 and 26 were subsequently amended to add "non-transitory." EX1002, 22-32. Thereafter, the application was allowed. EX1002, 8-15.

E. The Examiner Erred By Allowing the Challenged Claims

81. The '101 patent's claims were not inventive in light of the prior art available at the time of filing that was not in front of the examiner. For example,

U.S. Patent Application Publication No. US 2006/0143678 A1 to Chou et al. (hereinafter "Chou"); U.S. Publication No. US 2004/0153951 A1 to Walker et al. (hereinafter "Walker"); and the admitted prior art render the Challenged Claims obvious as set forth herein.

82. The Examiner erred in allowing the '101 patent. Neither Chou nor Wang were before the U.S. Examiner. If the Examiner had the benefit of these references, their explanation herein, and the remaining background and technical discussions herein, the Challenged Claims would not have issued.

VII. Summary of the Prior Art

A. US20060143678A1 ("Chou")

83. US20060143678A1 is a U.S. patent application titled "System and Process for Controlling the Coded Bit Rate of Streaming Media Data Employing a Linear Quadratic Technique and Leaky Bucket Model". *See* EX1004. The principal named inventor is P A Chou. *Id.*, Cover. *Chou* was filed Dec. 10, 2004. *Id.*

84. *Chou* discloses:

- An encoder, network and decoder – Fig. 2, i.e., "a transmission device and a reception device configured to be capable of communicating with each other."
- "[A] system and process for controlling a coding bit rate of streaming media data being transmitted to a client from a server over a computer

network. In general, this coding bit rate control involves dynamically adjusting the coding bit rate of the streaming media data to control the client buffer duration. The purpose of this is to prevent the client buffer from underflowing, while keeping the average coding bit rate close to the average transmission bit rate of the network (and thus maximizing the quality of the playback of the data)." Chou, ¶0019. I.e., "one content coded with any one code rate of a plurality of code rates different from each other."

- "In general, this coding bit rate control involves dynamically adjusting the coding bit rate of the streaming media data to control the client buffer duration. The purpose of this is to prevent the client buffer from underflowing, while keeping the average coding bit rate close to the average transmission bit rate of the network (an thus maximizing the quality of the playback of the data). The problem of coding bit rate control is formulated as a standard problem in linear quadratic optimal control, in which the client buffer duration is controlled as closely as possible to a target level." Chou, ¶0019. I.e., "controlling the available reproduction time based on the content stored in the storage device of the receiver."

85. I understand that *Chou* (filed December 10, 2004; published June 29, 2006) is prior art under pre-AIA 35 U.S.C. §102(a) and 102(b).

86. *Chou* generally relates to a system and process for controlling the coding bit rate of streaming media data. EX1004, Abstract. *Chou* "is directed toward a system and process for controlling a coding bit rate of streaming media data being transmitted to a client from a server over a computer network." EX1004, ¶19. *Chou* states: "In general, this coding bit rate control involves dynamically adjusting the coding bit rate of the streaming media data to control the client buffer duration." EX1004, ¶0019.

87. *Chou*, like the '101 patent, teaches a distribution system (FIGs. 11A-C and accompanying description) that transmits content data representing content from a transmission device (server) to a reception device (client). FIGs. 11A-11C of *Chou* show a server streaming media data to a client over a network. EX1004, ¶19.

88. Specifically, *Chou* teaches transmitting content data, which is one content coded with any one code rate of a plurality of code rates different from each other, to a reception device (client). *Chou's* "server generates data streams that exhibit one of a number of coding bit rates supported by the server, and transmits data streams at the most appropriate supported coding bit rate closest to the rate requested by the client." EX1004, ¶31.

89. *Chou* teaches storing, by the reception device (client), received data of the content data into a storage device (client's decoder buffer) and also reproducing the content based on the stored data. EX1004, ¶28.

90. *Chou* teaches determining the code rate based on a remaining time before reproduction start time ("playback deadline") set as the time at which the reception device (client) starts reproduction of the content from a present moment ("media time"), and based on an available reproduction time ("buffer duration"), which is a time available for reproducing the content based on the content data stored in the storage device (client's decoder buffer) of the reception device. EX1004, FIG. 5.

91. More specifically, *Chou* teaches an "available reproduction time" in that the client of *Chou* has a client buffer and "[t]he size of the client buffer can be expressed as the number of seconds of content in the buffer, called the buffer duration." EX1004, ¶7. As shown in FIG. 5, frames arrive at the client between the upper and lower bounds, in an "arrival schedule." EX1004, ¶67, FIG. 5. *Chou* states that "the gap between a frame's arrival time and its playback deadline is the client buffer duration at the time of the frame arrival." EX1004, ¶67, FIG. 5. Accordingly, in FIG. 5, the gap between the "arrival schedule" and the "playback deadline" is the "buffer duration," equivalent to the "available reproduction time." EX1004, ¶67, FIG. 5.

92. Thus *Chou* also teaches the "reproduction start time," which is shown by the "playback deadline" of FIG. 5. EX1004, ¶67, FIG. 5. *Chou* states that the "playback deadline" is the time at which frame n is scheduled to be played. EX1004, ¶67, FIG. 5.

93. *Chou* states that it can achieve uninterrupted playback by regulating the coding bit rate so that the client buffer does not underflow. EX1004, ¶70.

94. The "target schedule" (set at a shorter client time than the playback deadline) is a built in "margin of safety." EX1004, ¶70. *Chou* states that "[b]y regulating the coding bit rate, it is attempted to control the buffer tube upper bound so that it tracks the target schedule." EX1004, ¶70. *Chou* further states that "[i]f the buffer tube upper bound is close to the target schedule, then the arrival times of all frames will certainly be earlier than their playback deadlines and thus uninterrupted playback will be ensured." EX1004, ¶70. Thus *Chou* regulates the coding bit rate to control the buffer tube upper bound so that it tracks the target schedule, the target schedule being relative to the playback deadline. EX1004, 70. Accordingly, *Chou* teaches regulating the code rate (controlling the upper bound of the arrival schedule) based on a remaining time before the playback deadline from a present moment and based on client buffer duration.

95. *Chou* teaches changing the code rate of the content data to be transmitted to the reception device (client) by the server device to the determined

code rate. Specifically, *Chou* states that "[t]he client employs the encoder buffer parameters and the upper bound gap values to determine on a frame-by-frame basis the coding bit rate that will reduce a difference between the estimated latest anticipated arrival time of a frame under consideration and a prescribed target arrival time of that frame, *in order to keep the client buffer at approximately the desired duration level*." EX1004, ¶25 (emphasis added). *Chou* further teaches that "[i]f the current coding bit rate is below the arrival rate, and the client buffer duration begins to increase above its target level, then the coding bit rate can be switched up to a new coding bit rate above the arrival rate only if the new coding bit rate is below the conservative limit." EX1004, ¶123.

96. *Chou* also teaches to start reproduction of the content at the set reproduction time (client time). EX1004, ¶59.

B. US7606928 ("Wang")

97. I understand that *Wang* (U.S. 7,606,928; filed March 21, 2003; published September 23, 2004; issued October 20, 2009) is prior art under pre-AIA 35 U.S.C. §102(a) and 102(b). *See* EX1016.

98. *Wang* relates generally to multimedia streaming, and more particularly to receiver buffer fullness management of the multimedia streaming client. EX1016, 1:7-9. FIG. 3 of *Wang* is as follows:

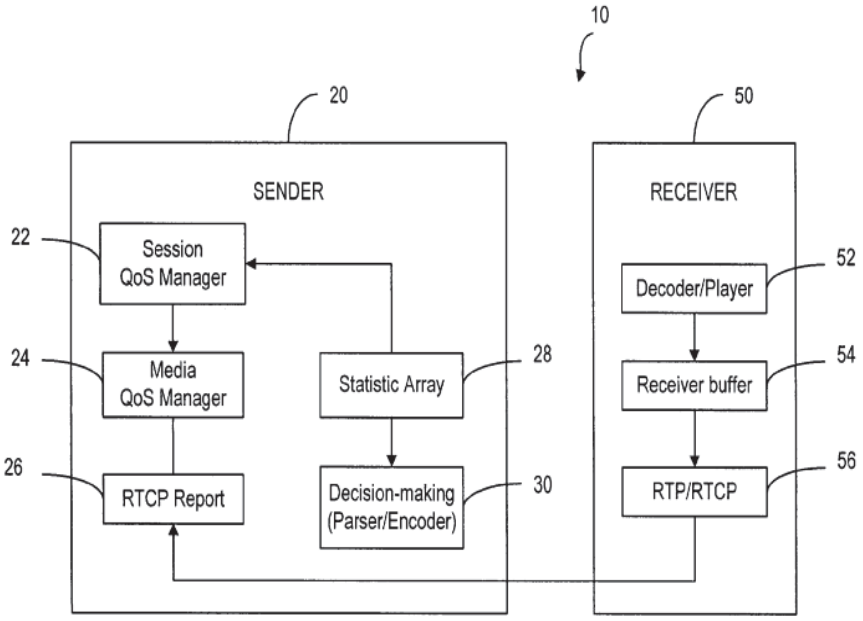

Fig. 3

99. *Wang*, like the '101 patent, teaches a distribution system (multimedia streaming system 10) that transmits content data representing content from a transmission device (sender 20) to a reception device (receiver 50). EX1016, 6:60-62, FIG. 3. Specifically, *Wang* teaches transmitting content data, which is one content coded with any one code rate of a plurality of code rates different from each other, to a reception device 50. In *Wang*, the sender 20 adjusts the transmission rate and/or nominal playout rate of the different media to maintain the receiver buffer fullness level and/or perform "clock drift correction". EX1016, 6:58 to 7:18. *Wang* describes "transmission rate and/or nominal playout rate" as the rate "at which streaming data is provided to the client." EX1016, 3:30-32. (*Wang* refers to "clock drift" as "playout rate deviations." EX1016, 3:3-4.) Different media QoS (Quality

of Session) managers 24 of the sender 20 can provide different rate adaptations for the different media types. EX1016, 7:18-20.

100. *Wang* teaches storing, by the reception device 50, received data of the content data into a storage device (receiver buffer 54) and also reproducing the content based on the stored data. Specifically, *Wang* teaches that decoder/player 52 of receiver 50 will process the packets from the receiver buffer 54 and render them to the playback device (decoder/player 52). EX1016, 6:60-65; FIG. 3.

101. *Wang* teaches determining the code rate based on (a) a remaining time before reproduction start time set as a time at which the reception device starts reproduction of the content from a present moment, and based on (b) an available reproduction time, and changing the code rate of the content to be transmitted to the determined code rate, which is a time available for reproducing the content based on the content data stored in the storage device 54 of the reception device 50. In *Wang*, the remaining time before reproduction start time can be determined from "current time" and "scheduled playout time." Available reproduction time is taught by "remaining playout duration in time." Such receiver buffer fullness level information can be used at the sender 20 to adjust the transmission rate and/or nominal playout rate of the RTP (Real-time Transfer Protocol) packets in order to maintain a targeted receiver buffer fullness level. EX1016, 2:50-57, 3:25-36, 7:1-22, Abstract.

102. *Wang* teaches changing the code rate of the content data to be transmitted to the reception device 50 by the server device 20 to the determined code rate. In *Wang*, the decision-making block 30 of sender 20 takes processed information from the QoS manager 24 and then decides what type of adjustment in the transmission characteristic is required to fulfill the adaptation. EX1016, 7:10-13. As noted above, the sender 20 uses the information provided from the receiver 50 to adjust the transmission rate and/or nominal playout rate of the different media to maintain the receiver buffer fullness level and/or perform "clock drift correction." EX1016, Abstract, 3:25-36, 6:58-7:22. *Wang* further teaches starting reproduction of the content at the set reproduction start time, i.e., "scheduled playout time." EX1016, Abstract.

C. Admitted Prior Art

103. The '101 patent describes Patent Documents 1 and 2 as "Background Art." I understand that by doing so, the Applicant was admitting that such documents are prior art—i.e. Applicant Admitted Prior Art ("AAPA"). The '101 patent also describes "a *known* distribution system that includes a transmission device and a plurality of reception devices configured to be capable of communicating with each other." Ex 101, 1:11-13 (emphasis added).

i. Patent Document 1

104. I understand that Patent Document 1 (JP2005-191786; published July 14, 2005; original and certified English translations included as Exhibits EX1008, EX1013) is prior art under pre-AIA 35 U.S.C. §102(a) and 102(b). Patent Document 1 "includes a transmission device and a plurality of reception devices" configured to "allow[] the plurality of reception devices to synchronously reproduce content." EX1001, 1:11-16. Further, the transmission device transmits "reproduction start time" which is used to "match the positions to reproduce the content with each other among the plurality of reception devices." EX1001, 1:16-31.

ii. Patent Document 2 (Nobuyoshi)

105. Patent Document 2 ("*Nobuyoshi*") (JP2007-013705; published on January 18, 2007; original and certified English translations included as Exhibits EX1009, EX1014) lists Tomita Nobuyoshi as the inventor and I understand that it is prior art under pre-AIA 35 U.S.C. §102(a) and 102(b). Patent Document 2 discloses "a system that allows a plurality of reception devices to synchronously reproduce content" by determining "reproduction start times" for the various reception devices and "match[ing] positions to reproduce content with each other." EX1001, 1:32-49.

VIII. Claim Construction

106. For purposes of this Declaration, I have considered the claim language, specification, and portions of the prosecution history of the '101 patent, to determine the meaning of the claim language as it would have been understood by a POSITA.

I understand that the "plain and ordinary meaning" or *Philips* standard has traditionally been applied in district court litigation, where a claim term is given its plain and ordinary meaning in view of the specification from the viewpoint of a person of ordinary skill in the art. I have applied the *Philips* standard in my analysis. Unless otherwise stated, I have applied the plain and ordinary meaning to all claim terms.

107. Additionally, it is my understanding that Patent Owner has served Infringement Contentions in the related District Court Case. EX1031. As noted in the sections that follow, my analysis of the limitations of certain Challenged Claims is consistent with Patent Owner's assertion of infringement against Petitioner's product, as shown in the excerpted portions of NEC's Infringement Contentions (EX1031) copied below.

IX. Ground I – The Challenged Claims Are Rendered Obvious By *Chou*.

108. In my opinion, the Challenged Claims of the '101 patent are rendered obvious by *Chou*. In the discussion of the Challenged Claims that follows, I explain the correspondence between the disclosure of *Chou* each limitation of the Challenged Claims.

A. Claim 1

i. [1a] A distribution system, including a transmission device and a reception device configured to be capable of communicating with each other,

109. If a limitation, *Chou* teaches[6] a distribution system, including a transmission device (e.g., server) and a reception device (e.g., client) configured to be capable of communicating with each other (e.g., over a network), rendering it obvious. EX1004, Abstract, ¶¶0002, 0019, 0021, 0031, 0060, 0115, FIGS. 2, 11A-C, claims 1, 47, 48.

110. Specifically, *Chou* is directed toward "a system and process for controlling a coding bit rate of streaming media data being transmitted to a client from a server over a computer network." EX1004, ¶0019. *See also, e.g.*, EX1004, ¶¶0002, 0021, 0031, 0060 ("both the encoder 200 and the decoder 202 run in real time over an isochronous communication channel of a network 204"), 0115 ("[t]he server then streams the media data to the client at a prescribed initial coding bit rate, during a startup period (process action 1104)"), Claim 1 ("[a] computer-implemented process for controlling a coding bit rate of streaming media data being transmitted to a client from a server over a computer network"), Claim 47 ("[a] system for controlling a coding bit rate of streaming media data being transmitted to a client from a server over a computer network"), and Claim 48 ([a] computer-implemented process for controlling a coding bit rate of streaming media data being transmitted to a client from a server over a computer network).

[6] "Teaches" herein represents "teaches or suggests," or otherwise renders obvious.

111. FIGs. 11A-C (a portion of FIG. 11A is reproduced below) further depict and describe two-way communication between a "CLIENT" and a "SERVER."

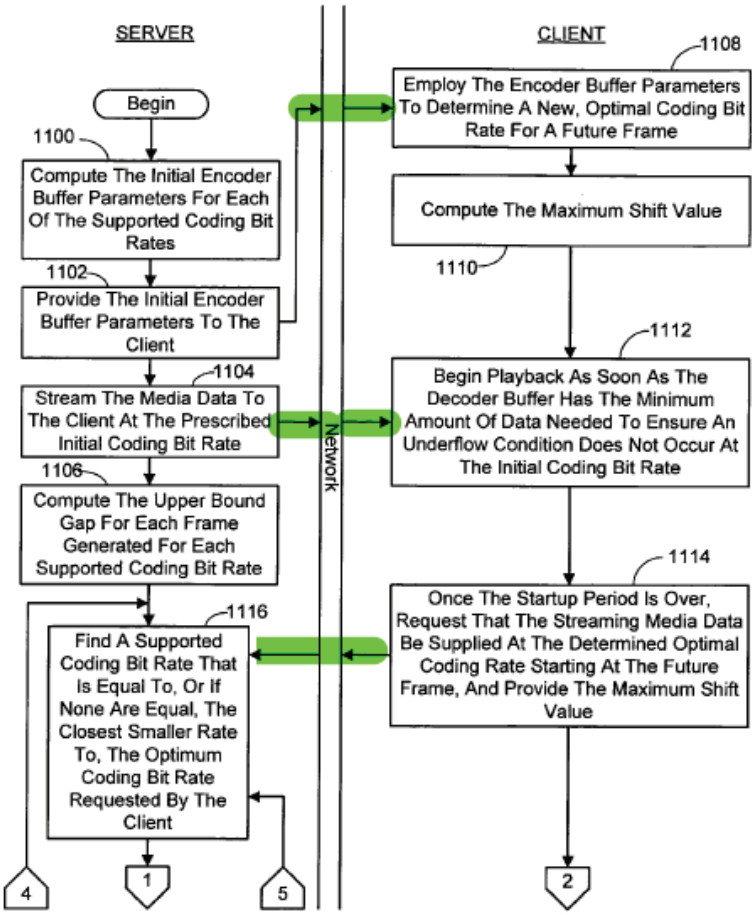

FIG. 11A

EX1004, FIG. 11A; *see also* FIGs. 11B-C and FIG. 2.

112. My above analysis is consistent with the assertion of infringement against Petitioner's product, as shown in the following excerpt, advanced in the related litigation:

[redacted]

[redacted]

EX1031, 3-5.

ii. [1b] the transmission device being equipped with a content transmitting unit for transmitting content data, which is one content coded with any one code rate of a plurality of code rates different from each other, to the reception device, and

113. *Chou* teaches the transmission device (e.g., server) being equipped with a content transmitting unit for transmitting content data (e.g., streaming media data), which is one content coded with any one code rate (e.g., code bit rate) of a plurality of code rates different from each other, to the reception device (e.g., client). EX1004, ¶¶0019, 0021-0022, 0031, 0060, 0069-0070, 0089, 0091, 0109-0110, 0112, 0115, 0118, 0130, FIGS. 11A-C.

(a) The transmission device being equipped with a content transmitting unit for transmitting content data… to the reception device

114. *Chou* teaches "the server transmits the streaming media data" (EX1004, ¶0021), and the streaming media data is "provided to the client" (EX1004, ¶0023).

See also, EX1004, ¶0019, 0060, 0031, FIGS. 2, 11A-C. *Chou* illustrates the server transmitting streaming media data to the client, for example, in FIG. 11A.

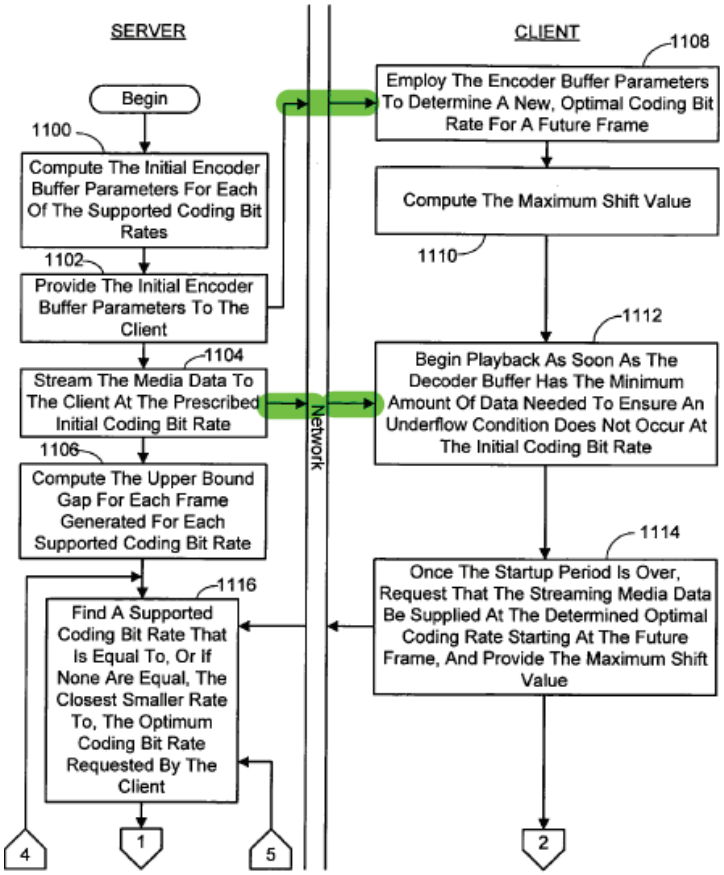

FIG. 11A

115. The server is implemented on "a general purpose computing device" (EX1004, ¶0051), which "includes a modem 172 or other means for establishing communications over…the Internet" (EX1004, ¶0057) and includes "program modules…that perform particular tasks" such as transmitting the streaming media data to the client. EX1004, ¶¶0048-0057, FIG. 1.

116. This is consistent with the '101 patent's disclosure of a transmission device and transmitting unit, which discloses that the server device 10 is a transmission device that includes a content transmitting part 45. EX1001, 5:12-16, 5:64-67, 8:46-58 ("content transmitting part 45 transmits the content data, which is one content coded with any one code rate of a plurality of code rates different from each other, to the terminal devices 20a to 20c.")

(b) …transmitting … one content coded with any one code rate of a plurality of code rates different from each other to the reception device

117. *Chou* discloses the "streaming media data… exhibits one of a number of coding bit rates." EX1004, ¶0021. *See also*, ¶¶0022, 0031 ("the server generates data streams that exhibit one of a number of coding bit rates …, and transmits data streams at the most appropriate supported coding bit rate,"), 0115 ("controlling a coding bit rate of streaming media data being transmitted to a client from a server over a computer network"), 0118 ("content is encoded into several (typically 5-7) independent streams at different coding bit rates") and Claim 2. *Chou* teaches that the coding bit rate can be expressed as "the average number of bits needed to encode one second of content," which also teaches the number of bits needed to reproduce one second of content at a normal playout rate. EX1004, ¶0007.

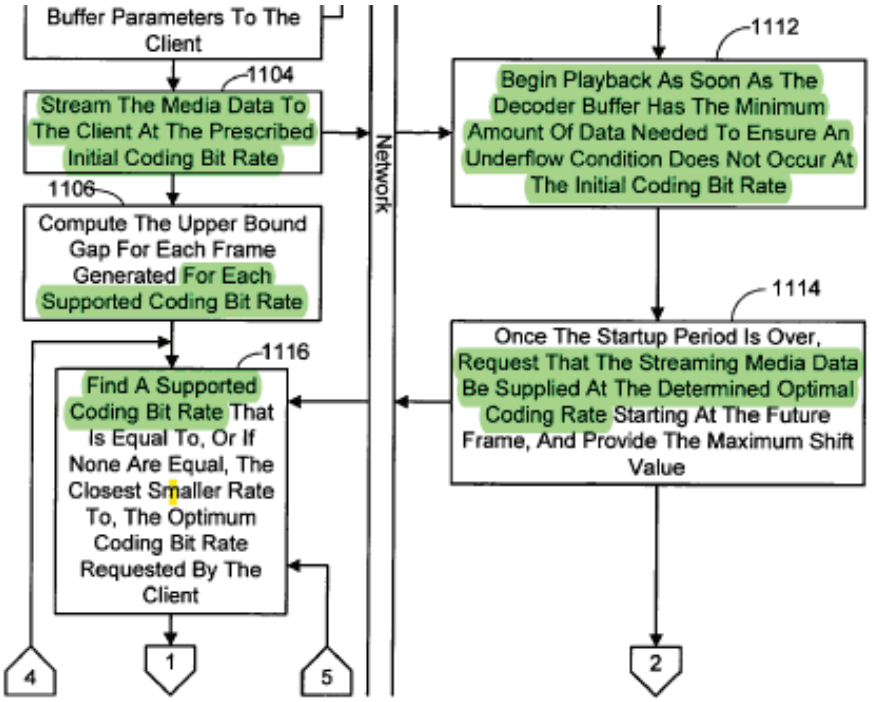

FIG. 11A

118. To the extent that [1b] might be deemed to be a means-plus-function limitation under 35 USC §112(6), [1b] is still taught by *Chou*. As explained above in this Section and in [1e], *Chou* teaches the recited function. *Chou* also teaches a structure for the transmitting unit. Particularly, *Chou* discloses a server implemented on "a general purpose computing device" (EX1004, ¶0051), which "includes a modem 172 or other means for establishing communications over… the Internet" (EX1004, ¶0057) and includes "program modules…that perform particular tasks" such as transmitting the streaming media data to the client. EX1004, ¶0048-0057, FIG. 1, FIG. 11A. This is consistent with the '101 patent's disclosure of a transmitting unit, which discloses that the server device 10 is a "transmission device"

that includes a content transmitting part 45. EX1001, 5:12-16, 5:64-67, 8:46-58 ("content transmitting part 45 transmits the content data, which is one content coded with any one code rate of a plurality of code rates different from each other, to the terminal devices 20a to 20c.").

119. Moreover, to the extent *Chou* were deficient (it is not), [1b]'s structure and functionality were also generally known by POSITAs (see, e.g., §III), rendering it obvious even if not explicitly taught by *Chou*.

120. My above analysis is consistent with the assertion of infringement against Petitioner's product, as shown in the following excerpt, advanced in the related litigation:

[redacted]

[redacted]

[redacted]

[redacted]

EX1031, 5-11.

iii. [1c] the reception device being equipped with a content reproducing unit for, while receiving the content data transmitted by the transmission device, storing received data of the content data into a storage device and also reproducing the content based on the stored data,

121. *Chou* discloses and teaches the reception device (e.g., client) being equipped with a content reproducing unit for, while receiving the content data (e.g., streaming media data) transmitted by the transmission device (e.g., server), storing received data of the content data into a storage device (e.g., buffer) and also reproducing the content based on the stored data. EX1004, Abstract, ¶¶0002, 0005, 0007, 0020, 0028, 0059, 0067, 0070, 0115 FIGS. 5, 11A-C.

122. For clarity of discussion, claim element [1c] is discussed in two parts: (1) while receiving the content data transmitted by the transmission device, storing received data of the content data into a storage device; and (2) while receiving the content data transmitted by the transmission device, also reproducing the content based on the stored data.

123. As to the first part of claim element [1c], *Chou* discloses that "[c]ontent enters the buffer when it arrives at the client over the network, at a rate of r_a/r_c seconds of content per second of real time" EX1004, ¶0007 (emphasis added). *See also*, EX1007, ¶¶0019, 0021, 0023, 0031, 0113, 0115, 0117 and FIGS. 11A-C. This

teaches the claim element: while receiving the content data transmitted by the transmission device, storing received data of the content data into a storage device.

124. As to the second part of claim element [1c], *Chou* discloses the client "begin[s] playback… of the streaming media data when the client's decoder buffer has the minimum amount of data therein that is needed to ensure an underflow condition does not occur[.]" EX1004, ¶¶0028, 0115. The POSITA would have understood that initial playback may be delayed until the buffer reaches a minimum fullness, but when the minimum amount is reached, the content begins playing out from the buffer while content is being received. EX1004, FIG. 6. Moreover, *Chou* discloses that "[o]ver time, as the slope approaches 1/v, r/r approaches V and the buffer remains relatively constant (except for changes due to variations in the instantaneous coding bit rate), since content is received and played back at the same speed v." EX1004, ¶0075.

125. Additionally, *Chou* teaches that it is important to "control buffer duration to prevent the buffer from underflowing." EX1004, Abstract. The POSITA would have understood that buffer fullness and duration are impacted by the rates at which at least two events are occurring during operation: the rate at which the buffer is filled by content from the server, and the rate at which content is being reproduced, or played out, from the buffer by the client. Thus, *Chou* teaches "the reception device being equipped with a content reproducing unit for, while receiving the

content data transmitted by the transmission device, storing received data of the content data into a storage device" as claimed.

126. *Chou's* stated objective is driven by the reality that as content is received at the client from the server, it is being stored in the client buffer, thereby filling the buffer (first part of element 1[c]). At the same time content is being received, the client is reproducing content from the buffer, thereby draining the buffer (second part of element 1[c]). These simultaneous events are what can lead to issues such as underflow and overflow. Thus, to avoid buffer underflow, and to avoid playback delays, the POSITA would have understood to store content data into the buffer while it is being received. Likewise, to avoid overflow, and to avoid playback delays, the POSITA would have understood to reproduce, or playout, content data from the buffer while content data is being received. Thus, the POSITA would have understood that while receiving content data transmitted by the server device, the client is also reproducing the content based on the stored data.

127. *Chou* further discloses:

> Preventing the client buffer from underflowing, while keeping the average coding bit rate close to the average transmission bit rate of the network, meets two of the aforementioned user expectations. Namely, if the buffer never underflows, it allows for continuous playback. In addition, keeping the average coding bit rate close to the average transmission bit rate of the network means the data is played back with the highest possible quality given the average communication bandwidth available.

EX1004 ¶0020.

128. This teaches that the receiving/storing of content into the client's decoder buffer is controlled to avoid buffer underflow and thereby allow for continuous playback of the received/stored content from the buffer. Thus, to avoid buffer underflow, *Chou* teaches storing the content in the buffer as it is received from the server, and also receiving content from the server and storing it in the buffer while the content from the buffer is being played out, or reproduced. Simply put, if reproduction of content from the buffer were not occurring while content is being received and stored in the buffer, the buffer would likely eventually overflow. Likewise, if content were being played out, but not being stored in the buffer as it is received, an underflow condition is likely to occur.

129. *Chou* further teaches that one way to control receiving/storing content from the server into the buffer, while content is also being played out and reproduced from the buffer, is to control the average coding rate – the amount of content data for reproducing content at constant speed for a unit time. EX1004, Abstract. This controls how quickly the buffer is filled or replenished. EX1004, Abstract. Controlling the rate of filling the buffer with content from the server to prevent underflow while the content is playing as taught by *Chou* teaches "while receiving content data transmitted by the server device, … reproduce the content based on the stored data" as claimed.

130. Additionally, *Chou* teaches: "The coding bit rates requested by the client are those estimated to provide a high quality playback of the streaming media data while still keeping a decoder buffer of the client used to receive streaming media data from the server filled to a desired duration level." EX1004, ¶0021. This teaches both aspects of claim element [1c]. Particularly, "keeping a decoder buffer of the client used to receive streaming media data from the server filled to a desired duration level" teaches storing the received data in a decoder buffer (client's storage device) while it is being received. And, "provide a high quality playback of the streaming media data while still keeping [the client's] decoder buffer" full, which is kept full by storing the data while it is being received, teaches reproducing the content data while content data is being received.

131. *Chou's* discussion of FIGs. 11A-11C (reproduced in part below, highlighted) also teaches [1c]. Chou's discussion provides that the:

> "server then streams the media data to the client at a prescribed initial coding bit rate, during a startup period (process action 1104). … The **client also begins playback of the frames it has received as soon as the client's decoder buffer has the minimum amount of data therein** that is needed to ensure an underflow condition does not occur at the initial coding bit rate **and continues to playback each frame received thereafter** (process action 1112)."

Ex1004, ¶0115 (emphasis added).

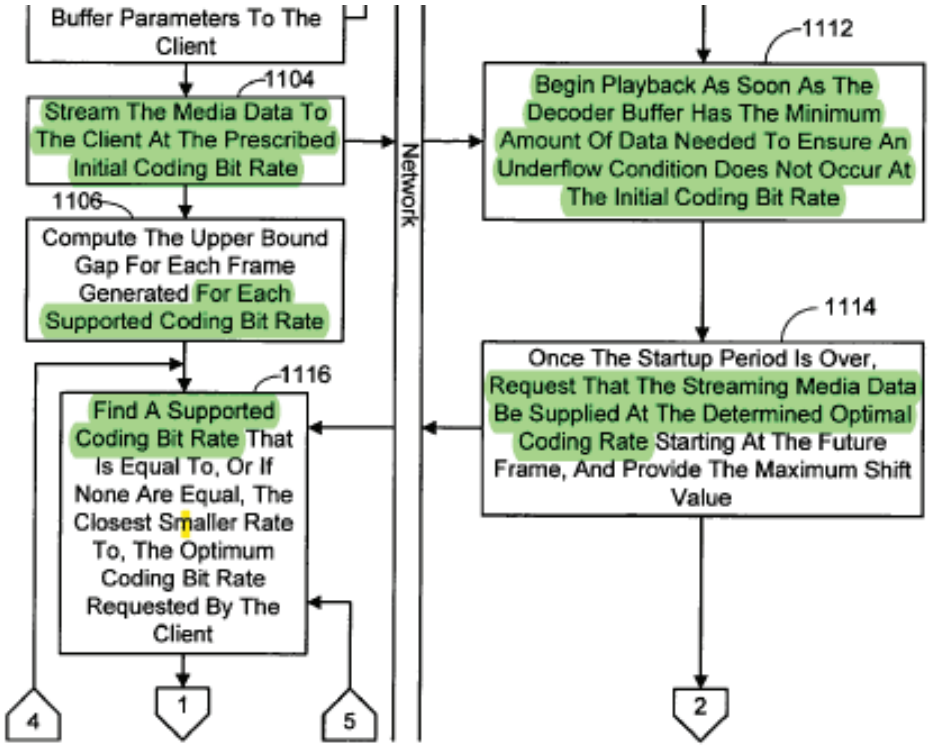

FIG. 11A

132. As described above, *Chou* teaches the client playing back (reproducing) content from the buffer. EX1004, ¶¶0005-0007, 0020, 0027, 0028, 0059 0067, 0070, 0115, Claims 1, 15 18, 19, 47, 48, FIGs. 11A-11C.

133. Moreover, to the extent *Chou* were deficient (it is not), AAPA also teaches [1c]. Particularly, AAPA teaches "a transmission device and a plurality of reception devices … communicating with each other," in which "the transmission device transmits content data representing content (video, audio, etc.) to each of the reception devices. Each of the reception devices stores received data among the content data into a storage device (a buffer) while receiving the content data. Moreover, each of the reception devices starts reproduction of content based on the

stored data at the reproduction start time." EX1001, 1:11-31. Thus, the POSITA would have understood that AAPA teaches while receiving content data transmitted by the server device, the client is storing received data of the content data into a storage device and also reproducing the content based on the stored data.

134. To the extent that [1c] might be deemed to be a means-plus-function limitation under 35 USC §112(6), [1c] is still taught by *Chou*. As explained above in this Section and in [1f], *Chou* teaches the recited function. *Chou* also teaches a structure for the content reproducing unit. Particularly, *Chou* discloses a client that "begins playback of the frames it has received as soon as the client's decoder buffer has the minimum amount of data therein that is needed to ensure an underflow condition does not occur at the initial coding bit rate and continues to playback each frame received thereafter (process action 1112)." Ex1004, ¶0115. This is consistent with the '101 patent's disclosure of a content reproducing unit, which discloses that a generic "content reproducing part 33 [of a terminal device 20a], while receiving content data transmitted by the server device 10, stores received data of the content data into the storage device and reproduces content based on the stored data (performs streaming reproduction)." EX1001, 9:51-55.

135. Moreover, to the extent Chou were deficient (it is not), [1c]'s structure and functionality were also generally known by POSITAs (*see, e.g.*, §III), rendering it obvious even if not explicitly taught by *Chou*.

136. My above analysis is consistent with the assertion of infringement against Petitioner's product, as shown in the following excerpt, advanced in the related litigation:

[redacted]

[redacted]

EX1031, 12-13.

iv. [1d] the distribution system, comprising a code rate determining unit for determining the code rate based on a remaining time before reproduction start time set as time at which the reception device starts reproduction of the content from a present moment and based on an available reproduction time, which is a time available for reproducing the content based on the content data stored in the storage device of the reception device, wherein:

137. *Chou* teaches the distribution system, comprising a code rate determining unit for determining the code rate (e.g., coding bit rate) based on a remaining time before reproduction start time (e.g., playback deadline) set as the time at which the reception device (e.g., client) starts reproduction of the content from a present moment and based on an available reproduction time (e.g., buffer duration), which is a time available for reproducing the content based on the content

data stored in the storage device (e.g., buffer) of the reception device, rendering it obvious. EX1004, Abstract, ¶¶0007, 0019-0026, 0029-0032, 0067, 0069-0070, 0074, 0081, 0123, 0130, FIGs. 5-8, claims 1, 2, 13, 14.

(a) The distribution system, comprising a code rate determining unit for determining the code rate…

138. As an initial matter, *Chou* teaches "determining the code rate." For example, *Chou* discloses "the present system and process includes techniques for determining the most appropriate coding bit rate, from the available rates, in view of the optimum coding bit rate identified." EX1004, ¶0031 (emphasis added). *See also id.* at ¶0022 ("determining on a frame-by-frame basis a coding bit rate"), ¶0081, 00115-00117 ("[t]he client then employs the encoder buffer parameters and the upper bound gap value provided by the server to determine a new, optimal coding bit rate" (emphasis added)), and Claims 2-5.

139. *Chou* also discloses "controlling a coding bit rate of streaming media data being transmitted to a client from a server," which involves "dynamically adjusting the coding bit rate of the streaming media data." EX1004, ¶¶0019-0026, 0029-0032, 0070.

140. *Chou* describes the coding bit rate as "the average number of bits needed to encode one second of content." EX1004, ¶0007. *Chou's* coding bit rate teaches the code rate claimed in the '101 patent.

141. *Chou* teaches that either the client or the server are a code rate determining unit. For example, *Chou* states:

> Given this, the present system and process includes techniques for **determining the most appropriate coding bit rate**, from the available rates, in view of the optimum coding bit rate identified by the client. It is noted that the available rates could be provided to the client from the server in a preamble to the streaming media data. In such a case, **the client itself would perform the analysis** and request the resulting supported coding bit rate from the server. **However, in an alternate embodiment**, the client would request the optimum coding bit rate it identified, and **the server would perform the analysis to determine which supported rate is most appropriate**.

EX1004, ¶0031 (emphasis added).

142. *Chou* reiterates that either the transmission device or the reception device can determine the code rate. For example, *Chou* discloses:

> "The preceding discussions have assumed that the control process for adapting the stream or its bit rate to the prevailing conditions is located within the client. This is called receiver-driven streaming because the client (i.e., the receiver) makes the decisions and informs the server (i.e., the sender). However, it should be clear that sender-driven streaming is also possible, in which the control process operates at the sending side."

EX1004, ¶0130.

(b) [determining the code rate] based on a remaining time before reproduction start time set as time at which the reception device starts reproduction of the content from a present moment

143. *Chou* teaches controlling the buffer duration to a desired amount. For example, *Chou* discloses that "coding bit rate control is formulated as a standard

problem…in which the client buffer duration is controlled as closely as possible to a target level." EX1004, ¶0019, Abstract. *Chou* teaches setting the coding bit rate to control the arrival time for each frame to attempt to achieve this desired target buffer duration. EX1004, ¶¶0027-0029. This target buffer duration is the difference between the reproduction start time (the playback deadline) and the target scheduled arrival time. EX1004, ¶¶0027-0029, 0070-75.

144. Specifically, *Chou* discloses that "[i]n regard to the target arrival time for each frame, these are chosen so as to make the amount of time between the target time of a frame and its playback time large enough, after the startup period, that network jitter, delays and throughput changes which may cause the actual arrival time of the frame to be after its target arrival time do not result in the frame arriving after its scheduled playback time." EX1004, ¶0027. In other words, in setting the target arrival time, "the amount of time between the target time of a frame and its playback time" must be considered. *Chou* further discloses that "[i]t is noted that in the present system and process, it is not the actual fullness of the client buffer that is controlled, but an upper bound on the time of arrival of bits into the client buffer, to a target level." EX1004, ¶0019. Based on this, it would have been clear to a POSITA that the selection of a code rate to be used for the frame to be encoded at the present time in *Chou*, which determines the number of bits to be transmitted for the frame, is done in a way that the actual arrival time of a frame at the reception

device is as close to the target arrival time as possible under the network condition known at the time. Since "the amount of time between the target time of a frame and its playback time" is known, the selection of a code rate to be used is based on the "remaining time before reproduction start time set as the time at which the reception device starts reproduction of the content from a present moment" as required by this claim phrase.

145. Accordingly, *Chou* teaches that, as part of, and at the time of, determining the code rate for a subject frame (the present moment), the code rate determining unit determines a playback deadline for the subject frame (the time reproduction will start from the present moment) and adjusts the code rate so that the subject frame arrives at the decoder buffer at or near its target scheduled arrival time. EX1004, ¶¶0027-0029, 0070-75. This target scheduled arrival time is selected to attempt to achieve a desired target buffer duration (or fullness), which is the difference between the determined reproduction start time and the target scheduled arrival time. EX1004, ¶¶0027-0029, 0070-75.

146. Particularly, with reference to FIG. 6 (reproduced below, highlighted), *Chou* describes frame playback deadlines and a target arrival schedule used to achieve a desired target buffer duration. EX1004, ¶¶0070-75. Here, *Chou* discloses that "[t]he gap between the playback deadline and the target schedule is the desired client buffer duration (in client time)." EX1004, ¶0074.

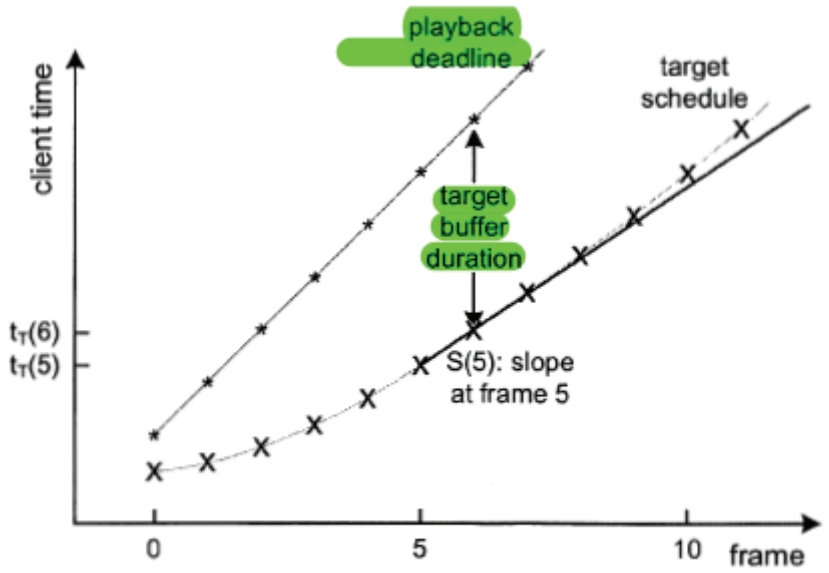

FIG. 6

147. This gap between the time at which *Chou's* system is determining the coding bit rate for a given frame (to meet the target arrival schedule) and the playback deadline for that frame, discloses the claimed "remaining time before reproduction start time set as time at which the reception device is to start reproduction of the content from a present moment." EX1004, ¶¶0070-75. Thus, *Chou* teaches controlling coding bit rate based on the time available for reproducing the content based on the content data stored in the buffer. EX1004, ¶¶0070-75.

148. *Chou* further teaches as part of this process that the system can examine the slope of the target arrival schedule as a way to adjust the coding rate to control the arrival time to attempt to meet that schedule. EX1004, ¶¶0070-75. *Chou* teaches using the relationship between the coding bit rate (the rate the system wants to

determine for a given frame) and the arrival time for that frame (based on the channel), and to adjust the rate to meet the target arrival schedule. EX1004, ¶¶0070-75. Particularly, *Chou* discloses that "[t]he slope of the target schedule relates the average coding bit rate to the average arrival rate" and gives this relationship as $r_c(n)/r_a$, where r_c is the coding bit rate and r_a is the arrival rate. EX1004, ¶0075. Accordingly, at the moment *Chou's* system is determining the new coding bit rate, it examines the desired target arrival time based on the target schedule for that frame (e.g., by looking at the slope) and adjusts the coding bit rate accordingly.

(c) And [determining the code rate] based on an available reproduction time, which is a time available for reproducing the content based on the content data stored in the storage device of the reception device

149. As part of determining the target arrival schedule and the coding bit rate to meet the target arrival schedule, *Chou* further teaches determining the code rate based on an available reproduction time, which is a time available for reproducing the content based on the content data stored in the buffer. First, *Chou* discloses "controlling a coding bit rate of streaming media data being transmitted to a client from a server" involves "dynamically adjusting the coding bit rate of the streaming media data to control the buffer duration." EX1004, ¶¶0019-0026, 0029-0032. The buffer duration is "[t]he size of the client buffer… expressed as the number of seconds of content in the buffer." EX1004, ¶0007. Therefore, the buffer duration

indicates a "number of seconds of content" that is available in the buffer. EX1004 ¶0007.

150. Furthermore, *Chou* teaches controlling this buffer duration to a desired amount. For example, *Chou* discloses that "coding bit rate control is formulated as a standard problem…in which the client buffer duration is controlled as closely as possible to a target level." EX1004, ¶0019. Thus, *Chou* examines the current buffer duration to determine whether the arrival time of a subsequent frame needs to be accelerated (to increase buffer duration) or delayed (to decrease buffer duration).

151. *Chou* further discloses "regulating the coding bit rate so that the client buffer does not underflow" and "the arrival times of all frames will certainly be earlier than their playback deadlines and thus uninterrupted playback will be ensured." EX1004, ¶0070.

152. *Chou* illustrates an example of playback deadlines in FIG. 5:

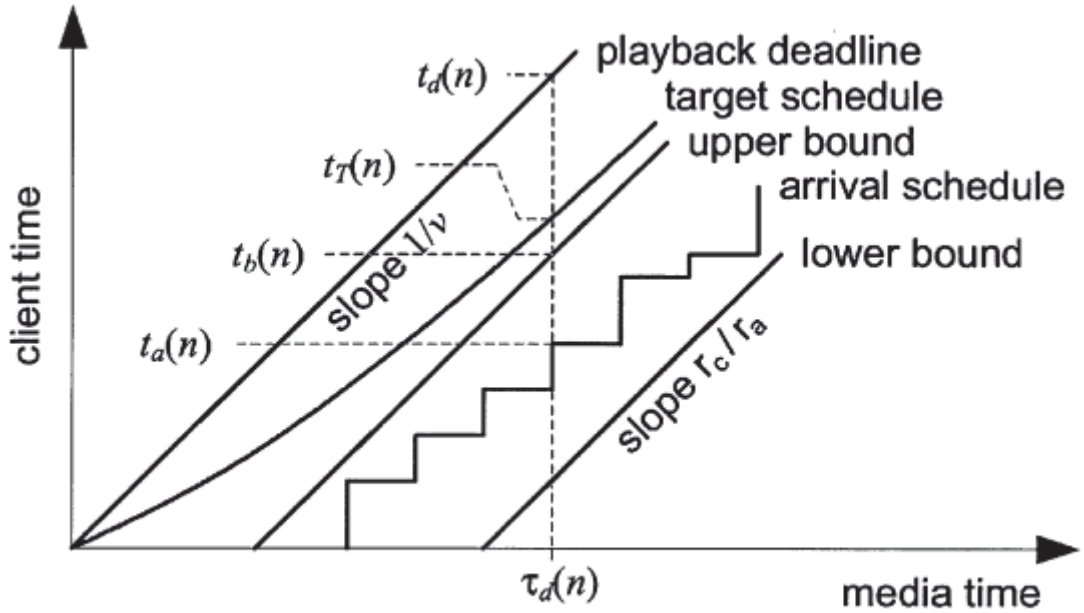

FIG. 5

EX1004, FIG. 5. Here, FIG. 5 illustrates playback deadlines as they relate to client time, which "refers to the clock running on the client used to play back the content" or the "real time at the time of media playback." EX1004, ¶0059, FIG. 5.

153. Therefore, at any time during playback, there are playback deadlines for frames yet to be played, and the time between a playback deadline of a frame and its arrival time ($t_d(n)$-$t_a(n)$) is the remaining time before that frame is to be played from its arrival time. EX1004, ¶¶0067-0068, 0070, 0074 ("The gap between the playback deadline and the target schedule is the desired client buffer duration (in client time)"), 0081 ("As each frame arrives at the client, a feedback loop can send a message to the server to adjust the coding bit rate"), FIGs. 5-6. This time is referred to by *Chou* as the client buffer duration, or simply buffer duration. EX1004, ¶0067

("the gap between a frame's arrival time and its playback deadline is the client buffer duration at the time of the frame arrival."). Thus, *Chou* teaches the "an available reproduction time, which is a time available for reproducing the content based on the content data stored in the storage device of the reception device."

154. To the extent that [1d] might be deemed to be a means-plus-function limitation under 35 USC §112(6), [1d] is still taught by *Chou*. As explained above in this Section, *Chou* teaches the recited function. *Chou* also teaches a structure for the code rate determining unit. Particularly, *Chou* discloses that either the client or the server are a code rate determining unit. For example, *Chou* states:

> Given this, the present system and process includes techniques for **determining the most appropriate coding bit rate**, from the available rates, in view of the optimum coding bit rate identified by the client. It is noted that the available rates could be provided to the client from the server in a preamble to the streaming media data. In such a case, **the client itself would perform the analysis** and request the resulting supported coding bit rate from the server. **However, in an alternate embodiment**, the client would request the optimum coding bit rate it identified, and **the server would perform the analysis to determine which supported rate is most appropriate**.

EX1004, ¶0031 (emphasis added). *See also id.* at ¶0130.

155. This is similar to the disclosure in the '101 patent, which states that "code rate determining part 47 of the server device 10…determines a code rate for the terminal device having transmitted the available reproduction time information,

based on a remaining time before the acquired (i.e., set) reproduction start time." EX1001, 10:7-18.

156. [1d]'s structure and functionality were also generally known by POSITAs (*see, e.g.*, §III), rendering it obvious even if not explicitly taught by *Chou*.

157. My above analysis is consistent with the assertion of infringement against Petitioner's product, as shown in the following excerpt, advanced in the related litigation:

[redacted]

[redacted]

EX1031, 13-15

v. [1e] the content transmitting unit is configured to change the code rate of the content data to be transmitted to the reception device to the determined code rate; and

158. *Chou* teaches that the content transmitting unit is configured to change the code rate (e.g., coding bit rate) of the content data (e.g., streaming media data) to be transmitted to the reception device (e.g., client) to the determined code rate, thereby rendering it obvious. EX1004, Abstract, ¶¶0019, 0021, 0031, 0070.

159. For example, *Chou* teaches changing the code rate of the content data by generating or selecting a stream with a desired code rate:

> [T]he server generates data streams that exhibit one of a number of coding bit rates supported by the server, and transmits data streams at

> the most appropriate supported coding bit rate closest to the rate requested by the client….

EX1004, ¶0031. *Chou* further discloses:

> Initially, the server chooses the coding bit rate during a startup period. However, after the startup period, the client provides coding bit rate requests to the server. In response, the server transmits the streaming media data at the most appropriate supported coding bit rate closest to the rate requested by the client.

EX1004, ¶0021.

160. *Chou* further describes changing or switching the code rate with reference to FIG. 10 (reproduced, below, highlighted). Here, *Chou* discloses that:

> the **<u>server must choose a stream</u>** that causes the upper bound to shift up no more than some amount $\Delta_{max}g(n-1)$ supplied to it by the client. The client supplies $\Delta^{max}g(n-1)$ to the server in its feedback along with $r_c(n)$, shortly after client time $t_a(n-2)$ (after frame n−1 has already begun streaming). Upon receiving the feedback, **<u>the server selects a stream with coding bit rate</u>** {circumflex over (r)}$_c$(n) as high as possible such that {circumflex over (r)}$_c$(n)≦r_c(n) and, if {circumflex over (r)}$_c$(n)>{circumflex over (r)}$_c$(n−1) (i.e., **<u>if it is a switch up in rate</u>**), then $g^{new}(n-1)-g^{old}(n-1)\leqq\Delta^{max}g(n-1)$, where $g^{new}(n-1)$ and $g^{old}(n-1)$ are illustrated in FIG. 10. The constraint given by $\Delta^{max}g(n-1)$ is not applied if it is a switch down in rate.

EX1004, ¶0098 (emphasis added).

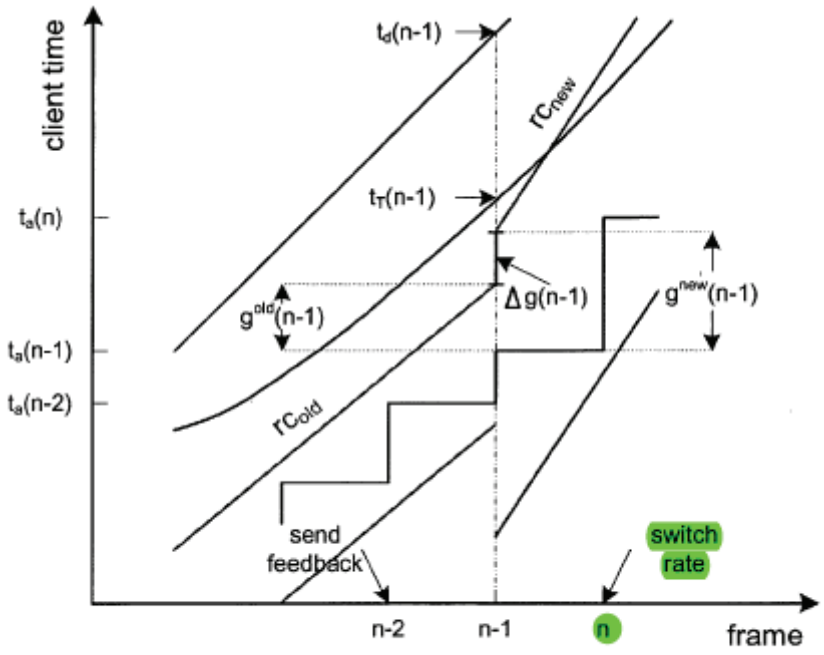

FIG. 10

161. [1e]'s functionality was also generally known by POSITAs (*see, e.g.*, §III), rendering it obvious even if not explicitly taught by *Chou*.

162. My above analysis is consistent with the assertion of infringement against Petitioner's product, as shown in the following excerpt, advanced in the related litigation:

[redacted]

[redacted]

[redacted]

EX1031, 15-18.

vi. [1f] the content reproducing unit is configured to start reproduction of the content at the set reproduction start time.

163. *Chou* teaches the content reproducing unit is configured to start reproduction of the content (e.g., streaming media data) at the set reproduction start time (e.g., playback deadline), thereby rendering it obvious. EX1004, ¶¶0019-0020, 0059, 0067, 0115, FIG. 5.

164. For example, *Chou* discloses that the client provides "continuous playback" when the streaming media data arrives at the client before the "playback deadline…, which is the time…at which [a] frame…is scheduled to be played[.]" EX1004, ¶0067. In other words, the playback deadline is a "schedule at which frames are removed from the decoder buffer and instantaneously decoded for presentation." EX1004, ¶0060. Thus, for each frame in the streaming media data received by the client during a streaming session, the client plays back the frame at its playback deadline, or the scheduled time at which the frame is to be played. EX1004, ¶¶0060, 0067.

165. *Chou* provides further detail at ¶0059, where *Chou* states:

> $\tau_d(0)$, $\tau_d(1)$, $\tau_d(2)$, . . . is used to express the playback deadlines of frames 0,1,2, . . . in media time, while $t_d(0)$,$t_d(1)$,$t_d(2)$, . . . is used to express the playback deadlines of frames 0,1,2, . . . at the client. Content may be played back at a rate v times real time.

EX1004, ¶0059. *Chou* further describes an example of this playback deadline, with reference to FIG. 5, where the playback deadline "is the time $t_d(n)$ at which frame n is scheduled to be played (after instantaneous decoding)." EX1004, ¶0067.

166. [1f]'s functionality was also generally known by POSITAs (*see, e.g.*, §III), rendering it obvious even if not explicitly taught by *Chou*.

167. My above analysis is consistent with the assertion of infringement against Petitioner's product, as shown in the following excerpt, advanced in the related litigation:

[redacted]

[redacted]

EX1031, 18-20.

B. Claim 2

i. [2] The distribution system according to claim 1, wherein the code rate determining unit is configured to determine a value becoming smaller as the available reproduction time becomes shorter than a target available reproduction time,

which is a target value of the available reproduction time, and becoming smaller as the remaining time becomes shorter, as the code rate.

168. *Chou* teaches wherein the code rate determining unit is configured to determine a value becoming smaller as the available reproduction time (e.g., buffer duration) becomes shorter than a target available reproduction time (e.g., buffer duration target level), which is a target value of the available reproduction time, and becoming smaller as the remaining time becomes shorter, as the code rate, rendering it obvious. EX1004, ¶¶0007, 0123, 0074-0075, 0070, 0093.

169. For example, *Chou* teaches that "when the buffer [duration] drains…below its target level, the controller will rapidly switch the coding bit rate…down to the coding bit rate below the arrival rate." EX1004, ¶0123.[7] Here, when the buffer duration, which indicates "the number of seconds of content" available "in the buffer," is below a target level, the coding bit rate is switched down to a smaller coding bit rate. EX1004, ¶¶0007, 0123. As the buffer duration is "expressed as the number of seconds of content in the buffer", the target level therefore is a target number of seconds to be available in the buffer. EX1004, ¶0007. Because the buffer duration is expressed in terms of time, a target level for the buffer duration is also expressed in terms of time. Thus, a smaller coding bit rate is

[7] The context of this paragraph makes clear that "buffer" here refers to "buffer duration."

determined based on an available number of seconds of content in the buffer becoming shorter than a target number of seconds of content in the buffer.

170. This is depicted in FIG. 6 of *Chou*:

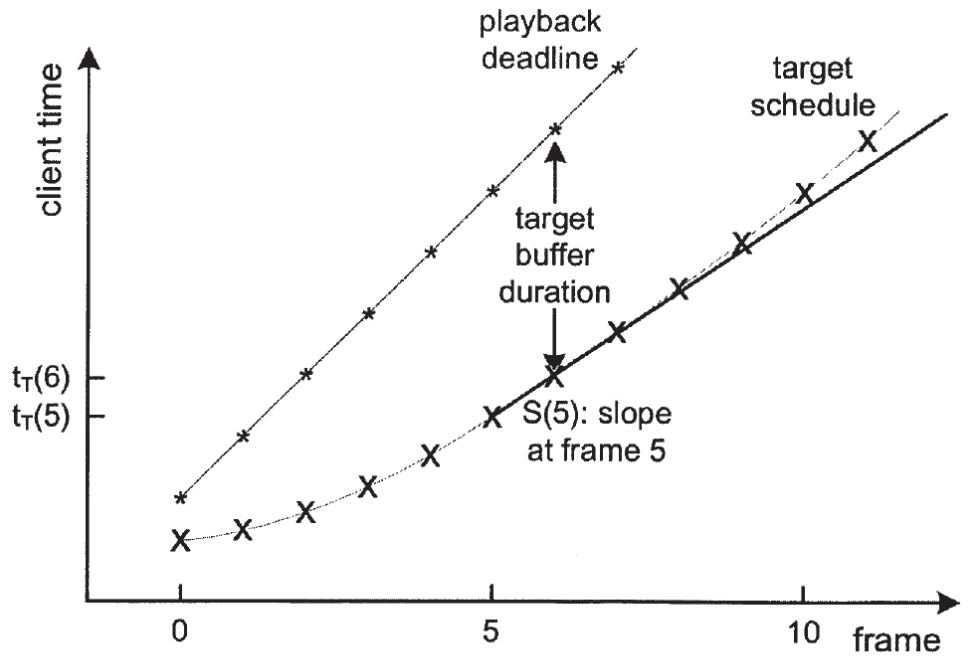

FIG. 6

EX1004, FIG. 6. *Chou* teaches that in this illustration of the target schedule, the "gap between the playback deadline and the target schedule is the desired client buffer duration." EX1004, ¶0074. Further, the slope of the target schedule at frame n is represented by "s(n)," which relates to the code rate based on the equation $s(n) = r_c(n)/r_a$ when the arrival rate is constant. EX1004, ¶0075. *Chou* then explains that "initially, when the slope was low," i.e., the target buffer duration was small, more content is received per unit of time than is played out, "causing the client buffer…to grow." EX1004, ¶0075. This can be seen in FIG. 6, where the target

buffer duration gets larger as the number of frames increases. It can also be seen in FIG. 6 that as the target buffer duration gets larger, the slope of the target schedule gets larger. Based on the slope equation above, assuming the arrival rate is constant, this means that as the target buffer duration gets larger, the code rate also increases. In other words, as the target buffer duration gets larger, so too does the code rate. By inspection of the slope equation, the converse is also true. *See* EX1004, ¶0123 ("when the buffer drains back below its target level, the controller will rapidly switch the coding bit rate back down to the coding bit rate below the arrival rate"). That is, as the buffer duration decreases to be smaller than the target buffer duration, the slope of the target schedule decreases so that the client buffer will grow. The result of this decreased slope of the target schedule equates to a decrease in the code rate, as shown the slope equation above. Thus, as the buffer duration (available reproduction time) falls below a target buffer duration (target available reproduction time), the code rate decreases (gets smaller).

171. Furthermore, *Chou* teaches "regulating the coding bit rate" so that "the arrival times of all frames will certainly be earlier than their playback deadlines and thus uninterrupted playback will be ensured." EX1004, ¶0070. The coding bit rate is regulated based on a "target schedule" that "introduce[s] a margin of safety" for the playback deadline. *Id*. *Chou* explains that when playback initially starts, "the target schedule starts at the same time as the playback deadline," and normal

behavior would be "decreasing the coding bit rate" because the remaining time between the present client time and the playback deadline is small. EX1004, ¶0093. This example confirms that normal behavior is to "decreas[e] the coding bit rate when the remaining time between the client time and the playback deadline is short." EX1004, ¶0093. Thus, *Chou* teaches that as the remaining time between the client time and the playback deadline is short (remaining time becomes shorter), the coding bit rate is decreased, or smaller.

172. To the extent that claim 2 might be deemed to be a means-plus-function claim under 35 USC §112(6), claim 2 is still taught by *Chou*. As explained above, *Chou* teaches the recited function. Further, as explained in [1d], *Chou* also teaches a structure for the code rate determining unit.

173. My above analysis is consistent with the assertion of infringement against Petitioner's product, as shown in the following excerpt, advanced in the related litigation:

[redacted]

[redacted]

EX1031, 20-22.

C. Claim 4

i. [4] The distribution system according to claim 1, wherein the code rate determining unit is configured to determine the code rate with every change period set in advance.

174. *Chou* teaches the code rate determining unit is configured to determine the code rate with every change period (frame rate) set in advance, rendering it obvious.

175. For example, *Chou* teaches adjusting "the coding bit rate" as "each frame arrives at the client." Ex1004, ¶0081; *see also* EX1004, ¶¶0022 (determine coding bit rate on a "frame-by-frame" basis), 0025 (determine coding bit rate on a "frame-by-frame" basis), 0115 ("determine on a frame-by-frame basis a new, optimal coding bit rate for a future frame"). More specifically, *Chou* teaches that "the coding bit rate $r_c(n+1)$ for frame n+1 must already be determined by time $t_a(n)$. Indeed, at time $t_a(n)$, frame n+2 is the earliest frame for which the controller can determine the coding bit rate. Hence at time $t_a(n)$, the controller's job must be to choose $r_c(n+2)$." Ex1004, ¶0081.

176. *Chou* further teaches that the frame rate can be constant. EX1004, ¶0079 ("the frame rate f and the average arrival rate {tilde over (r)}a are relatively constant.") *See also* EX1004, ¶¶0069, 0084. *Chou* also discloses using a virtual frame rate that is, for example, preset at "1 frame per second." EX1004, ¶¶0084-0085. Thus, *Chou* teaches that the code rate can be determined every time an arbitrarily selected virtual frame rate time elapses, which, in the example provided by *Chou*, is once every second. This is akin to the '101 patent's description of the "change period," which it describes as being "every time the transmission period

(the change period) elapses," which as an example, can be "five seconds." EX1001, 13:10-13, 15:35-39.

177. Thus *Chou* teaches determining the code rate with every change period (e.g., frame rate) set in advance.

178. To the extent that claim 4 might be deemed to be a means-plus-function claim under 35 USC §112(6), claim 4 is still taught by *Chou*. As explained above, *Chou* teaches the recited function. Further, as explained in [1d], *Chou* also teaches a structure for the code rate determining unit.

179. My above analysis is consistent with the assertion of infringement against Petitioner's product, as shown in the following excerpt, advanced in the related litigation:

[redacted]

[redacted]

EX1031, 22-23

D. Claim 5

i. [5] The distribution system according to claim 1, further including a plurality of the reception devices, the distribution system further comprising a synchronous reproduction controlling unit for matching reproduction positions of the content to be reproduced by the plurality of the reception devices, respectively, with each other among the plurality of the reception devices.

180. *Chou* teaches claim 5, rendering it obvious. *Chou* teaches the distribution system of claim 1. *Supra* §IX.A. Claim 5's structure and functionality were generally known by POSITAs, rendering it obvious in view of *Chou* even if not explicitly taught by *Chou*. The '101 patent's Background Art Section contains AAPA that provides evidence of the POSITA's knowledge at the time of the alleged invention.

181. For example, the '101 patent's Background Art Section describes

> "a **known** distribution system that includes a transmission device and **a plurality of reception devices** configured to be capable of communicating with each other and **allows the plurality of reception devices to synchronously reproduce content**."

EX1001, 1:12-15. (emphasis added)

182. This AAPA further states that:

> a distribution system described in Patent Document 1 **matches time of a clock disposed to each of the plurality of reception devices with time of a reference clock**. Moreover, the transmission device transmits reproduction start time, which is time that the reception device starts reproduction of content, to each reception terminal.
>
> Then, the transmission device transmits content data representing content (video, audio, etc.) to each of the reception devices. Each of the reception devices stores received data among the content data into a storage device (a buffer) while receiving the content data. Moreover, **each of the reception devices starts reproduction of content based on the stored data at the reproduction start time. As a result, it is possible to match the positions to reproduce the content with each other among the plurality of reception devices**.

EX1001, 1:15-31. (emphasis added). The AAPA further notes that it was known before the '101 patent to have a system "that allows a plurality of reception devices to synchronously reproduce content, …" and "it is possible to match positions to reproduce content with each other between the first reception device and the second reception device." EX1001, 1:32-48 (emphasis added).

183. Accordingly, as recognized and evidenced by the AAPA, the POSITA's knowledge at the time included knowledge that a distribution system could have "including a plurality of the reception devices," as well as "a synchronous reproduction controlling unit for matching reproduction positions of the content to

be reproduced by the plurality of the reception devices, respectively, with each other among the plurality of the reception devices" as recited in Claim 5.

184. It is my understanding that the AAPA may be used in this fashion in an *inter partes* review proceeding to provide a factual foundation as to what a POSITA would have known at the time of the alleged invention. *Qualcomm Incorporated v. Apple Inc.*, Nos. 20-1558, 20-1559 (Fed. Cir. Feb. 1, 2022), citing *Randal Manufacturing v. Rea*, 733 F.3d 1355, 1362–63 (Fed. Cir. 2013), and *McCoy v. Heal Sys., LLC*, 850 F. App'x 785, 789 (Fed. Cir. 2021) ("The Board did not err by accepting the specification's own assertions of what is well known in the art.").

185. To the extent that claim 5 might be deemed to be a means-plus-function claim under 35 USC §112(6), claim 5 is still taught by *Chou* as evidenced by AAPA. As explained above, *Chou* as evidenced by with AAPA teaches the recited function. AAPA also teaches a structure for the synchronous reproduction controlling unit. Particularly, AAPA recites that the "transmission device," "first reception device," and "second reception device," work in concert to synchronously reproduce content at the reproduction start time. EX1001, 1:32-49.

186. This is similar to the disclosure in the '101 patent, which states that "[w]hen the present time reaches the stored reproduction start time, the synchronous reproduction controlling part 32 outputs a reproduction start instruction." EX1001, 8:37-45.

187. My above analysis is consistent with the assertion of infringement against Petitioner's product, as shown in the following excerpt, advanced in the related litigation:

[redacted]

EX1031, 23-24.

E. Claim 7

i. [7] The distribution system according to claim 5, wherein the content transmitting unit is configured to, when second reproduction start time, which is reproduction start time set for a second reception device as one of the plurality of the reception devices, is later than first reproduction start time, which is reproduction start time set for a first reception device as another one of the plurality of the reception devices, estimate a reproduction position of the content being

> **reproduced by the first reception device at the second reproduction start time and transmit a portion of the content data at and after the estimated reproduction position to the second reception device.**

188. *Chou* teaches claim 7, rendering it obvious. *Chou* teaches the distribution system of claim 1 and claim 5. *Supra* §§IX.A, IX.D. Additionally, claim 7's structure and functionality were generally known by POSITAs, rendering the claim obvious in view of *Chou* even if not explicitly taught by Chou.

189. The '101 patent's Background Art Section contains AAPA that provides evidence of the POSITA's knowledge at the time of the alleged invention. Particularly, the '101 patent's Background Art Section discloses:

> [A] system that allows a plurality of reception devices to synchronously reproduce content even if time to start reproduction of the content varies depending on the reception device. In this distribution system, while a first reception device is reproducing content, a second reception device estimates a time required to start reproduction of the content and determines reproduction start time based on the estimated time. Then, the second reception device transmits the determined reproduction start time to the transmission device.
>
> Consequently, the transmission device transmits, to the second reception device, content data to be transmitted to the first reception device at and after the reproduction start time.

EX1001, 1:32-49. Thus, Patent Document 2 teaches a second reproduction start time for a second reception device (the estimated time required to start reproduction of the content at the second reception device) that is later than a first reproduction start time for a first reception device (time to start reproduction of content varies

depending on the reception device) and a transmitting unit that estimates a reproduction position of the content being reproduced by the first reception device at the second reproduction start time and transmit a portion of the content data at and after the estimated reproduction position to the second reception device (transmission device transmits, to the second reception device, content data to be transmitted to the first reception device at and after the reproduction start time).

190. To the extent that claim 7 might be deemed to be a means-plus-function limitation under 35 USC §112(6), claim 7 is still taught by *Chou*. As explained above, *Chou* teaches the recited function. Further, as explained in [1b], *Chou* also teaches a structure for the content transmitting unit.

F. Claim 11

191. Claim 11 includes substantially the same recitations as claim 1, but is cast as a method claim, and does not recite the content transmitting unit, content reproducing unit or the code rate determining unit. Therefore, for the same reasons explained above in §IX.A *Chou* teaches all the limitations of claim 11.

i. [11a] A distribution method applied to a distribution system including a transmission device and a reception device configured to be capable of communicating with each other, the distribution method comprising:

192. *See* [1a]. *Chou* further teaches a distribution method applied to a distribution system. For example, *Chou* discloses and teaches a "*process* for

controlling a coding bit rate of streaming media data being transmitted to a client from a server[.]" EX1004, ¶0019 (emphasis added).

ii. [11b] transmitting content data, which is one content coded with any one code rate of a plurality of code rates different from each other, to the reception device, by the transmission device;

193. *See* [1b].

iii. [11c] while receiving the content data transmitted by the transmission device, storing received data of the content data into a storage device and also reproducing the content based on the stored data, by the reception device;

194. *See* [1c].

iv. [11d] determining the code rate based on a remaining time before reproduction start time set as time at which the reception device starts reproduction of the content from a present moment, and based on an available reproduction time, which is a time available for reproducing the content based on the content data stored in the storage device of the reception device;

195. *See* [1d].

v. [11e] changing the code rate of the content data to be transmitted to the reception device to the determined code rate, by the transmission device; and

196. *See* [1e].

vi. [11f] starting reproduction of the content at the set reproduction start time, by the reception device.

197. *See* [1f].

G. Claim 12

i. [12a] The distribution method according to claim 11, further comprising: [12b] determining a value becoming smaller as the available reproduction time becomes shorter than a target available reproduction time, which is a target value of the available reproduction time, and becoming smaller as the remaining time becomes shorter, as the code rate.

198. *See* claim 2.

H. Claim 14

i. [14a] The distribution method according to claim 11, further comprising:[14b] determining the code rate with every change period set in advance.

199. *See* claim 4.

I. Claim 15

i. [15a] The distribution method according to claim 11, applied to the distribution system including a plurality of the reception devices, the distribution method further comprising: [15b] matching reproduction positions of the content to be reproduced by the plurality of the reception devices, respectively, with each other among the plurality of the reception devices.

200. *See* claim 5.

J. Claim 16

201. Claim 16 recites substantially the same recitations as [1a]-[1b] and [1d]-[1e], but is drafted to recite the transmission device rather than the distribution system. To the extent that Patent Owner may argue that *Chou* teaches operation by

a client/reception device rather than a server/transmission device for any of the claim elements of Claim 16 and its dependents, this is incorrect. For example, *Chou* states:

> Given this, the present system and process includes techniques for **determining the most appropriate coding bit rate**, from the available rates, in view of the optimum coding bit rate identified by the client. It is noted that the available rates could be provided to the client from the server in a preamble to the streaming media data. In such a case, **the client itself would perform the analysis** and request the resulting supported coding bit rate from the server. **However, in an alternate embodiment**, the client would request the optimum coding bit rate it identified, and **the server would perform the analysis to determine which supported rate is most appropriate**.

EX1004, ¶0031 (emphasis added). *Chou* also discloses:

> The preceding discussions have assumed that the control process for adapting the stream or its bit rate to the prevailing conditions is located within the client. This is called receiver-driven streaming because the client (i.e., the receiver) makes the decisions and informs the server (i.e., the sender). However, it should be clear that sender-driven streaming is also possible, in which the control process operates at the sending side.

EX1004, ¶0130.

i. [16a] A transmission device configured to be capable of communicating with a reception device, the transmission device comprising:

202. *See* [1a].

ii. [16b] a content transmitting unit for transmitting content data, which is one content coded with any one code rate of a plurality of code rates different from each other, to the reception device,

203. *See* [1b].

iii. [16c] wherein the content transmitting unit is configured to change the code rate of the content data to be transmitted to the reception device to a code rate determined based on a remaining time before reproduction start time set as time at which the reception device starts reproduction of the content from a present moment and based on an available reproduction time, which is a time available for reproducing the content based on the content data stored in the storage device of the reception device.

204. *See* [1d]-[1e].

205. To the extent that Patent Owner argues that this limitation is performed by the transmission device, *Chou* teaches this, as explained above for [1d]. §IX.A.iv.

K. Claim 17

i. [17a] The transmission device according to claim 16, further comprising: [17b] a code rate determining unit means for determining the code rate based on the remaining time and the available reproduction time.

206. *See* [1d].

L. Claim 18

i. [18] The transmission device according to claim 16, wherein the code rate determining unit is configured to determine a value becoming smaller as the available reproduction time becomes shorter than a target available reproduction time, which is a target value of the available reproduction time, and becoming smaller as the remaining time becomes shorter, as the code rate.

207. *See* claim 2.

M. Claim 20

i. [20] The transmission device according to claim 16, wherein the code rate determining unit is configured to determine the code rate with every change period set in advance.

208. *See* claim 4.

N. Claim 21

209. Claim 21 recites substantially the same recitations as [1a]-[1b] and [1d]-[1e], but recites "[a] non-transitory computer-readable storage medium that stores a program comprising instructions" for performing the limitations of the of the distribution system.

210. To the extent that Patent Owner may argue that *Chou* teaches operation by a client/reception device rather than a server/transmitting unit for any of the claim elements of claim 21 and its dependents, this is incorrect. For example, *Chou* teaches that either the client or the server are a code rate determining unit. For example, *Chou* states:

> Given this, the present system and process includes techniques for **determining the most appropriate coding bit rate**, from the available rates, in view of the optimum coding bit rate identified by the client. It is noted that the available rates could be provided to the client from the server in a preamble to the streaming media data. In such a case, **the client itself would perform the analysis** and request the resulting supported coding bit rate from the server. **However, in an alternate embodiment**, the client would request the optimum coding bit rate it identified, and **the server would perform the analysis to determine which supported rate is most appropriate**.

EX1004, ¶0031 (emphasis added). *Chou* reiterates that either the transmission device or the reception device can determine the code rate. For example, *Chou* discloses:

> The preceding discussions have assumed that the control process for adapting the stream or its bit rate to the prevailing conditions is located within the client. This is called receiver-driven streaming because the client (i.e., the receiver) makes the decisions and informs the server (i.e., the sender). However, it should be clear that sender-driven streaming is also possible, in which the control process operates at the sending side.

EX1004, ¶0130.

i. [21a] A non-transitory computer-readable storage medium that stores a program comprising instructions for causing a transmission device configured to be capable of communicating with a reception device

211. *See* [1a]. Additionally, *Chou* further teaches a non-transitory computer-readable storage medium that stores a program comprising instructions for causing a transmission device to perform the limitations of claim 21. EX1004, ¶¶0049-0058. For example, *Chou* discloses that the disclosed process "may be described in the general context of computer-executable instructions, such as program modules, being executed by a computer." EX1004, ¶0050. *See also id.* at ¶¶0051-0055 (describing a computing system and computer readable media storing computer readable instructions for the computer) and Claim 46.

ii. [21b] to realize a content transmitting unit for transmitting content data, which is one content coded with any one code

rate of a plurality of code rates different from each other, to the reception device,

212. *See* [1b].

iii. [21c] wherein the content transmitting unit is configured to change the code rate of the content data to be transmitted to the reception device

213. *See* [1d].

iv. [21d] to a code rate determined based on a remaining time before reproduction start time set as time at which the reception device starts reproduction of the content from a present moment, and based on an available reproduction time, which is a time available for reproducing the content based on the content data stored in the storage device of the reception device.

214. *See* [1c].

O. Claim 22

215. Claim 22 recites substantially the same recitations as claim 1, except claim 22 recites the limitations of claim 1 from the perspective of the reception device of the distribution system. Therefore, *Chou* anticipates and renders obvious the limitations of claim 22. *Supra* §IX.A.

i. [22a] A reception device configured to be capable of communicating with a transmission device, the reception device comprising:

216. *See* [1a].

ii. [22b] a content reproducing unit for, while receiving content data, which is one content coded with any one code rate of a plurality of code rates different from each other and is

transmitted by the transmission device, storing received data of the content data into a storage device and also reproducing the content based on the stored data; and

217. *See* [1b]-[1c].

iii. [22c] a code rate determining unit for determining the code rate based on a remaining time before reproduction start time set as time to start reproduction of the content from a present moment and based on an available reproduction time, which is a time available for reproducing the content based on the content data stored in the storage device,

218. *See* [1d].

iv. [22d] wherein the content reproducing unit is configured to receive content data coded with the determined code rate and start reproduction of the content at the set reproduction start time.

219. *See* [1c], [1e]-[1f].

P. Claim 23

i. [23] The reception device according to claim 22, wherein the code rate determining unit is configured to determine a value becoming smaller as the available reproduction time becomes shorter than a target available reproduction time, which is a target value of the available reproduction time, and becoming smaller as the remaining time becomes shorter, as the code rate.

220. *See* claim 2.

Q. Claim 25

i. [25] The reception device according to claim 22, wherein the code rate determining unit is configured to determine the code rate with every change period set in advance.

221. *See* claim 4.

R. Claim 26

222. Claim 26 is substantially the same as claim 1, reciting the limitations of claim 1 from the perspective of the reception device of the distribution system, except claim 26 recites "[a] non-transitory computer-readable storage medium that stores a program comprising instructions" for performing these limitations. *Chou* discloses such a storage medium. Therefore, *Chou* renders obvious the limitations of claim 26. *Supra* §IX.A.

i. [26a] A non-transitory computer-readable storage medium that stores a program comprising instructions for causing a reception device configured to be capable of communicating with a transmission device to realize:

223. *See* [1a]. *Chou* further teaches a non-transitory computer-readable storage medium that stores a program comprising instructions for causing a transmission device to perform the limitations of claim 21. EX1004, ¶¶0049-0058. For example, *Chou* discloses that the disclosed process "may be described in the general context of computer-executable instructions, such as program modules, being executed by a computer." EX1004, ¶0050. *See also* ¶¶ 0051-0055 (describing a computing system and computer readable media storing computer readable instructions for the computer) and Claim 46.

ii. [26b] a content reproducing unit for, while receiving content data, which is one content coded with any one code rate of a

plurality of code rates different from each other and is transmitted by the transmission device, storing received data of the content data into a storage device and also reproducing the content based on the stored data; and

224. *See* [1b]-[1c].

iii. [26c] a code rate determining unit for determining the code rate based on a remaining time before reproduction start time set as time at which the reception device starts reproduction of the content from a present moment, and based on an available reproduction time, which is a time available for reproducing the content based on the content data stored in the storage device of the reception device,

225. *See* [1d].

iv. [26d] wherein the content reproducing unit is configured to receive content data coded with the determined code rate and start reproduction of the content at the set reproduction start time.

226. *See* [1c], [1e]-[1f].

S. Claim 27

227. Claim 27 is substantially the same as claim 1, except claim 27 recites "a content transmitting means", "a content reproducing means", and "a code rate determining means" and claim 1 recites "a content transmitting unit", "a content reproducing unit", and "a code rate determining unit". Therefore, *Chou* renders obvious the limitations of claim 27. *Supra* §IX.A.

i. [27a] A distribution system, including a transmission device and a reception device configured to be capable of communicating with each other,

228. *See* [1a].

ii. [27b] the transmission device being equipped with a content transmitting means for transmitting content data, which is one content coded with any one code rate of a plurality of code rates different from each other, to the reception device, and

229. *See* [1b].

iii. [27c] the reception device being equipped with a content reproducing means for, while receiving the content data transmitted by the transmission device, storing received data of the content data into a storage device and also reproducing the content based on the stored data,

230. *See* [1c].

iv. [27d] the distribution system, comprising a code rate determining means for determining the code rate based on a remaining time before reproduction start time set as time at which the reception device starts reproduction of the content from a present moment and based on an available reproduction time, which is a time available for reproducing the content based on the content data stored in the storage device of the reception device, wherein:

231. *See* [1d].

v. [27e] the content transmitting means is configured to change the code rate of the content data to be transmitted to the reception device to the determined code rate; and

232. *See* [1e].

vi. [27f] the content reproducing means is configured to start reproduction of the content at the set reproduction start time.

233. *See* [1f].

T. Claim 28

234. Claim 28 is substantially the same as claim 16, reciting limitations of claim 1 from the perspective of the transmission device of the distribution system, except claim 28 recites "a content transmitting means" and claims 1 and 16 recite "a content transmitting unit". Therefore, *Chou* renders obvious the limitations of claim 28. *Supra* §§IX.A, IX.J.

i. [28a] A transmission device configured to be capable of communicating with a reception device, the transmission device comprising:

235. *See* [1a].

ii. [28b] a content transmitting means for transmitting content data, which is one content coded with any one code rate of a plurality of code rates different from each other, to the reception device,

236. *See* [1b].

iii. [28c] wherein the content transmitting means is configured to change the code rate of the content data to be transmitted to the reception device to a code rate determined based on a remaining time before reproduction start time set as time at which the reception device starts reproduction of the content from a present moment and based on an available reproduction time, which is a time available for reproducing the content based on the content data stored in the storage device of the reception device.

237. *See* [1d]-1[e].

238. To the extent that Patent Owner argues that this limitation is performed by the transmission device, *Chou* discloses and teaches this, as explained for limitation [1d]. *Supra* §IX.A.iv.

U. Claim 29

239. Claim 29 is substantially the same as claim 22, reciting limitations of claim 1 from the perspective of the reception device of the distribution system, except claim 29 recites "a content reproducing means" and "a code rate determining means" and claims 1 and 22 recite "a content reproducing unit" and "a code rate determining unit". Therefore, *Chou* anticipates and renders obvious the limitations of claim 22. *Supra* §§IX.A, IX.O.

i. [29a] A reception device configured to be capable of communicating with a transmission device, the reception device comprising:

240. *See* [1a].

ii. [29b] a content reproducing means for, while receiving content data, which is one content coded with any one code rate of a plurality of code rates different from each other and is transmitted by the transmission device, storing received data of the content data into a storage device and also reproducing the content based on the stored data; and

241. *See* [1b]-[1c].

iii. [29c] a code rate determining means for determining the code rate based on a remaining time before reproduction start time set as time to start reproduction of the content from a present moment and based on an available

reproduction time, which is a time available for reproducing the content based on the content data stored in the storage device,

242. *See* [1d].

iv. [29d] wherein the content reproducing means is configured to receive content data coded with the determined code rate and start reproduction of the content at the set reproduction start time.

243. *See* [1c], [1e]-[1f].

X. Ground II – Claims 1, 2, 4, 5, 7, 11, 12, 14-18, 20-23, 25-29 are Rendered Obvious by *Chou* in View of *Wang*.

244. In my opinion, claims 1, 2, 4, 5, 7, 11, 12, 14-18, 20-23, 25-29 of the '101 patent are rendered obvious by *Chou* in view of *Wang*. In the discussion of claims 1, 2, 4, 5, 7, 11, 12, 14-18, 20-23, 25-29 that follows, I explain the correspondence between the disclosure of *Chou* in view of *Wang* and each limitation of claims 1, 2, 4, 5, 7, 11, 12, 14-18, 20-23, 25-29.

A. Claim 1

i. [1a] A distribution system, including a transmission device and a reception device configured to be capable of communicating with each other,

245. *See* [1a] of Ground I.

ii. [1b] the transmission device being equipped with a content transmitting unit for transmitting content data, which is one content coded with any one code rate of a plurality of code rates different from each other, to the reception device, and

246. *See* [1b] of Ground I.

iii. [1c] the reception device being equipped with a content reproducing unit for, while receiving the content data transmitted by the transmission device, storing received data of the content data into a storage device and also reproducing the content based on the stored data,

247. *See* [1c] of Ground I.

iv. [1d] the distribution system, comprising a code rate determining unit for determining the code rate based on a remaining time before reproduction start time set as time at which the reception device starts reproduction of the content from a present moment and based on an available reproduction time, which is a time available for reproducing the content based on the content data stored in the storage device of the reception device, wherein:

248. *See* [1d] of Ground I.

249. *Wang* further discloses the distribution system (multimedia streaming system 10) comprising a code rate determining unit (session QoS manager 22) for determining the code rate based on a remaining time before reproduction start time set as time at which the reception device (receiver 50) starts reproduction of the content from a present moment and based on an available reproduction time which is a time available for reproducing the content based on the content data stored in the storage device (receiver buffer 54) of the reception device 50.

250. More specifically, *Wang* discloses that the sender 20 uses the information provided from the receiver 50 "to adjust the transmission rate and/or nominal playout rate of the different media to maintain the receive buffer fullness

level and/or perform 'clock drift correction.'" EX1016, 7:13-18. The different media QoS managers 24[8] of the sender can provide different rate adaptions for the different media types. EX1016, 7:18-20.

251. The remaining playout duration in time is provided in the form of an identity of a selected one of the sequence of packets to be played out and a time difference between the current time and a scheduled playout time (i.e., reproduction start time) of the selected packet (i.e., remaining time). EX1016, 3:33-36, Abstract, claim 1. Specifically, *Wang* teaches that "[a]t any time, it is assumed that the receiver buffer contains a plurality of RTP packets received from the sender." EX1016, 5:8-9. "Each RTP packet has a sequence number and playout timestamp known to the sender, thus it is possible for the sender to know the playout time of any sequence number RTP packet relative to another sequence number RTP packet. Thus, if the sender has timing information indicative of the scheduled playout time of any RTP packet stored in the receiver buffer, the sender can calculate the scheduled playout time of any other RTP packet." EX1016, 5:12-19. The sender obtains this information from the receiver, which can provide to the sender "a sequence number of a selected packet (SN_x) and timing information indicative of

[8] Column 7 line 19 of *Wang* identifies the different media QoS managers with reference numeral 22 but this appears to be an inadvertent error as the different media QoS managers have previously been identified with reference numeral 24.

time until the selected packet passed to the decoder (T_x)," where T_x indicates "the time difference between the current time and the scheduled playout time of packet x." EX1016, 5:35-37, 6:39-44. In other words, the receiver provides the server the difference in time between current time and a scheduled playout time (i.e., reproduction start time) of the selected packet (i.e., remaining time)

252. Using the timing information, "the sender calculates the amount of time it would take for the receiver buffer to empty if the receiver continues to playout at normal speed" (i.e., the available reproduction time). EX1016, Abstract, 3:44-47 ("computing in the server the fullness level in the receiver buffer based on the provided information and the sequence number or the timestamp of the last packet to be played out"). Specifically, *Wang* teaches that "T_{last} is equivalent to the current actual receiver buffer fullness level," ("represented as remaining playout duration in time") which can be calculated based on the values of "SN_x and T_x" obtained from the receiver. EX1016, 5:20-24, 5:35-37, 5:57-59.

253. "This receiver buffer fullness level information can be used at the sender to adjust the transmission rate and/or nominal playout rate of the RTP packets in order to maintain a targeted receiver buffer fullness level." EX1016, Abstract. "For example, the server can change the transmission characteristic by bitstream switching, transmission rate decoupling where the transmission rate is different from the designated rate in order to increase or decrease the receiver buffer level. The

server can also modify the playout rate of the bitstream so as to influence the receiver buffer fullness level." EX1016, 6:31-37. Accordingly, *Wang* teaches changing any of a number of transmission characteristics, including the code rate, based on the receiver buffer fullness level (available reproduction time), and based on the sequence number of a selected RTP packet in the receiver buffer and the time difference between the scheduled playout time of this packet and the current time (remaining time before reproduction start time). These transmission characteristics include changing the code rate.

254. Thus, *Wang* teaches calculating a change in code rate based on the receiver buffer fullness level (available reproduction time), and based on the sequence number of a selected RTP packet in the receiver buffer and the time difference between the scheduled playout time of this packet and the current time (remaining time before reproduction start time). That is, *Wang* teaches calculating a change in code rate based on both the remaining time before reproduction start time and an available reproduction time.

255. More specifically, using an "RTCP RBI" packet (Real-time Control Protocol Receiver Buffer Information packet) that is sent together with a prior art "RTCP RR" report packet as a compound packet, the client is able to provide to the server, a message including information indicative of the remaining playout duration in time in the receiver buffer at a time instant, so as to allow the server to adjust the

transmission characteristic based on the provided information. EX1016, 6:25-31. ("For example, the server can change the transmission characteristic by bitstream switching, transmission rate decoupling where the transmission rate is different from the designated rate in order to increase or decrease the receiver buffer level." EX1016, 6:31-35. "The server can also modify the playout rate of the bitstream so as to influence the receiver buffer fullness level." EX1016, 6:35-37.) "The remaining playout duration in time in the receiver buffer can be computed from a sequence number of a selected packet (SNx) and timing information indicative of time until the selected packet passed to the decoder (Tx)." EX1016, 6:39-43.

256. Accordingly, the QoS manager 22 determines the rate based on the remaining time before reproduction start time (i.e., the time difference between a scheduled playout time and the current time) and an available reproduction time (i.e., remaining playout duration in time).

257. Additionally, these teachings of *Wang* can also be applied in the situation where the initial playback of content (i.e., the start of the content being played back) has yet to begin (i.e., content is being transmitted and received into the buffer, but no playback has occurred). *Wang* teaches that information can be provided that indicates "T_{first}", which corresponds to "the time difference between the current time and the scheduled playout time of" the first packet in the buffer. EX1016, 5:32-44. This discloses [1d]'s required "remaining time before

reproduction start time set as time at which the reception device starts reproduction of the content from a present moment." Further, *Wang* teaches that based on this information, "the current actual receiver buffer fullness level" can be calculated (EX1016, 5:35-44) – i.e., [1d]'s required available reproduction time. As an example, assume a situation where packets are transmitted at one packet per second and that five packets, each constituting one second of playback time, have been transmitted to, and stored in, the buffer of the reception device. Further, assume that playback is set to begin when eight packets are received in the buffer. In this example, *Wang's* T_{first} indicates the amount of time that will elapse between a current time and when the first packet in the buffer gets played back, which is three seconds (i.e., the amount of time it takes for the buffer to get from being five packets full to eight packets full, which is three seconds at a one-packet-per-second transmission rate). Based on this, *Wang* teaches that "the current actual receiver buffer fullness level" can be calculated, which would be calculated to be five seconds (i.e., five packets in the buffer at one second of playback time each). Thus, *Wang* also teaches the requirements of [1d] in the situation where playback has yet to begin.

v. [1e] the content transmitting unit is configured to change the code rate of the content data to be transmitted to the reception device to the determined code rate; and

258. *See* [1e] of Ground I.

vi. [1f] the content reproducing unit is configured to start reproduction of the content at the set reproduction start time.

259. *See* [1f] of Ground I.

B. Claims 2, 4, 5, 7, 11, 12, 14-18, 20-23, 25-29

260. Claims 2, 4, 5, 7, 11, 12, 14-18, 20-23, 25-29 are taught and disclosed by *Chou* in view of *Wang* for the same reasons set forth in Ground 1. *Supra* §IX.

XI. Ground III – Claims 5, 7, and 15 are Obvious under 35 U.S.C. § 103 Based on *Chou* in View of *Nobuyoshi*

261. In my opinion, POSITA would have found claim 5 of the '101 patent to have been obvious based on *Chou* in view of *Nobuyoshi*.

262. In the discussion of claim 5 below, I explain the correspondence between *Chou* and *Nobuyoshi* and each recitation of these claims.

A. Claim 5

i. [5] The distribution system according to claim 1, further including a plurality of the reception devices, the distribution system further comprising a synchronous reproduction controlling unit for matching reproduction positions of the content to be reproduced by the plurality of the reception devices, respectively, with each other among the plurality of the reception devices.

263. *Chou* and *Nobuyoshi* (Patent Document 2)—Japanese Unexamined Patent Application Publication No. 2007-13705, original and certified English translations included as Exhibits 1009 and 1014—teach claim 5, rendering it obvious.

264. *Chou* teaches the distribution system of claim 1. Supra §IX.A. Nobuyoshi teaches a distribution system including a plurality of reception devices (player/mobile terminals). Nobuyoshi teaches "that different Mobile terminals may participate in simultaneous playback between multiple Mobile terminals" of "AV content" that "the transmission terminal" transmits "to each mobile terminal." EX1014, ¶¶0003-0004.

265. *Nobuyoshi* also teaches a synchronous reproduction controlling unit for matching (simultaneous playback) reproduction positions (playback start time) of the content to be reproduced by the plurality of reception devices (player/mobile terminals), respectively, with each other among the plurality of the reception devices. *Nobuyoshi* discloses an "information processing device…acquiring the playback elapsed time information indicating the elapsed time since the start of playback of content data from each player terminal or transmitter terminal" and "a playback start time determination means for determining a playback start time of content data based on elapsed time information according to a delay time required for data communication with a transmitter terminal." EX1014, ¶¶0011. Thus, "content data from the start time of playback supplied by the transitter terminal can be played simultaneously from the middle of the same content data as that of the player terminal being played simultaneously by the information processing device by playing the content data from the start time of playback supplied by the transitter

terminal while each player terminal is playing the content data simultaneously." EX1014, ¶¶0012.

B. Claim 7

i. [7] The distribution system according to claim 5, wherein the content transmitting unit is configured to, when second reproduction start time, which is reproduction start time set for a second reception device as one of the plurality of the reception devices, is later than first reproduction start time, which is reproduction start time set for a first reception device as another one of the plurality of the reception devices, estimate a reproduction position of the content being reproduced by the first reception device at the second reproduction start time and transmit a portion of the content data at and after the estimated reproduction position to the second reception device.

266. *Chou* in view of *Nobuyoshi* teach claim 7, rendering it obvious.

267. *Chou* teaches the distribution system of claim 1. *Supra* §IX.A. *Nobuyoshi* teaches a system including a PDA, a mobile phone, and a digital camera (any of which being the first reception device) as well as a notebook PC (the second reception device). EX1014, ¶0020-0021. *Nobuyoshi* teaches that the PDA, mobile phone, and digital camera can start playing content simultaneously (reproduction start time for a first reception device). EX1014, ¶0025-0026, 0028 (explaining the playback starts at the same time for the PDA, mobile phone, and digital camera).

268. Further, *Nobuyoshi* teaches that while the other devices are "playing moving image content simultaneously," the notebook PC can participate and "start[]

simultaneous playback processing from the midway of the moving image content." EX1014, ¶0027. That is, the reproduction start time for the notebook PC (second reception device) is necessarily later than the reproduction start time of the PDA, mobile phone, and digital camera, which were already playing the moving image content—i.e., the second reproduction start time is later than the first reproduction start time. For the notebook PC to accomplish its simultaneous playback from the midpoint, information is transmitted to the notebook PC indicating "the master clock information" of the content being played, which allows the notebook PC to "correct[] its clock with master clock information and synchronize[] it," allowing the notebook PC to synchronize its clock to the master clock so that it can "match the playback timing of the moving image content" at the other player terminals (PDA, etc.). EX1014, ¶0029-0032. Thus, *Nobuyoshi* discloses estimating the reproduction position of the content being reproduced at the first reception device at the second reproduction start time and transmit the content after that time to the second reproduction device.

C. Claim 15

i. [15a] The distribution method according to claim 11, applied to the distribution system including a plurality of the reception devices, the distribution method further comprising: [15b] matching reproduction positions of the content to be reproduced by the plurality of the reception devices, respectively, with each other among the plurality of the reception devices.

269. *See* claim 5.

XII. Motivation to Combine for Grounds II-III

270. The motivation-to-combine inquiry asks "whether a skilled artisan would have been motivated to combine the teachings of the prior art references to achieve the claimed invention." *Allied Erecting & Dismantling Co. v. Genesis Attachments, LLC*, 825 F.3d 1373, 1381 (Fed. Cir. 2016) (internal quotation marks omitted); *see also Pfizer, Inc. v. Apotex, Inc.*, 480 F.3d 1348, 1361 (Fed. Cir. 2007). "The inquiry is not whether a relevant artisan would combine a first reference's feature with a second reference's feature to meet requirements of the first reference that are not requirements of the claims at issue." *Axonics, Inc. v. Medtronic, Inc.*, No. 2022-1451, 2023 WL 4410686, at *5 (Fed. Cir. July 10, 2023). "[T]he real question is why a person of ordinary skill in the art would have combined elements from specific references *in the way the claimed invention does.*" *Id.* (emphasis in original).

A. Motivation to Combine for Ground II

i. *Chou*, *Wang*, and the '101 patent all manage buffer duration/fullness (based on time) in order to prevent buffer underflow

271. *Chou* discloses "a system and process for controlling a coding bit rate of streaming media data being transmitted to a client from a server over a computer network." EX1004, ¶0019. "[T]his coding bit rate control involves dynamically

adjusting the coding bit rate of the streaming media data to control the client buffer duration." EX1004, ¶0019. "The purpose of this is to prevent the client buffer from underflowing…meets two of the aforementioned user expectations. Namely, if the buffer never underflows, it allows for continuous playback. In addition, keeping the average coding bit rate close to the average transmission bit rate of the network means the data is played back with the highest possible quality given the average communication bandwidth available." EX1004, ¶¶0019-0020.

272. *Wang* similarly "relates generally to multimedia streaming and, more particularly, to receiver buffer fullness management of the multimedia streaming client." EX1016, 1:8-10. Also like *Chou*, *Wang* discloses that the purpose for managing receiver buffer fullness is "to avoid buffer underflow (i.e. playout interruption)." EX1016, 1:21-27. That is, both *Chou* and *Wang* teach and disclose a system that controls the client's buffer duration/fullness in order to prevent underflow. This is directly related to the claims of the '101 patent, which recite adjusting the code rate in order to control the client's buffer.

273. Finally, *Chou*, *Wang*, and the '101 patent all view buffer duration/fullness in terms of time. For example, *Chou*, discloses that "[t]he size of the client buffer can be expressed as the number of seconds of content in the buffer, called the buffer duration." EX1004, ¶0007. *Wang* similarly discloses that "the sender calculates the *amount of time* it would take for the receiver buffer to empty if

the receiver continues to playout at normal speed and no further RTP packets arrive to the receiver buffer." EX1016, Abstract (emphasis added). The '101 patent specifically requires the use of time in the claims (i.e., "remaining *time* before reproduction start time" and "*time* available for reproducing the content").

ii. *Chou* and *Wang* both measure similar buffer characteristics to the '101 patent

274. *Chou* discloses controlling the code rate (as a means to prevent buffer underflow) based on arrival time of a frame so that "[i]n regard to the target arrival time for each frame, these are chosen so as to make the amount of time between the target time of a frame and its playback time large enough, after the startup period, that network jitter, delays and throughput changes which may cause the actual arrival time of the frame to be after its target arrival time do not result in the frame arriving after its scheduled playback time." EX1004, ¶0027. In other words, *Chou* chooses the most appropriate code rate in order to ensure that a frame's arrival time is such that "the amount of time between the target time of a frame and its playback time" is large enough to handle variations in the network. Further, *Chou* discloses "dynamically adjusting the coding bit rate of the streaming media data to control the buffer duration," which is "[t]he size of the client buffer… expressed as the number of seconds of content in the buffer." EX1004, ¶¶0007, 0019-0026, 0029-0032. Thus, two factors *Chou* utilizes in determining whether to adjust the code rate to

prevent underflow are (1) the time difference between a present moment and the frame's scheduled playout time, and (2) the number of seconds of data available on the buffer.

275. *Wang* similarly discloses controlling code rate (as a means to prevent buffer underflow) based on "the sequence number of any RTP packet in the receiver buffer and the time difference between the scheduled playout time of this packet and the current time." EX1016, 2:53-57. Further, *Wang* discloses providing "the actual receiver buffer fullness level in a receiver of [] RTP packets at a certain time instant represented as the remaining playout duration in time," which reflects "the amount of time it would take for the receiver buffer to deplete if no new RTP packets are added to the buffer." EX1016, 2:50-66. Thus, similar to *Chou*, two factors *Wang* utilizes in determining whether to adjust the transmission rate to prevent underflow are (1) the time difference between a frame and its scheduled playout time, and (2) the amount of time available on the buffer to be played back.

276. The two buffer characteristics measured by *Chou* and *Wang* are directly related to the claims of the '101 patent, which determine code rate based on (1) the "remaining time before… [a] time at which the reception device starts reproduction of the content from a present moment" and (2) "a time available for reproducing the content based on the content data stored in the storage device" (i.e., buffer).

iii. *Chou* and *Wang* both disclose controlling code rate as a means to control buffer duration/fullness to prevent buffer underflow

277. *Chou* is primarily focused on managing buffer duration by controlling the code rate (which *Chou* describes as "the average number of bits needed to encode one second of content") of the content being transmitted over the network. EX1004, ¶0007. However, *Chou* also recognizes that "the buffer duration can be increased by increasing r_a, decreasing r_c, and/or decreasing v (and vice versa for decreasing the buffer duration)," where r_a "is the arrival rate, or average number of bits that arrive at the client per second of real time," r_c is the code rate, and v is the playback rate. EX1004, ¶0007. *Wang* manages buffer duration by controlling the transmission characteristics of content over the network (EX1016, Abstract), such as bitstream switching.

iv. A POSITA would have been motivated to combine *Chou* and *Wang*

278. *Wang* teaches a system that provides additional precision in the timing information utilized to determine buffer fullness by the use of feedback information provided specifically from the receiver. EX1016, Abstract, 1:64-2:16, 2:50-3:9. This would further advance *Chou's* objective to safely maximize the available channel bandwidth to provide optimum quality in the received content data. EX1004, Abstract ("Using the theory of optimal linear quadratic control, the client

buffer duration is kept as close as possible to a target level while still keeping the coding bit rate (and hence the quality) as constant as possible."), ¶¶0019-21.

279. Further, I understand that the Supreme Court has stated that "[t]he combination of familiar elements according to known methods is likely to be obvious when it does no more than yield predictable results." *KSR Int'l Co. v. Teleflex Inc.*, 550 U.S. 398, 416 (2007). Here, the combination of *Chou* and *Wang* are a combination of familiar elements utilizing familiar concepts. Both *Chou* and *Wang* disclose the familiar components of a streaming system, such as a transmission device and reception device that includes a buffer for storing content. Both *Chou* and *Wang* also address the familiar concept of managing a reception device's buffer duration by controlling transmission characteristics (in this case, coding bit rate). Thus, the combination of *Chou* and *Wang* is a combination of familiar elements according to known methods to yield predictable results.

280. I also understand the Supreme Court has explained that "if a technique has been used to improve one device, and a person of ordinary skill in the art would recognize that it would improve similar devices in the same way, using the technique is obvious." *KSR*, 550 U.S. at 417. This would also apply to the combination of *Chou* and *Wang*. For example, *Wang* improves its ability to accurately control buffer characteristics of a reception device by more accurately determining (1) the time difference between a present moment and the frame's scheduled playout time, and

(2) the amount of time available on the buffer to be played back. This is then used in *Wang* to determine whether, and by how much, a coding bit rate should be changed such that a desired buffer fullness can be maintained. Because *Chou* also discloses a desire to maintain a reception device's desired buffer fullness by controlling a coding bit rate, a POSITA would have recognized that the techniques used to improve the devices and concepts disclosed in *Wang* could also be used to improve the similar devices and concepts disclosed in *Chou*, making the use of that technique obvious.

281. I understand that a motivation to combine does not require that a literal modification of an existing system design according to a primary reference be effected by adding or changing the existing components according to a secondary reference. Rather, A POSITA would know how to take pertinent portions of the primary design and combine them with pertinent portions of a secondary design and fit them together "like the pieces off a jigsaw puzzle."

282. Therefore, a POSA would have been motivated to combine the teachings in *Chou* with the teachings in *Wang*. Specifically, a POSA would have been motivated to use the buffer characteristic measurements disclosed in *Wang* as a basis for *Chou* to determine whether, and how much of, a code rate change is required.

B. Motivation to Combine for Ground III

283. The prior art and the '101 patent contains ample teachings to motivate a POSITA to revise the operation of *Chou* to perform the synchronous reproduction across a plurality of devices as taught by *Nobuyoshi*.

284. First, the '101 patent admits that "[t]here is a known distribution system that includes a transmission device and a plurality of reception devices configured to be capable of communicating with each other and allows the plurality of reception devices to synchronously reproduce content." EX1001 at 1:11-15. My understanding is that according to controlling USPTO guidance, admissions such as this in the challenged patent "can be used, for example, to…support a motivation to combine particular disclosures [or] demonstrate the knowledge of the ordinary-skilled artisan at the time of the invention." *See* June 9, 2022 USPTO's Updated Guidance On The Treatment Of Statements Of The Applicant In The Challenged Patent In Inter Partes Reviews Under § 311 ("AAPA Guidance"), at 4. A POSITA would have been motivated to modify *Chou's* techniques of "controlling the coding bit rate of streaming media" (EX1004, ¶0002) with the teachings of *Nobuyoshi* that disclose the streaming of media to a plurality of reception devices at least because, as the '101 patent admits, a POSITA would have known of a media streaming system that includes a plurality of reception devices.

285. Second, *Chou* itself explains that its teachings are "operational with numerous other general purpose or special purpose computing system environments or configurations" including "distributed computing environments where tasks are performed by remote processing devices that are linked through a communications network." EX1004, ¶¶0049-0050. Further, *Chou* specifically states that its system "may operate in a networked environment using logical connections to one or more remote computers." EX1004, ¶0056. A POSITA would have been motivated, based on *Chou's* disclosure that its system can be utilized in a distributed computing environment that has one or more remote computers, to apply *Nobuyoshi's* teaching of plurality of reception devices, to accomplish *Chou's* disclosure that its system can be utilized in a distributed computing environment that has one or more remote computers.

286. Moreover, because the '101 patent admits that systems with a plurality of reception devices are known and because *Chou* specifically discloses using its system with a plurality of reception devices, *Chou's* teachings can be used cooperatively with the teachings of *Nobuyoshi* regarding systems with a plurality of reception devices. This provides an expectation of success to a POSITA. Thus, a POSITA would have recognized that the teachings of these references fit neatly with each other to control the coding bit rate of streaming media in a system with multiple reception devices.

Attachment A

Cliff Reader, Ph.D.

Expertise

- Real-time Processing and Display
- Video compression (MPEG-HEVC)
- Imaging/Video Systems Architecture
- Imaging/Video Chip Architecture
- Video Compression Algorithms
- Consumer audio/video
- Reconnaissance Imaging
- Medical Imaging

Professional Summary

Dr. Reader has over forty five years of work experience in digital imaging and digital video & audio. In the 1970's and early 1980's, he was one of the leaders in the digital imaging field, performing extensive work in areas of compression, real-time processing, real-time display, image enhancement, and others. Applications included reconnaissance imaging, medical imaging, earth resources management and videoconferencing. This work anticipated much of the technology being used in contemporary consumer digital video systems. He has in-depth experience of the commercial history and when key parts of technology were first developed and published.

Dr. Reader's career includes technical work in areas of algorithm design, system design, and semiconductor chip design and business development, marketing and sales work in areas of market analysis, product roadmap development and direct sales.

Dr. Reader has held many leadership roles in standards development: US Head of Delegation to MPEG (1991-1993); chief editor of the MPEG1 standard (1991-1993); instigator of the successful effort to make MPEG2 the market standard for digital TV over proprietary competitors in the US and national competitors in Europe and Japan (1992); MPEG4 Subcommittee Chairman (1993-1996); AVS (China) Subgroup Chairman (2003-Present). He is an expert in all major audio-video standards. MPEG audio (Layer I, II, mp3, AAC), Dolby AC3, MPEG video (1, 2, 4), H.264, Windows Media 9 (VC-1), H.265 (HEVC), AVS and AV1. He is also an expert in DVD standards, including formatting, navigation and authoring.

Dr. Reader has extensive experience in patent licensing and patent pools. He was the technical expert for developing the initial list of potentially essential patents for the first MPEGLA patent pool. He is the Co-Director leading the pool formation and license negotiations for the AVS patent pools. Dr. Reader has experience in the valuation of patents and the acquisition and sale of patent portfolios.

Dr. Reader has authored over twenty technical papers, two book chapters and two patents in digital video processing, display, and compression. He is an Adjunct Professor at Peking University, Beijing, China.

PELOTON EX. 1037

Employment History

From: 2001 **Independent Consultant**
To: Present Escondido, CA

Provide technical and marketing consulting services in the areas of digital imaging and digital video including:

- consumer video
- real-time processing and display
- image and video & audio compression (specializing in standards)
- imaging/video systems architecture
- imaging/video chip architecture
- audio/video transmission, including optical & wireless networks

Over 80 clients including Apple, AT&T, Adobe, Broadcom, China Central TV, Chinese Academy of Sciences, Cisco, Comcast, DirecTV, Dish Network, EchoStar, ETRI, Facebook, Fujifilm, Gateway, GE, Google, Haier, Hisense, HP, Hulu, IBM, Johnson Controls, KAIST, Lenovo, LG, Matsushita, MediaTek, Microsoft, Motorola, Netflix, Nikon, Nokia, ON2, OPPO, Philips, Quanta, Riverbed, Samsung, Sharp, Siemens, Sony, Sun Microsystems, Toshiba, TPV, Tyco, US Department of Justice, Verizon, Vimeo, Vizio, Wistron, Xiaomi, Yahoo, Zoran and ZTE.

<u>Personal database of patent analysis:</u>
-Evaluation of all the US patents in the MPEG2, H.264 and H.265 patent pools.
-Evaluation of the US patents and published applications underlying the H.264 and H.265 standards.
-Personal archive of over 2000 audiovisual patents.

<u>Personal database of audio and video prior art.</u>
-Virtually complete collection of all contributions to the H.26x and MPEGx families of standards from 1985 to today.
-Many hundreds of technical journal and conference articles documenting the first invention of key technologies.
-Work-in-progress book on the history of video compression.
-Historical collection of technical data from the earliest digital video, image processing and real-time image display systems in the 1970s and 1980s.

From: 1999 **nDSP Corporation**
To: 2001 Campbell, CA
Title: *Vice President of Marketing and Acting Vice President of Sales*

Responsible for marketing and sales in a startup company providing high-quality video signal processors to TV manufacturers.
Developed product specifications and roadmap. Built and managed

sales and marketing team of 6 direct and contractor staff in the US and Japan to provide technical sales, sales support, application engineering, Marcomm and PR. Established distribution in China, Japan and throughout the Far East. Secured first sales as company moved into production phase with design wins in China, Japan and Europe. Initiated and secured major design wins in emerging Progressive DVD business, with production volumes beginning in 4Q00 at an annualized rate of $3.5M. Established strategic partnership with Pixelworks in LCD chip business. Pixelworks acquired nDSP in 2001.

From: 1997 **CagEnt Technologies, Inc. (wholly owned by Samsung)**
To: 1998 Santa Clara, CA
Position: *Vice President of Sales, Digital Video Products*
Responsible for a line of PC-based real-time MPEG2 and Dolby Digital encoders. Established distribution agreements for third-party DVD authoring software. Secured OEM contracts for the products. Built the sales channel worldwide. Built sales to break-even point in 9 months leading to sale of the product line.

From: 1993 **Samsung Semiconductor, Inc.**
To: 1997 San Jose, CA
Position: *Director of Marketing, Digital Media Products;*
Acting Director of Software Engineering
Developed business plans for digital audiovisual semiconductor chips. Managed team of over 50 software engineers in US and Korea for development of a media processor. Established strategic partnerships with Microsoft and IBM for media processor

From: 1990 **Cypress Semiconductor, Inc.**
To: 1993 San Jose, CA
Position: *Business Development Manager*
Founding member of new business unit chartered to develop a "video DSP". Jointly developed a complete business plan, and personally initiated and developed relationships with Philips, Sun Microsystems, Apple Computers and IBM. Chief architect for this early media DSP design, capable of complete MPEG1 decode in real time. (Fully validated by cycle-accurate simulation). Managed R&D team of 10 hardware and software engineers.

Head of US Delegation to MPEG, 1991 to 1992. Chief Editor of the MPEG1 standard. Technical Expert for establishing the MPEGLA Patent Licensing Pool.

From: 1988 **Sun Microsystems, Inc.**

To:	1990	Mountain View, CA
	Position:	*Program Manager*
		Developed requirements and specifications for real-time imaging system. Managed a team of 20 engineers to develop the architecture and high-level design. Interfaced with two key customers – Philips Medical Systems and Lockheed. Developed design for single-board real-time medical and reconnaissance image display.
From:	1981	**International Imaging Systems, Zoran, Virtual Imaging**
To:	1988	Design and development of real-time image processing and display systems. Details available on request.
From:	1975	**Ford Aerospace & ESL (A Division of TRW)**
To:	1981	Details available on request.

Consulting History

Date	2022	**Samsung**
To:	Present	
	Duties:	Testifying Expert in Jawbone matter
Date	2022	**Asus, Lenovo, MSI**
To:	Present	
	Duties:	Consulting Expert in VideoLabs matter
Date	2022	**Google**
To:	Present	
	Duties:	Consulting Expert in Jawbone matter
Date	2022	**Starz**
To:	Present	
	Duties:	Consulting Expert in VideoLabs matter
Date	2022	**Meta Platforms (Facebook)**
To:	Present	
	Duties:	Consulting Expert in VideShare matter
Date	2022	**Oppo**
To:	Present	
	Duties:	Consulting Expert in InterDigital matter
Date	2022	**Apple**
To:	Present	

Duties: Consulting Expert in Jawbone matter

Date 2021 **Verkada**
To: 2022
Duties: Testifying Expert in Motorola Solutions matter

Date 2021 **Facebook**
To: 2022
Duties: Consulting Expert in EyesMatch matter

Date 2021 **Videoconferencing company**
To: Present
Duties: Testifying Expert

Date 2021 **Canon**
To: Present
Duties: Consulting Expert in WSOU Investments/Brazos Licensing matter.

Date 2021 **Axis**
Duties: Consulting Expert

Date 2021 **nVIDIA**
To: Present
Duties: Consultant

Date 2020 **Xiaomi**
To: 2021
Duties: Consulting Expert in InterDigital matter

Date 2020 **LG**
To: 2021
Duties: Consulting Expert DivX matter

Date 2020 **Vizio**
To: Present
Duties: Consulting Expert VDPP matter

Date 2020 **Netflix**
To: Present
Duties: Consultant

Date 2020 **Oppo**
To: Present
Duties: Consultant

Date 2020 **IdeaHub**

To: Present
Duties: Preparation of declaration for Inter Partes Review proceedings. (Unified Patents matter)

Date 2019 **Google**
To: 2021
Duties: Preparation of declarations for Inter Partes Review proceedings (PMC matter)

Date 2019 **Google**
To: 2021
Duties: Consulting Expert (Multiple projects)

Date 2019 **LG**
To: 2020
Duties: Preparation of declarations for Inter Partes Review proceedings. (Uniloc matter)

Date 2019 **Klarquist, Sparkman**
To: 2021
Duties: Consulting Expert (Multiple projects)

Date 2019 **Netflix, Hulu**
To: 2021
Duties: Preparation of declarations for Inter Partes Review proceedings. (DivX matter)

Date 2019 **MediaTek**
Duties: Consulting Expert in American Patents matter

Date 2019 **AT&T**
Duties: Consulting Expert

Date 2019 **KAIST/KBS**
To: 2021
Duties: Consulting Expert for Inter Partes Review proceedings. (Unified Patents matter)

Date 2019 **Vimeo**
To: 2020
Duties: Preparation of declarations for Inter Partes Review proceedings. (BT matter)

Date 2019 **Apple**
Duties: Preparation of declarations for Inter Partes Review proceedings. (Red.com matter)

Date To:	2019 2021	**Adobe**
	Duties:	Preparation of declarations for Inter Partes Review proceedings and consulting expert. (Realtime matter)
Date To:	2018 2019	**Toshiba**
	Duties:	Testifying expert concerning valuation of essential patents for ATSC standards
Date	2018	**Hisense**
	Duties:	Analysis of essential patents for AAC standards
Date To:	2018 2019	**Leading smartphone company**
	Duties:	Analysis of essential patents for the H.265 standard
Date	2018	**Cisco**
	Duties:	Consulting expert in Realtime matter
Date To:	2017 2020	**HEVC Advance**
	Duties:	Consulting expert for HEVC essential patent analysis
Date To:	2017 Present	**Dish Network**
	Duties:	Testifying expert in ClearPlay matter
Date	2017	**Apple**
	Duties:	Preparation of declarations for Inter Partes Review proceedings. (Uniloc matter)
Date To:	2017 2019	**Dish Network**
	Duties:	Testifying expert in Realtime matter
Date To:	2017 2019	**CustomPlay**
	Duties:	Preparation of declarations for summary judgment, claim construction and Inter Partes Review in Amazon case.
Date	2017	**Vizio, Funai, LG, MediaTek, MStar**
	Duties:	Testifying expert in Broadcom case.
Date	2017	**Apple**

	Duties:	Preparation of declarations for Inter Partes Review proceedings. (Nokia matter)
Date	2017	**Vizio**
	Duties:	Preparation of declarations for Inter Partes Review proceeding. (Lightside Technologies matter)
Date	2016	**Dell, Riverbed, EchoStar, Dish Network**
To:	2019	
	Duties:	Testifying expert in Realtime matter
Date	2016	**Sharp, Vizio, ON**
To:	2019	
	Duties:	Testifying expert in WiLan matter
Date	2016	**Avid**
To:	2017	
	Duties:	Testifying expert in Harmonic matter.
Date	2016	**Apple**
	Duties:	Testifying expert in PUMA matter.
Date	2016	**Vizio, TPV**
	Duties:	Testifying expert in PMC matter.
Date	2016	**US Dept. of Justice, Dept. of Homeland Security, DoD, FBI, NSA, & Others**
To:	2020	
	Duties:	Consulting expert in Discovery Patents (3rd Eye Surveillance) matter. Declarations in support of six Inter Partes Reviews. Technology tutorial for Judge.
Date	2015	**ST Micro**
To:	2016	
	Duties:	Consulting expert in Avago matter.
Date	2015	**AT&T**
	Duties:	Consulting expert in Raniere matter.
Date	2015	**Motorola**
To:	2016	
	Duties:	Consulting expert in PUMA matter.
Date	2015	**TPV**
To:	2016	
	Duties:	Consulting expert in Thomson licensing matter.

Date	2015	**Tyco (Exacq, Johnson Controls)**
To:	2018	
	Duties:	Consulting expert in JDS Technologies matter.
Date	2015	**Tyco**
	Duties:	Declaration in support of Inter Partes Review petition in Hawk Technology matter.
Date	2015	**Sceptre**
	Duties:	Expert reports in licensing matter concerning MPEGLA MPEG2 pool patents.
Date	2015	**Samsung**
	Duties:	Consultant and fact witness in case asserting Samsung patents of which I am a named inventor, against NVidia.
Date	2015	**Nissim**
To:	2016	
	Duties:	Consultant expert for patent holder in 20th Century Fox, MGM, and Paramount cases concerning patents related to DVD navigation. Testified at Markman hearings.
Date	2015	**Nikon**
To:	Present	
	Duties:	Consultant.
Date	2015	**Humax**
	Duties:	Search and analysis of prior art.
Date	2015	**Apple**
	Duties:	Analysis of patent portfolio potentially essential for the H.264 standard.
Date	2014	**Haier**
To:	2018	
	Duties:	Analysis of patent portfolios for smart consumer devices.
Date	2014	**Cisco**
To:	2018	
	Duties:	Consultant.
Date	2014	**ZTE, Sony, LG, Samsung, Nokia, GoPro**
To:	2015	
	Duties:	Consulting expert.
Date	2014	**Tyco**

To: 2015
Duties: Expert reports; declaration in support of Inter Partes Review in Trover matter.

Date 2013 **Humax**
Duties: Consultant.

Date 2014 **GE Licensing**
To: 2015
Duties: Consultant.

Date 2014 **Hikvision & Axis**
To: 2015
Duties: Declaration in support of Inter Partes Review. Expert reports in Trover matter.

Date 2014 **Sharp**
To: 2016
Duties: Declaration in support of Inter Partes Review in Wi-Lan matter.

Date 2013 **InterDigital**
To: 2015
Duties: Consulting expert in support of licensing a patent portfolio.

Date 2013 **Apple**
Duties: Consulting expert in National Cheng Kung University matter.

Date 2013 **Acer, ASUS, TPV**
To: 2014
Duties: Testifying expert in Florida Atlantic University matter.

Date 2013 **Toshiba**
To: 2014
Duties: Testifying expert in WiLan matter.

Date 2013 **Grass Valley Group**
Duties: Consulting expert for defense in FastVDO matter.

Date 2013 **TI**
To: Present
Duties: Consultant.

Date 2012 **Vizio**
Duties: Consulting expert in Innovus Prime matter.

Date 2012 **Haier & Shandong Provincial Government**

To: 2014
Duties: Foreign expert advisor for developing and acquiring patent portfolios for innovative consumer products. Development of a patent pool for patents essential to standards for wireless power.

Date 2012 **Vizio**
To: 2014
Duties: Consulting expert in MIT matter.

Date 2012 **Nokia**
To: 2013
Duties: Consulting expert.

Date 2012 **TPV & Vizio**
To: 2013
Duties: Testifying expert for defense in Hitachi matter.

Date 2012 **Samsung**
Duties: Consulting expert in Myport matter.

Date 2012 **Verizon Wireless (Cellco) & T-Mobile**
To: 2013
Duties: Testifying expert for defense in Realtime Data matter.

Date 2011 **Apple**
Duties: Consulting expert in Technicolor matter.

Date 2012 **Microsoft**
To: 2014
Duties: Consulting expert for plaintiff in Motorola matter.

Date 2012 **Apple & LG**
To: 2014
Duties: Testifying expert for defense in MPT matter.

Date 2011 **Sanyo & Olympus**
Duties: Consulting expert for defense in FastVDO matter.

Date 2011 **Apple**
Duties: Consulting expert for defense in FastVDO matter.

Date 2011 **Sony**
Duties: Consulting expert for defense in FastVDO matter.

Date 2011 **Philips**
To: 2014

Duties: Consulting expert for licensing essential patents.

Date 2011 **Apple**
Duties: Consulting expert for defense in MobileMediaIdeas matter.

Date 2011 **Video264Innovations**
Duties: Consulting expert.

Date 2011 **Nikon, Fujifilm & Panasonic**
Duties: Consulting expert for defense in FastVDO matter.

Date 2011 **Haier**
To: 2014
Duties: Consultant for standards, patent pools and patent licensing.

Date 2011 **Susman Godfrey**
Duties: Consultant for patent analysis.

Date 2011 **Vizio**
Duties: Testifying expert for defense in MPT matter.

Date 2011 **TiVo**
Duties: Consulting expert.

Date 2011 **Nikon**
To: 2013
Duties: Consulting expert for defense in MPT matter.

Date 2011 **Broadcom**
Duties: Consulting expert.

Date 2010 **Lionsgate Entertainment**
Duties: Consulting expert in MPEG licensing matter.

Date 2010 **Verizon**
To: 2012
Duties: Testifying expert for defense in ActiveVideo Networks matter.

Date 2010 **Lenovo**
To: 2011
Duties: Consulting expert for defense in licensor matter.

Date 2010 **Sonic, Cyberlink & Joint Defense Team**
Duties: Consulting expert for defense in Mediostream licensor matter.

Date 2010 **Wistron**

To: 2011
Duties: Consulting expert for defense in Toshiba licensor matter.

Date 2010 **Panasonic, Pioneer**
To: 2011
Duties: Consulting expert for defense in VES licensor matter.

Date 2010 **Zoran**
To: 2011
Duties: Technical analysis of patents potentially related to video coding standards.

Date 2010 **Intravisual**
To: 2015
Duties: Consulting expert for patent licensing.

Date 2010 **Motorola**
To: 2010
Duties: Consulting expert for PMC matter.

Date 2009 **Apple**
Duties: Technical analysis of patents potentially related to video coding standards.

Date 2009 **SanDisk**
Duties: Consulting expert re Audio and Video coding patents

Date 2009 **Lenovo**
To: 2011
Duties: Consulting expert for defense in MPEGLA licensor matter.

Date 2009 **Polycom**
To: 2010
Duties: Consulting expert for defense in MPT matter.

Date 2009 **DirecTV**
To: 2011
Duties: Consulting expert for defense in MPT matter.

Date 2009 **EchoStar**
To: 2010
Duties: Consulting expert for defense in MPT matter.

Date 2009 **Vizio**
Duties: Consulting expert for defense in Sony matter.

Date To:	2009 2010	**Vizio**
	Duties:	Consulting expert for defense in LG matter.
Date To:	2009 2010	**Vizio, TPV, Amtran**
	Duties:	Technical report & video presentation to US Customs on design issues related to Funai matter. Testified in ITC hearing, March 2010.
Date To:	2008 2009	**Humax (Korea)**
	Duties:	Audio patent and prior art review.
Date To:	2008 2009	**IC Media (Canada)**
	Duties:	Design of digital signage.
Date To:	2008 Present	**AVS Patent Pool Administration (China)**
	Duties:	Co-Director, leading license negotiations among domestic and multinational licensors. Formation of the AVS1, AVS2 and AVS3 patent pools.
Date	2008	**DirecTV**
	Duties:	Prior art search for DirecTV's appeal against Finisar.
Date	2008	**Pure Digital**
	Duties:	Prior art research and analysis.
Date	2008	**Wragge (UK)**
	Duties:	Prior art review for two video coding patents.
Date	2008	**Microsoft**
	Duties:	Extensive non-infringement analysis for patents asserted by Multimedia Patent Trust (MPT).
Date To:	2008 2010	**iPotential**
	Duties:	Technical analysis of patents potentially related to video coding standards.
Date To:	2008 2009	**Alba (UK) aka Harvard Research**
	Duties:	General education on essential patents, licensing, prior art related to the MPEG2 video standard.

Date	2008	**Philips (Holland)**
	Duties:	Review of patents for essentiality.
Date	2008	**Proview**
	Duties:	Prior art search for TV display features.
Date	2008	**Nissim**
To:	Present	
	Duties:	Consultant expert for plaintiff in Time-Warner case concerning patents related to DVD navigation.
Date	2008	**Comcast**
	Duties:	Technical analysis of MPEG2 systems, DSM-CC, and carousel operation in the cable TV network environment. Contribution to expert's report in Comcast's successful litigation against Finisar.
Date	2007	**Sun Microsystems**
To:	2009	
	Duties:	Chief architect of royalty-free video codec: OMS Video. Extensive supporting patent analysis and technical publication analysis for prior art review.
Date	2008	**SanDisk**
	Duties:	Technical analysis of patents and prior art searching for audio coding.
Date	2008	**Stammberger (Munich)**
	Duties:	Technical analysis of patents potentially related to video coding standards.
Date	2008	**Trigem America Liquidating Trust**
	Duties:	Preparation of expert reports concerning litigation between Toshiba and Trigem.
Date	2007	**Susman-Godfrey**
	Duties:	Technical analysis of patents potentially related to video coding standards.
Date:	2007	**Wong-Cabello**
	Duties:	Technical analysis of patents potentially related to video coding standards.
Date:	2007	**Sisvel**
	Duties:	Technical assistance in licensing audio patents to a third party.
Date:	2007	**Quanta**

Duties: Technical assistance in litigation related to DVD.

Date: 2006 **CCTV (China Central TV)**
Duties: Technical analysis of patents potentially related to MPEG2, H.264, AVS and VC-1 video coding standards and MPEG-AAC and Dolby audio coding standards.

Date: 2006 **MediaTek**
Duties: Technical analysis of MediaTek patents potentially related to video coding standards.

Date: 2006 **Alcatel**
Duties: Technical analysis of Alcatel patents potentially related to video coding standards.

Date: 2006 **Motorola**
Duties: Analysis of technologies contributed to the H.264 standard.

Date: 2005 **Nokia**
Duties: Analysis of technologies contributed to the H.264 standard.

Date: 2005 **Avid**
Duties: Technical analysis of patents potentially related to coding standards.

Date: 2005 **IBM**
Duties: Analysis of technologies contributed to the H.264 standard.

Date: 2005 **HP**
Duties: Analysis of selected audio coding patents.

Date: 2005 **ComVentures**
Duties: Due diligence review of a start-up company in the video semiconductor business.

Date: 2005 **nVidia**
Duties: Prior art search for a set of third-party patents.

Date: 2004 **Microsoft**
Duties:
- Working with a major financial services company, developed a procurement model for managing licensing costs.
- Assisting development of non-infringement positions for a set of patents. (Not in suit).

From: 2004 **SAGEM (France)**
To: 2005

Duties: Technical analysis of potential infringement by SAGEM of a set of third-party patents.

From: 2004 **Polycom Inc.**
To: 2005
Duties: Technical analysis of Polycom patents potentially related to video coding standards.

From: 2004 **Sony Corp.**
To: 2006
Duties:
- Technical analysis of potential infringement by Sony of a set of third-party patents. The parties settled without litigation.
- Analysis of a third-party patent per Sony's direction.

Date: 2004 **On2 Inc**
Duties: Delivery of the comprehensive set of reports on IPR potentially related to the emerging H.264 standard.

Date: 2004 **Matsushita Avionics**
Duties: Technical analysis of potential infringement of Matsushita patents by a third party.

Date: 2004 **Connex Inc.**
Duties: Teaching the details of key complex algorithms in the H.264 standard.

Date: 2004 **DoCoMo (Japan)**
Duties: Delivery of the comprehensive set of reports on IPR potentially related to the emerging H.264 standard.

From: 2004 **DivX Inc.**
To: 2006
Duties: Analysis of technologies contributed to the H.264 standard

Date: 2004 **Cues, Inc**
Duties: Assisted evaluation of infringement by Cues' products of a patent asserted by a third party. The parties settled without litigation.

From: 2003 **GE Licensing**
To: 2004
Duties: Working with a major financial services company, developed a business, market and financial model for valuation of a portfolio of patents through their expiration.

From: 2003 **Institute of Computing Technology, Chinese Academy of Sciences**
To: Present

Duties:

- Preparation of IPR Report for IPR potentially related to the AVS Video standard. This effort involved review of over 2500 abstracts and over 450 patents.
- IPR Subgroup Chairman of AVS. Formed an IPR Experts group to establish a legal foundation for AVS IPR. This group comprised approximately 20 attorneys and business development managers from eight multinational companies representing the PC, consumer, semiconductor and communication industries. (Broadcom, IBM, Intel, Matsushita, Microsoft, Nokia, Sony, Sun Microsystems). The group drafted a member agreement, bylaws and a formal IPR policy governing licensing commitments, disclosure obligations, and protection of license holder rights. AVS Members approved these documents in September 2004.
- Co-Director of AVS Patent Pool. Lead the drafting and negotiation of patent pool management and licensing agreements leading to establishment of the AVS1 and AVS2 patent pools.
- Adjunct Professor, supervising a graduate student project on deinterlacing algorithm development.

Date: 2003 **Yahoo**
Duties: Prior art search to provide background information per Yahoo's request.

Date: 2002 **Gateway, Inc.**
To: 2007
Duties: Extensive prior art search and assistance with claim construction in a litigation matter with Lucent Technologies.

From: 2002 **Apple Computer**
To: 2007
Duties:

- Technical analysis of Apple patents potentially related to H.264.
- Prior art search for various patents per Apple's request.

Date: 2002 **Siemens (Germany)**
Duties:

- Technical analysis of Siemens patents potentially related to H.264.
- Delivery of the comprehensive set of reports on IPR potentially related to the emerging H.264 standard.

Date: 2002 **JVT Committee (Apple, Cisco, Nokia, Polycom, Sun Microsystems, Tandberg, Teles, Texas Instruments, UBVideo, VideoLocus)**
Duties: Developed a comprehensive set of reports on IPR potentially related to the emerging H.264 standard. The reports included a technical review of legacy and new patents for video coding, and analysis of the patent statements provided by all companies whose contributions were adopted into H.264.

Date 2002 **Intervideo**

	Duties:	Advised on market opportunities in the emerging MPEG4 marketplace.
Date:	2001	**Proskauer Rose LLP**
	Duties:	Provided background support in MPEGLA's (successful) effort to license MPEG2 to the major PC manufacturers.
Date	2001	**Pixonics**
	Duties:	Developed marketing plan and marketing support materials for this incubator-stage company.
Date	2001	**Eltron, (Taiwan)**
	Duties:	Provided overview of the digital video semiconductor market.
Date	1999	**nDSP Corporation**
	Duties:	Drafted the sales and marketing plan for this early-stage company. Joined nDSP full-time.
Date:	1998	**IBM Corp.**
	Duties:	Assisted with participation in the ATSC DASE (datacasting) standard.
Date	1998	**Spruce Technologies**
	Duties:	Assisted with transition of Cagent MPEG encoder product after it was sold to Spruce.
From:	1997	**Samsung Advanced Institute of Technology**
To:	1999	
	Duties:	Supported Samsung researchers in MPEG4 standard development. Led effort to provide error-resilient 3D-mesh coding.
Date	1997	**MPEGLA LLC**
	Duties:	Review of opportunity for an MPEG4 patent pool
From:	1993	**CableLabs**
To:	1994	
	Duties:	Teamed with a patent attorney to develop the initial essential patent list for MPEG2. Reviewed approximately 10,000 abstracts and 1,000 patents for the MPEG2 Video and MPEG2 Systems standards. This effort led to the MPEGLA patent pool.

Litigation Support Experience

Quinn Emanuel Urquhart & Sullivan, LLP, San Francisco, CA

Case Motorola Solutions vs. Verkada, **Investigation No. 337-TA-1281**
Project: Expert report, deposition and trial testimony on invalidity of Motorola patents.
Status: Ongoing.
Filed: August, 2021
Location: United States International Trade Commission, Washington DC

Orrick, Herrington & Sutcliffe, LLP, New York, NY
Case ClearPlay vs. Dish Network & EchoStar Technologies, **Case No .: 2:14-cv-00191**
Project: Expert report and deposition on invalidity of ClearPlay patents.
Status: Ongoing.
Filed: March 13, 2014
Location: United States District Court for the District of Utah

Finnegan, Henderson, Farabow, Garrett & Dunner, LLP,Washington DC
Case MPEGLA vs. Toshiba, **NY State Court, Index No. 162716/2015**
Project: Expert report on essentiality and technical value of ATSC Standardspatents.
Status: Parties settled.
Filed: December 31, 2015
Location: Supreme Court of the State of New York, County of New York

US Dept. of Justice, Washington, DC
Case 3rd Eye Surveillance vs. The United States, **Civil Action 15-501**
Project: Declarations and Technical Tutorial on invalidity and non-infringementof 3rd Eye's patents.
Filed: May 15, 2015
Location: United States Court of Federal Claims

Carey Rodrigues, Miami, FL
Case CustomPlay vs. Amazon, **CASE N. 9:17-cv-80884-KAM.**
Project: Declarations and deposition on infringement of and claim constructionfor CustomPlay's patents.
Status: CustomPlay patents ruled invalid in IPR proceedings.
Filed: July 27, 2017
Location: United States District Court for the Southern District of Florida

Kirkland, JMBM, New York, Los Angeles
Case Wi-Lan vs. Sharp Electronic Corp., Vizio, **Case No. C.A. No. 15-379(LPS) (CJB)**
Project: Expert reports and depositions on non-infringement and invalidity of Wi-Lan's patent.
Status: Defendants won on summary judgement.
Filed: May 11, 2015

Location: United States District Court for the District of Delaware

Fish & Richardson, Washington, DC
Case Realtime vs. EchoStar Corp., Hughes Network Systems LLC, **CivilAction No. 6: 17·CY-00084-JDL.**
Project: Expert report and deposition on invalidity of Realtime's patents.
Status: Parties settled.
Filed: February 14, 2017
Location: United States District Court for the Eastern District of Texas

Akin Gump, Fish & Richardson, Finnegan, Baker Hostetler,Washington, DC
Case Broadcom vs. Vizio, LG, Funai, MediaTek, MStar, **Investigation No. 337-TA-1047**
Project: Expert report, deposition and trial testimony on non-infringement of Broadcom's patent.
Status: Final Determination in favor of Respondents.
Filed: March 7, 2017
Location: International Trade Commission

Jones Day, Cleveland, OH
Case Avid Technology vs. Harmonic, **Case No. C.A. No. 12-627-GMS**
Project: Expert reports and deposition on infringement of Avid's patent.
Status: Parties settled before trial.
Filed: May 21, 2012
Location: United States District Court for the District of Delaware

Haynes and Boone, Dallas, TX
Case Realtime vs. Riverbed, **Case No. 6:15-CV-463-RWS-JDL**
Project: Expert report, deposition and trial testimony (E. District Texas) on invalidity of Realtime patent.
Status: Jury found Realtime patent invalid at trial.
Filed: May 8, 2015
Location: United States District Court for the Eastern District of Texas

Akin Gump, LLP, Irvine, CA
Case Personalized Media Communications "PMC" vs. TPV et al, **Case No. 2:15-cv-01366-JRG-RSP**
Project: Declaration in support of claim construction brief.
Status: Parties settled.
Filed: July 30, 2015
Location: United States District Court for the Eastern District of Texas

Feinberg, Day, LLP, Menlo Park, CA
Case Parthenon Unified Memory Architecture "PUMA" vs. Apple, **Case No. 2:15-cv-00621**
Project: Expert report and deposition concerning unified memory

PELOTON EX. 1037

architecture.
Status: Trial stayed at request of PUMA. Parties settled.
Filed: May 1, 2015
Location: United States District Court for the Eastern District of Texas

Carey, Rodriguez, LLP, Miami
Case *Twentieth Century Fox Home Entertainment, LLC, Paramount Pictures Corp., vs. Nissim Corp., **Case No. 14-81349/813450-cv-MARRA**
Project: Expert witness for patent owner in counterclaims for infringement. Declaration and expert testimony at Markman Hearings concerning DVDstandards essential patents.
Status: Parties settled before trial.
Filed: June 16, 2014
Location: United States District Court for the Central District of California

*Nissim asserted its patents against Twentieth Century Fox and Paramount. The latter filed a complaint seeking a declaratory judgmentof non-infringement and invalidity.

TechKnowledge Law Group, Turner Boyd LLP & O'Melveny &Myers LLP, Los Angeles,
Case Florida Atlantic University Research Corporation vs. Acer, ASUS &TPV, **Case No. 9:12-cv-80701**
Project: Expert testimony at Markman Hearings concerning scan converterdesign. Expert reports and deposition testimony.
Status: Parties settled before trial.
Filed: June 29, 2012
Location: United States District Court for the Southern District of Florida

Finnegan, Henderson, Farabow, Garrett & Dunner, LLP
Case WiLAN vs. Toshiba, **Case No. 1:12-Civ-23744**
Project: Expert reports & deposition testimony concerning digital televisiondesign.
Status: Parties settled before trial.
Filed: October 15, 2012
Location: United States District Court for the Southern District of Florida

O'Melveny & Myers LLP, Los Angeles & Akin Gump LLP, Dallas
Case Hitachi vs. TPV, **Case No. 2:10-CV-260-JRG**
Project: Expert reports, depositions & trial testimony (E. District Texas) concerning digital television design.
Status: Jury found no infringement of Hitachi's patents by TPV and found Hitachi's patents invalid. (Partially reversed by JMOL)
Filed: July 22, 2010
Location: United States District Court for the Eastern District of Texas

Fish & Richardson P.C. San Diego

Case: Multimedia Patent Trust vs. Apple & LG, **Case No. 3:10-cv-2618 H**
Project: Expert report, & deposition testimony concerning development of technology, standards and patents for video coding.
Status: Jury found no infringement of MPT's patents and found MPT's patentsinvalid.
Filed: December 20, 2012
Location: United States District Court for the Southern District of California

Gibson Dunn LLP, Palo Alto

Case: Realtime Data vs. Verizon Wireless & T-Mobile, **Case No. 6:10-cv-00493-LED**
Project: Expert reports, depositions and testifying expert in jury trial (E. District Texas) concerning infringement and validity of patents related to data transmission.
Status: Jury found no infringement of Realtime Data's patents by T-Mobile, and found Realtime Data's patents invalid.
Filed: September 23, 2010
Location: United States District Court for the Eastern District of Texas

O'Melveny & Myers LLP, San Francisco

Case: MobileMediaIdeas vs. Apple, **Case No. 10-258-SLR**
Project: Expert reports and deposition, concerning infringement and validity ofpatents related to MPEG Audio Layer III ("mp3") coding.
Status: Trial bifurcated.
Filed: March 31, 2010
Location: United States District Court for the District of Delaware

Jones Day, Cleveland

Case: Multimedia Patent Trust Vs. Vizio, **Case No. 09-CV-0278-H (CAB)**
Project: Expert report, concerning infringement of patents related to H.264 videocoding. (Slated for deposition and jury trial)
Status: Parties settled on the day before my deposition.
Filed: February 13, 2009
Location: United States District Court for the Southern District of California

Kellog, Huber, et al, Washington, DC

Case: Active Video Vs. Verizon, No. 2:10-cv-00248-RAJ-FBS; 2011
Project: Expert report, deposition and testifying expert in jury trial concerning infringement of patents related to video-on-demand
Status: Jury finding of infringement with significantly reduced damages and nofinding of willful infringement.
Filed: May 27, 2010
Location: United States District Court for the Eastern District of Virginia

Jones Day, Washington, DC

Case: Funai Vs. Vizio, et al, ITC Investigation No. 337-TA-617; 2010

Project: Expert report, deposition and testifying expert in ITC hearing concerning infringement of a patent related to ATSC broadcast standards

Status: Parties settled after the hearing following Initial Determination adverseto complainant.

Filed: November 15, 2007

Location: International Trade Commission

Wilson Sonsini, Goodrich and Rosati, Palo Alto, CA.

Case: Terayon vs. RGB Networks; 2007

Project: Expert report for defendant in a contract dispute alleging violation of anon-compete agreement.

Status: Mediation hearing resolved the dispute to the satisfaction of both parties.

Filed:

Location:

Wilmer Cutler Pickering Hale and Dorr, Boston, MA

Case: Qualcomm Inc. vs. Broadcom Corp. No. 05 CV 1958 B (BLM); 2007

Project: Expert report and deposition on behalf of Broadcom against assertions of infringement of patents concerning video encoding and decoding, and on Qualcomm's compliance with the policies and procedures for IPR policy in the H.264 standards committee (JVT of ITU-ISO/IEC).

Status: Broadcom found not guilty of infringing Qualcomm's patents. The patents were determined to be not essential for implementing the H.264standard. Qualcomm found guilty of inequitable behavior in the manner of their participation in the H.264 standards committee. Qualcomm's patents held unenforceable against H.264.

Filed: October 14, 2005

Location: United States District Court for the Southern District of California

Greenberg Glusker Fields Claman Machtinger & Kinsella.

Case: DTS vs. MediaTek; 2005

Project: Expert report for defendant in a contract dispute related to hacking into semiconductor chips to enable functionality for which a license fee was payable.

Status: Mediation hearing resolved the dispute to the satisfaction of both parties. The Mediator personally thanked me for the clarity of my report, which covered technical, business and licensing issues.

Arvay Finley Barristers, Victoria, BC, Canada.

Case: AVT Audio Visual Telecommunications vs. University of BritishColumbia; 2005

Project: Expert report and testimony on behalf of AVT in a contract

disputerelated to mobile video communication including failure to discloseintellectual property.
Status: Arbitration hearing resulted in adverse ruling to AVT.

Thelen Reid & Priest, San Jose, CA.
Case Toshiba Corp. vs. Trigem Computer Inc. & Trigem America Corp. CaseNo. CV-03-4558-GHK(AJWx); 2005
Project: Expert report on behalf of Trigem regarding invalidity of patents relatingto video and sub-picture data in multimedia computer systems.
Status: Suspended due to insolvency of Trigem.
Filed: June 26, 2003
Location: United States District Court for the Central District of California

Morrison & Foerster LLP, San Francisco, CA.
Case TiVo Inc. vs. EchoStar Communications Corp., EchoStar DBS Corp., EchoStar Technologies Corp, & EchoStar LLC, Case No. 2-04CV-01;2005
Project: Expert report and deposition on behalf of EchoStar against assertions of infringement of a patent concerning personal video recorders (PVR).
Status: Adverse ruling to EchoStar.
Filed: January 5, 2004
Location: United States District Court for the Eastern District of Texas

Pinsent Curtis Biddle, Leeds, UK
Case Thomson Licensing S.A. and Deutsche Thomson Brandt GmbH vs. PaceMicro Technology PLC. Case No. HC 2000 No. 1584; 2001
Project: Expert report and slated to testify on behalf of Pace arguing invalidity ofpatent and defending against assertions infringement of a patent concerning interlaced video coding.
Status: Parties agreed to settlement on the second day of trial. Settlement termswere very favorable to defendant, and shortly after the trial, Thomson joined the MPEGLA patent pool.
Filed: November 11, 2001
Location: United Kingdom, Patents Court

Education

1974	University of Sussex, England	Ph.D., Applied Sciences (EE/CS) Thesis on "Orthogonal Transform Coding of Still and Moving Pictures". All research performed in residence at the Image Processing Institute, USC Los Angeles, CA.

PELOTON EX. 1037

1970	University of Liverpool, England	Bachelor of Engineering with Honours, Physical Electronics

Publications (Partial List)

C Reader, "Orthogonal Transform Coding of Still and Moving Pictures", Ph.D. thesis, U. Sussex, England, 1973.

C. Reader, "Intraframe and Interframe Adaptive Transform Coding." SPIE Vol. 66, pp. 108-117, *Efficient Transmission of Pictorial Information* (1975).

C. Reader, W.H. Chen, "Local Retransmission of Compressed Imagery Data", SPIE Vol. 149 pp. 196-204, *Applications of Digital Image Processing* (1978).

L. Hubble, C. Reader, "State of the Art in Image Display Systems", SPIE Vol. 199, pp 2-8, *Advances in Display Technology* (1979).

C. Reader, W. D. Flanagan, "Design Considerations for Real-Time Image Processing", SPIE Vol. 180, *Real-Time Signal Processing II,* (1979).

C. Reader, L. Hubble, "Trends in Image Display Systems", Proc. IEEE, Vol. 69, No. 5, pp. 606-614, (1981).

J. Adams, C. Patton, C. Reader, D. Zamora, "Hardware for Geometric Warping", Electronic Imaging, April 1984.

Digital Image Processing Techniques (Computational Techniques), Michael P. Ekstrom (Editor), Chapter describing hardware for real-time image processing and display systems, Academic Press, 1984, pp. 289-360.

C. Reader, et al, "A New Architecture for Real-Time Image Processing," SPIE Vol. 534, pp. 72-78, *Architectures and Algorithms for Digital Image Processing II* (1985).

B. Thacker, R. Rinaldi, C. Reader, "Multiwindow Displays of Text, Graphics and Images", SPIE Vol. 757, pp. 104-110, *Methods of Handling and Processing Imagery* (1987).

Keynote opening speech at IEEE Conference on Image Processing, 1994.

C. Reader, "MPEG4: Coding for Content, Interactivity, and Universal Accessibility," Optical Engineering, Vol. 35, No. 1 pp. 104-108 (1996).

C. Reader, P. Schirling, A. Puri, MPEG Tutorial paper at IEC – NCF/Infovision '97.

PELOTON EX. 1037

O. Avaro, P.A. Chou, A. Eleftheriadis, C. Herpel, C. Reader, J. Signes, "The MPEG4 Systems and Description Languages: a Way Ahead in Audio Visual Information Representation", Signal Processing: Image Communication, Vol. 9, No. 4, pp. 385-431 (1997).

C Reader, "What MPEG-4 means to me", Sig. Proc.: Image Comm. 9(4): 467, 1997

MPEG Video Compression Standard, Edited by Mitchell, Pennebaker, Fogg, Le Gall. Chapman & Hall, 1997. Chapter describing the process of establishing the MPEGLA patent pool, Chapter 16, *MPEG Patents,* pp.357-362.

W Gao, C Reader, F Wu, Y He, L Yu, H Lu, S Yang, T Huang, X Pan, "AVS - The Chinese Next-Generation Video Coding Standard", Proc. NAB Conf., 1994.

C Reader, "Origins of the performance of H.264/AVC: an account of the development of H.263 and H.264 coding tools", SPIE Vol. 5909, pp59090W-1-8 Applications of Digital Image Processing XXVIII (2005).

C Reader, "AVS Intellectual Property Rights (IPR) Policy, J. Comput. Sci. & Technol., Co. 21, No. 3 (May 2006).

Q Huang, W Gao, D Zhao, C Reader, "A Real-Time Video Deinterlacing Scheme for MPEG-2 to AVS Transcoding", Advances in Multimedia Information Processing - PCM 2006, Vol. 4261/2006, Springer Berlin / Heidelberg.

W Gao, S Ma, C Reader, "An End-to-End Application System of AVS: AVS-IPTV in China". PCM 2007: 50-57

C Reader, "Technical design & IPR analysis for royalty-free video codecs". PCS 2010: 102-105

J Chen, F Xu, Y He, J D Villasenor, Y Han, Y Xu, Y Rong, C Reader, J Wen, "Efficient Video Coding Using Legacy Algorithmic Approaches". IEEE Trans. Multimedia 14(1): 111-120 (2012)

W Gao, T Huang, C Reader, W Dou, X Chen, "IEEE Standards for Advanced Audio and Video Coding in Emerging Applications", Computer, vol.47, no. 5, pp. 81-83, May 2014.

Ma S, Huang T, Reader C, Gao W, AVS2-Making video coding smarter [Standards in a Nutshell], IEEE Signal Processing Magazine, vol. 32, no. 2, pp. 172 - 182, 2015.

Wang R, Huang T, Park S-H, Kim J-G, Jang E S, Reader C, Gao W, The MPEG Internet Video-Coding Standard [Standards in a Nutshell], IEEE Signal Processing Magazine, Vol. 33, No. 5, pp. 164-172, Sep. 2016.

Reader C, Patent Landscape for Royalty-Free Video Coding, SPIE Vol. 9971, Sep., 2016

Patents

Patent Number	Date Issued	Title
6,192,073	2000	Methods and apparatus for processing video data
5,845,112	2000	Method for performing dead-zone quantization in a single processor instruction.

Academic Positions

Taught "early bird" classes at Santa Clara University in Image Processing and Digital Signal Processing

Adjunct Professor of the National Engineering Laboratory for Video Technology, in the Computer Science Department at Peking University, Beijing, China.

Professional Associations and Achievements

- ISO/IEC Certificate of appreciation for development of the MPEG4 standard.
- Senior Member IEEE.
- Member SPIE.
- Member ACM.
- Member AES.
- Member SMPTE.

Contact Information

- 1654 Hillstone Ave.
  Escondido
  CA 92029
- 408 867 4884 Mobile-Office
- cliffreader Skype
- CliffReader WeChat
- cliff@reader.com
- www.reader.com