US 20090094321A1

(19) United States

(12) Patent Application Publication

Ueda et al.

(10) Pub. No.: US 2009/0094321 A1

(43) Pub. Date: Apr. 9, 2009

(54) CONTENT PROVIDING DEVICE, DATA PROCESSING METHOD, AND COMPUTER PROGRAM

(75) Inventors: **Kenjiro Ueda**, Kanagawa (JP); **Shinichi Fujita**, Shizuoka (JP)

Correspondence Address:
OBLON, SPIVAK, MCCLELLAND MAIER & NEUSTADT, P.C.
1940 DUKE STREET
ALEXANDRIA, VA 22314 (US)

(73) Assignee: **Sony Corporation**, Tokyo (JP)

(21) Appl. No.: **12/234,075**

(22) Filed: **Sep. 19, 2008**

(30) **Foreign Application Priority Data**

Oct. 4, 2007 (JP) 2007-261403

Publication Classification

(51) **Int. Cl.**
G06F 15/16 (2006.01)

(52) **U.S. Cl.** **709/203**

(57) **ABSTRACT**

A content providing device serving as a server for executing content providing processing as to a client, includes: a data processing unit for executing content providing processing in response to a content request from the client; wherein the data processing unit receives a disc recorded identifier for identifying a disc or content recorded in the mounted disc of the client, and the identification information of at least either the device identifier of a device on the client side, or the user identifier of a user on the client side, from the client, accumulates the history information of the disc recorded identifier received from the client in a management database in increments of devices or users, and analyzes the user's preference on the client side to provide a content adapted to the user's preference. Thus, content which interests a user or commercial content can be selectively provided to the user.

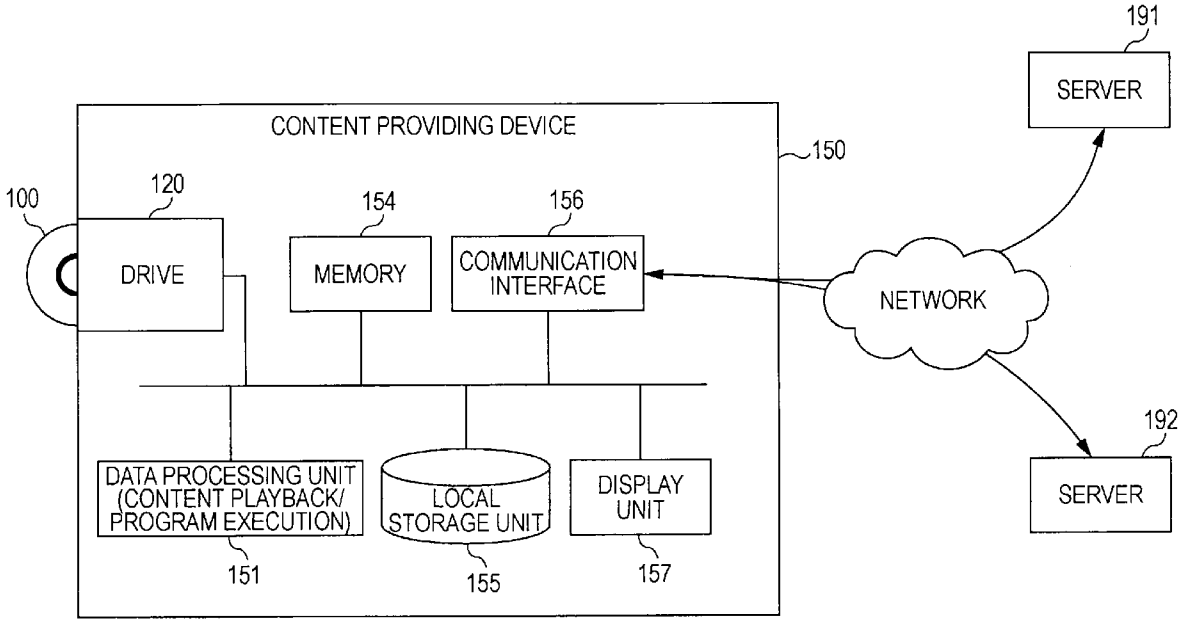

FIG. 1

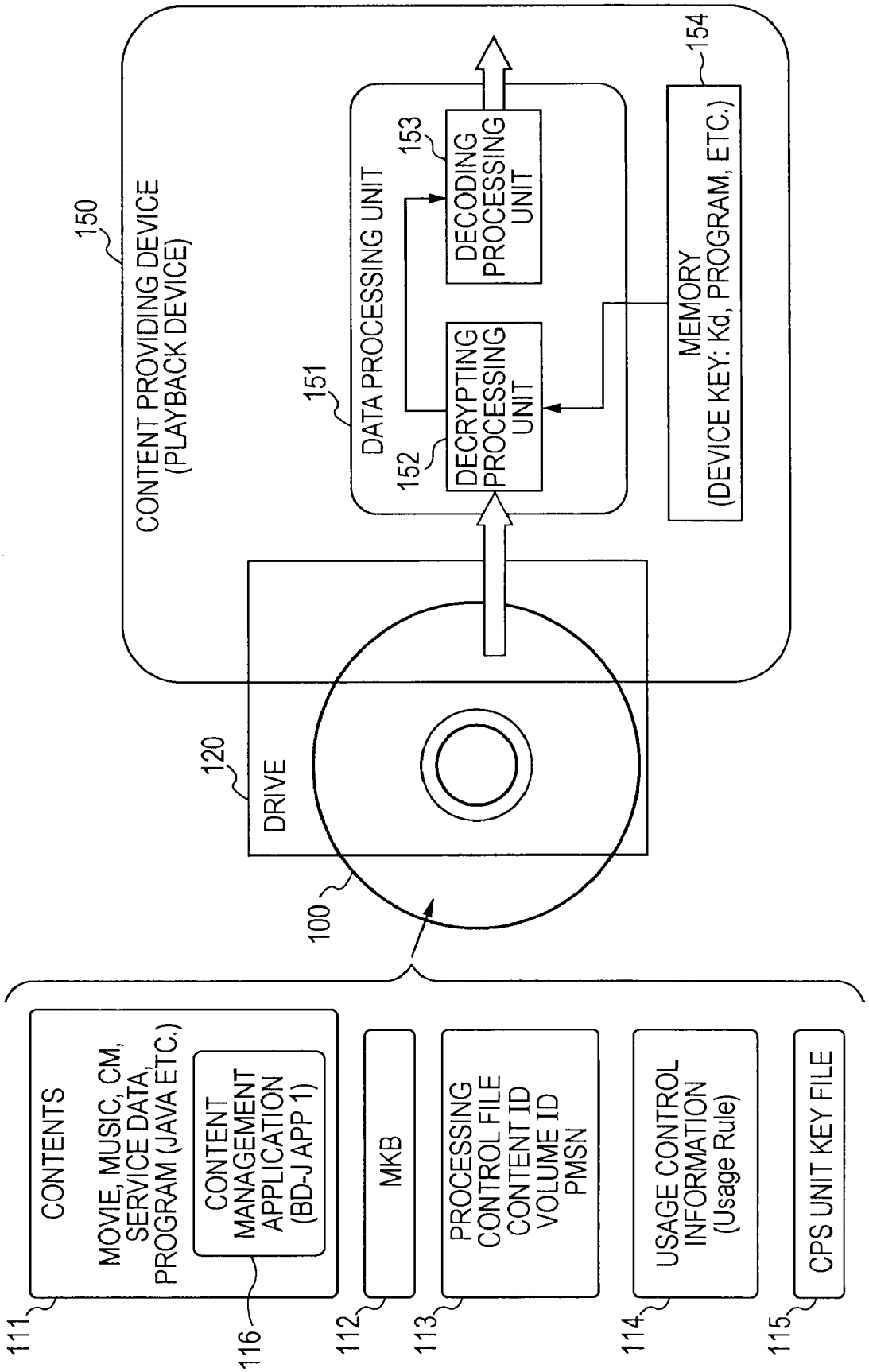
150
CONTENT PROVIDING DEVICE
(PLAYBACK DEVICE)
151
DATA PROCESSING UNIT
152
DECRYPTING PROCESSING UNIT
153
DECODING PROCESSING UNIT
154
MEMORY
(DEVICE KEY: Kd, PROGRAM, ETC.)
120
DRIVE
100
111
CONTENTS
MOVIE, MUSIC, CM, SERVICE DATA, PROGRAM (JAVA ETC.)
116
CONTENT MANAGEMENT APPLICATION (BD-J APP 1)
112
MKB
113
PROCESSING CONTROL FILE
CONTENT ID
VOLUME ID
PMSN
114
USAGE CONTROL INFORMATION
(Usage Rule)
115
CPS UNIT KEY FILE

FIG. 2

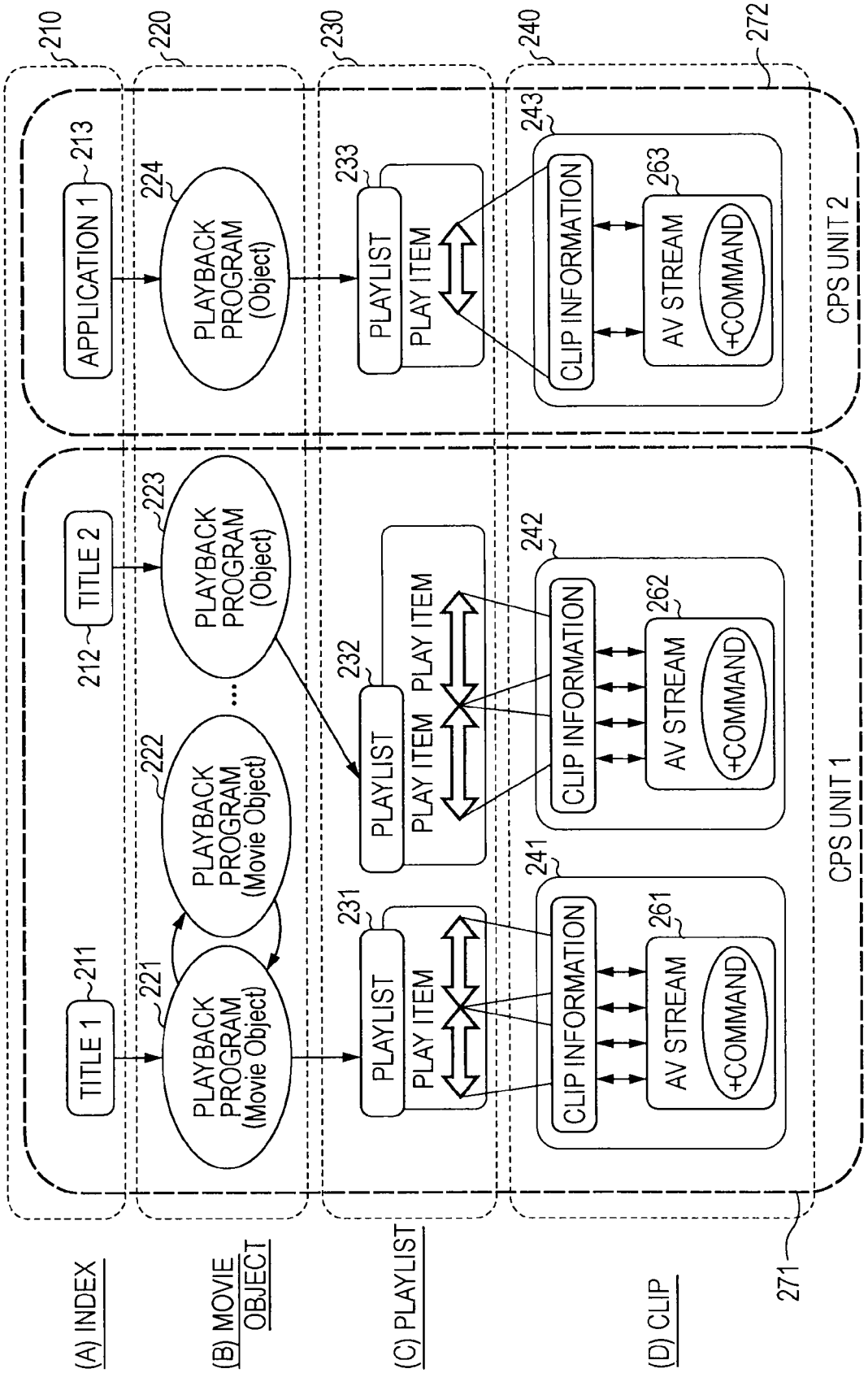
210
220
230
240
272
APPLICATION 1
213
224
PLAYBACK PROGRAM (Object)
233
PLAYLIST
PLAY ITEM
243
CLIP INFORMATION
263
AV STREAM
+COMMAND
CPS UNIT 2
TITLE 2
212
223
PLAYBACK PROGRAM (Object)
222
PLAYBACK PROGRAM (Movie Object)
TITLE 1
211
221
PLAYBACK PROGRAM (Movie Object)
232
PLAYLIST
PLAY ITEM
PLAY ITEM
242
CLIP INFORMATION
262
AV STREAM
+COMMAND
231
PLAYLIST
PLAY ITEM
241
CLIP INFORMATION
261
AV STREAM
+COMMAND
CPS UNIT 1
271
(A) INDEX
(B) MOVIE OBJECT
(C) PLAYLIST
(D) CLIP

FIG. 3

INDEX (INDEX DISTINGUISHABLE WITH APPLICATION LAYER, SUCH AS TITLE OR THE LIKE)	CONTENT MANAGEMENT UNIT NUMBER (CPS UNIT NUMBER)	ENCRYPTED CPS UNIT KEY
TITLE 1	CPS1	[Ku1]
TITLE 2	CPS1	[Ku1]
APPLICATION 1	CPS2	[Ku2]
APPLICATION 2	CPS3	[Ku3]
⋮	⋮	⋮
DATA GROUP 1	CPS4	[Ku4]
DATA GROUP 2	CPS5	[Ku5]
⋮	⋮	⋮

FIG. 4

	NUMBER OF BYTES
Unit Key File{	
Number of Indexes (Number of Titles) (n_t);	2
for (i = 0; i < n_t; i++) {	
CPS unit number for index (Title) #i;	2
}	
Number of CPS Units (n_{cu});	2
for (i = 0; i < n_{cu}; i++) {	
Unit Classification Number for CPS Unit #i;	1
reserved;	15
Encrypted CPS Unit Key for CPS Unit #i;	16
}	
}	

FIG. 5

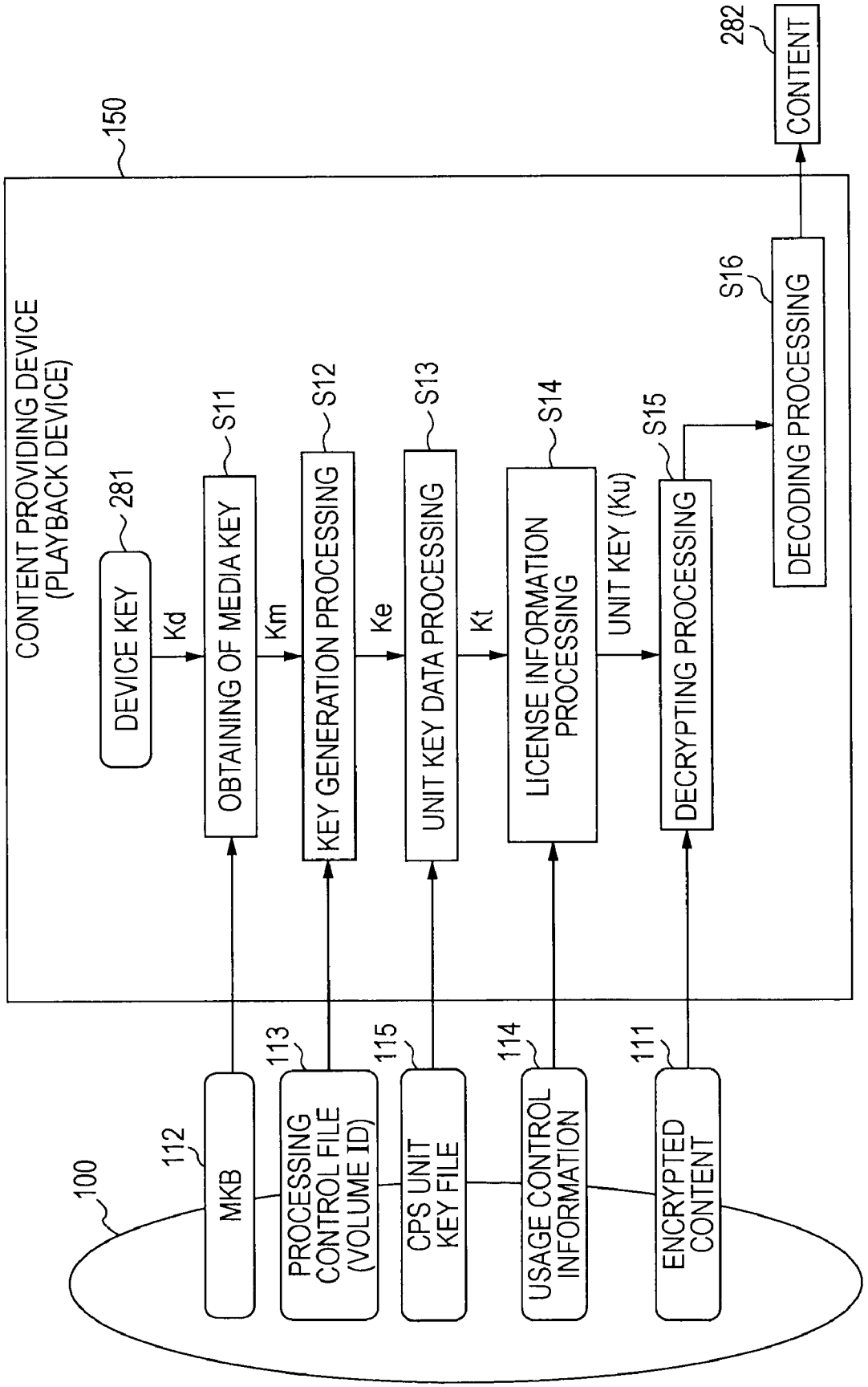
CONTENT PROVIDING DEVICE
(PLAYBACK DEVICE)
150
DEVICE KEY
281
Kd
OBTAINING OF MEDIA KEY
S11
Km
KEY GENERATION PROCESSING
S12
Ke
UNIT KEY DATA PROCESSING
S13
Kt
LICENSE INFORMATION PROCESSING
S14
UNIT KEY (Ku)
DECRYPTING PROCESSING
S15
DECODING PROCESSING
S16
CONTENT
282
100
MKB
112
PROCESSING CONTROL FILE (VOLUME ID)
113
CPS UNIT KEY FILE
115
USAGE CONTROL INFORMATION
114
ENCRYPTED CONTENT
111

FIG. 6

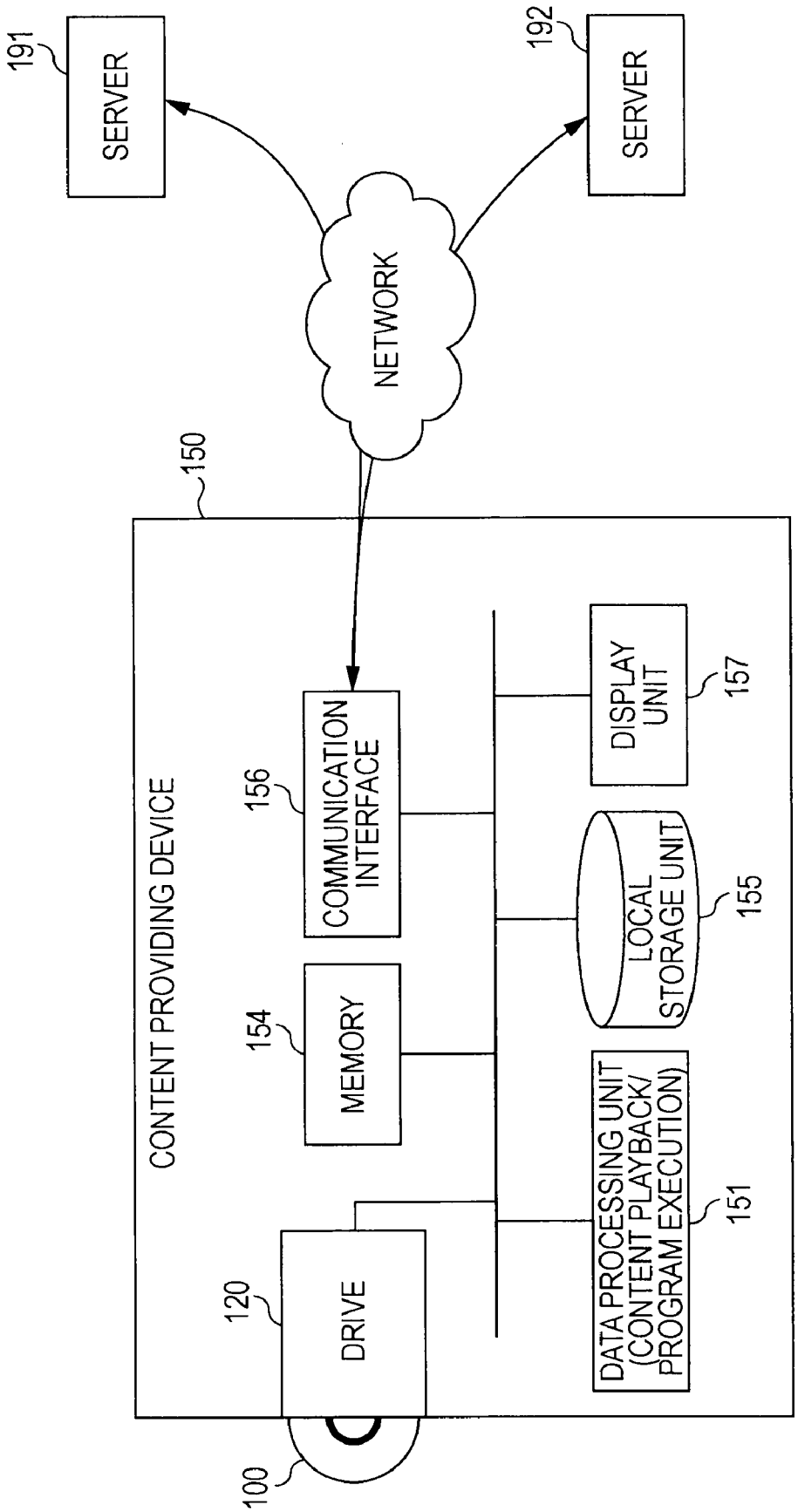
191
SERVER
192
SERVER
NETWORK
150
CONTENT PROVIDING DEVICE
156
COMMUNICATION INTERFACE
154
MEMORY
120
DRIVE
100
DISPLAY UNIT
157
LOCAL STORAGE UNIT
155
DATA PROCESSING UNIT (CONTENT PLAYBACK/ PROGRAM EXECUTION)
151

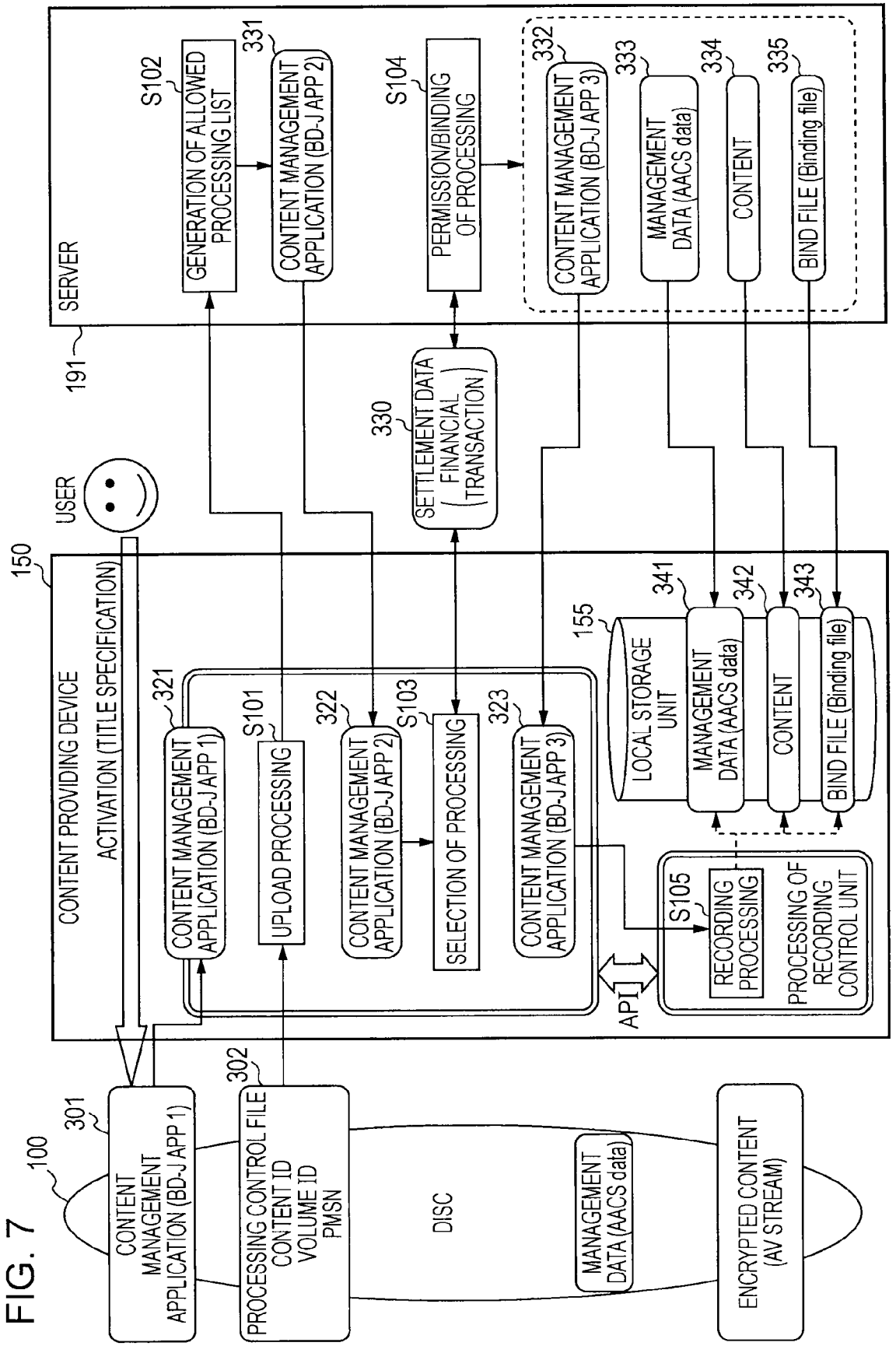
FIG. 7
100
CONTENT MANAGEMENT APPLICATION (BD-J APP 1)
301
PROCESSING CONTROL FILE
CONTENT ID
VOLUME ID
PMSN
302
DISC
MANAGEMENT DATA (AACS data)
ENCRYPTED CONTENT (AV STREAM)
150
CONTENT PROVIDING DEVICE
ACTIVATION (TITLE SPECIFICATION)
CONTENT MANAGEMENT APPLICATION (BD-J APP 1)
321
UPLOAD PROCESSING
S101
CONTENT MANAGEMENT APPLICATION (BD-J APP 2)
322
SELECTION OF PROCESSING
S103
CONTENT MANAGEMENT APPLICATION (BD-J APP 3)
323
API
RECORDING PROCESSING
S105
PROCESSING OF RECORDING CONTROL UNIT
LOCAL STORAGE UNIT
155
MANAGEMENT DATA (AACS data)
341
CONTENT
342
BIND FILE (Binding file)
343
USER
SERVER
191
GENERATION OF ALLOWED PROCESSING LIST
S102
CONTENT MANAGEMENT APPLICATION (BD-J APP 2)
331
PERMISSION/BINDING OF PROCESSING
S104
SETTLEMENT DATA (FINANCIAL TRANSACTION)
330
CONTENT MANAGEMENT APPLICATION (BD-J APP 3)
332
MANAGEMENT DATA (AACS data)
333
CONTENT
334
BIND FILE (Binding file)
335

FIG. 8

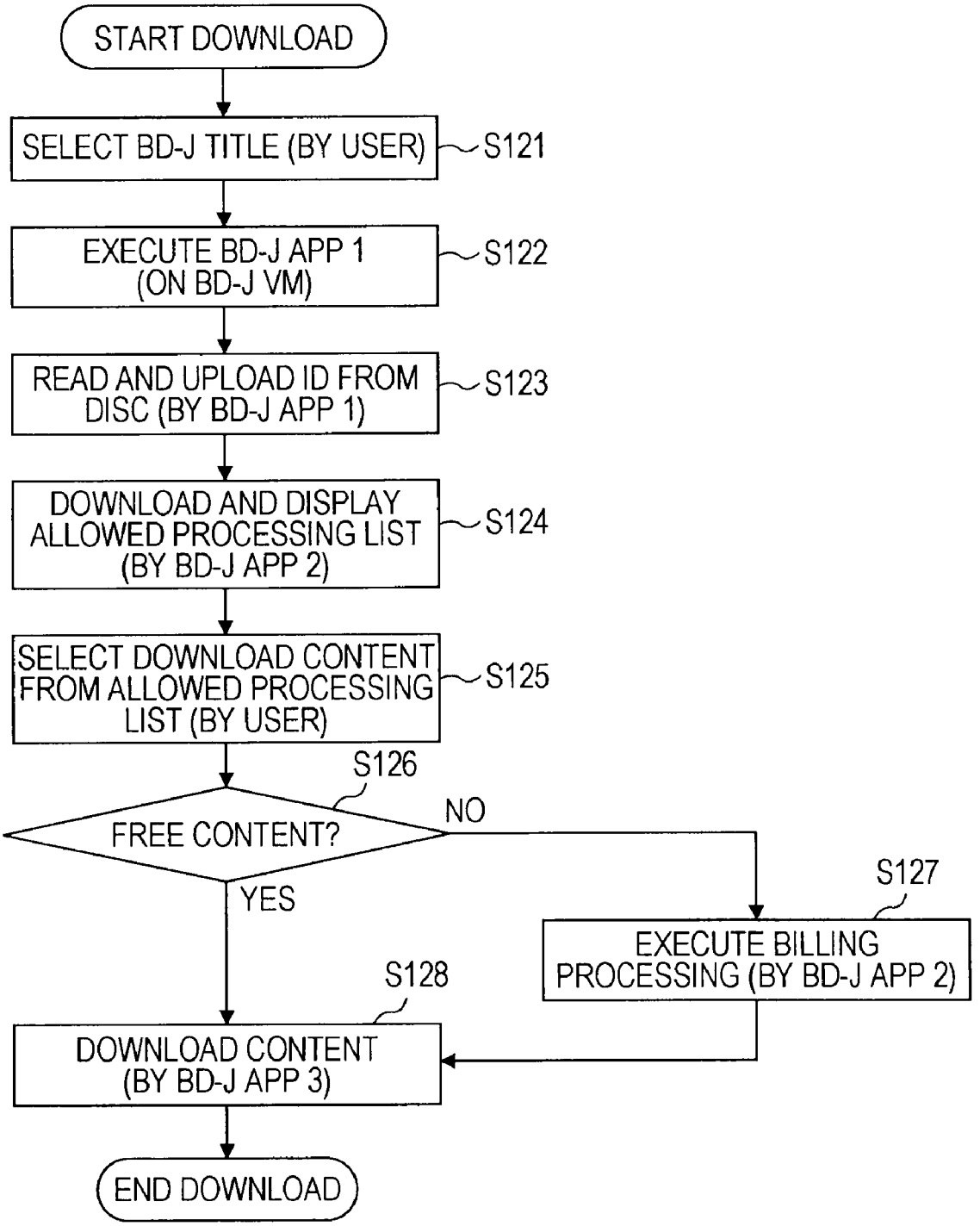
START DOWNLOAD
SELECT BD-J TITLE (BY USER)
S121
EXECUTE BD-J APP 1 (ON BD-J VM)
S122
READ AND UPLOAD ID FROM DISC (BY BD-J APP 1)
S123
DOWNLOAD AND DISPLAY ALLOWED PROCESSING LIST (BY BD-J APP 2)
S124
SELECT DOWNLOAD CONTENT FROM ALLOWED PROCESSING LIST (BY USER)
S125
S126
FREE CONTENT?
NO
YES
S127
EXECUTE BILLING PROCESSING (BY BD-J APP 2)
S128
DOWNLOAD CONTENT (BY BD-J APP 3)
END DOWNLOAD

FIG. 9

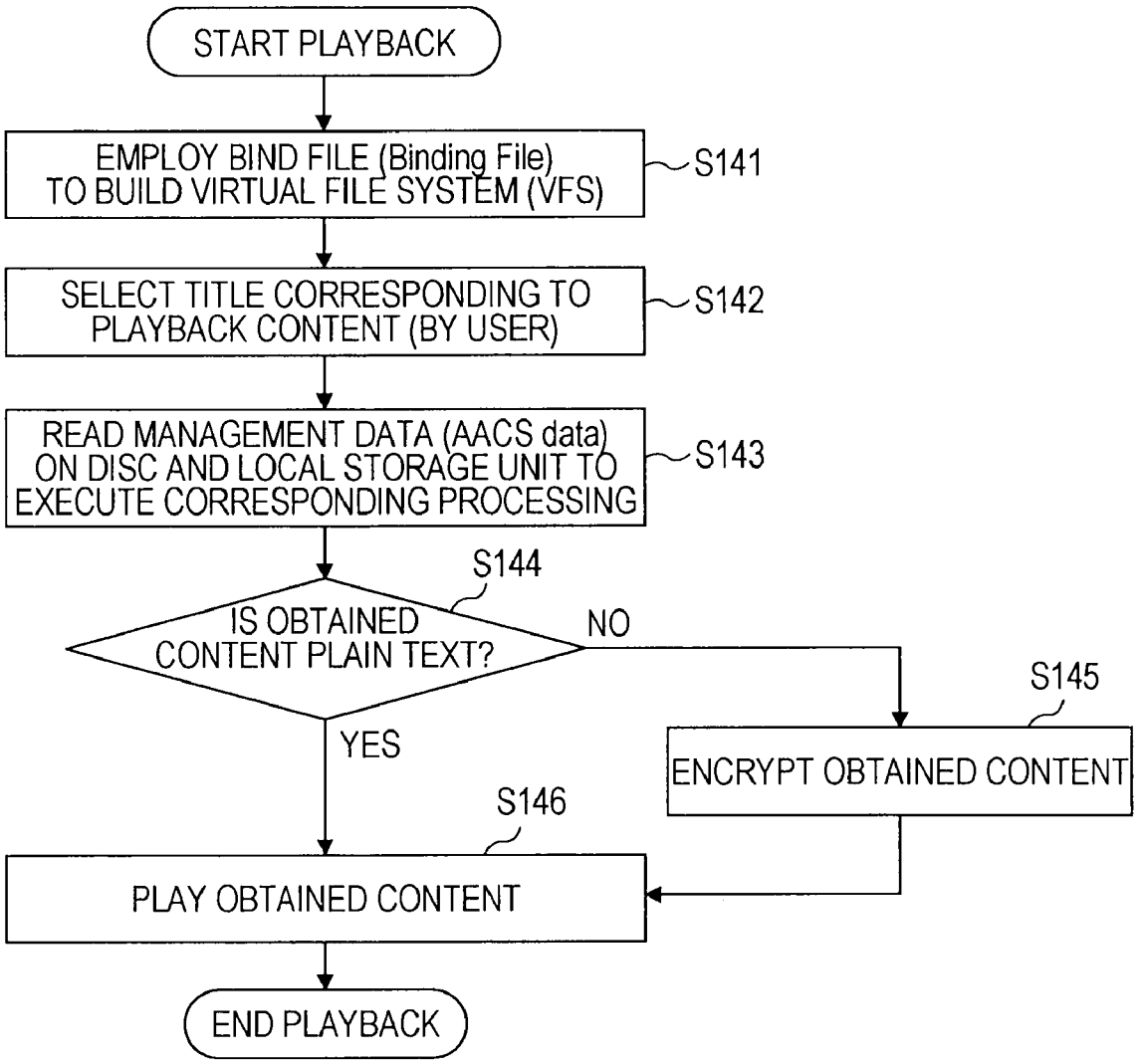
START PLAYBACK
EMPLOY BIND FILE (Binding File) TO BUILD VIRTUAL FILE SYSTEM (VFS)
S141
SELECT TITLE CORRESPONDING TO PLAYBACK CONTENT (BY USER)
S142
READ MANAGEMENT DATA (AACS data) ON DISC AND LOCAL STORAGE UNIT TO EXECUTE CORRESPONDING PROCESSING
S143
S144
IS OBTAINED CONTENT PLAIN TEXT?
NO
YES
S145
ENCRYPT OBTAINED CONTENT
S146
PLAY OBTAINED CONTENT
END PLAYBACK

FIG. 10

INDEX	(a) FILE NAME OF CONTENT ENTITY (DOWNLOAD CONTENT)	(b) PLAYBACK-SPECIFIED CONTENT FILE NAME ON PLAYLIST
1	BINDING_ROOT\DOWNLOAD\001.dat	root\BDMV\STREAM\00002.m2ts
2	BINDING_ROOT\DOWNLOAD\002.dat	root\AACS\Unit_Key_RO.inf
3	BINDING_ROOT\DOWNLOAD\003.dat	root\AACS\Content000.cer
4	BINDING_ROOT\DOWNLOAD\004.dat	root\AACS\CPSUnit00001.cci

FIG. 11

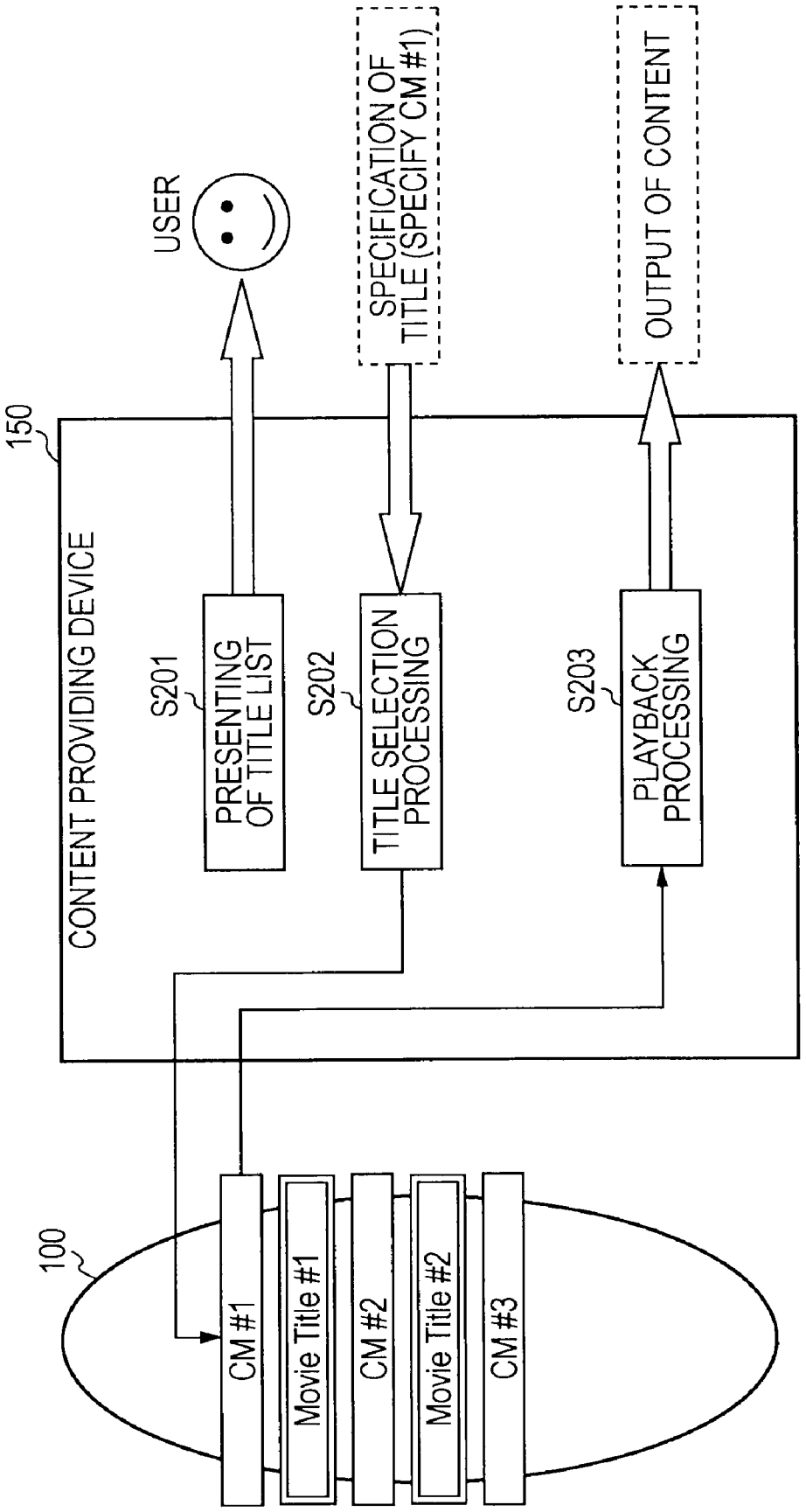
150
CONTENT PROVIDING DEVICE
S201
PRESENTING OF TITLE LIST
S202
TITLE SELECTION PROCESSING
S203
PLAYBACK PROCESSING
USER
SPECIFICATION OF TITLE (SPECIFY CM #1)
OUTPUT OF CONTENT
100
CM #1
Movie Title #1
CM #2
Movie Title #2
CM #3

FIG. 12

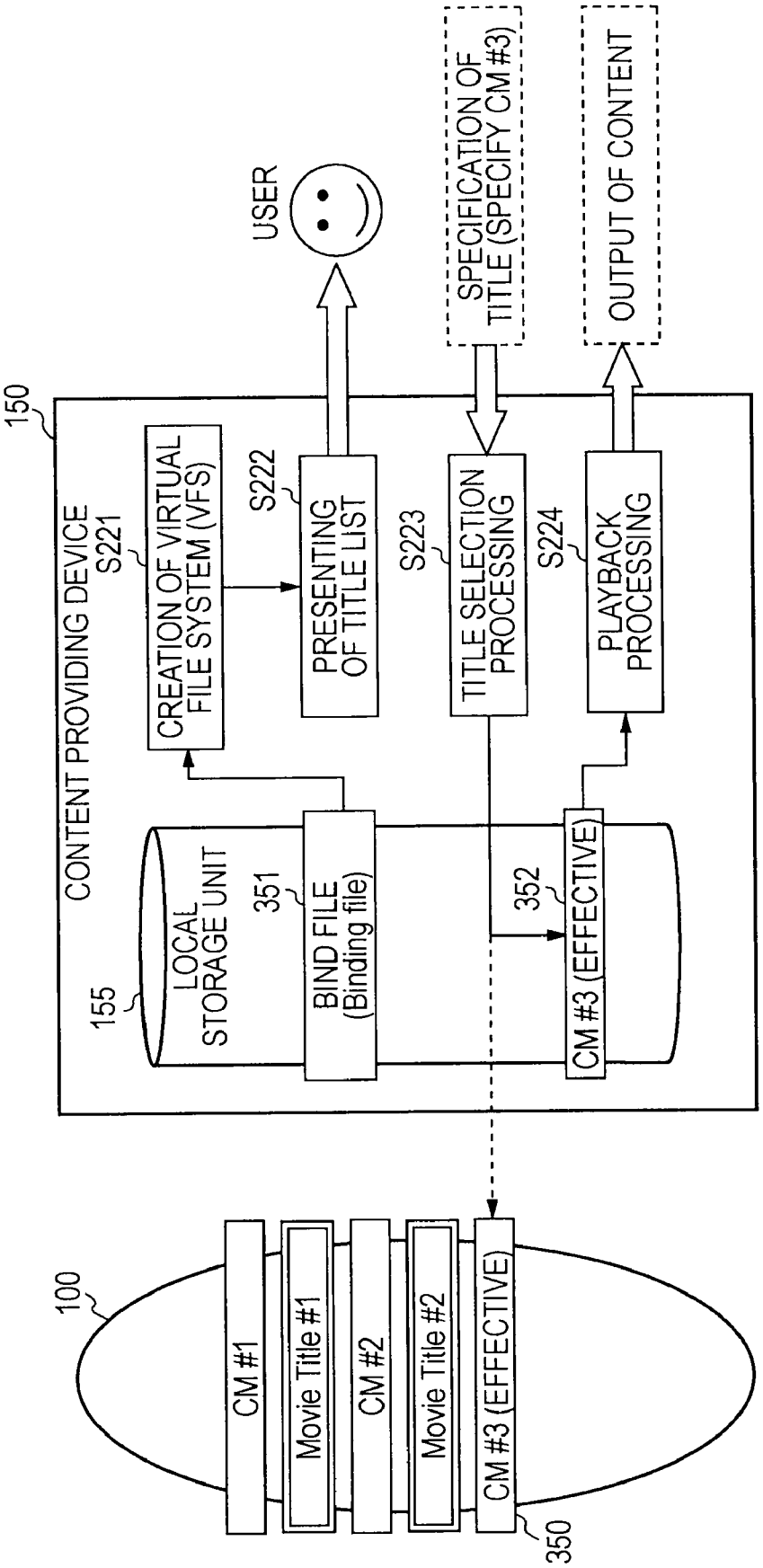
150
CONTENT PROVIDING DEVICE
S221
CREATION OF VIRTUAL FILE SYSTEM (VFS)
S222
PRESENTING OF TITLE LIST
USER
S223
TITLE SELECTION PROCESSING
SPECIFICATION OF TITLE (SPECIFY CM #3)
S224
PLAYBACK PROCESSING
OUTPUT OF CONTENT
155
LOCAL STORAGE UNIT
351
BIND FILE (Binding file)
352
CM #3 (EFFECTIVE)
100
CM #1
Movie Title #1
CM #2
Movie Title #2
CM #3 (EFFECTIVE)
350

FIG. 13

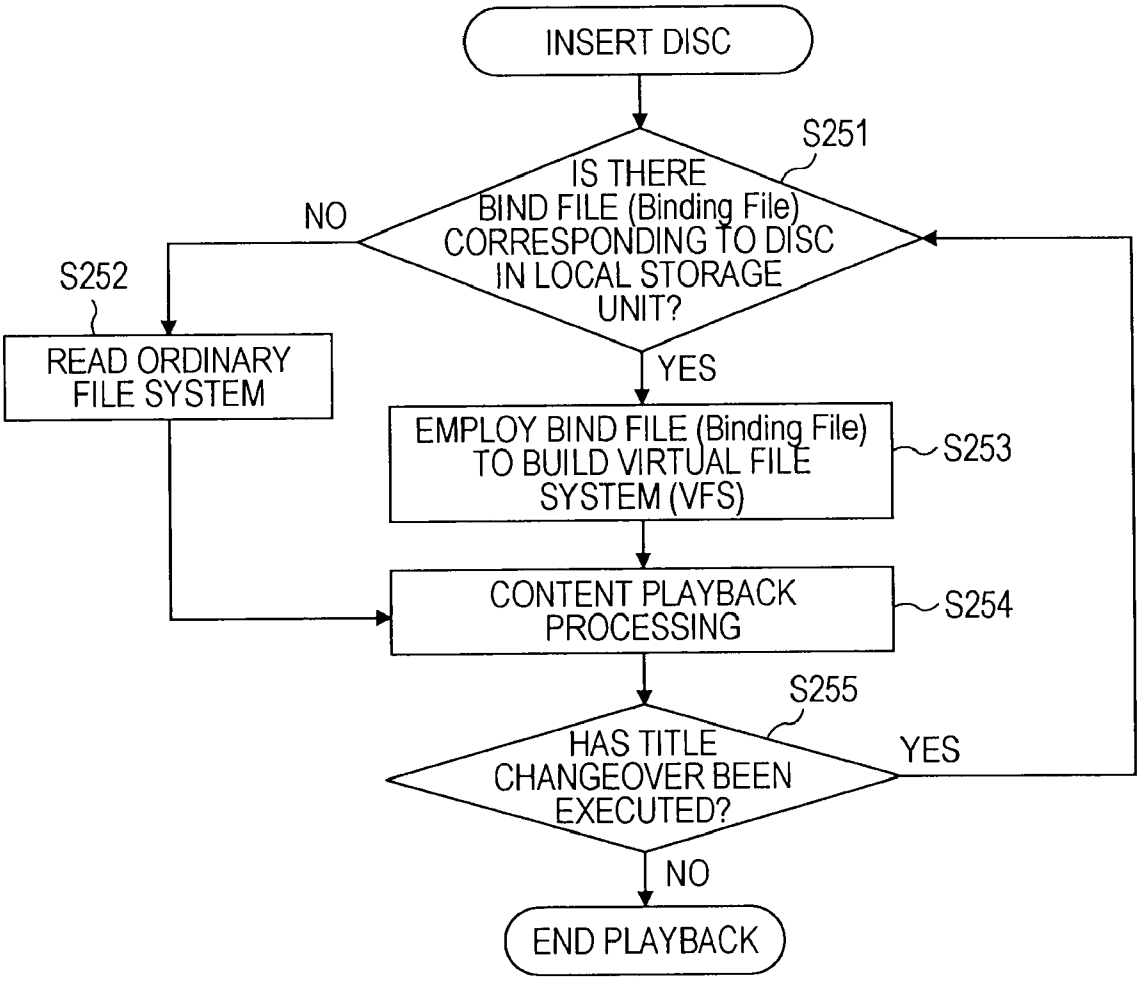
INSERT DISC
S251
IS THERE BIND FILE (Binding File) CORRESPONDING TO DISC IN LOCAL STORAGE UNIT?
NO
S252
READ ORDINARY FILE SYSTEM
YES
EMPLOY BIND FILE (Binding File) TO BUILD VIRTUAL FILE SYSTEM (VFS)
S253
CONTENT PLAYBACK PROCESSING
S254
S255
HAS TITLE CHANGEOVER BEEN EXECUTED?
YES
NO
END PLAYBACK

FIG. 14

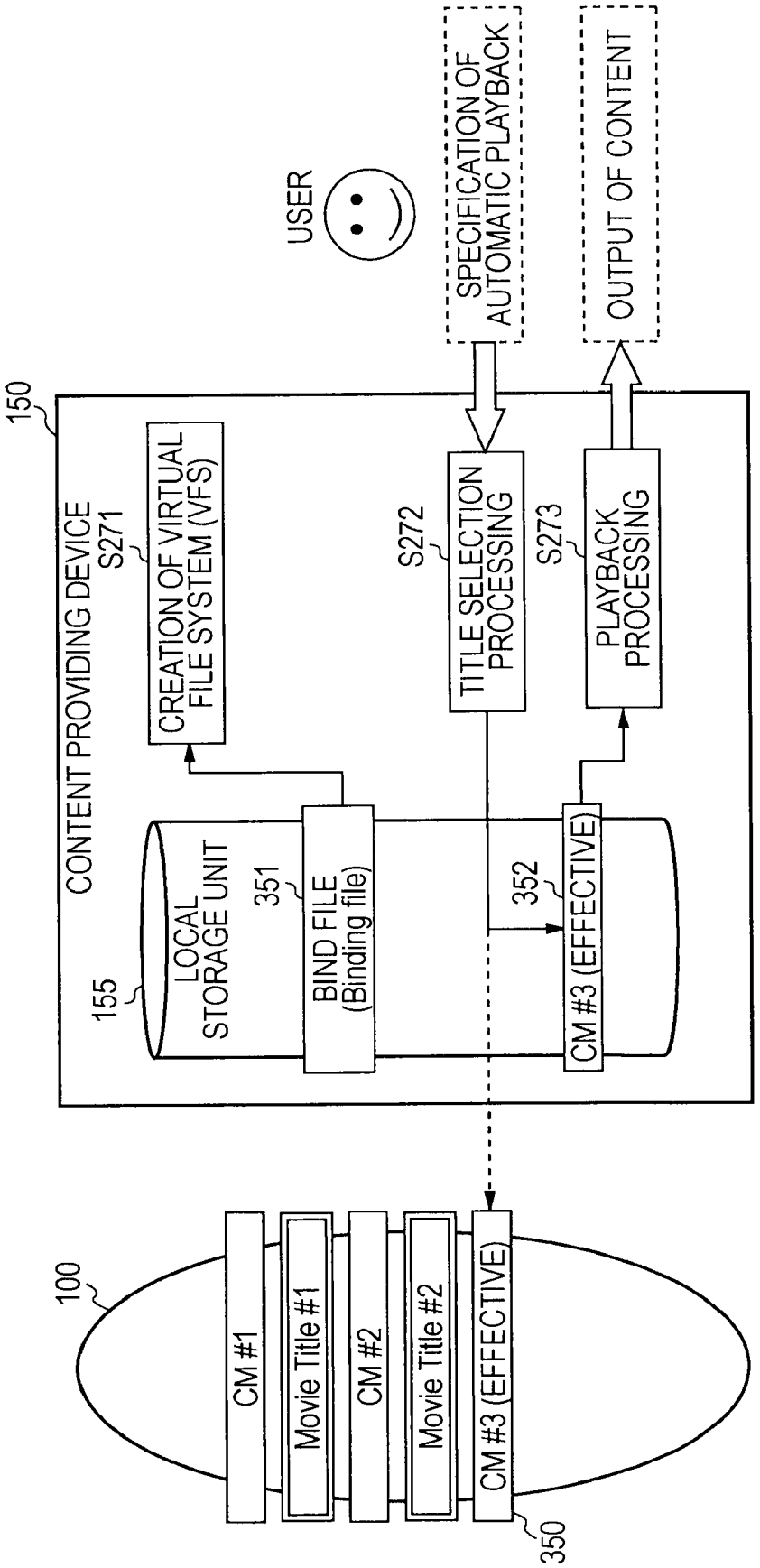
150
CONTENT PROVIDING DEVICE
155
LOCAL STORAGE UNIT
351
BIND FILE (Binding file)
S271
CREATION OF VIRTUAL FILE SYSTEM (VFS)
S272
TITLE SELECTION PROCESSING
S273
PLAYBACK PROCESSING
352
CM #3 (EFFECTIVE)
USER
SPECIFICATION OF AUTOMATIC PLAYBACK
OUTPUT OF CONTENT
100
CM #1
Movie Title #1
CM #2
Movie Title #2
CM #3 (EFFECTIVE)
350

FIG. 15

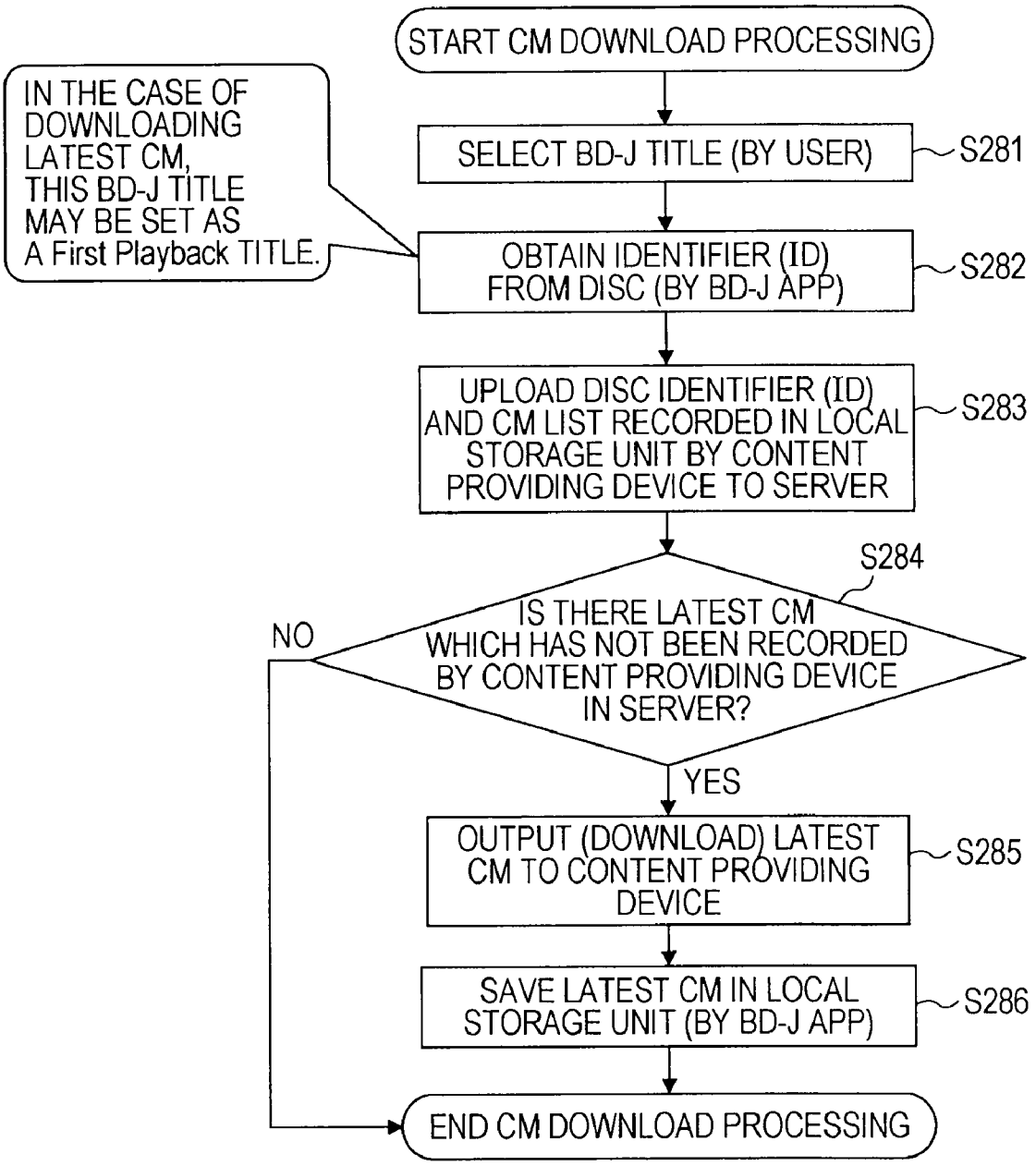
START CM DOWNLOAD PROCESSING
IN THE CASE OF DOWNLOADING LATEST CM, THIS BD-J TITLE MAY BE SET AS A First Playback TITLE.
SELECT BD-J TITLE (BY USER)
S281
OBTAIN IDENTIFIER (ID) FROM DISC (BY BD-J APP)
S282
UPLOAD DISC IDENTIFIER (ID) AND CM LIST RECORDED IN LOCAL STORAGE UNIT BY CONTENT PROVIDING DEVICE TO SERVER
S283
S284
IS THERE LATEST CM WHICH HAS NOT BEEN RECORDED BY CONTENT PROVIDING DEVICE IN SERVER?
NO
YES
OUTPUT (DOWNLOAD) LATEST CM TO CONTENT PROVIDING DEVICE
S285
SAVE LATEST CM IN LOCAL STORAGE UNIT (BY BD-J APP)
S286
END CM DOWNLOAD PROCESSING

FIG. 16

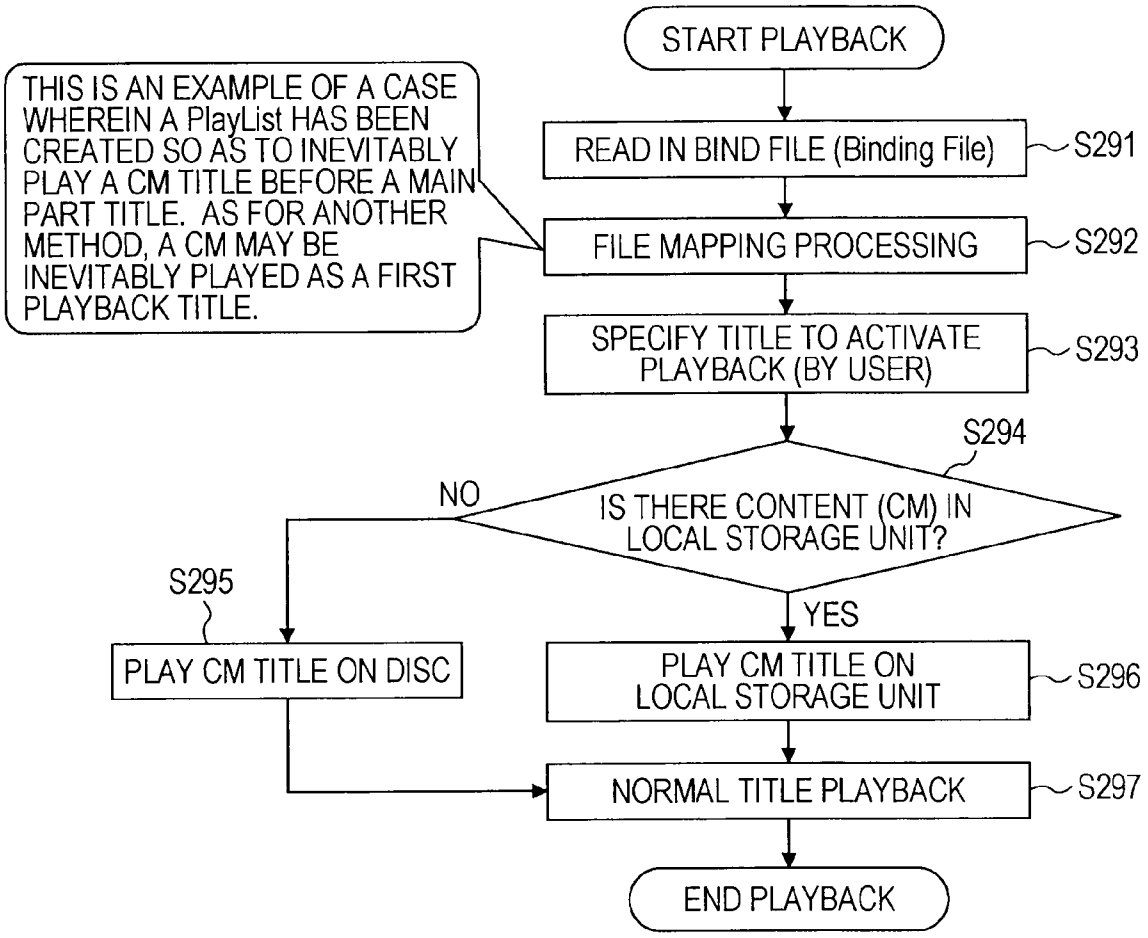
START PLAYBACK
THIS IS AN EXAMPLE OF A CASE WHEREIN A PlayList HAS BEEN CREATED SO AS TO INEVITABLY PLAY A CM TITLE BEFORE A MAIN PART TITLE. AS FOR ANOTHER METHOD, A CM MAY BE INEVITABLY PLAYED AS A FIRST PLAYBACK TITLE.
READ IN BIND FILE (Binding File)
S291
FILE MAPPING PROCESSING
S292
SPECIFY TITLE TO ACTIVATE PLAYBACK (BY USER)
S293
S294
IS THERE CONTENT (CM) IN LOCAL STORAGE UNIT?
NO
YES
S295
PLAY CM TITLE ON DISC
PLAY CM TITLE ON LOCAL STORAGE UNIT
S296
NORMAL TITLE PLAYBACK
S297
END PLAYBACK

FIG. 17

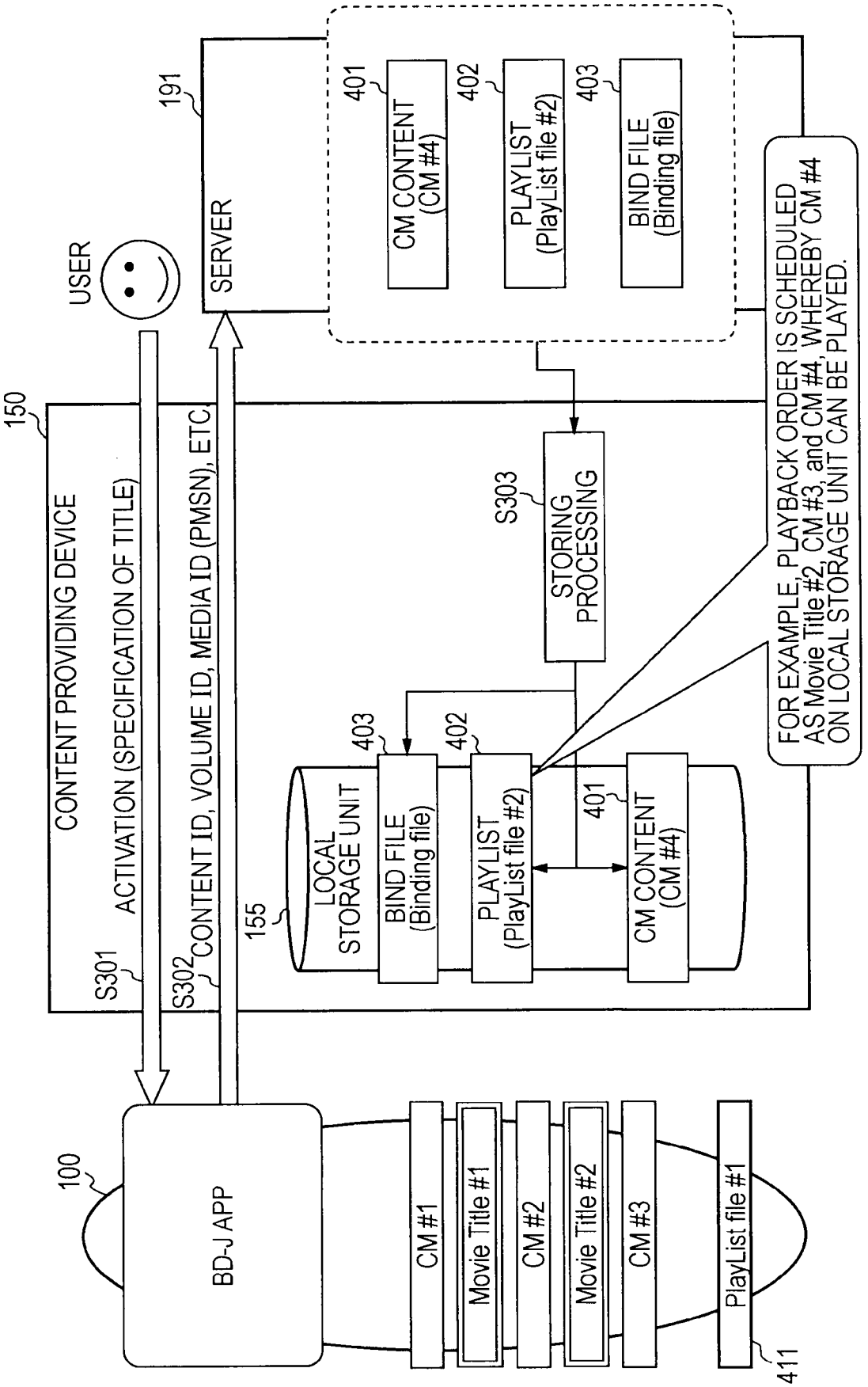
CONTENT PROVIDING DEVICE
150
ACTIVATION (SPECIFICATION OF TITLE)
S301
CONTENT ID, VOLUME ID, MEDIA ID (PMSN), ETC.
S302
USER
SERVER
191
CM CONTENT (CM #4)
401
PLAYLIST (PlayList file #2)
402
BIND FILE (Binding file)
403
STORING PROCESSING
S303
FOR EXAMPLE, PLAYBACK ORDER IS SCHEDULED AS Movie Title #2, CM #3, and CM #4, WHEREBY CM #4 ON LOCAL STORAGE UNIT CAN BE PLAYED.
LOCAL STORAGE UNIT
155
BIND FILE (Binding file)
403
PLAYLIST (PlayList file #2)
402
CM CONTENT (CM #4)
401
BD-J APP
100
CM #1
Movie Title #1
CM #2
Movie Title #2
CM #3
PlayList file #1
411

FIG. 18

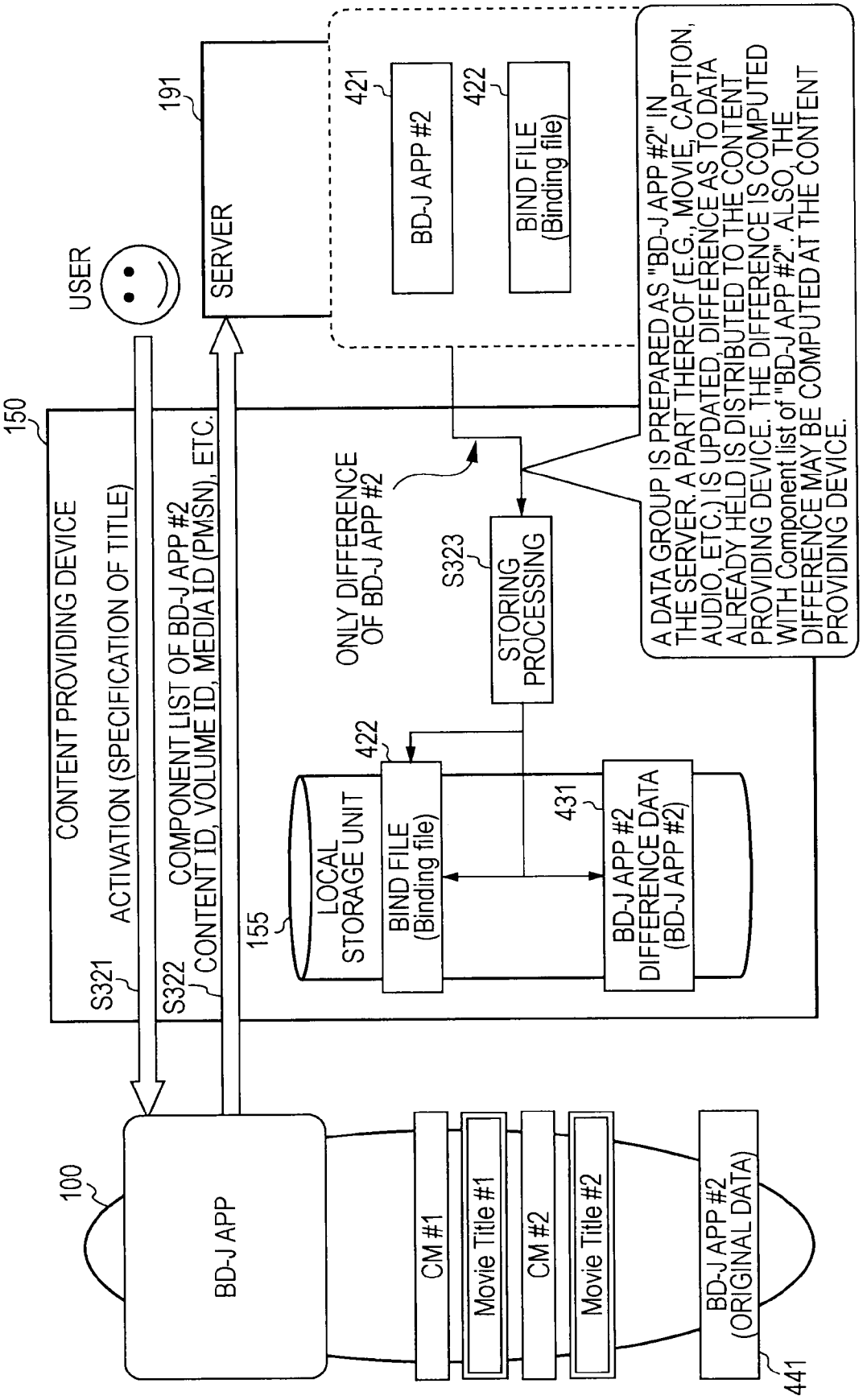
150
CONTENT PROVIDING DEVICE
S321
ACTIVATION (SPECIFICATION OF TITLE)
S322
COMPONENT LIST OF BD-J APP #2
CONTENT ID, VOLUME ID, MEDIA ID (PMSN), ETC.
USER
191
SERVER
421
BD-J APP #2
422
BIND FILE
(Binding file)
A DATA GROUP IS PREPARED AS "BD-J APP #2" IN THE SERVER. A PART THEREOF (E.G., MOVIE, CAPTION, AUDIO, ETC.) IS UPDATED, DIFFERENCE AS TO DATA ALREADY HELD IS DISTRIBUTED TO THE CONTENT PROVIDING DEVICE. THE DIFFERENCE IS COMPUTED WITH Component list of "BD-J APP #2". ALSO, THE DIFFERENCE MAY BE COMPUTED AT THE CONTENT PROVIDING DEVICE.
ONLY DIFFERENCE OF BD-J APP #2
S323
STORING PROCESSING
155
LOCAL STORAGE UNIT
422
BIND FILE
(Binding file)
431
BD-J APP #2
DIFFERENCE DATA
(BD-J APP #2)
100
BD-J APP
CM #1
Movie Title #1
CM #2
Movie Title #2
BD-J APP #2
(ORIGINAL DATA)
441

FIG. 19

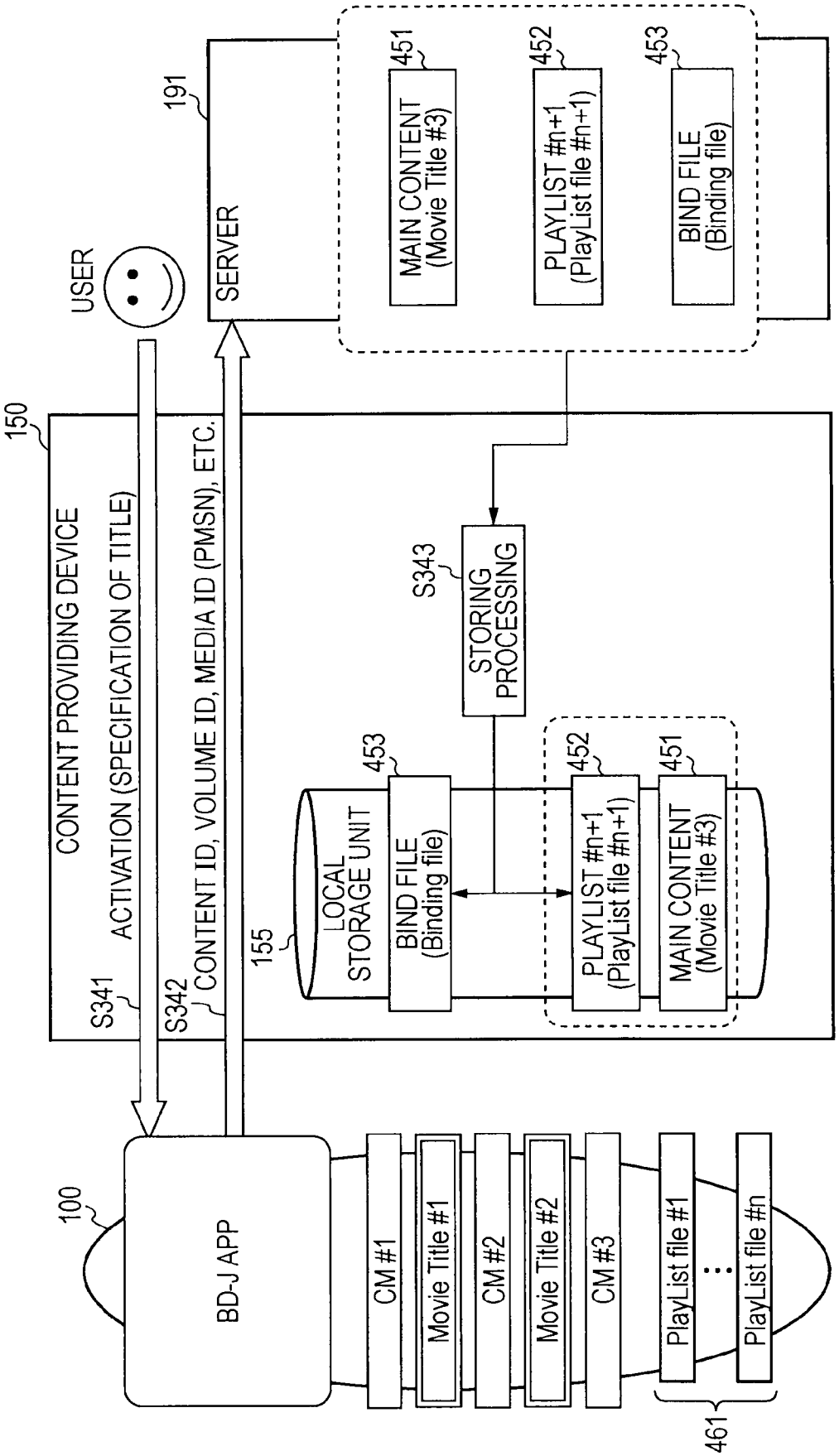
USER
SERVER
191
MAIN CONTENT (Movie Title #3)
451
PLAYLIST #n+1 (PlayList file #n+1)
452
BIND FILE (Binding file)
453
150
CONTENT PROVIDING DEVICE
ACTIVATION (SPECIFICATION OF TITLE)
S341
CONTENT ID, VOLUME ID, MEDIA ID (PMSN), ETC.
S342
S343
STORING PROCESSING
155
LOCAL STORAGE UNIT
BIND FILE (Binding file)
453
PLAYLIST #n+1 (PlayList file #n+1)
452
MAIN CONTENT (Movie Title #3)
451
100
BD-J APP
CM #1
Movie Title #1
CM #2
Movie Title #2
CM #3
PlayList file #1
PlayList file #n
461

FIG. 20

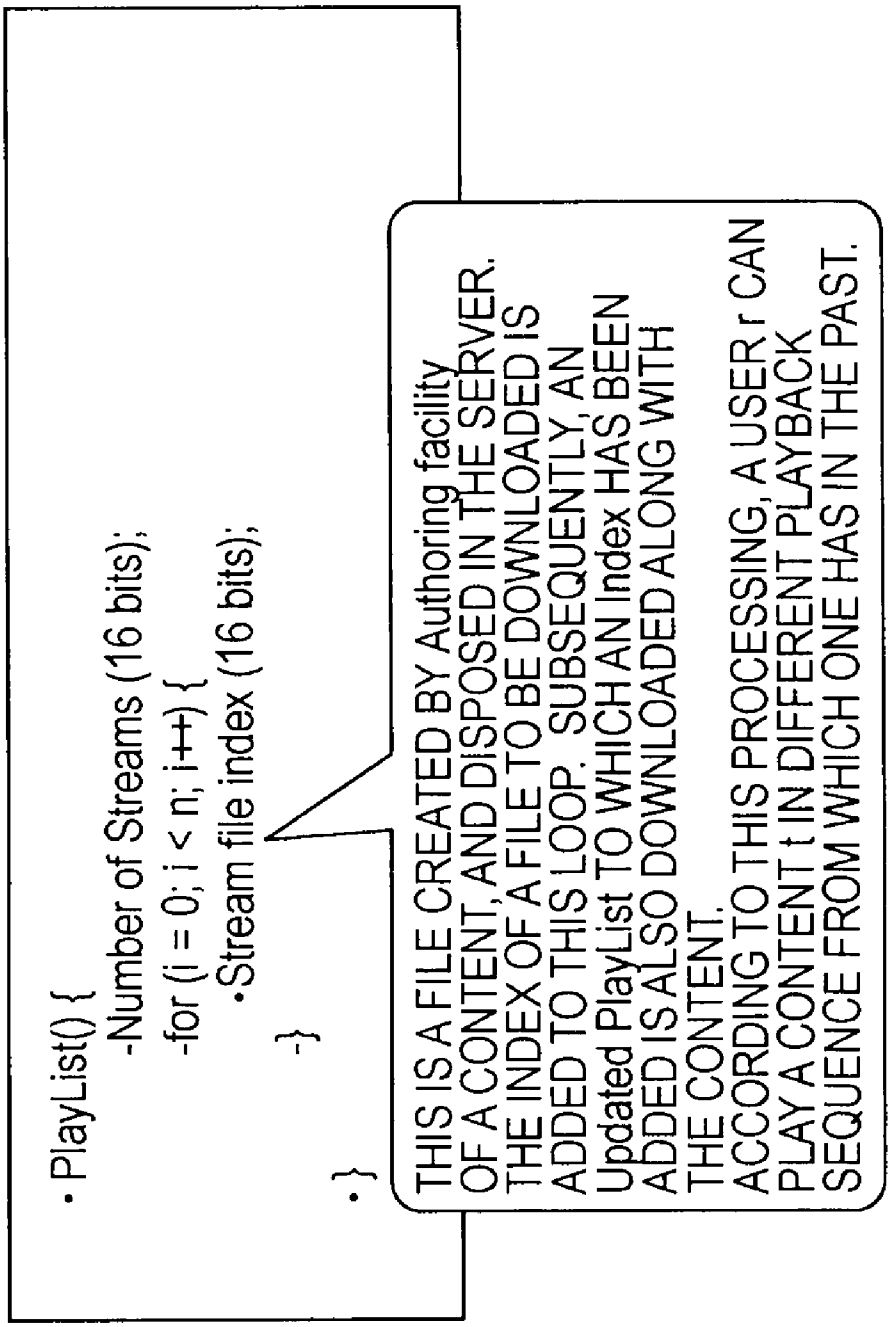
• PlayList() {
-Number of Streams (16 bits);
-for (i = 0; i < n; i++) {
•Stream file index (16 bits);
-}
•}
THIS IS A FILE CREATED BY Authoring facility OF A CONTENT, AND DISPOSED IN THE SERVER. THE INDEX OF A FILE TO BE DOWNLOADED IS ADDED TO THIS LOOP. SUBSEQUENTLY, AN Updated PlayList TO WHICH AN Index HAS BEEN ADDED IS ALSO DOWNLOADED ALONG WITH THE CONTENT. ACCORDING TO THIS PROCESSING, A USER r CAN PLAY A CONTENT t IN DIFFERENT PLAYBACK SEQUENCE FROM WHICH ONE HAS IN THE PAST.

FIG. 21

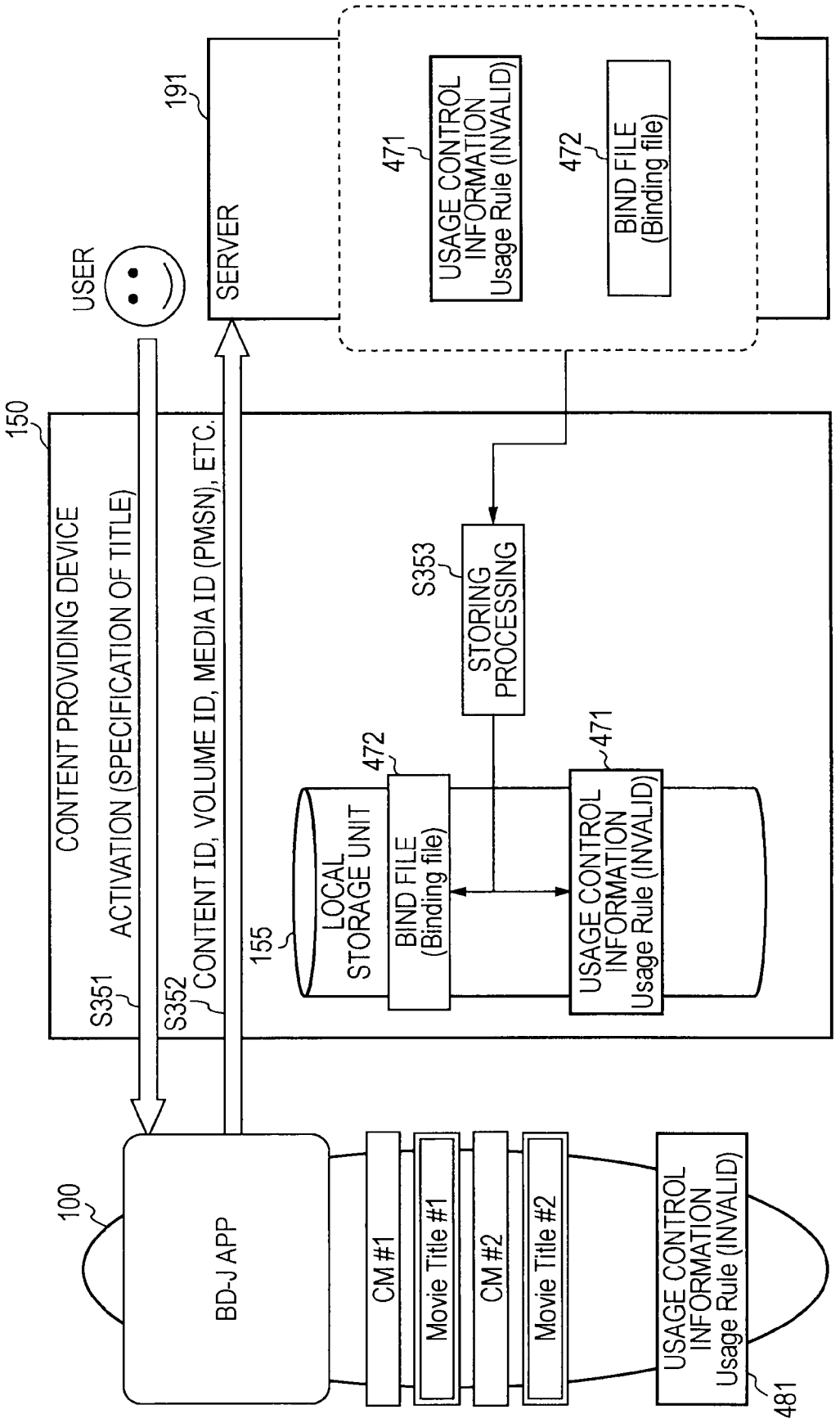
CONTENT PROVIDING DEVICE
150
ACTIVATION (SPECIFICATION OF TITLE)
CONTENT ID, VOLUME ID, MEDIA ID (PMSN), ETC.
S351
S352
USER
SERVER
191
USAGE CONTROL INFORMATION Usage Rule (INVALID)
471
BIND FILE (Binding file)
472
S353
STORING PROCESSING
LOCAL STORAGE UNIT
155
BIND FILE (Binding file)
472
USAGE CONTROL INFORMATION Usage Rule (INVALID)
471
100
BD-J APP
CM #1
Movie Title #1
CM #2
Movie Title #2
USAGE CONTROL INFORMATION Usage Rule (INVALID)
481

FIG. 22

USAGE CONTROL INFORMATION [Usage Rules (IN THE CASE OF Movie Title)]
EPN (FLAG REGARDING INTERNET RETRANSMISSION) EPN-unasserted: REFERENCED ONLY WHEN CCI IS Copy Control Not Asserted.
CCI (COPY CONTROL INFORMATION) Never Copy: INHIBITION OF COPYING
Image_Constraint_Token (INFORMATION REGARDING RESOLUTION RESTRICTION) High Definition Analog Output in High Definition Analog Form: NO RESOLUTION RESTRICTION
Digital_Only_Token (INFORMATION REGARDING ANALOG OUTPUT) Output of decrypted content is allowed for Analog/Digital Outputs: BOTH OF DIGITAL AND ANALOG CAN BE OUTPUT
APS (INFORMATION REGARDING PROTECTION OF CONTENT SUBJECTED TO ANALOG OUTPUT) APS1 on: type 1 (AGC): TYPE 1 of Macrovision
Type_of_Title (WHETHER TO BE A CONTENT WITH NETWORK CONNECTION AT THE TIME OF PLAYBACK) Basic Title: NETWORK CONNECTION IS UNCALLED

FIG. 23

USAGE CONTROL INFORMATION [Usage Rules (IN THE CASE OF CM)]
EPN (FLAG REGARDING INTERNET RETRANSMISSION) EPN-unasserted: ENCRYPTION IS UNCALLED
CCI (COPY CONTROL INFORMATION) Copy Control Not Asserted: NO COPY RESTRICTION, RECORDED AS PLAIN TEXT
Image_Constraint_Token (INFORMATION REGARDING RESOLUTION RESTRICTION) High Definition Analog Output in High Definition Analog Form: NO RESOLUTION RESTRICTION
Digital_Only_Token (INFORMATION REGARDING ANALOG OUTPUT) Output of decrypted content is allowed for Analog/Digital Outputs: BOTH OF DIGITAL AND ANALOG CAN BE OUTPUT
APS (INFORMATION REGARDING PROTECTION OF CONTENT SUBJECTED TO ANALOG OUTPUT) APS off: No ANALOG PROTECTION
Type_of_Title (WHETHER TO BE A CONTENT WITH NETWORK CONNECTION AT THE TIME OF PLAYBACK) Basic Title: NETWORK CONNECTION IS UNCALLED

FIG. 24

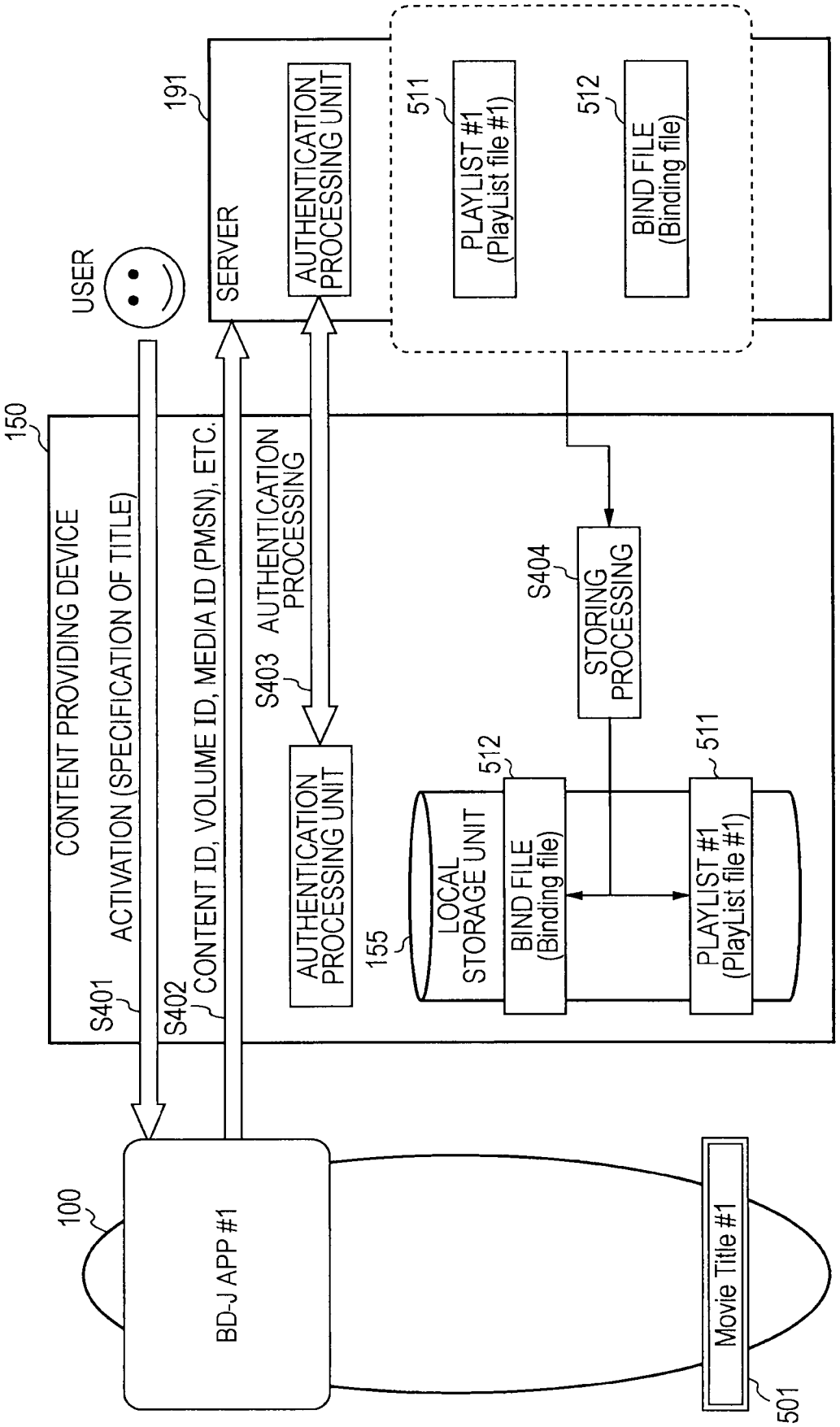
USER
SERVER
191
AUTHENTICATION PROCESSING UNIT
511
PLAYLIST #1 (PlayList file #1)
512
BIND FILE (Binding file)
150
CONTENT PROVIDING DEVICE
ACTIVATION (SPECIFICATION OF TITLE)
CONTENT ID, VOLUME ID, MEDIA ID (PMSN), ETC.
S401
S402
S403 AUTHENTICATION PROCESSING
AUTHENTICATION PROCESSING UNIT
S404
STORING PROCESSING
155
LOCAL STORAGE UNIT
512
BIND FILE (Binding file)
511
PLAYLIST #1 (PlayList file #1)
100
BD-J APP #1
Movie Title #1
501

FIG. 25

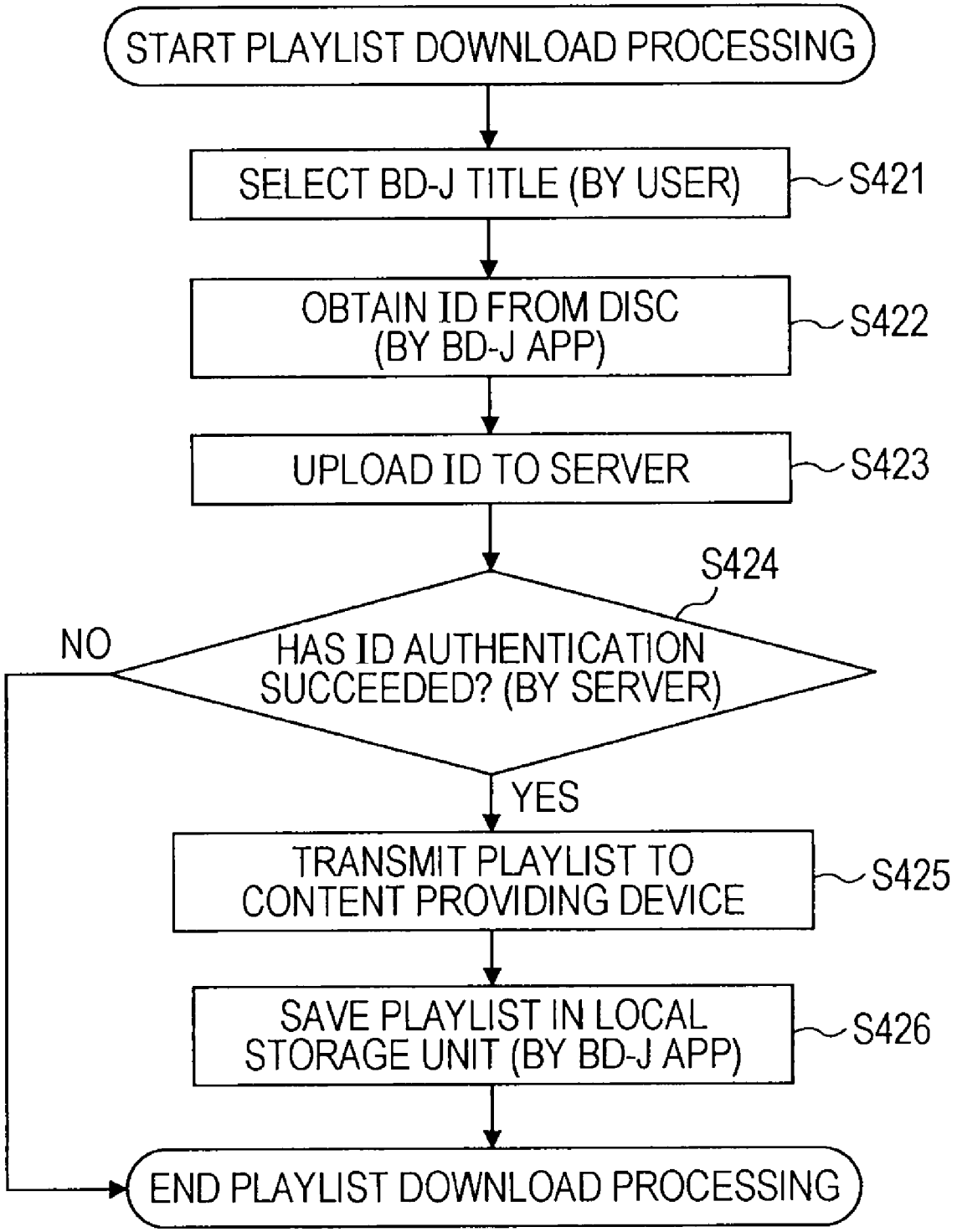
START PLAYLIST DOWNLOAD PROCESSING
SELECT BD-J TITLE (BY USER)
S421
OBTAIN ID FROM DISC (BY BD-J APP)
S422
UPLOAD ID TO SERVER
S423
S424
HAS ID AUTHENTICATION SUCCEEDED? (BY SERVER)
NO
YES
TRANSMIT PLAYLIST TO CONTENT PROVIDING DEVICE
S425
SAVE PLAYLIST IN LOCAL STORAGE UNIT (BY BD-J APP)
S426
END PLAYLIST DOWNLOAD PROCESSING

FIG. 26

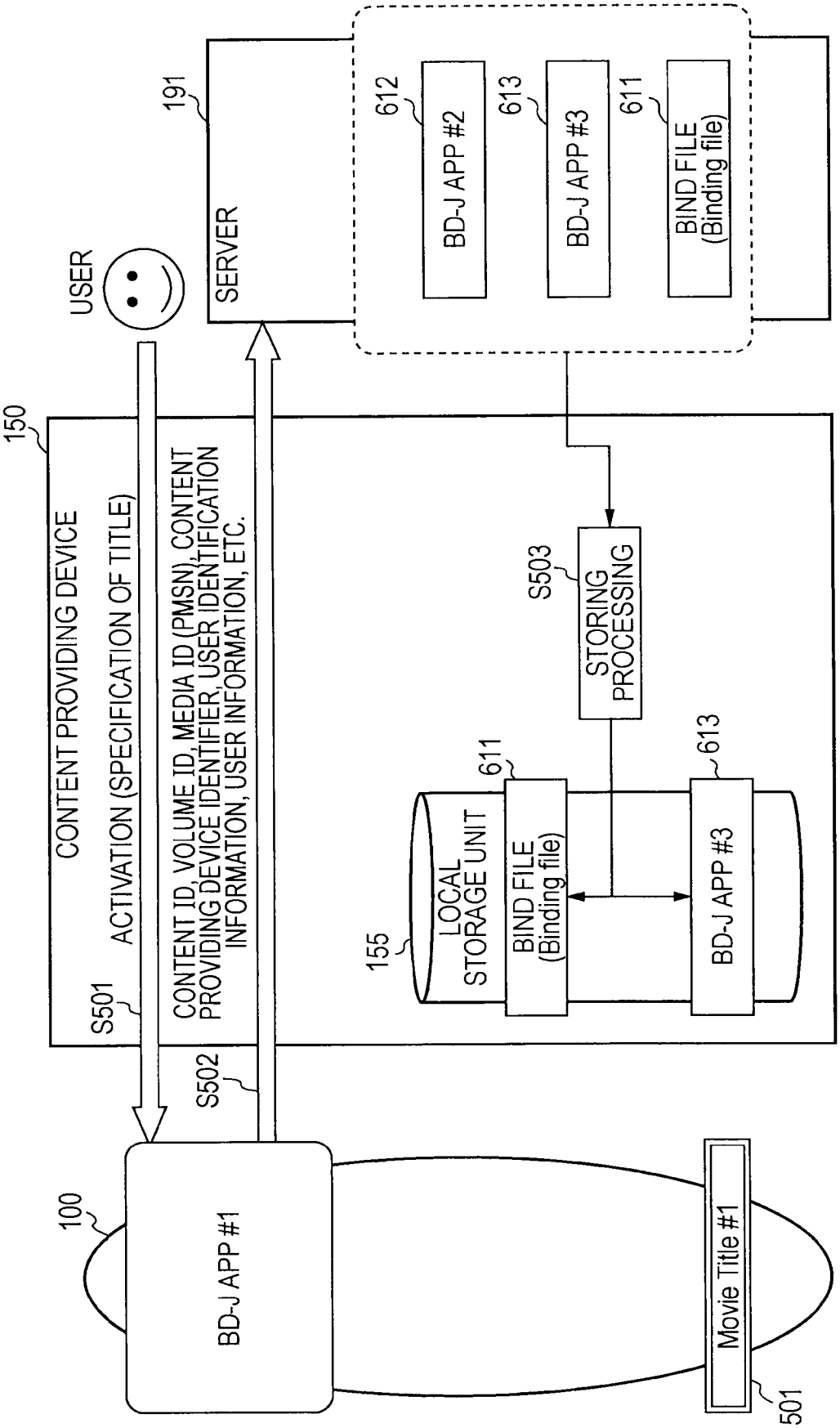
CONTENT PROVIDING DEVICE
150
S501
ACTIVATION (SPECIFICATION OF TITLE)
CONTENT ID, VOLUME ID, MEDIA ID (PMSN), CONTENT PROVIDING DEVICE IDENTIFIER, USER IDENTIFICATION INFORMATION, USER INFORMATION, ETC.
S502
USER
SERVER
191
612
BD-J APP #2
613
BD-J APP #3
611
BIND FILE (Binding file)
S503
STORING PROCESSING
155
LOCAL STORAGE UNIT
611
BIND FILE (Binding file)
613
BD-J APP #3
100
BD-J APP #1
Movie Title #1
501

FIG. 27

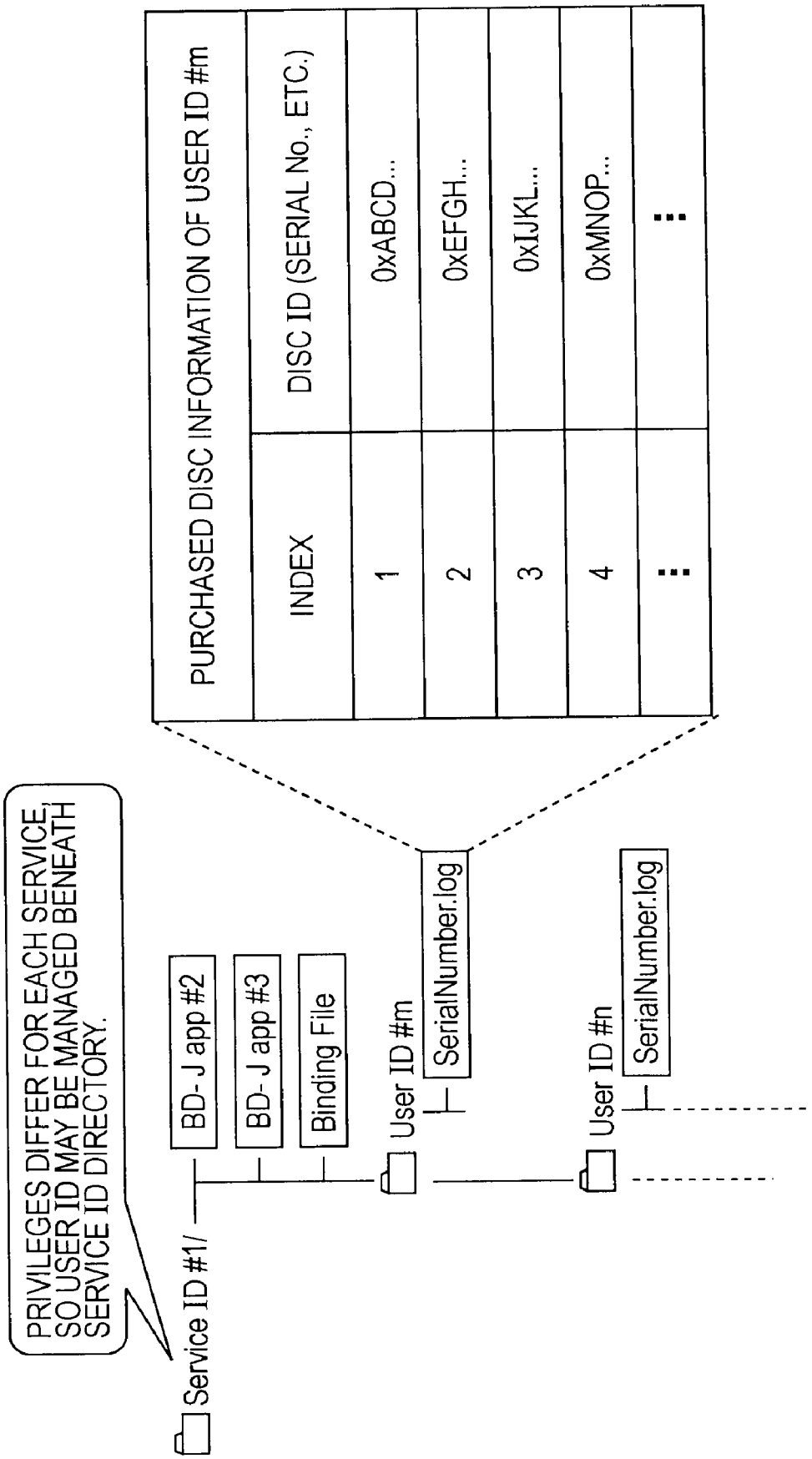
PRIVILEGES DIFFER FOR EACH SERVICE, SO USER ID MAY BE MANAGED BENEATH SERVICE ID DIRECTORY.
Service ID #1/
BD- J app #2
BD- J app #3
Binding File
User ID #m
SerialNumber.log
User ID #n
SerialNumber.log
PURCHASED DISC INFORMATION OF USER ID #m
INDEX
DISC ID (SERIAL No., ETC.)
1
0xABCD...
2
0xEFGH...
3
0xIJKL...
4
0xMNOP...

FIG. 28

PURCHASING USER INFORMATION OF DISC ID #m

INDEX	USER ID	USER PERSONAL INFORMATION	CONTENT PROVIDING DEVICE ID (DEVICE ID)
1	0xABCD...	.....	ABCD...
2	0xEFGH...	.....	0FGH...
3	0xIJKL...	.....	xIKL...
4	0xMNOP...	.....	0NOP...
...	...	...	...

FIG. 29

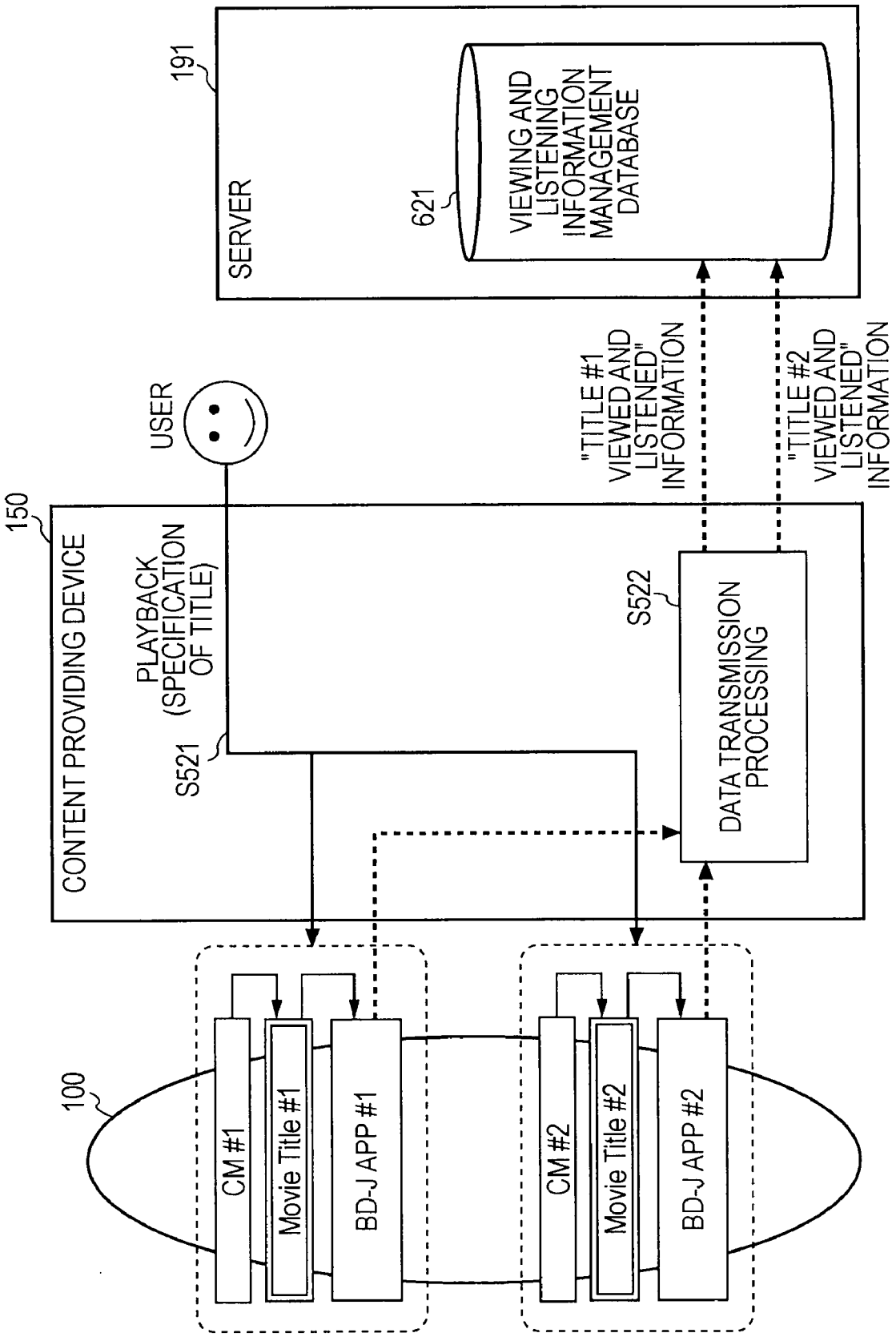
100
CM #1
Movie Title #1
BD-J APP #1
CM #2
Movie Title #2
BD-J APP #2
150
CONTENT PROVIDING DEVICE
PLAYBACK (SPECIFICATION OF TITLE)
S521
S522
DATA TRANSMISSION PROCESSING
USER
"TITLE #1 VIEWED AND LISTENED" INFORMATION
"TITLE #2 VIEWED AND LISTENED" INFORMATION
191
SERVER
621
VIEWING AND LISTENING INFORMATION MANAGEMENT DATABASE

FIG. 30

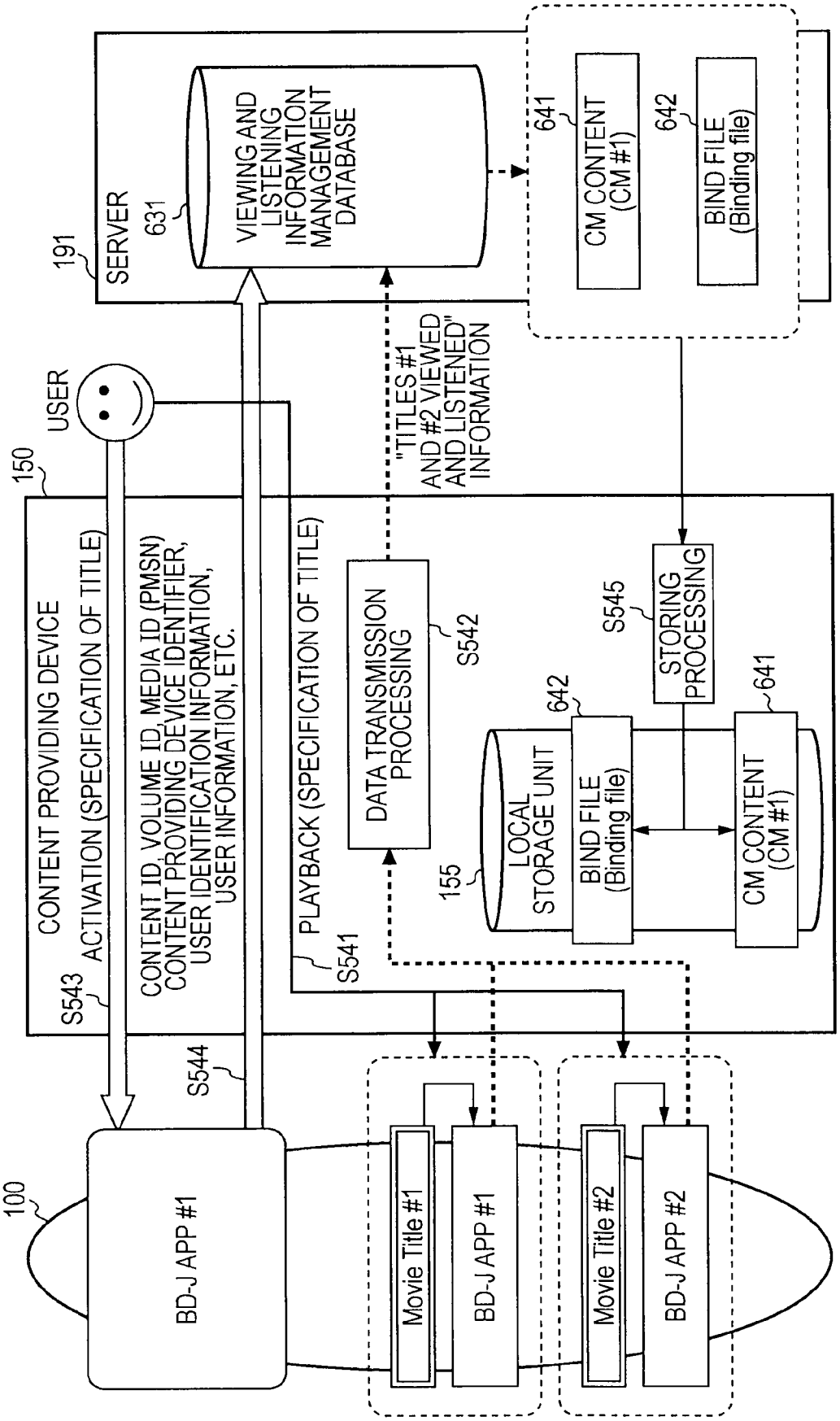
SERVER
191
631
VIEWING AND LISTENING INFORMATION MANAGEMENT DATABASE
641
CM CONTENT (CM #1)
642
BIND FILE (Binding file)
USER
150
"TITLES #1 AND #2 VIEWED AND LISTENED" INFORMATION
CONTENT PROVIDING DEVICE
ACTIVATION (SPECIFICATION OF TITLE)
S543
CONTENT ID, VOLUME ID, MEDIA ID (PMSN) CONTENT PROVIDING DEVICE IDENTIFIER, USER IDENTIFICATION INFORMATION, USER INFORMATION, ETC.
PLAYBACK (SPECIFICATION OF TITLE)
S541
DATA TRANSMISSION PROCESSING
S542
S545
STORING PROCESSING
642
641
155
LOCAL STORAGE UNIT
BIND FILE (Binding file)
CM CONTENT (CM #1)
S544
100
BD-J APP #1
Movie Title #1
BD-J APP #1
Movie Title #2
BD-J APP #2

FIG. 31

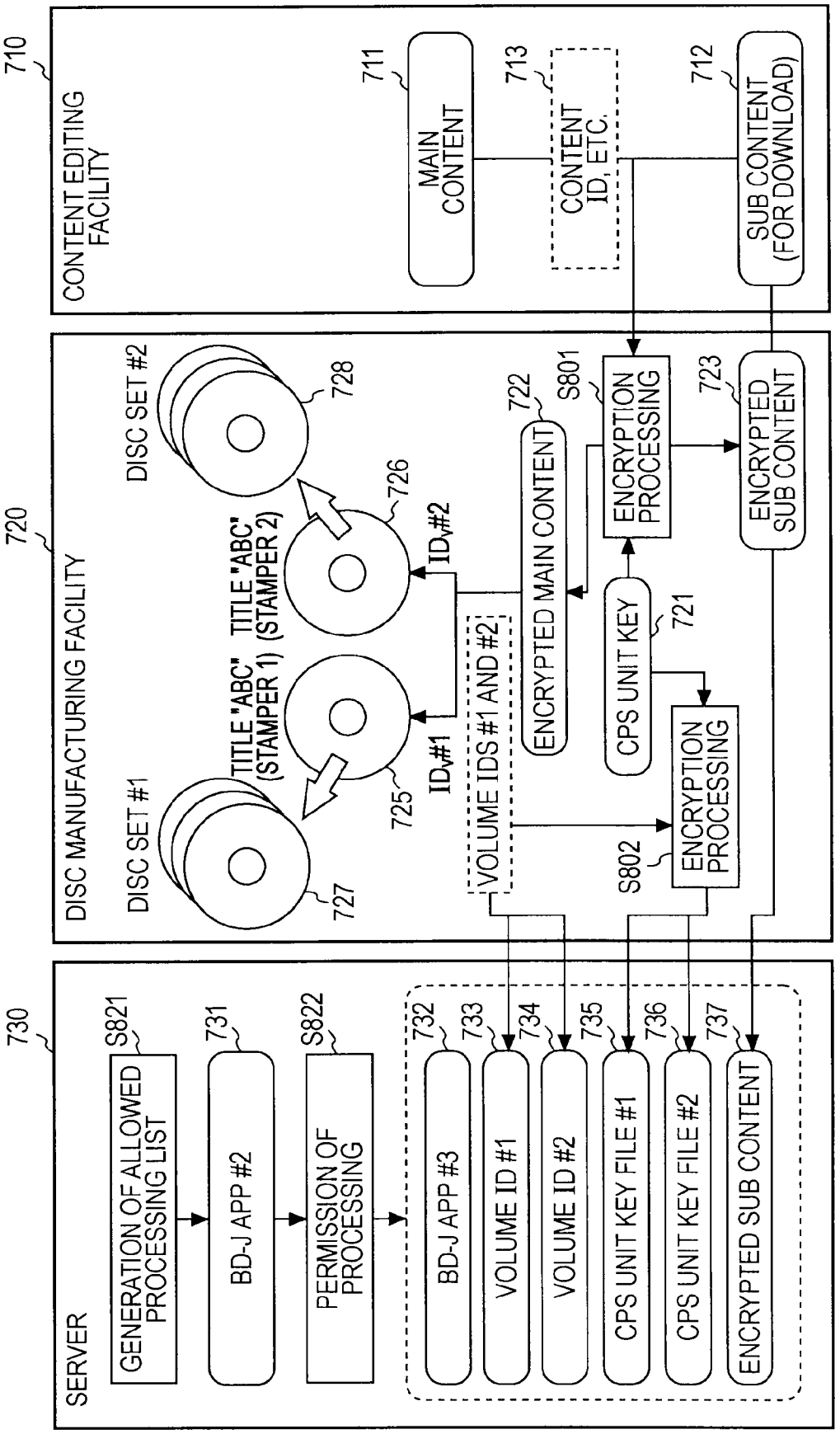
710
CONTENT EDITING FACILITY
711
MAIN CONTENT
713
CONTENT ID, ETC.
712
SUB CONTENT (FOR DOWNLOAD)
720
DISC MANUFACTURING FACILITY
DISC SET #2
728
DISC SET #1
727
TITLE "ABC" (STAMPER 2)
726
TITLE "ABC" (STAMPER 1)
725
ID#2
ID#1
VOLUME IDS #1 AND #2
722
ENCRYPTED MAIN CONTENT
S801
ENCRYPTION PROCESSING
723
ENCRYPTED SUB CONTENT
CPS UNIT KEY
721
S802
ENCRYPTION PROCESSING
730
SERVER
S821
GENERATION OF ALLOWED PROCESSING LIST
731
BD-J APP #2
S822
PERMISSION OF PROCESSING
732
BD-J APP #3
733
VOLUME ID #1
734
VOLUME ID #2
735
CPS UNIT KEY FILE #1
736
CPS UNIT KEY FILE #2
737
ENCRYPTED SUB CONTENT

FIG. 32

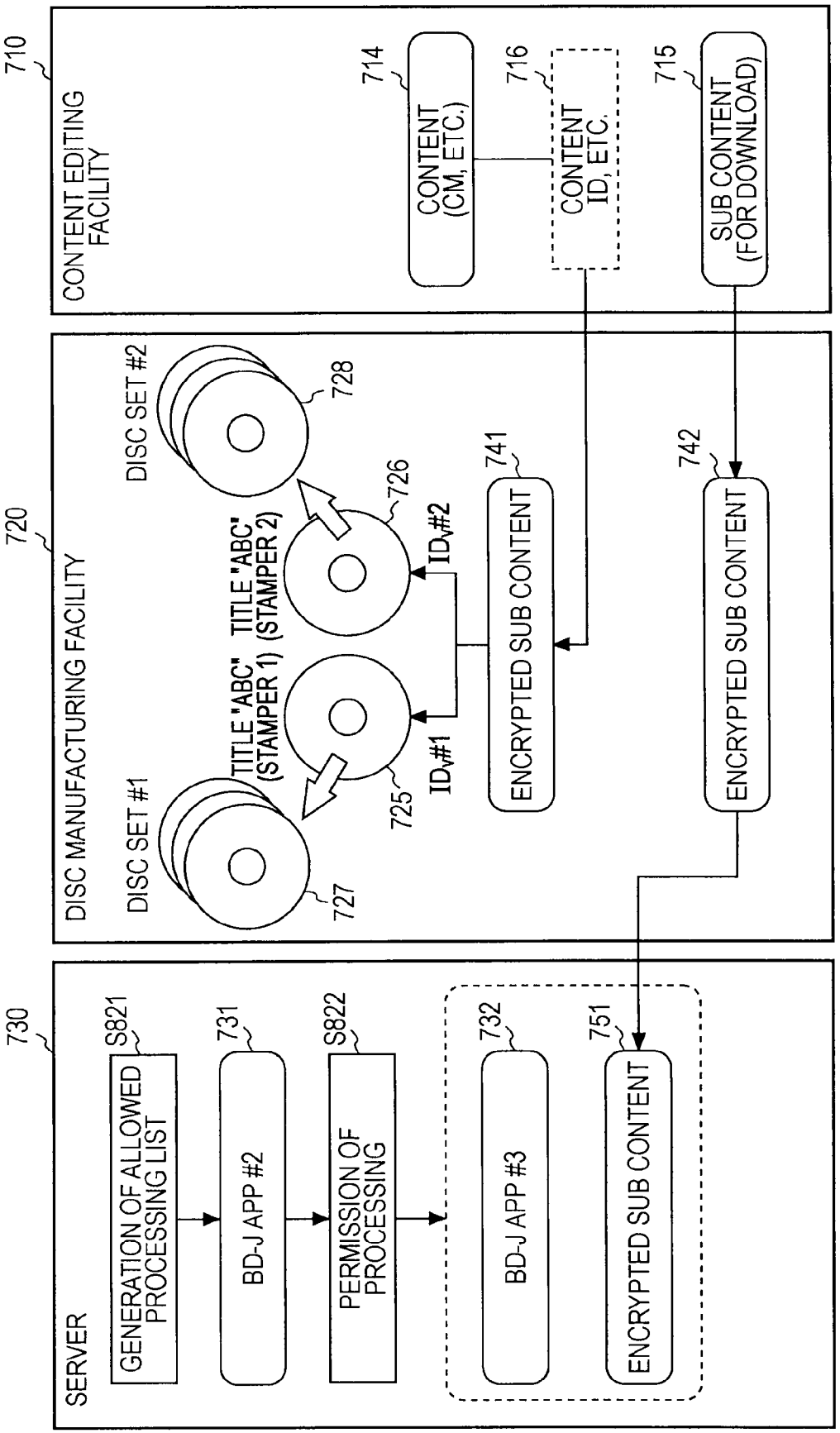
710
CONTENT EDITING FACILITY
714
CONTENT (CM, ETC.)
716
CONTENT ID, ETC.
715
SUB CONTENT (FOR DOWNLOAD)
720
DISC MANUFACTURING FACILITY
DISC SET #2
728
DISC SET #1
727
TITLE "ABC" (STAMPER 2)
726
TITLE "ABC" (STAMPER 1)
725
ID#2
ID#1
741
ENCRYPTED SUB CONTENT
742
ENCRYPTED SUB CONTENT
730
SERVER
S821
GENERATION OF ALLOWED PROCESSING LIST
731
BD-J APP #2
S822
PERMISSION OF PROCESSING
732
BD-J APP #3
751
ENCRYPTED SUB CONTENT

FIG. 33

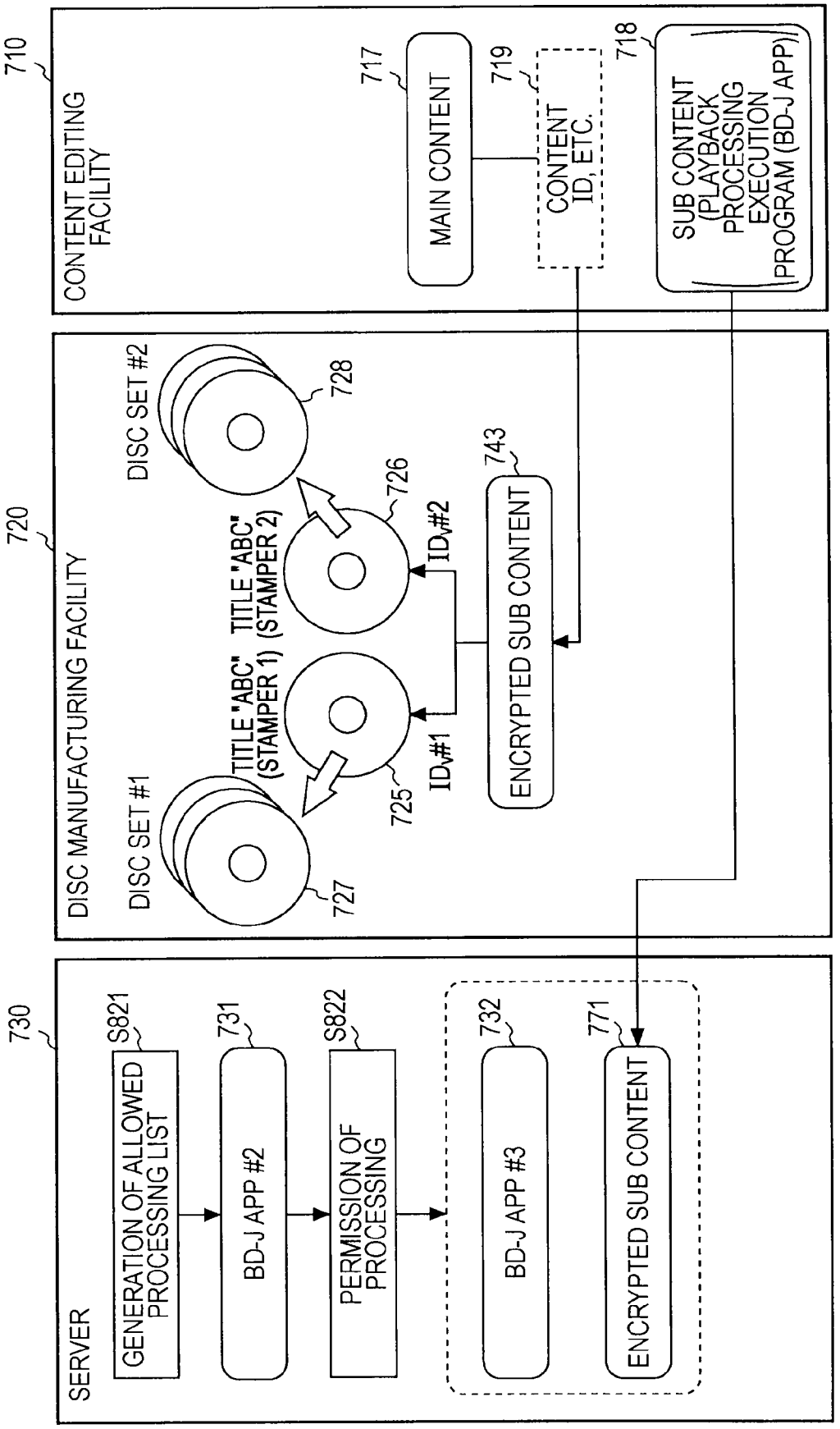
710
CONTENT EDITING FACILITY
717
MAIN CONTENT
719
CONTENT ID, ETC.
718
SUB CONTENT (PLAYBACK PROCESSING EXECUTION PROGRAM (BD-J APP))
720
DISC MANUFACTURING FACILITY
DISC SET #2
728
726
TITLE "ABC" (STAMPER 2)
ID#2
743
ENCRYPTED SUB CONTENT
DISC SET #1
TITLE "ABC" (STAMPER 1)
725
ID#1
727
730
SERVER
S821
GENERATION OF ALLOWED PROCESSING LIST
731
BD-J APP #2
S822
PERMISSION OF PROCESSING
732
BD-J APP #3
771
ENCRYPTED SUB CONTENT

CONTENT PROVIDING DEVICE, DATA PROCESSING METHOD, AND COMPUTER PROGRAM

CROSS REFERENCES TO RELATED APPLICATIONS

[0001] The present invention contains subject matter related to Japanese Patent Application JP 2007-261403 filed in the Japanese Patent Office on Oct. 4, 2007, the entire contents of which are incorporated herein by reference.

BACKGROUND OF THE INVENTION

[0002] 1. Field of the Invention

[0003] The present invention relates to a content providing device, data processing method, and computer program. More particularly, the present invention relates to a content providing device, data processing method, and computer program whereby content information and so forth employed by a client is obtained to manage client information, and a content is provided based on management information.

[0004] 2. Description of the Related Art

[0005] Various data, such as audio data such as music or the like, image data such as a movie or the like, game programs, various types of application programs, or the like (hereafter, referred to as content) is recorded in a recording medium, e.g., an information recording medium (disc), such as a Blu-ray Disc (registered trademark), DVD (Digital Versatile Disc), or the like, and this medium can be provided to a user. For example, a Blu-ray Disc (registered trademark) employing blue laser is a disc capable of recording with high density, and can record a mass picture content or the like as high-definition data, and is employed widely.

[0006] A content stored disc is provided to a user, and the user can employ various types of playback device such as a PC (Personal Computer), disc player, or the like to play and use a content.

[0007] A content is recorded in a disc in a format stipulated beforehand. In the case of playing the content recorded in a predetermined format, processing employing a playlist recorded in a disc as playback order information along with the content can be performed. The playlist is a list stipulating the playback order of contents. For example, in a case wherein

[0008] multiple movie contents **1**, **2**, **3**, and so on, and

[0009] multiple commercial contents a, b, c, and so on are recorded in a disc, a playlist stipulates the playback order of contents such as

[0010] movie content **1**→commercial a →movie content **2** →commercial b→movie content **3** →commercial c and so on, and the content playback order is determined, and playback processing is performed. Note that the number of playlists is not restricted to one, and a user can select and use a playlist from multiple playlists.

[0011] For example, in the case of a ROM disc wherein no new data recording can be performed, a disc stored content is basically fixed. Even immediately after the disc is provided to a user, the content of a playback content is not changed even after a certain period of time elapses. However, there is a case wherein a content such as a commercial or the like is preferably changed to the latest commercial or latest preview information, for example, after a certain period of time has elapsed since the disc was provided to the user. Also, even with a main content such as a movie content or the like, in a case wherein an update version such as corrected version, revised version, or the like has been created after the release of a disc, or the like, there is a case wherein the update version thereof is preferably provided to a user. Further, there is a case wherein data not stored in a disc when the disc was provided, is preferably provided to the disc possessing user as new additional data.

[0012] With regard to disc stored data, an arrangement has been disclosed in Japanese Patent No. 3772023 as the related art wherein data to be modified in a post-release manner and additional data and the like are provided to a user from a server through a network. Japanese Patent No. 3772023 has disclosed a content using system wherein a link image corresponding to a disc stored content is downloaded from a server to be stored in a storage unit such as a hard disk of a playback device, and the downloaded link image is played along with a disc recorded content. Such a system is employed, whereby a commercial of the latest version can be obtained from the server as the above-mentioned link image to subject this to playback processing.

[0013] However, the arrangement disclosed in Japanese Patent No. 3772023 is an arrangement wherein link information is recorded in a disc beforehand, and a downloaded content recorded in a hard disk is extracted and played in accordance with the link information, and is an arrangement wherein elapsed time since start of playback of a disc recorded content is measured at the time of playback to control playback timing, and playback of a disc content is stopped at predetermined set time to switch to playback of a downloaded content of the hard disk.

[0014] The arrangement disclosed in Japanese Patent No. 3772023 is an arrangement wherein with a certain content being provided from the server since release of a disc as a premise, link information is recorded in the disc under the premise thereof beforehand. Accordingly, it is not assumed that post-release data not scheduled at the time of release of a disc is provided to a user, and it is difficult to provide such data to the server in a post-release manner to play this instead of a disc stored content. Also, link information is recorded in the disc beforehand, which leads to a problem wherein post-release data is unavailable with a disc where link information is not recorded. Also, the playback device measures elapsed time since start of playback of a content, which leads to a problem wherein burden of the playback device becomes great.

[0015] Also, the server for executing content providing processing provides a content by receiving a content request from a user, but providing content in which the user is uninterested, for example, is meaningless.

SUMMARY OF THE INVENTION

[0016] There has been recognized a desire to provide a content providing device, data processing method, and computer program whereby content information and so forth employed by a client is obtained to manage client information, and a content is provided based on management information.

[0017] According to an embodiment of the present invention, a content providing device serving as a server for executing content providing processing as to a client, includes: a data processing unit for executing content providing processing in response to a content request from the client; with the data processing unit receiving a disc recorded identifier for identifying a disc or content recorded in the mounted disc of

the client, and the identification information of at least either the device identifier of a device on the client side, or the user identifier of a user on the client side, from the client, accumulating the history information of the disc recorded identifier received from the client in a management database in increments of devices or users, and analyzing the user's preference on the client side to provide a content adapted to the user's preference.

[0018] The data processing unit may provide the client with a bind file (Binding file) including mapping information between a disc recorded content recorded in the mounted disc of the client, and a local storage unit stored content provided to the client by the content providing device and stored in a local storage unit of the client; with the mapping information including information for obtaining a local storage unit stored content as a playback content to play this based on disc recorded content information recorded in a playlist at the time of content playback at the client.

[0019] The data processing unit may receive personal information from the client, accumulate the received personal information in the management database, and employ the personal information to select a provided content.

[0020] The data processing unit may provide a commercial content adapted to the user's preference to the client.

[0021] The data processing unit may provide the client with a commercial content adapted to the user's preference, and mapping information for playing the commercial content instead of a disc recorded commercial content recorded in the mounted disc of the client.

[0022] According to an embodiment of the present invention, a content providing system includes: a client for playing a disc stored content; and a server for executing content providing processing as to the client; with, at the time of playback of a content recorded in a disc, the client executing a program recorded in the disc, and transmitting to the server a disc recorded identifier for identifying a disc or content, and the identification information of at least either the device identifier of a device on the client side or the user identifier of a user on the client side, in accordance with the program; and with the server accumulating the history information of the disc recorded identifier received from the client in a management database in increments of devices or users, and analyzing the user's preference on the client side to provide a content adapted to the user's preference based on the accumulated information of the management database.

[0023] According to an embodiment of the present invention, a data processing method executed at a content providing device serving as a server for executing content providing processing as to a client, includes: a data processing step wherein a data processing unit executes content providing processing in response to a content request from the client; with the data processing step including the steps of receiving a disc recorded identifier for identifying a disc or content recorded in the mounted disc of the client, and the identification information of at least either the device identifier of a device on the client side or the user identifier of a user on the client side, and accumulating the history information of the disc recorded identifier received from the client in a management database in increments of devices or users, and analyzing the user's preference on the client side to provide a content adapted to the user's preference based on the accumulated information of the management database.

[0024] The data processing step may further include the step of: providing the client with a bind file (Binding file) including mapping information between a disc recorded content recorded in the mounted disc of the client, and a local storage unit stored content provided to the client by the content providing device and stored in a local storage unit of the client; with the mapping information including information for obtaining a local storage unit stored content as a playback content to play this based on disc recorded content information recorded in a playlist at the time of content playback at the client.

[0025] The data processing step may further include the step of: receiving personal information from the client, accumulating the received personal information in the management database, and employing the personal information to select a provided content.

[0026] The data processing step may further include the step of: providing a commercial content adapted to the user's preference to the client.

[0027] The data processing step may further include the step of: providing the client with a commercial content adapted to the user's preference, and mapping information for playing the commercial content instead of a disc recorded commercial content recorded in the mounted disc of the client.

[0028] According to an embodiment of the present invention, a computer program causing a content providing device serving as a server for executing content providing processing as to a client to execute data processing, includes: a data processing step wherein a data processing unit executes content providing processing in response to a content request from the client; with the data processing step including the steps of receiving a disc recorded identifier for identifying a disc or content recorded in the mounted disc of the client, and the identification information of at least either the device identifier of a device on the client side or the user identifier of a user on the client side, and accumulating the history information of the disc recorded identifier received from the client in a management database in increments of devices or users, and analyzing the user's preference on the client side to provide a content adapted to the user's preference based on the accumulated information of the management database.

[0029] Note that a computer program according to an embodiment of the present invention is a computer program which can be provided with a storage medium or communication medium to be provided to a general-purpose computer system which can execute various program code in a computer-readable format. Such a program is provided in a computer-readable format, thereby realizing processing corresponding to the program on the computer system.

[0030] Further objects, features, and advantages of the present invention will become apparent from more detailed description based on the later-described embodiments of the present invention and the attached drawings. Note that "system" employed in the present specification is a logical group configuration of multiple devices, and is not restricted to each component device being within the same housing.

[0031] According to the arrangement of an embodiment of the present invention, with a content providing device serving as a server which executes content providing processing as to a client, a disc recorded identifier for identifying a disc or content recorded in the mounted disc of the client, and the identification information of at least either the device identifier of a device on the client side or the user identifier of a user on the client side are received from the client, the history information of the received disc recorded identifier is accu-

mulated in a management database in increments of devices or users, and the preference of the user on the client side is analyzed based on the accumulated information to provide a content adapted to the user's preference. According to the present arrangement, for example, content which interests a user, or a commercial, can be selectively provided to the user.

BRIEF DESCRIPTION OF THE DRAWINGS

[0032] FIG. **1** is a diagram for describing the stored data structure of an information recording medium, and the configuration and processing of a content providing device for executing playback processing;

[0033] FIG. **2** is a diagram for describing a setting example of a content management unit for setting to a stored content of an information recording medium;

[0034] FIG. **3** is a diagram for describing the configuration of a CPS unit key file;

[0035] FIG. **4** is a syntax diagram for describing the configuration of a CPS unit key file;

[0036] FIG. **5** is a diagram for describing a content playback processing sequence of the content providing device;

[0037] FIG. **6** is a diagram for describing content download processing of the content providing device;

[0038] FIG. **7** is a diagram for describing a content obtaining processing sequence wherein the content providing device obtains a content from a server;

[0039] FIG. **8** is a diagram illustrating a flowchart for describing a content download processing sequence from the server;

[0040] FIG. **9** is a diagram illustrating a flowchart for describing a content playback sequence employing a disc stored content and local storage unit stored content with the content providing device;

[0041] FIG. **10** is a diagram for describing a specific example of a bind file (Binding file);

[0042] FIG. **11** is a diagram for describing a content playback processing example employing no bind file (Binding file);

[0043] FIG. **12** is a diagram for describing a content playback processing example employing a bind file (Binding file);

[0044] FIG. **13** is a diagram illustrating a flowchart for describing the building sequence of a virtual file system (VFS);

[0045] FIG. **14** is a diagram for describing processing for automatically playing a commercial content;

[0046] FIG. **15** is a diagram illustrating a flowchart for describing a processing sequence for automatically downloading the latest content from the server;

[0047] FIG. **16** is a diagram illustrating a flowchart for describing a content automatic playback processing sequence;

[0048] FIG. **17** is a diagram for describing a download processing example of a commercial content;

[0049] FIG. **18** is a diagram for describing a download processing example of a program content;

[0050] FIG. **19** is a diagram for describing a download processing example of a main content, for example, such as an AV stream which is a movie content, or the like;

[0051] FIG. **20** is a diagram for describing an example of a playlist file transmitted by the server;

[0052] FIG. **21** is a diagram for describing a download processing example of usage control information (Usage Rule);

[0053] FIG. **22** is a diagram for describing usage control information (Usage Rule) corresponding to a main content (Movie Title) such as a movie or the like;

[0054] FIG. **23** is a diagram for describing an example of usage control information (Usage Rule) corresponding to a commercial content;

[0055] FIG. **24** is a diagram for describing a processing example wherein the content providing device obtains a playlist #**1** (PlayList file #**1**) employed for playback of a main content (Movie Title #**1**) from the server.

[0056] FIG. **25** is a diagram illustrating a flowchart for describing a download processing sequence of a playlist;

[0057] FIG. **26** is a diagram for describing processing for accessing the server to download a content;

[0058] FIG. **27** is a diagram for describing a specific example of user management by the server;

[0059] FIG. **28** is a diagram for describing a specific example of user management by the server;

[0060] FIG. **29** is a diagram for describing a processing example wherein the server is notified of a user playing a disc stored content, and the server analyzes the notification information to select a provided content;

[0061] FIG. **30** is a diagram for describing a processing example wherein the server is notified of a user playing a disc stored content, and the server analyzes the notification information to select a provided content;

[0062] FIG. **31** is a diagram for describing the details of the generation, management, and providing processing as to a user of a disc stored content and a content for download, in a case wherein a download content is an encrypted content;

[0063] FIG. **32** is a diagram for describing the details of the generation, management, and providing processing as to a user of a disc stored content and a content for download, in a case wherein a download content is an unencrypted content; and

[0064] FIG. **33** is a diagram for describing the details of the generation, management, and providing processing as to a user of a disc stored content and a content for download, in a case wherein a download content is a program content.

DESCRIPTION OF THE PREFERRED EMBODIMENTS

[0065] Description will be made below regarding the details of a content providing device, content providing system, data processing method, and computer program according an embodiment of the present invention with reference to the diagrams. Description will be made in accordance with the following items.

[0066] 1. Stored Data of Information Recording Medium, and Overview of Content Providing Device

[0067] 2. Content Download Processing by Content Providing Device

[0068] 3. Content Playback Processing

[0069] 4. Automatic Download and Automatic Playback Processing of Content

[0070] 5. Details of Download Processing According to Content Type

[0071] 6. Download Providing Processing Configuration of Playlist as to Playlist Unrecorded Disc

[0072] 7. User Management Processing by Server

[0073] 8. Creation and Management Processing of Disc Stored Content and Download Content

[0074] 1. Stored Data of Information Recording Medium, and Overview of Content Providing Device

[0075] First, description will be made regarding a stored data example of an information recording medium employed for content playback with a content providing device according to the present invention, and an embodiment of the content providing device. FIG. **1** illustrates a configuration example of an information recording medium **100** storing a content, and a content providing device (playback device) **150**. Here, an information storing example of a ROM disc serving as a content stored disc will be shown. The content providing device **150** is various types of content providing device, for example, such as a PC, playback dedicated device, or the like, and includes a drive **120** for executing data reading processing from the information recording medium **100**.

[0076] Examples of a ROM disc serving as the information recording medium (disc) **100** include an information recording medium such as a Blu-ray Disc (registered trademark), DVD, or the like, and an information recording medium storing a legal content manufactured in a disc manufacturing factory under permission of a legal content right holder.

[0077] As shown in FIG. **1**, the information recording medium (disc) stores contents **111**, an MKB (Media Key Block) **112** serving as an encrypted key block generated based on a tree-structure key distribution method available as one mode of a broadcast encryption method, a processing control file **113** including a content ID serving as the identifier of a stored content of the information recording medium **100**, a volume ID set as identification information for recording-medium individual or for each information recording medium in increments of a predetermined number of discs, a processing control file **113** including PMSN (Pre-recorded Media Serial Number) and the like equivalent to a media ID serving as disc-specific identification information, usage control information (Usage Rule) **114** including CCI (Copy Control Information) and the like serving as copying/playback control information of a content, and a CPS unit key file **115** storing a CPS unit key which is an encryption key set for each content management unit (CPS unit) serving as a content usage management increment.

[0078] Note that the present example shows an example wherein a content management application (BD-J app **1**) **116** is included as program information to be applied to later-described content download processing. A processing example employing the content management application (BD-J app **1**) **116** will be described later. Now, overview of information to be stored in the information recording medium **100** will be described below.

[0079] (1) Contents **111**

[0080] Various contents are stored in the information recording medium (disc) **100**. Examples of these contents include an AV (Audio Visual) stream of a moving image content such as an HD (High Definition) movie content or the like which is a high-definition moving image data, game program, image file, audio data, text data, and Java (registered trademark) application program.

[0081] Of these contents, for example, a movie content, which is a main content, is particular AV format standard data, and is recorded as encrypted data in accordance with the AACS (Advanced Access Content System) standard which is content copyright protection technology standard. That is to say, contents are classified into units (CPS units), and each of the units is recorded in a disc as an encrypted content to which a unit key (CPS unit key) corresponding to each unit has been applied. A CPS unit key file **115** storing a unit key used for content decryption, and an MKB (Media Key Block) **112** which is an encrypted key block are recorded in the disc.

[0082] Further, for example, a Java (registered trademark) application program, game program, image file, audio data, text data, and so forth are stored in the contents **111** as sub contents. Some sub contents are data not following a particular AV data format in some cases.

[0083] The types of contents include various contents such as music data, image data such as a moving image, still image, or the like, game program, web content, and so forth along with a main content and sub content, and these contents include various modes of information such as content information which can be used only with data from the information recording medium **100**, content information which can be used with a combination between data from the information recording medium **100** and data provided from the server connected to a network, and so forth.

[0084] (2) MKB

[0085] The MKB (Media Key Block) **112** is an encrypted key block generated based on a tree-structured key distribution method available as one mode of a broadcast encryption method. The MKB **112** is a key information block whereby a media key (Km) which is a key used for content decryption can be obtained only by processing (decryption) based on a device key (Kd) stored in the content providing device of a user possessing a valid license. This is a method to which an information distribution method following a so-called hierarchical tree structure has been applied, and only a user device (content providing device) possessing a valid license enables obtaining of a media key (Km), and an invalidated (revoked) user device disables obtaining of a media key (Km).

[0086] A control center for controlling an MKB changes a device key employed for encryption of key information to be stored in an MKB, whereby an MKB having a structure can be generated wherein it is difficult to perform decryption using a device key stored in a particular user device, i.e., it is difficult to obtain a media key used for content decryption. Accordingly, an encrypted content which can be decrypted can be provided to only a device having a valid license while revoking an unauthorized device at arbitrary timing. The details of content decryption processing will be described later.

[0087] (3) Processing Control File

[0088] The processing control file **113** includes a content ID serving as the identifier of a stored content of the information recording medium **100**, a volume ID set as identification information for recording-medium individual or for each information recording medium in increments of a predetermined number of discs, PMSN (Pre-recorded Media Serial Number) equivalent to a media ID serving as disc-specific identification information, and so forth. The volume ID is employed as key generation information to be applied to content decryption. Such processing will be described later.

[0089] (4) Usage Control Information (Usage Rule)

[0090] The usage control information (Usage Rule) **114** includes, for example, copying/playback control information (CCI). That is to say, this is copying restriction information for usage control corresponding to the encrypted contents **111** stored in the information recording medium **100**, and playback restriction information. This copying/playback control information (CCI) can be set variously, such as a case wherein this information is set as CPS unit individual information to be set as a content management unit, a case wherein this information is set so as to correspond to multiple CPS units, or the like.

[0091] (5) CPS Unit Key File

[0092] The encrypted contents stored in the information recording medium **100** are, as described above, classified into CPS units set as content management units, and are encrypted by an encryption key in increments of units. The content providing device which executes playback processing distinguishes the CPS unit to which a content to be played belongs, and the content providing device performs decryption processing by employing a CPS unit key as an encryption key corresponding to the distinguished CPS unit. A file storing data for obtaining this CPS unit key is a CPS unit key file. Note that content playback employs not only a CPS unit key but also other various key information, key generation information, and so forth. Specific processing regarding these will be described later.

[0093] FIG. **1** illustrates a simple overview of the configuration of the content providing device **150** which executes playback processing of a content stored in the information recording medium **100**. The content providing device **150** includes a drive **120** which executes reading processing of stored data of an information recording medium. The data read by the drive **120** is input to a data processing unit **151** which executes decryption processing and decoding (e.g., MPEG decoding) processing of an encrypted content.

[0094] The data processing unit **151** includes a decryption processing unit **152** which executes decryption processing of an encrypted content, and a decoding processing unit **153** which executes decoding (e.g., MPEG decoding) processing. The decryption processing unit **152** employs various types of information stored in memory **154**, and the data read from the information recording medium **100** to generate a key employed for content decryption, thereby executing decryption processing of the encrypted contents **111**.

[0095] The memory **154** is memory made up of ROM and RAM employed as a program execution area, data storing area, and so forth, and stores a device key [Kd] employed for content decryption processing, a program which executes various processing, and so forth. When decrypting an encrypted content of the information recording medium **100**, the content providing device **150** generates a key employed for content decryption based on the data stored in the memory **154**, and the data read from the information recording medium **100**, and executes decryption processing of the encrypted content included in the contents **111**. The details of the decryption processing will be described later.

[0096] Next, description will be made with reference to FIG. **2** regarding a format example of an encrypted content included in the contents **111** stored in the information recording medium. As described above, encrypted contents to be stored in the information recording medium are assigned with a different key for each unit to realize different usage control for each unit, and are subjected to decryption processing, and are stored in the information recording medium. That is to say, the contents are classified into content management units (CPS units), subjected to individual encryption processing, and subjected to individual usage management.

[0097] When using a content, first, the CPS unit key assigned to each unit is obtained, and further data processing is executed based on a predetermined decryption processing sequence by employing other indispensable keys, key generation information, and so forth to perform playback of the content. Description will be made regarding the setting mode of content management units (CPS units) with reference to FIG. **2**.

[0098] As shown in FIG. **2**, contents include a hierarchical structure of (A) index **210**, (B) movie object **220**, (C) playlist **230**, and (D) clip **240**. Upon specifying an index such as a title or the like to be accessed by a playback application, for example, a playback program correlated with the title is specified, and a playlist stipulating the playback sequence and so forth of contents is selected in accordance with the program information of the specified playback program.

[0099] A playlist includes play items serving as playback target data information. According to clip information serving as a playback section specified with a play item included in a playlist, an AV stream or command serving as content actual data is selectively read out, thereby performing playback of the AV stream or execution processing of the command. Note that there are a great number of playlists and play items, each of which is correlated with a playlist ID and play item ID serving as identification information, respectively.

[0100] Note that the format shown in FIG. **2** is an encrypted content format in accordance with the AACS standard, but it not all of the contents **111** stored in the disc have to be data in accordance with this format. Various contents other than encoded data recorded in accordance with this format may be recorded in a disc, such as a commercial (i.e., advertisement) content, service content, Java (registered trademark) program content, and so forth. There is a case wherein such data is recorded in a disc as an unencrypted content, and a playlist may be employed for playback of such a content.

[0101] That is to say, all of the settings of the playlists shown in FIG. **2** illustrate examples of playlists specifying playback of only an AV stream serving as encrypted data, but other than these, a playlist stipulating the playback sequence for alternately playing AV streams in accordance with the AACS standard and commercial contents which are unencrypted data, a playlist for playing one commercial which is unencrypted data, or the like may be set. Note that, in the case of a user playing a content, playback is performed by specifying a title, but specifically, one playlist is selected by the user specifying a title, and one or multiple playback contents are selected with the selected playlist sequentially, thereby performing playback.

[0102] FIG. **2** illustrates two CPS units of encrypted contents included in the contents **111** recorded in the disc **100**. These make up a part of contents stored in the information recording medium. A CPS unit **1** (**271**) and CPS unit **2** (**272**) are each CPS units set as a unit including a title serving as an index, a movie object serving as a playback program file, a playlist, and a clip including an AV stream file serving as content actual data.

[0103] The content management unit (CPS unit) **1** (**271**) includes a title **1** (**211**), a title **2** (**212**), playback programs **221** and **222**, playlists **231** and **232**, and clips **241** and **242**, AV stream data files **261** and **262** which are content actual data included in the two clips **241** and **242** are at least data to be encrypted, and essentially are set as data encrypted by employing a CPS unit key (Ku**1**) which is an encryption key set in a correlated manner with the content management unit (CPS unit) **1** (**271**).

[0104] The content management unit (CPS unit) **2** (**272**) includes an application **1** (**213**), a playback program **224**, a playlist **233**, and a clip **243**, and an AV stream data file **263** which is content actual data included in the clip **243** is encrypted by employing a CPS unit key (Ku**2**) which is an encryption key set in a correlated manner with the content management unit (CPS unit) **2** (**272**).

[0105] For example, in order for the user to execute an application file or content playback processing corresponding to the content management unit **1** (**271**), the user should obtain the unit key (Ku**1**) serving as an encryption key set in a correlated manner with the content management unit (CPS unit) **1** (**271**). In order to execute an application file or content playback processing corresponding to the content management unit **2** (**272**), the user should obtain the unit key (Ku**2**) serving as an encryption key set in a correlated manner with the content management unit (CPS unit) **2** (**272**).

[0106] The specific structure of a CPS unit key file will be described with reference to FIGS. **3** and **4**. FIG. **3** shows the structure of a CPS unit key file as a table, and FIG. **4** is a syntax diagram showing an actual file data structure. As shown in FIG. **3**, CPS unit key files are classified for each piece of index information such as titles, thereby providing a data structure with which the content management unit number (CPS unit number) and encrypted CPS unit key [Kun] corresponding to each index are correlated.

[0107] The content providing device **150** which executes content playback obtains the corresponding CPS unit key based on the unit number (CPS unit number) set to each CPS unit to execute decryption processing of the CPS unit which is an encrypted content. FIG. **4** is a syntax diagram showing the data structure corresponding to the CPS unit key file shown in FIG. **3**.

[0108] Next, description will be made regarding the playback processing sequence of an encrypted content with the content providing device **150** with reference to FIG. **5**. The encrypted content is an encrypted content obtained by being subjected to encryption in increments of CPS units as described above.

[0109] The content providing device **150** reads various types of information from the disc **100**, and executes decoding processing of the encrypted content based on the unit key (Ku) generated by key generation processing employing the read data and a device key **281** possessed by the content providing device **150**.

[0110] First, the content providing device **150** reads out the device key (Kd) **281** stored in the memory. The device key **281** is a secret key stored in a content providing device which received a license relating to content usage.

[0111] Next, in step S**11**, the content providing device **150** executes decryption processing of the MKB **112** stored in the disc **100** by employing the device key **281** to obtain the media key Km. The media key Km is encrypted and stored in the MKB **112**.

[0112] Next, in step S**12**, the content providing device **150** generates a title key generation key Ke (embedded Key) using encryption processing based on the media key Km obtained by the MKB processing in step S**11**, and a volume ID (e.g., recorded in the processing control file **113**) read from the disc **100**. This key generation processing is executed as processing, for example, in accordance with the AES encryption algorithm.

[0113] Next, in step S**13**, the content providing device **150** executes unit key data processing such as encryption processing (AES_H) or the like based on encrypted CPS unit key [Kun] obtained from the title key generation key Ke (embedded Key) and the CPS unit key file **115** (see FIGS. **3** and **4**) read from the disc **100** to obtain a title key Kt.

[0114] Next, in step S**14**, the content providing device **150** generates a unit key Ku using encryption processing (AES_H) based on the title key Kt, and the usage control information **114** read from the disc **100**, and in step S**15**, subjects the encrypted content read from the disc **100** to decryption processing (e.g., AES_D) employing the unit key.

[0115] Next, in step S**16**, the content providing device **150** executes indispensable decoding processing, for example, such as MPEG decoding, decompression, descrambling, or the like, to obtain a content **282**. The decryption and playback processing sequence of the encrypted content has thus ended.

[0116] 2. Content Download Processing by Content Providing Device

[0117] The content providing device can perform not only playback of a content recorded in a disc but also playback processing by obtaining a content (download content), for example, from a server connected thereto through a network, and employing both of this download content and an information recording medium stored content.

[0118] Description will be made regarding an external content obtaining processing configuration with reference to FIG. **6**. The content providing device **150** shown in FIG. **6** is the same device as the content providing device **150** shown in FIG. **1**. In FIG. **1**, the data processing unit **151**, memory **154**, and drive **120** are illustrated as the configuration employed for playback of a content from the information recording medium, but the content providing device **150** further includes, for example, a local storage unit **155** made up of a hard disk or flash memory or the like, a communication interface **156** for executing communication through a network, and a display unit **157** for displaying a content and content information, and further providing a UI function serving as a user input unit.

[0119] The content providing device **150** obtains a sub content which is available along with playback of a content stored in the disc **100**, for example, such as caption data or dubbed-in data, commercial content, service content, program such as Java (registered trademark) or the like, and additionally, service data corresponding to the content stored in the disc **100**, and so forth through servers **191** and **192** in a case wherein the content stored in the disc **100** is a movie content, and stores the obtained data, for example, in the local storage unit **155** made up of a hard disk, memory, or the like. When recording post-release data, the data processing unit **151** generates or updates the management table in which management information relating to the post-release data has been stored to record this in the local storage unit **155**.

[0120] The post-release data to be stored in the local storage unit **155** is data obtained or generated corresponding to any of the stored content of the disc **100**, and is stored in the local storage unit **155** at the time of playback processing of the stored content of the disc **100**, and playback of the post-release data selected by the user can be executed along therewith. With this playback processing, under the control of the data processing unit **151**, a VFS (Virtual File System) in which a disc stored content and a local storage unit stored content such as a hard disk are integrated is built, thereby performing playback processing. According to this playback processing based on this VFS, the same playback can be performed as playback processing as it were from one medium.

[0121] It is indispensable to obtain a content from the server before the content playback processing employing a disc stored content and a local storage unit stored content is performed. An example of this content obtaining processing will be described with reference to FIG. **7**. The content obtaining processing may be performed with various processing modes.

The example shown in FIG. **7** is a processing example thereof, and is a processing example wherein three content management applications are combined and employed, thereby obtaining a content.

[0122] With the processing example shown in FIG. **7**, the following three content management applications are employed.

[0123] (1) First content management application (BD-J app **1**) **301** recorded in the disc **100**

[0124] (2) Second content management application (BD-J app **2**) **331** (=**322**) provided to the content providing device **150** from the server **191**

[0125] (3) Third content management application (BD-J app **3**) **332** (=**323**) provided to the content providing device **150** from the server **191**

[0126] Note that [BD-J app n] represents a Java (registered trademark) application to be applied to a Blu-ray Disc (registered trademark) which is a recording/playback disc employing blue laser. With the following embodiment, an example employing a Java (registered trademark) application to be applied to a Blu-ray Disc (registered trademark) as a content management application will be described, but the present invention may be employed with an information recording medium other than a Blu-ray Disc (registered trademark), and also a program employed as a content management application may be a program other than a Java (registered trademark) program.

[0127] First, description will be made regarding processing executed by these three content management applications.

[0128] (1) First Content Management Application (BD-J app **1**)

[0129] This first content management application (BD-J app **1**) is an application to be executed before connection with the server, and executes the following processing.

[0130] (a) Processing for confirming whether to execute download with a user

[0131] (b) Processing for confirming whether the playback device (content providing device) can handle network connection and AACS online functions

[0132] (c) Processing for providing a URL to be accessed

[0133] (d) Update processing of management data (org_id, disc_id) of the local storage unit, and data relating to AACS

[0134] (e) Accounting processing (optional)

[0135] (2) Second Content Management Application (BD-J app **2**)

[0136] This second content management application (BD-J app **2**) is an application obtained from the server and executed, and executes the following processing.

[0137] (a) Processing for allowing a user to select a product (download data)

[0138] (b) Processing for informing the server of the product selected by a user

[0139] (c) Accounting processing (optional)

[0140] (3) Third Content Management Application (BD-J app **3**)

[0141] This third content management application (BD-J app **3**) is an application obtained from the server and executed, and is executed at the time of recording download data in the local storage unit, and executes the following processing.

[0142] (a) Processing for recording an AV-related file (content to be played) in the local storage unit in a state usable with a virtual file system (VFS) for setting a disc stored content and local storage unit stored content as one virtual media stored content

[0143] (b) Processing for recording an AACS-related file (management file) in the local storage unit in a state usable with a VFS

[0144] Thus, the processing of each application is specialized, and an arrangement is employed wherein each application is obtained from a disc or the server as appropriate, whereby flexibility such as application update processing or the like increases, a more ease-to-use environment and advanced service can be provided.

[0145] Note that these respective content management applications (BD-J app n) are executed with the data processing unit **151** of the content providing device **150**, i.e., a data processing unit including a CPU or the like having a program executing function, and perform the above-mentioned processing. For example, these applications are executed with a VM (Virtual Machine) which the data processing unit **151** of the content providing device **150** sets as a program execution area.

[0146] The processing sequence of the present processing example will be described with reference to FIG. **7**. First, the content management application (BD-J app **1**) **321** (=**301**) recorded in the disc (ROM disc) **100** is activated. Note that the activation processing of the content management application (BD-J app **1**) **321**(=**301**) is performed with title selection in the same way as with the content playback processing. As for the user side processing, title specification processing similar to the case of playing a movie content activates the content management application (BD-J app **1**) **321** (=**301**).

[0147] According to the content management application (BD-J app **1**) **321** activated with title selection by the user, in step S**101** the content providing device **150** obtains, for example, a processing control file **302** of the disc **100**, reads a content ID, volume ID, and PMSN which is a serial number equivalent to a media ID, and transmits the disc recording IDs thereof, and identification information of at least one of a user ID and content providing device ID to the server **191** for performing content (download content) providing processing. Note that what kind of identification information is transmitted to the server **191** can be set by the server **191** side arbitrarily. For example, the content management application (BD-J app **1**) **321** (=**301**) is set as an application wherein the transmission sequence of the identification information used for the server **191** side is set as a program.

[0148] In step S**102**, the server **191** generates an allowed processing list, which is a list of processing which the user (content providing device **150**) is allowed to perform, based on the identification information included in the received data, e.g., a content ID or user ID, selects the content management application (BD-J app **2**) **331** to provide this to the content providing device **150**. The server **191** holds, for example, content usage condition information corresponding to a content ID or user ID, and selects the content management application (BD-J app **2**) **331** which executes processing corresponding to the content ID or user ID based on that information to provide this to the content providing device **150**.

[0149] The content providing device **150** executes processing to which the content management application (BD-J app **2**) **322** (=**331**) received from the server **191** has been applied. The content providing device **150** displays the allowed processing included in the content management application

(BD-J app **2**) **322** on the display unit of the content providing device, and in step S**103**, the user performs, for example, selection of a download content.

[0150] Based on this selection the content providing device **150** executes settlement processing by transferring settlement data **330** to the server **191**. The content providing device **150** displays a settlement screen on the display unit of the content providing device, and the user inputs data used for settlement, such as a credit card and so forth, on the settlement screen, and the content providing device **150** transmits this to the server **191**. Next, in step S**104**, the server **191** allows processing to transmit permission information to the content providing device **150**.

[0151] In step S**104**, the server **191** transmits data including a content **334**, management data **333**, and bind file (Binding file) **335** to be provided to the content providing device **150**, and content management application (BD-J app **3**) **332** for executing recording processing to the content providing device **150**. Note that it is desirable to provide an arrangement for appending the signature of the server **191** to those data to enable tampering verification.

[0152] The content providing device **150** performs signature verification at the time of execution of the content management application (BD-J app **3**) **323** (=**332**) received from the server **191**, and performs processing for confirming that the received data is valid data without tampering. As a condition that validity has been confirmed, in step S**105**, the content providing device **150** records the content **334**, management data **333**, and bind file (Binding file) **335** in the local storage unit **155**. As a result of this, the management data **341**, content **342**, and bind file (Binding file) **343** are recorded in the local storage unit **155**.

[0153] Note that the management data (AACS data) **341** (=**333**) is management data which the AACS (Advanced Access Content System) stipulates which is a specification management system relating to content copyright protection art, and in a case wherein the content **334** provided by the server **191** is an encrypted content, the management data **341** (=**333**) includes a CPS unit key storing a key (CPS unit key) to be applied to decryption thereof, and is further made up of data including usage control information corresponding to a provided content, an MKB (Media Key Block) which is an encryption key block storing a media key for obtaining a CPS unit key, and so forth.

[0154] The bind file (Binding file) **343**(=335), which is a file provided to the content providing device **150** by the server **191**, is a file storing mapping information used for building of a virtual file system (VFS) which the content providing device **150** builds at the time of playing the content **342** (=**334**) stored in the local storage unit **155** of the content providing device **150** along with the stored content of the information recording medium (disc) **100**. The mapping information is information which allows a user to obtain a local storage unit stored content using disc recorded content information recorded in a playlist as a playback content.

[0155] Employing the mapping information recorded in the bind file (Binding file) **343** (=**335**) enables a part of a disc stored content to be replaced with a download content recorded in the local storage unit **155** to play the download content, for example, at the time of employing a playlist recorded in the disc **100** to perform playback of a content.

[0156] Specifically, for example, in a case wherein the following contents are recorded in a disc

[0157] multiple movie contents **1**, **2**, **3**, and so on,

[0158] multiple commercial contents a, b, c, and so on, and a playlist stipulates the following playback order of

[0159] movie content **1** →commercial a→movie content **2** →commercial b→movie content **3** →commercial c, and so on, processing for replacing the commercials a, b, and c with download contents downloaded from the server **191** and recorded in the local storage unit **155** to play the download contents, and processing for playing a new additional content downloaded from the server **191**, can be performed.

[0160] That is to say, in a case wherein the following contents are recorded in the local storage unit **155** as download contents downloaded from the server **191** and recorded in the local storage unit **155**

[0161] commercial x,

[0162] commercial y, and

[0163] commercial z,

a virtual file system (VFS) is built by employing the mapping information recorded in the bind file (Binding file) **343** (=**335**), and playback is performed by employing the same playlist, playback processing can be performed by replacing as follows:

[0164] movie content **1** →commercial x→movie content **2** →commercial y→movie content **3** →next provided content preview information→commercial z, and so on.

[0165] Note that a specific example and usage example of a bind file (Binding file) will be described later in detail.

[0166] Description will be made with reference to the flowchart shown in FIG. **8** regarding the content download processing sequence from the server described with reference to FIG. **7**.

[0167] First, in step S**121**, a title is selected, which is for specifying an application program (BD-J) for downloading a content. This processing is executed by the a user employing the content providing device **150**.

[0168] Next, in step S**122**, an application program (BD-J app **1**) read from the disc **100** is executed by a user's specification. As described above, as for processing on the user side, the content management application (BD-J app **1**) is activated by the same title specification processing as in the case of playing a movie content. The application (BD-J app **1**) is executed at a VM (Virtual Machine) set as a program execution area in the content providing device **150**.

[0169] Next, in step S**123**, the application (BD-J app **1**) obtains, for example, a processing control file of the disc **100**, and obtains a content ID, volume ID, and PMSN which is a serial number equivalent to a media ID, and uploads (transmits) these to the server **191** for performing providing processing such as a sub content or the like. Note that, as described above, a transmission identifier may be set variously, such as one of these disc recorded identifiers, user identifier, content providing device identifier, or a combination of these, or the like. This processing is executed in accordance with the application program (BD-J app **1**).

[0170] Next, in step S**124**, the allowed processing list included in the content management application (BD-J app **2**) is displayed on the display unit of the content providing device as processing to which the content management application (BD-J app **2**) received from the server **191**, and in step S**125**, the user selects a download content.

[0171] Next, in step S**126**, the content management application (BD-J app **2**) determines whether the content selected by the user is a pay content or free content, and in the case of a pay content, the processing proceeds to step **127**, where the content management application (BD-J app **2**) executes

settlement processing by transferring of settlement data **331** to/from the server **191**. The content management application (BD-J app **2**) displays a settlement screen on the display unit of the content providing device, the user inputs data used for settlement of a credit card or the like in the settlement screen, and the content management application (BD-J app **2**) transmits this to the server **191**.

[0172] In a case wherein such settlement processing has ended, or a case wherein the content selected by the user is a free content, the processing proceeds to step S**128**, where the content providing device **150** executes the content management application (BD-J app **3**) received from the server **191**, and records a content, management data, and bind file (Binding file) in the local storage unit **155**. Downloading of the content has been completed by the above processing.

[0173] 3. Content Playback Processing

[0174] Next, description will be made with reference to the flowchart shown in FIG. **9** regarding content playback processing executed by the content providing device **150**, i.e., processing sequence for playing a stored content of the disc **100** and a download content stored in the local storage unit **155**.

[0175] The flow shown in FIG. **9** is executed under the control of the data processing unit **151** of the content providing device **150**.

[0176] First, in step S**141**, the data processing unit **151** builds a virtual file system by employing a bind file (Binding file) obtained from the server and stored in the local storage unit **155**. A virtual file system (VFS) is a virtual file system which is set such that multiple storage contents of different storage portions are integrated, thereby enabling the same playback as that of playback processing as if from one medium.

[0177] With the present example, a VFS is built wherein a stored content of the disc **100** and a stored content of the local storage unit **155** are integrated. A bind file (Binding file) obtained from the server and stored in the local storage unit **155** is employed at the time of building this VFS.

[0178] A specific example of a bind file (Binding file) will be described with reference to FIG. **10**. As shown in FIG. **10**, a bind file (Binding file) is set as the corresponding data of the following data.

[0179] (a) The file name of a content entity (download content), and

[0180] (b) A playback specified content file name on a playlist

[0181] (a) The file name of a content entity (download content) is the file name of a download content which the content providing device **150** obtains by download processing from the server **191** and stored in the local storage unit **155**.

[0182] (b) A playback specified content file name on a playlist is the file name of a playback content recorded in a playlist employed in the case of performing playback of a content. This file name corresponds to the file name of a content recorded in the disc **100**.

[0183] Content playback processing is performed by sequentially selecting contents described in the playlist selected with the title specified by the user.

[0184] In a case wherein a playback specified content file name recorded in a playlist is recorded as "(b) a playback specified content file name on a playlist" of a bind file (Binding file), the virtual file system (VFS) is set so as to select "(a) the file name of a content entity (download content)" recorded in a manner corresponding to "(b) the playback specified content file name on a playlist" thereof as a playback content. That is to say, the virtual file system (VFS) is built as a file system holding mapping information.

[0185] In a case wherein the VFS is searched with a disc stored file name recorded in a playlist as a search key, the content providing device **150** employs a virtual file system (VFS) including mapping information, thereby obtaining a file name (download content) of the local storage unit based on the mapping information as search result, and accordingly, the file of the local storage unit can be obtained and played.

[0186] In a case wherein a playback specified content file name recorded in a playlist is not recorded as "(b) a playback specified content file name on a playlist" of a bind file (Binding file), the virtual file system (VFS) is set such that the playback specified content file name recorded in the playlist is set as is as a playback content. This content is a content recorded in the disc **100**.

[0187] Thus, the mapping information of a bind file (Binding file) is mapping information for performing playback of a download content instead of playback of a content recorded in the disc. The data processing unit **151** of the content providing device **150** performs VFS building processing employing a bind file (Binding file) at the time of building a virtual file system (VFS) in step S**141** in the flow shown in FIG. **9**, thereby building a virtual file system (VFS) including mapping information.

[0188] Next, in step S**142**, the user performs input of specification information of a playback content, i.e., selection of a title. A title is employed as information for selecting a certain playlist. Next, in step S**143**, the data processing unit **151** of the content providing device **150** executes selection of the playback content based on the content name described in the playlist selected in accordance with the specified title. This selection of the playback content is performed based on the virtual file system (VFS) built in step S**141**. That is to say, this VFS is a VFS built by employing a bind file (Binding file), and the content of which the mapping information is recorded in the bind file is obtained not from the disc but from the local storage unit.

[0189] In step S**144**, the data processing unit **151** of the content providing device **150** determines whether or not the obtained content is an encrypted content, and in the case of the encrypted content, in step S**145**, executes content decryption processing. This processing is processing previously described with reference to FIG. **5**. After completion of decryption of the content, or in a case wherein the obtained content is an unencrypted content, the processing proceeds to step S**146** without decrypting the content, where the content is played.

[0190] Thus, the data processing unit **151** of the content providing device **150** executes content obtaining processing employing the mapping information for obtaining a local storage stored content as a playback content employing disc recorded content information recorded in the playlist, thereby playing the local storage unit stored content instead of the disc recorded content specified with the playlist.

[0191] With the content providing device according to an embodiment of the present invention, in a case wherein a content name which is recorded in a playlist as a content to be played is recorded as "(b) a playback specified content file name on a playlist" of a bind file (Binding file), an arrangement is made wherein "(a) the file name of a content entity (download content)" recorded in a manner corresponding to

"(b) the playback specified content file name on a playlist" thereof is selected as a playback content to play this. Accordingly, for example, as described above, in a case wherein the following contents are recorded in a disc

[0192] multiple movie contents **1**, **2**, **3**, and so on,

[0193] multiple commercial contents a, b, c, and so on, and a playlist stipulates the following playback order of

[0194] movie content **1** →commercial a→movie content **2** →commercial b→movie content **3** →commercial c, and so on, playback wherein the commercials a, b, and c are replaced with download contents downloaded from the server **191** and recorded in the local storage unit **155**, i.e.,

[0195] commercial x,

[0196] commercial y, and

[0197] commercial z,

playback processing can be performed by replacing the contents as follows:

[0198] movie content **1** →commercial x→movie content **2** →commercial y→movie content **3** →commercial z, and so on.

[0199] Thus, the mapping information recorded in the bind file (Binding file) is employed to build a virtual file system (VFS), thereby executing playback of a new download content without changing the data of the playlist.

[0200] Description will be made regarding specific examples of a content playback processing example in the case of employing no bind file (Binding file), and a content playback processing example in the case of employing a bind file (Binding file) with reference to FIGS. **11** and **12**.

[0201] FIG. **11** illustrates a content playback example in the case of employing no bind file (Binding file). In step S**201**, the content providing device **150** on which the disc **100** is mounted presents a title list employed for specifying a playback content to the user. For example, a title list is displayed on the display unit of the content providing device **150**.

[0202] In step S**202**, the user selects a title to be played from the title list. In accordance with the selected title the content providing device **150** selects the playlist correlated with the title. Note that the title information and playlist are information recorded beforehand in the disc **100**. A case is shown here wherein the user desires playback of a commercial content [CM#**1**] recorded in the disc **100**, and a playlist in which only the commercial content [CM#**1**] is recorded as a playback content is selected and played.

[0203] A content name serving as content specification information is recorded in a playlist. In this case, the file name of the commercial content [CM#**1**] recorded in the disc **100** is recorded in the playlist, and in step S**203** the content providing device **150** obtains the commercial content [CM#**1**] from the disc **100** based on the recorded information of the playlist to perform playback processing.

[0204] FIG. **12** illustrates a content playback example in the case of employing a bind file (Binding file). The content providing device **150** stores a commercial content [CM#**3**] **352** downloaded from the server, and a bind file (Binding file) **351** in the local storage unit **155**.

[0205] The content providing device **150** on which the disc **100** is mounted builds a virtual file system (VFS) in step S**221**. Processing employing the mapping information (see FIG. **10**) of a bind file (Binding file) is performed at the time of building this VFS. That is to say, in a case wherein a content name which is recorded in a playlist as a content to be played is recorded as "(b) a playback specified content file name on a playlist" of a bind file (Binding file), a VFS is built so as to set "(a) the file name of a content entity (download content)" recorded in a manner corresponding to "(b) the playback specified content file name on a playlist" thereof as an access content.

[0206] Next, in step S**222**, the content providing device **150** presents a title list employed for specifying a playback content to the user. For example, a title list is displayed on the display unit of the content providing device **150**. In step S**223**, the user selects a title to be played from the title list. In accordance with the selected title, the content providing device **150** selects the playlist correlated with the title. Note that the title information and playlist are information recorded beforehand in the disc **100**. A case is shown here wherein the user desires playback of a commercial content [CM#**3**], and a playlist in which only the commercial content [CM#**3**] is recorded as a playback content is selected and played.

[0207] A content name serving as content specification information is recorded in a playlist. In this case, the file name of the commercial content [CM#**3**] **350** recorded in the disc **100** is recorded in the playlist. The content providing device **150** obtains the set content of the virtual file system (VFS) in accordance with the file name recorded in the playlist.

[0208] The virtual file system (VFS) records the file name of the local storage unit **155** by mapping processing as the access destination of the content name [CM**3**] recorded in the playlist. That is to say, the VFS specifies the download content [CM**3**] **352** as a content access destination. In step S**224**, in accordance with the virtual file system (VFS) set in accordance with such mapping information, the data processing unit **151** of the content providing device **150** obtains the commercial content [CM#**3**] **352** downloaded from the local storage unit **155** to perform playback processing.

[0209] Note that building of a virtual file system (VFS) is performed prior to title specification processing by the user. For example, virtual file system (VFS) building processing is performed at the time of the disc **100** being mounted on the content providing device. Description will be made regarding virtual file system (VFS) building sequence with reference to FIG. **13**.

[0210] Upon detecting that the disc being mounted on the content providing device, in step S**251** the content providing device determines whether or not there is a bind file (Binding file) corresponding to a disc in the local storage unit. Various discs are mounted on the content providing device, and the identifier of each disc is recorded in a bind file (Binding file) recorded in the local storage unit in a correlated manner.

[0211] Specifically, in a case wherein the directory corresponding to each disc is set in the local storage unit, and there is a bind file (Binding file) corresponding to each disc thereof, the bind file (Binding file) is recorded in the directory thereof. The content providing device verifies whether or not a bind file (Binding file) is recorded in the directory corresponding to the mounted disc.

[0212] In a case wherein no bind file (Binding file) is recorded in the directory corresponding to the mounted disc, the processing proceeds to step S**252**, where a file system employing no bind file (Binding file) is built, and content playback employing the file system built in step S**254** is performed.

[0213] On the other hand, in a case wherein determination is made in step S**252** that a bind file (Binding file) is recorded in the directory corresponding to the mounted disc, the processing proceeds to step S**253**, where a file system employing

a bind file (Binding file) is built, and content playback employing the virtual file system built (VFS) in step S**254** is performed.

[0214] Processing employing the mapping information of bind file (Binding file) (see FIG. **10**) is performed at the time of building a VFS in step S**253**. That is to say, in a case wherein a content name which is recorded in a playlist as a content to be played is recorded as "(b) a playback specified content file name on a playlist" of a bind file (Binding file), a VFS is built so as to select "(a) the file name of a content entity (download content)" recorded in a manner corresponding to "(b) the playback specified content file name on a playlist" thereof as a playback content.

[0215] That is to say, the virtual file system (VFS) is built as a file system holding mapping information. In the case of having searched with a disc stored file name recorded in a playlist as a search key, the virtual file system (VFS) holding mapping information is configured to present the search result with the file name (download content) of the local storage unit mapped form the file name thereof as an access destination, and the content providing device employs the VFS holding this mapping information to enable the file of the local storage unit determined with the local storage unit stored file name mapped from a recorded file name of the playlist to be obtained and played.

[0216] In step S**255**, determination is made whether or not switching of a title by the user has occurred, and in a case wherein switching of a title has occurred, the processing returns to step S**251**, where the processing is repeated. This is because there is a case wherein a newer bind file (Binding file) than the bind file (Binding file) read the last time has downloaded during playback processing, and in such a case, a virtual file system (VFS) is rebuilt employing the new bind file (Binding file). Note that an arrangement may be made wherein multiple bind files (Binding files) as to one disc are stored by appending version numbers to local storage units, or an arrangement may be made wherein a new bind file (Binding file) is overwritten on an old bind file (Binding file).

[0217] 4. Automatic Download and Automatic Playback Processing of Content

[0218] As described above, with the content playback processing employing mapping information, a playback content is selected with a content name described in a playlist. In a case wherein a content name recorded in the playlist at this time is recorded in a bind file (Binding file) as "(b) a playback specified content file name on the playlist", "(a) the file name of a content entity (download content)" stipulated with the mapping information by the bind file (Binding file) is selected as a playback content.

[0219] For example, in a case wherein the download content from the server is a commercial content, and this commercial content is recorded in the local storage unit, whereby the commercial content recorded in the local storage unit can be played in a sure manner by employing a particular playlist.

[0220] Description will be made regarding processing for automatically playing a commercial content obtained from the server and stored in the local storage unit **155** with reference to FIG. **14**. The content providing device **150** stores the commercial content [CM#**3**] **352** downloaded from the server, and the bind file (Binding file) **351** in the local storage unit **155**.

[0221] The content providing device **150** on which the disc **100** is mounted builds a virtual file system (VFS) in step S**271**. Processing employing the mapping information (see FIG. **10**) of a bind file (Binding file) is performed at the time of building a VFS. That is to say, in a case wherein a content name which is recorded in a playlist as a content to be played is recorded as "(b) a playback specified content file name on a playlist" of a bind file (Binding file), a VFS including mapping information is built so as to select "(a) the file name of a content entity (download content)" recorded in a manner corresponding to "(b) the playback specified content file name on a playlist" thereof as a playback content.

[0222] Next, the user specifies automatic playback in step S**272**. In accordance with this specification, the content providing device **150** selects a playlist for automatic playback processing set as a default beforehand. Note that the playlist is information recorded beforehand in the disc **100**. With this playlist for automatic playback, the commercial content [CM#**3**] is recorded as the first playback content.

[0223] The file name of the commercial content [CM#**3**] is recorded in the playlist as content specification information. The content providing device **150** obtains the content set by the virtual file system (VFS) in accordance with the file name recorded in the playlist.

[0224] An arrangement is made wherein the virtual file system (VFS) specifies not a file of the disc but a file of the local storage unit as the access destination of the content name [CM**3**] recorded in the playlist. That is to say, an arrangement is made wherein a file name of the local storage unit **155** is specified as an access destination by mapping processing. That is to say, the virtual file system (VFS) specifies the download content [CM**3**] **352** stored in the local storage unit **155** as an access destination. In step S**273**, in accordance with such a virtual file system (VFS) including mapping information, the data processing unit **151** of the content providing device **150** obtains the commercial content [CM#**3**] **352** downloaded from the local storage unit **155** to perform playback processing.

[0225] Note that the basic sequence of content download processing has been described with reference to the flowchart shown in FIG. **8**, but with the processing described with reference to FIG. **8**, first, the basic sequence has been described as a processing example wherein a list of contents which can be presented from the server to the user side is presented, and the user selects a content to be downloaded from the list. However, for example, in the case of estimating a situation wherein commercial contents are updated periodically, or the like, the server which provides commercial contents desires to present the latest commercial content to the user constantly to play this with the content providing device on the user side in a sure manner. Description will be made below regarding content automatic download processing and playback sequence example corresponding to such a request.

[0226] First, description will be made with reference to the flowchart shown in FIG. **15** regarding processing sequence for downloading the latest content from the server automatically. Note that FIG. **15** is an example with a commercial content as a download content.

[0227] First, in step S**281**, the user selects an application program (BD-J app) for performing downloading of a content using a title. This processing is executed by the user employing the content providing device **150**. Next, in step S**282**, the content providing device **150** executes the application program (BD-J app) read from the disc **100** by the specification of the user to obtain the identifier of an ID corresponding to the disc, e.g., at lead one identifier of a content ID, volume ID,

and PMSN which is a serial number equivalent to a media ID, which are recorded in a processing control file.

[0228] Next, in step S**283**, the application program (BD-J app) uploads the identifier (ID) corresponding to the disc recorded in the disc obtained in step S**282**, and a list of the commercial contents which the content providing device **150** stores in the local storage unit **155**. The application program (BD-J app) includes a program for executing processing for generating a list of the commercial contents stored in the local storage unit **155** to transmit this to the server, and the data processing unit of the content providing device executes processing in accordance with this application program.

[0229] Step S**284** and step S**285** are processing on the server side, and in step S**284**, the server confirms whether or not the server side holds a commercial content stored in the disc, and a commercial content to be provided to the user other than the commercial contents stored in the local storage unit based on the disc recording identifier (ID) and commercial content list received from the content providing device.

[0230] In a case wherein the server holds no new commercial content to be provided to the user, the processing is ended. In a case wherein the server holds a new commercial content to be provided to the user, in step S**285** the server transmits the latest commercial content to the content providing device on the user side. At this time, the server also transmits a bind file (Binding file) recording mapping information and a playlist file as appropriate.

[0231] Step S**286** is processing of the content providing device on the user side, and the content providing device stores the commercial content received from the server in the local storage unit of the content providing device on the user side. Note that at this time the content providing device also receives the bind file (Binding file) recording mapping information and the playlist file as appropriate, and stores these in the local storage unit.

[0232] Next, content automatic playback processing sequence will be described with reference to the flowchart shown in FIG. **16**. This sequence corresponds to the processing described with reference to FIG. **14**. The content providing device **150** the commercial contents and bind file (Binding file) downloaded from the server in the local storage unit **155**.

[0233] In step S**291**, the content providing device on which the disc is mounted reads the bind file (Binding file) from the local storage unit **155**, and in step S**292** builds a virtual file system (VFS) employing the mapping information (see FIG. **10**) recorded in the bind file (Binding file).

[0234] According to the virtual file system (VFS) building processing, in a case wherein a content name which is recorded in a playlist as a content to be played is recorded as "(b) a playback specified content file name on a playlist" of a bind file (Binding file), "(a) the file name of a content entity (download content)" recorded in a manner corresponding to "(b) the playback specified content file name on a playlist" thereof is selected as a playback content.

[0235] Next, the user requests playback of a content by specifying a title in step S**293**. This title is a playlist for performing playback of a commercial content. An example of this is the playlist for automatic playback processing selected with automatic playback described with reference to FIG. **14**. The content providing device plays the contents recorded in the playlist sequentially.

[0236] In step S**294**, the content providing device determines whether or not the content accessed with an index (content file name) serving as content specification information recorded in the playlist is in the local storage unit, and in a case wherein the content is on the disc, the processing proceeds to step S**295**, where the content providing device reads out a commercial content from the disc, and in step S**297** executes playback of the commercial content, and in a case wherein the content accessed with the index (content file name) recorded in the playlist is in the local storage unit, the processing proceeds to step S**296**, where the content providing device reads out the commercial content from the local storage unit, and in step S**297** executes playback of the commercial content.

[0237] Note that the determination of content access destination in step S**294** is processing executed by employing the virtual file system (VFS) built by employing the mapping information (see FIG. **10**) recorded in a bind file (Binding file). That is to say, in a case wherein a content name which is recorded in a playlist as a content to be played is recorded as "(b) a playback specified content file name on a playlist" of a bind file (Binding file), "(a) the file name of a content entity (download content)" recorded in a manner corresponding to "(b) the playback specified content file name on a playlist" thereof is extracted as a playback content.

[0238] 5. Details of Download Processing According to Content Type

[0239] With the above-mentioned processing examples, a commercial content has been described as an example of a content to be downloaded from the server, but the content to be downloaded from the server is not restricted to a commercial, and for example, a main content such as an AV stream content, Java (registered trademark) application program (BD-J app), playlist, and further in addition to these ordinary contents, usage control information (Usage Rule) is downloaded in some cases. Description will be made below regarding specific download processing sequence regarding each piece of the above-mentioned data.

[0240] 5.1 Download Processing Example of Commercial Content

[0241] First, description will be made regarding a download processing example of a commercial content with reference to FIG. **17**. The example shown in FIG. **17** is not replacement of a commercial content recorded in the disc **100** but an example for adding a new commercial content (CM#**4**) **401**. In this case, a playlist **411** recorded in the disc **100** does not include the playback specification information of the commercial content (CM#**4**) **401** to be downloaded and obtained from the server **191**, and accordingly, a new playlist **402** in which the commercial content (CM#**4**) **401** serving as a download content is recorded as playback content information is also downloaded from the server and stored in the local storage unit **155** of the content providing device **150**.

[0242] First, in step S**301**, the user activates a content management application (BD-J app) recorded in the disc **100** through the input unit (UI) of the content providing device **150** on which the disc **100** is mounted. This processing is equivalent to the activation processing of the content management application (BD-J app **1**) **321** described with reference to FIG. **7**. As described above, as the processing on the user side the content management application (BD-J app **1**) is activated by the same title specification processing as that in the case of playing a movie content.

[0243] According to the execution of the content management application (BD-J app) by the content providing device **150**, in step S**302** the content providing device **150** obtains

identification information recorded in the disc **100**, e.g., at least one of a content ID, volume ID, and PMSN which is a serial number equivalent to a media ID from the disc **100**, and transmits this to the server **191** which performs providing processing of a content or the like. Note that transmission information as to the server **191** may be any data of a content ID, volume ID, and PMSN which is a serial number equivalent to a media ID, or may be data which can identify the other playback disc as long as the data can inform the server of which content is played. Further, an arrangement may be made wherein a user ID, content providing device ID, and so forth are transmitted by the settings of the content management application (BD-J app **1**).

[0244] Upon receiving a download request from the content providing device **150**, the server **191** obtains a download content from a database based on the received disc recorded identification information and so forth to transmit this to the content providing device **150**. In this case, transmission data is the following data.

[0245] (a) commercial content (CM#**4**) **401**,

[0246] (b) playlist file (PlayList file #**2**) **402**, and

[0247] (c) bind file (Binding file) **403**

[0248] Note that the playlist file (PlayList file #**2**) **402** is a playlist in which the commercial content (CM#**4**) **401** is included as a playback content. The content providing device **150** receives the above-mentioned data from the server **191**, and in step S**303** stores this in the local storage unit **155**.

[0249] According to this processing, the following data is recorded in the local storage unit **155**.

[0250] (a) commercial content (CM#**4**) **401**,

[0251] (b) playlist file (PlayList file #**2**) **402**, and

[0252] (c) bind file (Binding file) **403**

[0253] In a state after recording of such data, upon playback with the playlist file (PlayList file #**2**) **402** selected as a playback playlist being performed, content playback including the commercial content (CM#**4**) **401** is performed. For example, in a case wherein the playlist file (PlayList file #**2**) **402** has the following playback specification information,

[0254] Movie Title #**2**→CM #**3**→CM #**4**

Subsequently to Movie Title #**2**, and CM #**3** from the disc **100**, playback of CM #**4** of the local storage unit **155** is performed.

[0255] 5.2 Download Processing Example of Program Content

[0256] Next, a download processing example of a program content will be described with reference to FIG. **18**. The example shown in FIG. **18** is an example wherein the update version of the BD-J app #**2** **441** which is a program content recorded in the disc **100** is obtained from the server **191**.

[0257] First, in step S**321**, the content management application (BD-J app) recorded in the disc **100** is activated through the input unit (UI) of the content providing device **150** on which the user mounted the disc **100**. This processing is equivalent to the activation processing of the content management application (BD-J app **1**) **321** described with reference to FIG. **7**.

[0258] According to the execution of the content management application (BD-J app) by the content providing device **150**, in step S**322** the content providing device **150** obtains identification information recorded in the disc **100**, e.g., at least one of a content ID, volume ID, and PMSN which is a serial number equivalent to a media ID from the disc **100**, and transmits this to the server **191** which performs providing processing of a content or the like. Further, with the present processing example, the content providing device **150** transmits a program component list corresponding to the BD-J app #**2** **441**, which is a program content of which the update version is to be obtained, to the server **191**. With the content manage application (BD-J app **1**), the sequence is stipulated so as to perform processing for generating a program component list corresponding to the BD-J app #**2** **441** to transmit this. Further, a user ID, content providing device ID, and so forth are transmitted in some cases depending on the settings of the content management application (BD-J app **1**).

[0259] Upon receiving a download request from the content providing device **150**, the server **191** obtains a download content from a database based on the received disc recorded identification information and so forth, further calculates the difference as to the BD-J app #**2** **421** serving as an update version with reference to a program component list corresponding to the BD-J app #**2** **441**, and selects only a component included in the received component list to transmit this to the content providing device **150**.

[0260] The server **191** holds a data group which can be transmitted in increments of components as the BD-J app #**2** **421**, and transmits not the component held by the content providing device **150** but the difference alone thereof. In this case, the transmission data is as follows.

[0261] (a) difference of BD-J app #**2**, and

[0262] (b) bind file (Binding file) **422**

[0263] As a result thereof, the following data, i.e.,

[0264] (a) BD-J app #**2** difference data **431**, and

[0265] (b) bind file (Binding file) **422**

are recorded in the local storage unit **155**.

[0266] After download of these data, playback of the BD-J app #**2** is performed, thereby performing playback processing of a combination of the BD-J app #**2** **441** of the previous version recorded in the disc **100**, and an additional component included in the BD-J app #**2** difference data **431** recorded in the local storage unit **155**.

[0267] Thus, the data processing unit of the content providing device **150** transmits the component information of a program content stored in the disc **100** to the server **191**, receives a program component equivalent to the difference with the disc stored program content from the server **191** to store this in the local storage unit **155**, thereby performing program execution processing employing both of the disc stored program and local storage unit stored program.

[0268] Note that, with the above-mentioned processing example, an arrangement is made wherein the difference calculation processing of the BD-J app #**2** is executed at the server **191**, but an arrangement may be made wherein all data of the BD-J app #**2** **421** is transmitted, difference calculation is executed on the content providing device **150** side, and only the difference is stored in the local storage unit **155**, or an arrangement may be made wherein all data of the BD-J app #**2** **421** is recorded in the local storage unit **155** as is, and the BD-J app #**2** **441** of the disc **100** is not employed.

[0269] Note that the setting of the bind file (Binding file) **422** is also setting corresponding to the above-mentioned setting mode. That is to say, the readout portion of the BD-J app #**2** **441** of the previous version recorded in the disc **100** is not subjected to mapping setting, and with regard to the readout data of the component included in the BD-J app #**2** difference data **431** recorded in the local storage unit **155** instead of the BD-J app #**2** of the previous version, the mapping information is recorded in the bind file (Binding file) **422**.

[0270] 5.3 Download Processing Example of Main Content

[0271] Next, description will be made regarding a download processing example of a main content, for example, such as an AV stream which is a movie content with reference to FIG. **19**. The example shown in FIG. **19** is an example wherein a new main content (Movie Title #**3**) **451** is provided to the content providing device **150** on the user side, which differs from a main content (Movie Titles #**1**, #**2**) including an AV stream, for example, such as a movie or the like recorded in the disc **100**.

[0272] In the case of this example, playlists #**1** through #n **461** recorded in the disc **100** does not include the playback specification information of the main content (Movie Title #**3**) **451**, and accordingly, a new playlist **452** in which the main content (Movie Title #**3**) **451** which is a download content is recorded as a content to be played is also downloaded from the server **191** to store this in the local storage unit **155** of the content providing device **150**.

[0273] The playlist **452** is a playlist in which the main content (Movie Title #**3**) **451** which is a download content is recorded as a content to be played. Note that the playlist **452** may be a playlist in which only the main content (Movie Title #**3**) **451** is a playback target, or may be a playlist including another disc stored content as a playback specified content. Also, with the present example, the playlist to be downloaded from the server **191** shows an example of a playlist #n+1 **452**, but an arrangement may be made wherein playlists #n+1 through #n+m are downloaded as multiple playlists wherein a plurality of different playback order information is set.

[0274] Description will be made regarding the processing of each step of the flow in FIG. **19**. First, in step S**341**, the user activates the content management application (BD-J app) recorded in the disc **100** through the input unit (UI) of the content providing device **150** on which the disc **100** is mounted. This processing is equivalent to the activation processing of the content management application (BD-J app **1**) **321** described with reference to FIG. **7**.

[0275] According to the execution of the content management application (BD-J app) by the content providing device **150**, in step S**342** the content providing device **150** obtains the disc recorded identifier of at least one of a content ID, volume ID, and PMSN which is a serial number equivalent to a media ID from the disc **100**, and transmits this to the server **191** which performs providing processing of a content or the like. Note that transmission information as to the server **191** may be any data of a content ID, volume ID, and PMSN which is a serial number equivalent to a media ID, or may be data which can identify the other playback disc as long as the data can inform the server of which content is played. In addition, a user ID, device ID, and so forth may be included in the transmission information.

[0276] Upon receiving a download request from the content providing device **150**, the server **191** obtains a download content corresponding to identification information from a database based on the received disc identification information and so forth to transmit this to the content providing device **150**. In this case, transmission data is the following data.

[0277] (a) main content (Movie Title #**3**) **451**,

[0278] (b) playlist file (PlayList file #n+1) **452**, and

[0279] (c) bind file (Binding file) **453**

[0280] Note that the playlist file (PlayList file #n+1) **452** is a playlist in which the main content (Movie Title #**3**) **451** is included as a playback content.

[0281] Description will be made regarding an example of a playlist file which the server **191** transmits to the content providing device **150** with reference to FIG. **20**. As described above, a playlist is a file stipulating the playback order of contents. With the example shown in FIG. **20**, the following data is recorded.

[0282] Number of streams equivalent to number of playback contents [Number of Streams]: k, and

[0283] Stream file index (Stream fileindex): file name of each stream (content) of k streams (contents).

[0284] The file name of a file created by a content editor (Authoring facility) and included in the server **191** is recorded in the stream file index (Stream fileindex). At least the index of a content file to be downloaded is added to this loop.

[0285] Thus, the server **191** also provides to the user the playlist file (PlayList file #n+1) **452** made up of an updated playlist (Updated PlayList) to which an index (Index) corresponding to the main content (Movie Title #**3**) **451** to be provided to the user is added along with a content.

[0286] As described above, the playlist **452** may be a playlist wherein only the main content (Movie Title #**3**) **451** is a playback target, or may be a playlist including another disc stored content as a playback specified content. For example, in a case wherein the server **191** creates and provides a playlist including a content stored in a disc possessed by the user, and all of the contents to be provided newly as playback contents, the number of streams equivalent to the number of playback contents [Number of Streams]: k becomes the sum of the number of contents (streams) stored in the disc possessed by the user, and the number of contents (number of streams) to be provided newly, and all of the file names are recorded in the index. Note that processing for dividing a single content into multiple streams can be performed, and accordingly, the number of contents is not necessarily matched with the number of streams.

[0287] The content providing device **150** receives the above-mentioned data from the server **191**, and in step S**343** stores this in the local storage unit **155**. According to this processing, the following data, i.e.,

[0288] (a) main content (Movie Title #**3**) **451**,

[0289] (b) playlist file (PlayList file #n+1) **452**, and

[0290] (c) bind file (Binding file) **453**

are recorded in the local storage unit **155**.

[0291] In a state after recording of such data, upon playback with the playlist file (PlayList file #n+1) **452** selected as a playback playlist being performed, content playback including the main content (Movie Title #**3**) **451** is performed.

[0292] 5.4 Download Processing Example of Usage Control Information (Usage Rule)

[0293] Next, description will be made regarding a download processing example of usage control information (Usage Rule) with reference to FIG. **21**. As described above, usage control information (Usage Rule) is data including permissive/non-permissive information of a content usage mode, for example, such as copying/playback control information (CCI) or the like, corresponding to a content, and in the case of performing content use at the content providing device **150**, control is performed so as to perform content use in accordance with usage control information (Usage Rule).

[0294] The example shown in FIG. **21** is a processing example wherein usage control information (Usage Rule) **481** recorded beforehand in the disc **100** is invalidated, and

new updated usage control information (Usage Rule) **471** is provided to the content providing device **150** from the server **191**.

[0295] In the case of this example, usage control information corresponding to main contents (Movie Titles #**1** and #**2**) and commercial contents #**1** and #**2** recorded in the disc **100** is recorded in the usage control information (Usage Rule) recorded in the disc **100**. Usage control information corresponding to main contents (Movie Titles #**1** and #**2**) and commercial contents #**1** and #**2** recorded in the disc **100** is also recorded in the updated usage control information (Usage Rule) **471** newly provided from the server **191**.

[0296] Specifically, for example, there is a processing example wherein, in a case wherein with regard to the main content (Movie Title #**1**), copying has been inhibited for two years since release of the disc, but after elapse of two years copying is permitted, the new updated usage control information (Usage Rule) **471** subjected to copy permissive setting is provided from the server **191** to the content providing device **150**.

[0297] Description will be made regarding the processing of each step in FIG. **21**. First, in step S**351**, the user activates the content management application (BD-J app) recorded in the disc **100** through the input unit (UI) of the content providing device **150** on which the disc **100** is mounted. This processing is equivalent to the activation processing of the content management application (BD-J app **1**) **321** described with reference to FIG. **7**.

[0298] According to the execution of the content management application (BD-J app) by the content providing device **150**, in step S**352** the content providing device **150** obtains, for example, a content ID, volume ID, and PMSN which is a serial number equivalent to a media ID from the disc **100**, and transmits these to the server **191** which performs providing processing of a content or the like. Note that transmission information as to the server **191** may be any data of a content ID, volume ID, and PMSN which is a serial number equivalent to a media ID, or may be data which can identify the other playback disc as long as the data can inform the server of which content is played.

[0299] Upon receiving a download request from the content providing device **150**, the server **191** obtains usage control information (Usage Rule) serving as download data corresponding to identification information from a database based on the received disc identification information and so forth to transmit this to the content providing device **150**. In this case, transmission data is the following data.

[0300] (a) usage control information (Usage Rule) **471**, and

[0301] (b) bind file (Binding file) **472**

[0302] Note that, in the case of the present example, the usage control information (Usage Rule) **471** is data employed as the replacement data of the usage control information (Usage Rule) recorded in the disc **100**, wherein usage control information corresponding to the main content (Movie Titles #**1** and #**2**), and commercial contents #**1** and #**2** recorded in the disc **100** is recorded.

[0303] The content providing device **150** receives such data from the server **191**, and in step S**353** stores the received data in the local storage unit **155**. According to this processing, the following data, i.e.,

[0304] (a) usage control information (Usage Rule) **471**, and

[0305] (b) bind file (Binding file) **472**

are recorded in the local storage unit **155**.

[0306] In a state after recording of such data, usage control is executed in accordance with the usage control information (Usage Rule) **471** newly recorded in the local storage unit **155** at the time of content use such as playback of the main contents (Movie Titles #**1** and #**2**) and commercial contents #**1** and #**2** recorded in the disc **100**.

[0307] Note that the file name of the usage control information (Usage Rule) **481** recorded in the disc is mapped to the file name of the usage control information (Usage Rule) **471** recorded in the local storage unit **155** by employing the mapping information recorded in the bind file (Binding file) **472**, thereby building a virtual file system (VFS). With playback processing employing the file system (VFS) having such mapping information, readout of the usage control information (Usage Rule) **471** recorded in the local storage unit **155** is performed.

[0308] Note that usage control information (Usage Rule) is frequently set according to the type of content. In general, usage of a content such as a movie or the like is restricted strictly, and restrictions regarding usage of a content such as a commercial or the like are alleviated. Description will be made regarding a data structure example of specific usage control information (Usage Rule) with reference to FIGS. **22** and **23**. FIG. **22** shows usage control information (Usage Rule) corresponding to a main content (Movie Title) such as a movie or the like, and FIG. **23** is an example of usage control information (Usage Rule) corresponding to a commercial content.

[0309] Usage control information (Usage Rule) corresponding to a main content (Movie Title) such as a movie or the like has, for example, the following content usage control information, as shown in FIG. **22**.

[0310] (1) EPN (flag regarding Internet retransmission)

[0311] EPN-unasserted: CCI is referenced only at the time of Copy Control Not Asserted

[0312] (2) CCI (Copy control information)

[0313] Never Copy: Copy inhibit

[0314] (3) Image_Constraint_Token (information relating to resolution restriction)

[0315] High Definition Analog Output in High Definition Analog Form: without resolution restriction

[0316] (4) Digital_Only_Token (information relating to analog output)

[0317] Output of decrypted content is allowed for Analog/Digital Outputs: both of digital and analog are output enabled

[0318] (5) APS (information relating to protection of an analog-output content

[0319] APS**1** on: type 1 (AGC): type 1 of Macro-vision

[0320] (6) Type_of_Title (information whether or not Internet connection is indispensable at the time of playback)

[0321] Basic Title: Internet connection is not indispensable

[0322] Also, usage control information (Usage Rule) corresponding to a commercial content has, for example, the following content usage control information, as shown in FIG. **23**.

[0323] (1) EPN (flag regarding Internet retransmission)

[0324] EPN-unasserted: encryption is not indispensable

[0325] (2) CCI (Copy control information)

[0326] Copy Control Not Asserted: without copy restriction, recorded as plaintext

[0327] (3) Image_Constraint_Token (information relating to resolution restriction)

[0328] High Definition Analog Output in High Definition Analog Form: without resolution restriction

[0329] (4) Digital_Only_Token (information relating to analog output)

[0330] Output of decrypted content is allowed for Analog/Digital Outputs: both of digital and analog are output enabled

[0331] (5) APS (information relating to protection of an analog-output content

[0332] APS**1** off: without analog protection

[0333] (6) Type_of_Title (information whether or not Internet connection is indispensable at the time of playback)

[0334] Basic Title: Internet connection is not indispensable

[0335] Note that usage control information (Usage Rule) shown in FIGS. **22** and **23** is an example of usage control information corresponding to each content type, and various settings are performed according to each content type.

[0336] 6. Download Providing Processing Configuration of Playlist as to Playlist Unrecorded Disc

[0337] The above-mentioned content download processing example has been described as an arrangement wherein playback of a disc stored content can be executed by applying a playlist stored beforehand in the disc, and a content to be added and content to be corrected are provided from the server, but for example, an arrangement may be made wherein a main content (Movie Title #n) such as a movie or the like is stored in the disc, a playlist employed for playing this content is not recorded in the disc, playback of the content is disabled only with data recorded in the disc, and playback of the main content (Movie Title #n) recorded in the disc is permitted by downloading a playlist from the server. Such an arrangement example will be described with reference to FIGS. **24** and **25**.

[0338] As described above, a playlist is used for playing a content, and a playback content is selected with the index described in the playlist, thereby executing playback of the content. Accordingly, even when a content such as a movie or the like is recorded in the disc, in a case wherein there is no playlist which sets the content thereof as a playback content, playback of the content thereof is not executed.

[0339] An example which will be described below has an arrangement wherein, for example, a disc storing a movie content is distributed to an unspecified user, following which procedures set beforehand between the content providing device on which the disc is mounted and the server are executed, thereby providing a playlist having the playback specification information of the content stored in the disc from the server to allow the user to store this playlist in the local storage unit of the content providing device on the user side, and accordingly, playback of the disc stored content can be performed by employing the playlist thereof.

[0340] The procedures executed between the content providing device and server are various procedures, for example, such as user registration processing, accounting processing, authentication processing, or the like, which are realized with providing of user information, and can be set arbitrarily on the server side for providing a content.

[0341] Description will be made with reference to FIG. **24** regarding a processing example wherein the content providing device **150** on which the disc **100** wherein a main content (Movie Title #**1**) **501** such as a movie or the like is recorded, and a playlist employed for playback of the main content (Movie Title #**1**) **501** is not recorded is mounted obtains a playlist #**1** (PlayList file #**1**) **511** employed for playback of the main content (Movie Title #**1**) **501** from the server **191**.

[0342] First, in step S**401**, the user activates a content management application (BD-J app #**1**) recorded in the disc **100** through the input unit (UI) of the content providing device **150** on which the disc **100** is mounted. This processing is equivalent to the activation processing of the content management application (BD-J app **1**) **321** described with reference to FIG. **7**. That is to say, the content management application (BD-J app #**1**) recorded in the disc **100** is activated by the same processing as the title specification executed at the time of playback of a movie.

[0343] According to the execution of the content management application (BD-J app #**1**) by the content providing device **150**, in step S**402** the content providing device **150** obtains disc recorded identifiers, e.g., a content ID, volume ID, and PMSN which is a serial number equivalent to a media ID from the disc **100**, and transmits these to the server **191** which performs providing processing of a playlist. Note that transmission information as to the server **191** may be any data of a content ID, volume ID, and PMSN which is a serial number equivalent to a media ID, or may be data which can identify the other playback disc as long as the data can inform the server of which content is played. Also, an arrangement may be made wherein a user ID, content providing device ID, and so forth are transmitted. Such an arrangement is stipulated by the content management application (BD-J app #**1**).

[0344] Upon receiving a download request from the content providing device **150**, in step S**403** the server **191** executes authentication processing with the content providing device **150**. This authentication processing is performed in accordance with authentication conditions set arbitrarily by the server **191**, for example, whether or not the disc **100** mounted on the content providing device **150** is an authentic disc, or whether or not the content providing device **150** is a device wherein playback of a AACS stipulated content is permitted, or the like.

[0345] The content providing device **150** transmits identification data indicating the validity of the disc or the validity of the content providing device to the server **191**, the server **191** performs authentication processing to which the identification data is applied, and as a condition that the validity of the disc or the validity of the content providing device has been confirmed, the content providing device **150** can receive the playlist employed for playback processing of a disc recorded content.

[0346] The server **191** performs authentication employing the ID corresponding to the disc, for example, such as PMSN which is a serial number equivalent to a media ID, and as a condition that this authentication has succeeded, based on the disc identification information received from the content providing device **150**, obtains the playlist corresponding to the identification information from a database, and transmits this to the content providing device **150**. In this case, transmission data is as follows.

[0347] (a) playlist file (PlayList file #**1**) **511**, and

[0348] (b) bind file (Binding file) **512**

[0349] Note that the playlist file (PlayLIst file #**1**) **511** is a playlist in which the main content (Movie Title #**1**) **501** stored in the disc **100** is included as a playback content.

[0350] The content providing device **150** receives such data from the server **191**, and in step S**404** stores this in the local storage unit **155**. According to this processing, the following data, i.e.,

[0351] (a) playlist file (PlayList file #**1**) **511**, and

[0352] (b) bind file (Binding file) **512**

are recorded in the local storage unit **155**.

[0353] In a state after recording of such data, upon playback with the playlist file (PlayList file #**1**) **511** selected as a playback playlist being performed, playback of the main content (Movie Title #**1**) **501** is performed.

[0354] Thus, with the present example, the main content (Movie Title #**1**) **501** stored in the disc **100** is prevented from playback until authentication succeeds, and the playlist is received from the server **191**. Thus, an arrangement is made wherein the playlist is provided to a particular user who is allowed to perform playback, whereby a content stored disc can be freely distributed to the general public.

[0355] Also, a user having an interest in playback of a disc stored content accesses the server, whereby the server can collect user information effectively, for example, by collecting information of a user who accessed the server. As a result thereof, the server **191** can collect the information of a user having an interest in a particular content, and accordingly, processing can be performed such that the preference information of a user is analyzed to provide a new service to a user. Note that obtaining and management processing of the preference information or the like of a user will be described later in detail.

[0356] Note that, with the above-mentioned example, an example has been described wherein a playlist corresponding to a stored content of a disc wherein no playlist is recorded at all is provided from the server, but an arrangement may be made wherein of contents stored in a disc, a playlist for playing a particular content alone is stored in a disc to provide the disc, or a playlist for playing all of the contents stored in a disc is provided from the server. Also, an arrangement may be made wherein a playlist having playback order different from a playlist stored in a disc is provided from the server.

[0357] Thus, an arrangement is made wherein a playlist corresponding to a disc stored content is distributed from the server, and accordingly, for example, a disc is distributed to users of the general public, and a playlist can be distributed to a client alone who executed predetermined procedures from the server, and an arrangement is made wherein playlists including a different playback content are set, and a playlist to be employed is selected according to the user, whereby various playable contents can be set according to the user.

[0358] Also, an arrangement is made wherein a playlist file to be provided by downloading is protected, for example, with an electronic signature employing a secret key of the server, or the like, whereby circulation of an unauthorized playlist can be prevented. That is to say, an arrangement is made wherein an electronic signature employing a secret key of the server is applied to a playlist file to be provided by downloading to provide this to the content providing device on the user side, electronic signature verification is performed with a public key of the server provided on the user side, only in a case wherein confirmation is made that the playlist to be employed is an authorized playlist with no tampering, the playlist thereof is employed, whereby circulation of an unauthorized playlist can be prevented.

[0359] Also, the server **191** may restrict the number of times of download by counting the number of times of download as to each disc employing the content ID, volume ID, PMSN which is a serial number equivalent to a media ID, and so forth. Also, an authorized disc may be found by pirated disc check processing.

[0360] Also, an arrangement may be made wherein, with the authentication processing, the server **191** registers the ID corresponding to the content providing device **150**, e.g., the hardware ID peculiar to the content providing device **150**, or a random number generated by the content providing device on the user side and received as the ID corresponding to the content providing device **150** as the management data of the server, performs the management of the number of times of download in increments of content providing devices, thereby restricting the number of times of download. If an arrangement is made wherein a user ID is transmitted to the server **191**, management by a user ID can be performed.

[0361] Description will be made with reference to the flowchart shown in FIG. **25** regarding the playlist download processing sequence described with reference to FIG. **24**. In step S**421**, the user activates the content management application (BD-J app) recorded in the disc **100** through the input unit (UI) of the content providing device **150** on which the disc **100** is mounted.

[0362] Next, in step S**422**, the content providing device **150** obtains an identifier corresponding to the disc, e.g., at least one of a content ID, volume ID, and PMSN which is a serial number equivalent to a media ID from the disc **100** through the content management application (BD-J app), and in step S**423** transmits the obtained identifier corresponding to the disc to the server for performing playlist providing processing.

[0363] Note that, as described above, the transmission information as to the server may be any data of a content ID, volume ID, and PMSN which is a serial number equivalent to a media ID, or may be data which can identify the other playback disc as long as the data can inform the server of which content is played.

[0364] The subsequent processing in steps S**424** and S**425** is processing on the server side. In step S**424**, the server employs the identifier corresponding to the disc received from the content providing device to execute authentication processing, for example, thereby determining whether or not the disc mounted on the content providing device is an authenticated disc. As described above, this authentication processing is performed in accordance with authentication conditions set by the server arbitrarily, e.g., whether or not the disc **100** mounted on the content providing device **150** is an authentic disc, or whether or not the content providing device **150** is a device wherein playback of a AACS stipulated content is permitted, or the like.

[0365] In a case wherein this authentication has failed, the processing ends without transmitting a playlist. In a case wherein the authentication has succeeded, the processing proceeds to step S**425**, where based on the disc identification information and so forth received from the content providing device, the server obtains the playlist corresponding to the identification information from the database to transmit this to the content providing device. In this case, the transmission data is the following data, i.e.,

[0366] (a) playlist file (PlayList file), and

[0367] (b) bind file (Binding file),

and the playlist file (PlayList file) is a playlist in which a main content (Movie Title) stored in the disc is included as a playback content.

[0368] In step S**426**, the content providing device receives such data from the server to store this in the local storage unit. According to this processing, the playlist file (PlayList file) and bind file (Binding file) are recorded in the local storage unit. In a state after recording of such data, upon playback with the playlist file (PlayList file) selected as a playback

playlist being performed, playback of the main content (Movie Title) recorded in the disc is performed.

[0369] 7. User Management Processing by Server

[0370] The server serving as a content providing device for providing a content or the like to a client (content providing device **150**) receives a content download request from the client (content providing device **150**), and provides a content, e.g., main content such as a movie or the like, commercial content, application program, playlist, usage control information, or the like to the client. The server receives identification information or the like recorded in the disc from the client (content providing device **150**) at the time of this processing. Description will be made below regarding an arrangement example wherein user management is performed based on the data received from the client (content providing device **150**) at the time of content providing processing by the server.

[0371] FIG. **26** is a diagram for describing processing wherein the content providing device **150** on which the disc **100** is mounted accesses the server **191** to perform content download processing. In step S**501**, the user activates an application (BD-J app #**1**) serving as a download processing execution program to execute content download processing.

[0372] In step S**502**, according to the execution of the application (BD-J app #**1**), the content providing device **150** obtains at least one disc recorded ID of a content ID, volume ID, PMSN which is a serial number equivalent to a media ID, recorded in the disc **100**, and transmits such information to the server **191**. With the present example, let us say that data to be transmitted to the server **191** when performing a content download request is any of the following information (a) through (d), or a combination thereof.

[0373] (a) disc recorded ID of at least any of a content ID, volume ID, PMSN which is a serial number equivalent to a media ID,

[0374] (b) identifier of content providing device **150** (content providing device ID)

[0375] (c) user identifier (user ID), and

[0376] (d) user information

The administrator of the server **191** may set arbitrarily what kind of data is requested, and in this case, it is desirable to record the application (BD-J app #**1**) for executing processing in accordance with the setting thereof in the disc **100**.

[0377] The server **191** receives at least one of the above-mentioned information (a) through (d) from the content providing device **150**, executes authentication processing as appropriate, and then transmits a content to the content providing device **150**. In step S**503**, the content providing device **150** stores the content received from the server **191** in the local storage unit **155**.

[0378] The server **191** performs user management based on data received from the content providing device at the content download processing process, e.g., the above-mentioned information (a) through (d), i.e.,

[0379] (a) disc recorded ID of at least one of a content ID, volume ID, PMSN which is a serial number equivalent to a media ID,

[0380] (b) identifier of content providing device **150** (content providing device ID),

[0381] (c) user identifier (user ID), and

[0382] (d) user information.

[0383] Description will be made regarding a specific example of user management with reference to FIG. **27**. FIG. **27** illustrates a directory example of a management database held by the server **191**. With the management database of the server **191**, for example, as shown in FIG. **27**, directories in increments of services (service IDs) provided by the server **191** are set. However, this example is an example, various settings such as in increments of contents, in increments of users, and so forth may be performed.

[0384] With the example shown in FIG. **27**, under the directory of service ID #**1** directories in increments of users (UserID #m through #n) which receive this service are set, which is setting wherein information in increments of users is recorded.

[0385] For example, the purchased disc information of a user m such as shown in the drawing is recorded as the user management information of the user m (UserID #m). As shown in the table on the right side of FIG. **27**, disc IDs are recorded corresponding to indexes. The disc IDs are data received from the content providing device **150** at the time of a content download request as to the server **191**. That is to say, it has been confirmed that the user m (UserID #m) has these discs.

[0386] An arrangement is made wherein the content providing device **150** transmits the ID obtained form the disc mounted on the content providing device **150** to the server **191** at the time of a content download request. At this time, an arrangement is made wherein the server **191** transmits a user ID along with the disc ID, whereby user management information such as shown in FIG. **27** can be generated and updated.

[0387] Thus, for example, if an arrangement is made wherein the identifier of a disc is held for each user ID, the server can count the number of purchased discs of a user, and can change a content to be distributed to the user depending on the count. For example, processing can be performed such that a service content is provided to a user who purchased a certain number of discs. Further, if an arrangement is made wherein the personal information of a user is transmitted to the server **191** at the time of executing download, and the server **191** manages user personal information, processing can be performed such that a distributed content is changed according to user personal information.

[0388] In an arrangement is made wherein a user inputs the personal information of the user such as an address, name, sex, age, hobby, and so forth at the time of a content download request to transmit the information to the server, or an arrangement is made wherein the identification information of the content providing device is transmitted to the server, the server **191** can receive and manage further detailed information, e.g., can generate and update user management information including user personal information and device information such as shown in FIG. **28**. The data shown in FIG. **28** is management data wherein the information of users who purchased a disc storing a particular content is summarized. Note that an arrangement may be made wherein user information, device ID, and so forth are transmitted only once at the time of first content download processing.

[0389] Thus, if an arrangement is made wherein the server holds the identifier of a disc for each user ID or content providing device ID, the server can count the number of purchased discs of a user, or the number of employed discs in increments of content providing devices, and can change a content to be distributed to the user depending on the count. For example, processing can be performed such that a service content is provided to a user who purchased a certain number

of discs. Further, processing can be performed such that a distributed content is changed according to user personal information.

[0390] The server **191** thus obtains information relating to a user and device along with employed disc information, whereby a field or the like which a user has interest in can be analyzed, e.g., the analysis results can be employed for transmission of a message, selective providing of commercial data, or the like as to the user.

[0391] Next, description will be made with reference to FIGS. **29** and **30** regarding a processing example wherein the server is informed of a user actually playing a disc stored content, analyzes such notice information to select a content to be provided to the user.

[0392] With the disc **100** shown in FIG. **29**, the following content set

[0393] (a1) commercial content (CM #**1**),

[0394] (a2) main content #**1** (Movie Title #**1**), and

[0395] (a3) application program (BD-J #**1**),

and the following data set

[0396] (b1) commercial content (CM #**2**),

[0397] (b2) main content #**2** (Movie Title #**2**), and

[0398] (b3) application program (BD-J #**2**),

are recorded therein. Note that, though not shown in the drawing, playlists employed for playback of these contents are stored in the disc **100**.

[0399] For example, a playlist #**1** has a setting for playing the following contents in order of (a1), (a2), and (a3),

[0400] (a1) commercial content (CM #**1**),

[0401] (a2) main content #**1** (Movie Title #**1**), and

[0402] (a3) application program (BD-J #**1**),

and a playlist #**2** has a setting for playing the following contents in order of (b1), (b2), and (b3),

[0403] (b1) commercial content (CM #**2**),

[0404] (b2) main content #**2** (Movie Title #**2**), and

[0405] (b3) application program (BD-J #**2**).

[0406] Now, (a3) application program (BD-J #**1**) is executed by the data processing unit of the content providing device **150**, and is a program for executing processing for informing the server **191** of playback of the following contents being executed.

[0407] (a1) commercial content (CM #**1**), and

[0408] (a2) main content #**1** (Movie Title #**1**)

Note that, with this notice processing, the server **191** is informed of an ID set corresponding to a disc, e.g., at least one disc recorded ID of a content ID, volume ID, and PMSN which is a serial number equivalent to a media ID.

[0409] Similarly, (b3) application program (BD-J #**2**) is executed by the data processing unit of the content providing device **150**, and is a program for executing processing for informing the server **191** of playback of the following contents being executed.

[0410] (b1) commercial content (CM #**2**), and

[0411] (b2) main content #**2** (Movie Title #**2**)

[0412] According to such a playback information notice arrangement, the server **191** can confirm contents actually played at the content providing device **150**. Description will be made regarding a processing example employing such playback information with reference to FIG. **30**.

[0413] FIG. **30** is a diagram illustrating a processing example wherein the server **191** confirms contents played at the content providing device **150** employed by a user, determines the user's preference based on playback content information, and determines and provides a commercial content to be provided to the user from the server **191**.

[0414] With the disc **100** shown in FIG. **30**, the following content set

[0415] (a1) main content #**1** (Movie Title #**1**), and

[0416] (a2) application program (BD-J #**1**),

and the following content set

[0417] (b1) main content #**2** (Movie Title #**2**), and

[0418] (b2) application program (BD-J #**2**),

and unshown playlists are stored therein.

[0419] A playlist #**1** has a setting for playing the following contents in order of (a1), and (a2),

[0420] (a1) main content #**1** (Movie Title #**1**), and

[0421] (a2) application program (BD-J #**1**),

and a playlist #**2** has a setting for playing the following contents in order of (b1), and (b2),

[0422] (b1) main content #**2** (Movie Title #**2**), and

[0423] (b2) application program (BD-J #**2**).

[0424] Now, (a2) application program (BD-J #**1**) includes a program for executing processing for informing the server **191** of playback of (a1) main content #**1** (Movie Title #**1**) being executed, and (b2) application program (BD-J #**2**) includes a program for executing processing for informing the server **191** of playback of (b1) main content #**2** (Movie Title #**2**) being executed.

[0425] First, in step S**541**, when the user employing the content providing device **150** plays the following contents by employing the corresponding playlist,

[0426] (a1) main content #**1** (Movie Title #**1**),

[0427] (a2) application program (BD-J #**1**),

[0428] (b1) main content #**2** (Movie Title #**2**), and

[0429] (b2) application program (BD-J #**2**),

in step S**542** the server **191** is informed of playback fact by execution of each application program. With this notice processing, an ID set corresponding to the disc, e.g., information such as a content ID, volume ID, PMSN which is a serial number equivalent to a media ID, information requested by the server **191**, e.g., identification information of the content providing device **150**, user ID, user information, or the like is informed. Note that such settings can be changed arbitrarily by the following program settings:

[0430] (a2) application program (BD-J #**1**), and

[0431] (b2) application program (BD-J #**2**).

[0432] The server receives such information to record this in a user preference information management database **631**. This database is a database wherein the user management information described with reference to FIGS. **27** and **28** is recorded.

[0433] Next, in step S**543**, the user employing the content providing device **150** activates the application (BD-J app #**1**) serving as a program for executing download processing to execute download processing. In step S**544**, according to the execution of the application (BD-J app #**1**), transmission request data set beforehand in the program, e.g., one of the following information (a) through (d):

[0434] (a) disc recorded ID of at least one of a content ID, volume ID, PMSN which is a serial number equivalent to a media ID,

[0435] (b) identifier of content providing device **150** (content providing device ID)

[0436] (c) user identifier (user ID), and

[0437] (d) user information,

or a combination thereof is transmitted to the server **191**.

[0438] Upon receiving a content download request from the content providing device **150**, the server **191** searches the recorded information of the user preference information management database **631** based on various types of identification information included in the received data, and determines the preference of the user by confirming the data previously received from the user who performed a download request. The server **191** selects a commercial content (CM #**1**) **641** which is a commercial content adapted to the determined user's preference as a download content, and provides this to the content providing device **150**. Note that the server **191** transmits a bind file (Binding file) **642**, and further a playlist as appropriate. In step S**545**, the content providing device **150** stores these received contents in the local storage unit **155**.

[0439] According to such processing, the server can analyze the preference of the user to provide a commercial content according to the user's preference, or the like. For example, specifically, in a case wherein the viewing and listening content of the user is a movie content relating to cars, a car-related commercial is provided, and in a case wherein the viewing and listening content of the user is a South Korean movie content, a commercial of South Korean travel or South Korean products is provided.

[0440] Note that, with the above-mentioned processing example, an arrangement example has been described wherein the preference of the user is determined to provide a commercial content adapted to the user's preference, but a providing content is not restricted to a commercial. For example, an arrangement may be made wherein a main content such as a movie content according to the user's preference is selected to make recommendation of this to the user, or an arrangement may be made wherein a game program content adapted to the user's interest is selected.

[0441] Thus, the server serving as a content providing device for providing a content to a client includes a data processing unit for executing content providing processing in response to a content request from the client (content providing device **150**), the data processing unit receives a disc recorded identifier for identifying a disc or content recorded in the mounted disc of the client, and the identification information of at least either the device identifier of the client side device or the user identifier of the client side user from the client, accumulates the history information of the disc recorded identifier received from the client in the management database in increments of devices or in increments of users, and analyzes the preference of the user on the client side to provide a content adapted to the user's preference based on the accumulation information of the management database. Also, an arrangement may be made wherein the server receives personal information from the client, accumulates the personal information in the management database, and selects a providing content employing the personal information.

[0442] Note that the data processing unit of the server **191** provides the above-mentioned bind file (Binding file) to the client along with a content. That is to say, the data processing unit of the server **191** provides to the client a disc recorded content recorded in the mounted disc of the client (content providing device **150**), and a bind file (Binding file) including the mapping information of a local storage unit stored content provided to the client by the content providing device and stored in the local storage unit of the client. As described above, the mapping information includes information for obtaining and playing a local storage unit stored content as a playback content based on disc recorded content information recorded in a playlist at the time of playback of a content at the client.

[0443] For example, the server **191** performs processing for providing a commercial content adapted to the user's preference, and mapping information for playing the commercial content instead of a disc recorded commercial content recorded in the disc on the client (content providing device **150**) side to the client.

[0444] 8. Creation and Management Processing of Disc Stored Content and Download Content

[0445] Next, description will be made regarding the details of generation and management of a disc stored content and download content, and content providing processing as to the client (content providing device **150**) with reference to FIGS. **31** through **33**. These processing arrangements differ depending on a content type. Description will be made below regarding a processing example corresponding to each content type with reference to FIGS. **31** through **33**.

[0446] (1) Case wherein a download content is an encrypted content (FIG. **31**)

[0447] (2) Case wherein a download content is an unencrypted content (FIG. **32**)

[0448] (3) Case wherein a download content is a program content (FIG. **33**)

[0449] (1) Case Wherein a Download Content is an Encrypted Content

[0450] First, description will be made regarding a processing example in a case wherein a download content is an encrypted content with reference to FIG. **31**.

[0451] FIG. **31** illustrates the following arrangements and processing thereof.

[0452] (a) content editing facility **710** for executing content editing processing,

[0453] (b) disc manufacturing facility **720** serving as a disc manufacturing unit for manufacturing a disc, and

[0454] (c) server **730** for executing content providing processing as to the client (content providing device **150**) Note that the server **730** is equivalent to the server **191** for executing providing processing of a content or bind file with the above description.

[0455] First, the content editing facility **710** performs content editing processing to generate a main content **711** for storing a disc, and a sub content **712** for download. Note that these contents include a playlist and bind file to be applied to the above-mentioned content playback. The generated content is provided to the disc manufacturing facility **720**. Note that content attribute information **713** such as a content ID and so forth is also provided at the time of this providing processing along with the generated content.

[0456] Upon receiving the main content **711** for storing a disc, and sub content **712** for download, generated by the content editing facility **710**, in step S**801** the disc manufacturing facility **720** executes encryption processing of these contents. A key applied to the encryption processing is the CPS unit key **721** described above. Note that a playlist, bind file, and other data become an encryption target in some cases.

[0457] An encrypted content **722** to be recorded in a disc, and an encrypted sub content **723** for download are generated by encryption processing to which the CPS unit key **721** is applied. Note that in a case wherein a single content is classified into multiple units, encryption processing is performed by applying a different CPS unit key in increments of units.

An arrangement may be made wherein a main content and sub content are also subjected to encryption to which a different CPS unit key is applied.

[0458] The encrypted main content **722** is recorded in a stamper. The stamper is a master disc for manufacturing a disc. With the example shown in the drawing, an example is illustrated wherein two master discs: stamper **1** (**725**) and stamper **2** (**726**) are generated. An identifier, i.e., volume ID is set in increments of stampers.

[0459] volume ID #**1** for stamper **1** (**725**), and

[0460] volume ID #**2** for stamper **2** (**726**)

[0461] A disc to be provided to a user is manufactured by employing these stampers. A disc set #**1** **727** is generated based on the stamper **1** (**725**), a disc set #**2** **728** is generated based on the stamper **2** (**726**), and these discs are provided to a user. Note that the same main content is recorded in both of these discs. However, both have a different volume ID.

[0462] Note that though not shown in the drawing, as described above with reference to FIG. **1**, in addition to the contents, various data such as a CPS unit key file, MKB, usage control information (Usage Rule), and so forth is recorded in the discs.

[0463] Further, in step S**802**, the disc manufacturing facility **720** executes encryption processing of the CPS unit key **721** applied to content encryption processing to generate a CPS unit key file. The CPS unit key is encrypted by employing a value derived from a volume ID serving as identification information corresponding to each stamper, or volume ID.

[0464] The disc manufacturing facility **720** provides the following data to the server **730** for executing providing processing of a download content as to a user.

[0465] (a) encrypted sub content **723** encrypted by applying a CPS unit key

[0466] (b) volume ID #**1** and volume ID #**2** serving as a stamper **1** (**725**) and stamper **2** (**726**)

[0467] (c) CPS unit key file #**1** and CPS unit key file #**2** generated by encrypting the CPS unit keys employing volume ID #**1** and volume ID #**2**

[0468] The server **730** holds the following data received from the disc manufacturing facility **720**

[0469] volume ID #**1** (**733**),

[0470] volume ID #**2** (**734**),

[0471] CPS unit key file #**1** (**735**),

[0472] CPS unit key file #**2** (**736**), and

[0473] encrypted sub content **737**,

[0474] and further includes the following programs serving as application programs employed for content download processing

[0475] BD-J app #**2** (**731**), and

[0476] BD-J app #**3** (**732**).

[0477] Note that, as described above, the BD-J app #**2** (**731**) and BD-J app #**3** (**732**) are, for example, application programs for executing the following processing, respectively.

[0478] The BD-J app #**2** executes the following processing:

[0479] (a) processing for allowing a user to select a product (download data),

[0480] (b) processing for informing the server of the product selected by a user, and

[0481] (c) accounting processing (optional).

[0482] The BD-J app #**3**, which is executed at the time of recording download data in the local storage unit, executes the following processing:

[0483] (a) processing for setting an AV-related file (playback target content) in a state available by a virtual file system (VFS) for setting a disc stored content and local storage unit stored content as a virtual media stored content, and recording this in the local storage unit, and

[0484] (b) processing for setting an AACS-related file (management information) in a state available by a VFS to record this to the local storage unit.

[0485] Upon receiving a content download request from an unshown user's content providing device, the server **730** executes download content providing processing. This processing is equivalent to processing described with reference to FIG. **7** and others. Specifically, in step S**821**, the server **730** generates an allowed processing list which is a list of processing which the user (content providing device) is allowed to perform, based on a content ID and user ID included in download request data from the content providing device, and selects the content management application (BD-J app **2**) **731** to provide this to the content providing device. The content providing device displays the allowed processing list on the display unit of the content providing device by processing to which the content management application (BD-J app **2**) **731** received from the server **730** is applied, the user selects a download content, the content providing device transmits the selected information to the server, and further executes settlement processing as appropriate. In this case, the content providing device displays a settlement screen on the display unit of the content providing device, the user inputs data suitable for settlement, for example, such as a credit card number and so forth, on the settlement screen, and the content providing device transmits this data. Following completion of a series of processing, in step S**822**, the server **730** allows download processing, selects data such as a download content and so forth, and transmits the selected information to the content providing device.

[0486] Note that the content providing device, which transmitted a download request to the server **730**, transmits a volume ID obtained from the mounted disc to the server **730**, so the server **730** selects a CPS unit key file based on the received volume ID to provide this to the content providing device. That is to say, even when discs store a content having the same title, if the discs have a different volume ID, applied CPS unit key files differ, so when distributing a CPS unit key file, the server **730** selects a CPS unit key file in accordance with a volume ID.

[0487] Note that the server **730** receives an identifier for identifying a disc or a disc recorded content form the client (content providing device **150**) on which the disc manufactured by the disc manufacturing facility **720** which is a disc manufacturing unit is mounted, and transmits the following data to the client (content providing device **150**):

[0488] (a) server distributing content, and

[0489] (b) bind file (Binding file) having mapping information between a disc recorded content and server distributing content, whereby at the time of playback of a content employing a playlist in which disc recorded content information is recorded as playback content information, the client can perform processing wherein a server distributing content is played in addition to or instead of a disc recorded content specified with a playlist by the content providing processing employing the mapping information described above.

[0490] Also, with the example shown in FIG. **31**, an arrangement is made wherein the disc manufacturing facility **720** which is a disc manufacturing unit performs processing wherein a disc stored content is encrypted by employing the encryption key (CPS unit key **721**), and is recorded in the disc

along with a volume ID which is an identifier corresponding to a disc set made up of multiple discs, and further, a key file (CPS unit key file) including data obtained by encrypting the encryption key (CPS unit key **721**) with the volume ID or a value derived from the volume ID is provided to the server **730**. The server **730** performs processing wherein the volume ID corresponding to the disc mounted on the client (content providing device **150**) is distinguished based on the disc recorded identifier received from the client, and a key file (CPS unit key file) including data encrypted with the same volume ID as the distinguished volume ID, or a value derived from the volume ID is selected to provide this to the client.

[0491] (2) Case Wherein a Download Content is an Unencrypted Content

[0492] Next, description will be made regarding a processing example in a case wherein a download content is an unencrypted content with reference to FIG. **32**. For example, a commercial content or the like is downloaded as an unencrypted content in many cases, and the example shown in FIG. **32** is an example wherein the content editing facility **710** employs a disc stored content and sub content as encrypted contents such as a commercial content or the like.

[0493] FIG. **31** illustrates the following arrangements and processing thereof, similar to FIG. **32**:

[0494] (a) content editing facility **710** for executing content editing processing,

[0495] (b) disc manufacturing facility **720** for manufacturing a disc, and

[0496] (c) server **730** for executing content providing processing.

[0497] First, the content editing facility **710** performs content editing processing to generate a content **714** for storing a disc, and a sub content **715** for download. Note that these contents include a playlist and bind file to be applied to the above-mentioned content playback. The generated contents are provided to the disc manufacturing facility **720**. Note that content attribute information **716** such as a content ID and so forth is also provided at the time of this providing processing along with the generated contents.

[0498] The disc manufacturing facility **720** records an unencrypted content **741** which is the content for storing a disc generated by the content editing facility **710** in the stampers as follows:

[0499] volume ID #**1** for stamper **1** (**725**), and

[0500] volume ID #**2** for stamper **2** (**726**).

[0501] The disc manufacturing processing is similar to the processing described with reference to FIG. **31**, so description thereof will be omitted.

[0502] The disc manufacturing facility **720** provides the following content to the server **730** for executing providing processing of a download content as to a user:

[0503] (a) unencrypted sub content **742**.

[0504] The server **730** holds the following data received from the disc manufacturing facility **720**

[0505] encrypted sub content **751**,

[0506] and further includes the following programs serving as application programs employed for content download processing

[0507] BD-J app #**2** (**731**), and

[0508] BD-J app #**3** (**732**).

[0509] Upon receiving a content download request from an unshown user's content providing device, the server **730** executes download content providing processing. This processing is basically the same processing as the processing described with reference to FIG. **31**. However, the download content is the unencrypted content **751**, so providing processing of a CPS unit key file is not demanded.

[0510] The example shown in FIG. **32** is a processing example wherein the disc manufacturing facility **720** serving as a disc manufacturing unit records an encrypted content in the disc as a disc stored content, and the server **730** executes processing for providing a server distributing content serving as a substituted unencrypted content to be played instead of an encrypted content included as a disc stored content to the client (content providing device **150**). For example, the unencrypted content to be recorded in the disc is a commercial content, and the unencrypted content which the server **730** provides the client is a second commercial content to be played instead of the commercial content recorded in the disc.

[0511] (3) Case Wherein a Download Content is a Program Content

[0512] Next, description will be made regarding a processing example in a case wherein the download content is a program content with reference to FIG. **33**. For example, an application program (BD-J app) for executing content playback processing, or the like can be provided to the user's content providing device through the server. For example, in a case wherein a disc stored content is a content to be played with special playback sequence, or the like, a dedicated program for playing the disc stored content thereof is used in some cases. The application program (BD-J app) applied to such playback is also generated by the content editing facility **710** as a content.

[0513] FIG. **33** illustrates the following arrangements and processing thereof, similar to FIGS. **31** and **32**:

[0514] (a) content editing facility **710** for executing content editing processing,

[0515] (b) disc manufacturing facility **720** for manufacturing a disc, and

[0516] (c) server **730** for executing content providing processing.

[0517] First, the content editing facility **710** performs content editing processing to generate a main content **717** for storing a disc, and a sub content **718** for download. The sub content **718** for download is a program content to be applied to the playback processing of the main content **717** for storing a disc. The generated contents are provided to the disc manufacturing facility **720**. Note that content attribute information **719** such as a content ID and so forth is also provided at the time of this providing processing along with the generated contents.

[0518] The disc manufacturing facility **720** records an unencrypted content **743** which is the content for storing a disc generated by the content editing facility **710** in the stampers as follows:

[0519] volume ID #**1** for stamper **1** (**725**), and

[0520] volume ID #**2** for stamper **2** (**726**).

[0521] The disc manufacturing processing is similar to the processing described with reference to FIG. **31**, so description thereof will be omitted.

[0522] The content editing facility **710** directly provides the sub content **718** for download which is a program content to be applied to the playback processing of the main content **717** for storing a disc to the server **730** for executing providing processing of a download content to a user.

[0523] The disc manufacturing facility **720** executes no processing particularly as to a sub content, so the content editing facility **710** provides the sub content **718** to the server

730 without through the disc manufacturing facility **720**. However, an arrangement may be made wherein the sub content **18** is provided to the server **730** through the disc manufacturing facility **720**.

[0524] The server **730** holds the following data received from the content editing facility **710**

[0525] sub content **711**,

[0526] and further includes the following programs serving as application programs employed for content download processing

[0527] BD-J app #**2** (**731**), and

[0528] BD-J app #**3** (**732**).

[0529] Upon receiving a content download request from an unshown client (content providing device **150**), the server **730** executes download content providing processing. This processing is basically the same processing as the processing described with reference to FIG. **31**. However, the download content is an unencrypted content, so providing processing of a CPS unit key file is not demanded. The server **730** provides a program content to be applied to the playback processing of a disc stored content to the client (content providing device **150**) as a server distributing content.

[0530] As described above, description has been made in detail regarding the present invention with reference to the specific embodiments. Note however, it is clearly evident that one skilled in the art can perform various modifications and alternations of the embodiments without departing from the essence of the present invention. That is to say, the present invention has been disclosed in an exemplification mode, and is not to be interpreted in a limited manner. The Claims should be referred to in order to determine the scope (essence) of the present invention.

[0531] The series of processing described in the present Specification may be executed by hardware, or software, or a compound arrangement of both. In a case of executing the processing by software, a program in which the processing sequence is recorded may be installed for execution in memory within a computer embedded in dedicated hardware, or the program may be installed for execution in a general-purpose computer which can execute various types of processing. For example, the program may be recorded in a recording medium beforehand. The program may be installed in a computer from the recording medium, and also may be received through a network such as a LAN (Local Area Network) or the Internet, and installed in a recording medium such as a built-in hard disk or the like.

[0532] Note that the various types of processing described in the present Specification may be executed not only in time-sequence following the order laid forth but also in parallel or individually according to the processing capabilities of a device for executing the processing or as appropriate. Also, with the present Specification, the term "system" represents a logical group arrangement of multiple devices, which is not restricted to an arrangement wherein the devices each having an individual configuration are housed in the same casing.

[0533] It should be understood by those skilled in the art that various modifications, combinations, sub-combinations and alterations may occur depending on design requirements and other factors insofar as they are within the scope of the appended claims or the equivalents thereof.

What is claimed is:

1. A content providing device serving as a server for executing content providing processing as to a client, comprising:

a data processing unit configured to execute content providing processing in response to a content request from said client;

wherein said data processing unit receives a disc recorded identifier for identifying a disc or content recorded in the mounted disc of said client, and the identification information of at least either the device identifier of a device on the client side, or the user identifier of a user on the client side, from said client, accumulates the history information of the disc recorded identifier received from said client in a management database in increments of devices or users, and analyzes the user's preference on the client side to provide a content adapted to the user's preference.

2. The content providing device according to claim **1**, wherein said data processing unit provides said client with a bind file (Binding file) including mapping information between a disc recorded content recorded in the mounted disc of said client, and a local storage unit stored content provided to said client by said content providing device and stored in a local storage unit of said client;

and wherein said mapping information includes information for obtaining a local storage unit stored content as a playback content to play this based on disc recorded content information recorded in a playlist at the time of content playback at said client.

3. The content providing device according to claim **1**, wherein said data processing unit receives personal information from said client, accumulates the received personal information in said management database, and employs the personal information to select a provided content.

4. The content providing device according to claim **1**, wherein said data processing unit provides a commercial content adapted to the user's preference to said client.

5. The content providing device according to claim **2**, wherein said data processing unit provides said client with a commercial content adapted to the user's preference, and mapping information for playing the commercial content instead of a disc recorded commercial content recorded in the mounted disc of said client.

6. A content providing system comprising:

a client for playing a disc stored content; and

a server for executing content providing processing as to said client;

wherein, with playback of a content recorded in a disc, said client executes a program recorded in the disc, and transmits to said server a disc recorded identifier for identifying a disc or content, and the identification information of at least either the device identifier of a device on the client side or the user identifier of a user on the client side, in accordance with the program;

and wherein said server accumulates the history information of the disc recorded identifier received from said client in a management database in increments of devices or users, and analyzes the user's preference on the client side to provide a content adapted to the user's preference based on the accumulated information of the management database.

7. A data processing method executed at a content providing device serving as a server for executing content providing processing as to a client, comprising:

a data processing step wherein a data processing unit executes content providing processing in response to a content request from said client;

wherein said data processing step includes the steps of

receiving a disc recorded identifier for identifying a disc or content recorded in the mounted disc of said client, and the identification information of at least either the device identifier of a device on the client side or the user identifier of a user on the client side, and

accumulating the history information of the disc recorded identifier received from said client in a management database in increments of devices or users, and analyzing the user's preference on the client side to provide a content adapted to the user's preference based on the accumulated information of the management database.

8. The data processing method according to claim **7**, said data processing step further comprising the step of:

providing said client with a bind file (Binding file) including mapping information between a disc recorded content recorded in the mounted disc of said client, and a local storage unit stored content provided to said client by said content providing device and stored in a local storage unit of said client;

wherein said mapping information includes information for obtaining a local storage unit stored content as a playback content to play this based on disc recorded content information recorded in a playlist at the time of content playback at said client.

9. The data processing method according to claim **7**, said data processing step further comprising the step of:

receiving personal information from said client, accumulating the received personal information in said management database, and employing the personal information to select a provided content.

10. The data processing method according to claim **7**, said data processing step further comprising the step of:

providing a commercial content adapted to the user's preference to said client.

11. The data processing method according to claim **8**, said data processing step further comprising the step of:

providing said client with a commercial content adapted to the user's preference, and mapping information for playing the commercial content instead of a disc recorded commercial content recorded in the mounted disc of said client.

12. A computer program causing a content providing device serving as a server for executing content providing processing as to a client to execute data processing, comprising:

a data processing step wherein a data processing unit executes content providing processing in response to a content request from said client;

wherein said data processing step includes the steps of

receiving a disc recorded identifier for identifying a disc or content recorded in the mounted disc of said client, and the identification information of at least either the device identifier of a device on the client side or the user identifier of a user on the client side, and

accumulating the history information of the disc recorded identifier received from said client in a management database in increments of devices or users, and analyzing the user's preference on the client side to provide a content adapted to the user's preference based on the accumulated information of the management database.

* * * * *