UNITED STATES PATENT AND TRADEMARK OFFICE

BEFORE THE PATENT TRIAL AND APPEAL BOARD

PELOTON INTERACTIVE, INC.,
Petitioner,

v.

NEC CORPORATION,
Patent Owner.

Case IPR2023-01240
Patent 9,769,427

**PATENT OWNER'S NOTICE OF APPEAL
OF FINAL WRITTEN DECISION**

via PTAB P-TACTS
Patent Trial and Appeal Board

via email to efileSO@uspto.gov
Director of the United States Patent and Trademark Office
c/o Office of the Solicitor

via CM/ECF
United States Court of Appeals for the Federal Circuit

Notice is hereby given, pursuant to 37 C.F.R. § 90.2(a), that Patent Owner NEC Corporation ("Patent Owner") appeals to the United States Court of Appeals for the Federal Circuit from the Final Written Decision of the Patent Trial and Appeals Board in Case No. IPR2023-01240, dated February 5, 2025 (Paper 43), attached as **Exhibit A**. In accordance with 37 C.F.R. § 90.2(a)(3)(ii), Patent Owner indicates that the issues on appeal include, but are not limited to, the following:

1. Whether the PTAB erred in finding that Petitioner has shown by a preponderance of the evidence that claims 1, 4-9, 14, 16, 18, 20, 22, 32, and 34-36 of U.S. 9,769,427 ("the '427 Patent") are unpatentable under 35 U.S.C. § 103 in view of Ueda (U.S. 2009/0094321), RFC 3261("the SIP Standard"), and RFC 4566 ("the SDP Standard");
2. Whether the PTAB erred in finding that Petitioner has shown by a preponderance of the evidence that claims 2, 3, 15, and 17 of the '427 Patent are unpatentable under 35 U.S.C. § 103 in view of Ueda, the SIP Standard, the SDP Standard, and Cohee (US 2010/0010884);
3. Whether the PTAB erred by failing to apply the proper legal standard or otherwise erred in its analysis of reasonable diligence in reducing to practice the claimed invention of the '427 Patent;
4. Whether the PTAB erred by failing to adequately consider or address Patent Owner's argument against motivation to combine Ueda with any of

the other cited references;

5. Whether the PTAB erred by failing to adequately address the arguments made by Patent Owner;
6. Whether the PTAB erred by failing to adequately consider evidence presented by Patent Owner;
7. Whether the PTAB erred by basing its analysis on positions taken beyond those of Petitioner, including those presented in the Petition.
8. Whether the PTAB erred by failing to adequately explain its conclusion.

Simultaneous with this submission, copies of this Notice of Appeal are being filed with the Patent Trial and Appeal Board and the Clerk's Office of the United States Court of Appeals for the Federal Circuit along with the required docketing fees, as set forth in the accompanying Certificates of Filing and Service.

Respectfully submitted,

BAKER BOTTS L.L.P.

Date: April 9, 2025

/Eliot D. Williams/

Eliot D. Williams (Reg. No. 50,822)
700 K Street, N.W.
Washington, D.C. 20001-5692
202-639-1334
eliot.williams@bakerbotts.com

Robert L. Maier, Reg. No. 54,291
Jennifer C. Tempesta, Reg. No. 59,021
Michael E. Knierim, Reg. No. 78,268
Nicholas F. Palmieri, Reg. No. 79,277
BAKER BOTTS L.L.P.
30 Rockefeller Plaza
New York, NY 10112-4498
Tel: (212) 408-2500
robert.maier@bakerbotts.com
jennifer.tempesta@bakerbotts.com
michael.knierim@bakerbotts.com
nick.palmieri@bakerbotts.com

Attorneys for Patent Owner NEC Corporation

CERTIFICATE OF FILING

I hereby certify that, in addition to being filed electronically through the Patent Trial and Appeal Board's P-TACTS system, a true and correct copy of the above-captioned Petitioner's Notice of Appeal of Final Written Decision is also being filed pursuant to 37 C.F.R. § 90.2(a) with the Director of the United States Patent and Trademark Office, on April 9, 2025, by electronic mail to efileSO@uspto.gov, which is the email address indicated on the United States Patent and Trademark Office's web page for the Office of the General Counsel, <https://www.uspto.gov/about-us/organizational-offices/office-general-counsel>.

I also hereby certify that a true and correct copy of the above-captioned Petitioner's Notice of Appeal of Final Written Decision, along with the filing fee, is being filed via CM/ECF with the Clerk's Office of the United States Court of Appeals for the Federal Circuit on April 9, 2025.

Date: April 9, 2025

/Eliot D. Williams/

Eliot D. Williams (Reg. No. 50,822)
700 K Street, N.W.
Washington, D.C. 20001-5692
202-639-1334
eliot.williams@bakerbotts.com

Lead Counsel for Patent Owner NEC Corporation

CERTIFICATE OF SERVICE

The undersigned hereby certifies on this 9th day of April 2025, that a true and correct copy of the foregoing **PATENT OWNER'S NOTICE OF APPEAL OF FINAL WRITTEN DECISION** was served in its entirety on the following parties via electronic mail:

Scott Weidenfeller (sweidenfeller@cov.com)
Anupam Sharma (asharma@cov.com)
Peloton-Cov-IPR@cov.com

BAKER BOTTS L.L.P.

/Eliot D. Williams/
Eliot D. Williams (Reg. No. 50,822)
Lead Counsel for Patent Owner

Date: April 9, 2025

Exhibit A

Trials@uspto.gov
571-272-7822

Paper: 43
Entered: February 5, 2025

UNITED STATES PATENT AND TRADEMARK OFFICE

BEFORE THE PATENT TRIAL AND APPEAL BOARD

PELOTON INTERACTIVE, INC.,
Petitioner,

v.

NEC CORPORATION,
Patent Owner.

IPR2023-01240
Patent 9,769,427 B2

Before MICHAEL J. STRAUSS, CHARLES J. BOUDREAU, and CHRISTOPHER L. OGDEN, *Administrative Patent Judges*.

OGDEN, *Administrative Patent Judge*.

JUDGMENT
Final Written Decision
Determining All Challenged Claims Unpatentable
35 U.S.C. § 318(a)

I. INTRODUCTION

Peloton Interactive, Inc. ("Petitioner") filed a Petition (Paper 3, "Pet.") under 35 U.S.C. §§ 311–319 requesting *inter partes* review ("IPR") of claims 1–9, 14–18, 20, 22, 32, and 34–36 of U.S. Patent No. 9,769,427 B2 (Ex. 1001, "the '427 patent"). NEC Corporation ("Patent Owner") filed a Patent Owner Response (Paper 20, "PO Resp."), Petitioner filed a Reply to the Patent Owner Response (Paper 26, "Pet. Reply"), and Patent Owner filed a Sur-reply (Paper 27, "PO Sur-reply").

We held a combined oral hearing in this proceeding and IPR2023-01241 on November 8, 2024, and the transcript is entered into the record. Paper 42 ("Tr.").

This is a final written decision under 35 U.S.C. § 318(a) as to whether the claims challenged in the *inter partes* review are unpatentable. For the reasons below, we conclude that all the challenged claims are unpatentable.

II. BACKGROUND

A. THE '427 PATENT (EX. 1001)

The '427 patent describes "a content delivery system transmitting content data representing content to user equipment." Ex. 1001, 1:5–7. Such systems, as known in the prior art, "includ[ed] a content transmitter, a content receiver, and a connection controller (SIP (Session Initiation Protocol) server)." *Id.* at 1:11–13. According to the '427 patent, the earlier systems could provide pre-stored content data to the content receiver but were unable to insert user-relevant advertisements into the main content. *See Id.* at 1:14–47. Thus, an object of the claimed invention was "to provide a

content delivery system capable of solving the problem that it [wa]s impossible to cause a user to view the user's desired content and/or advertisement content selected according to the user." *Id.* at 1:48–52.

Figure 1 is reproduced below:

Fig.1

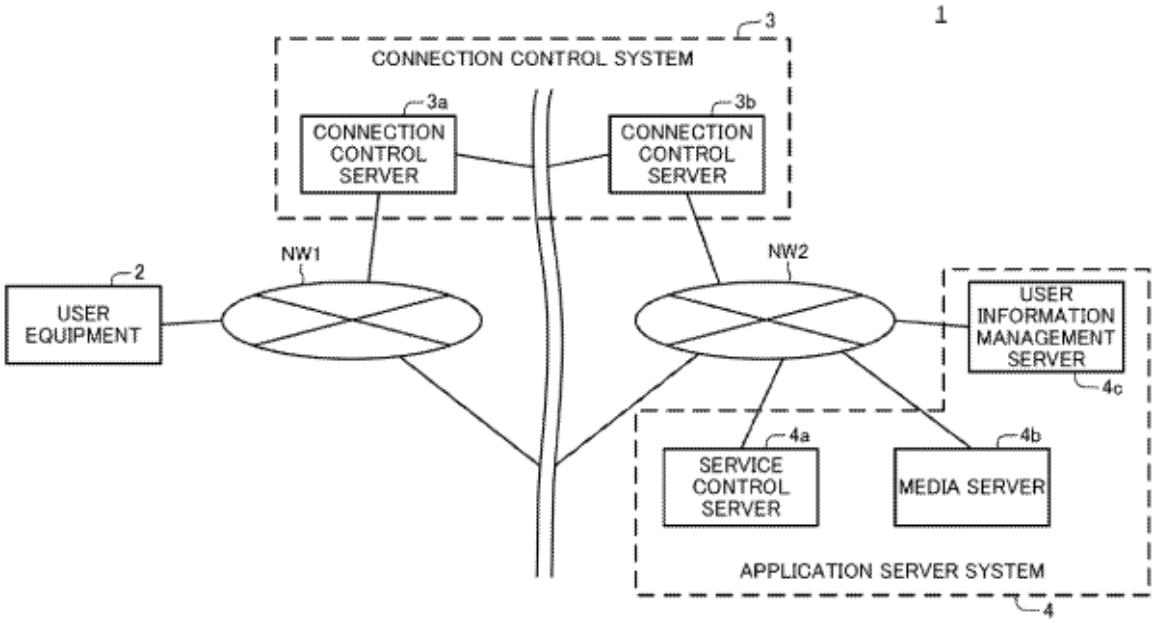

Figure 1 depicts content delivery system 1, which implements video on demand or Internet Protocol television ("IPTV"). Ex. 1001, 4:58–62. The system includes user equipment 2, connection-control system 3 (including servers 3*a* and 3*b*), and application-server system 4. *See id.* at 4:63–5:57. These components communicate with each other through internet communication lines NW1 and NW2. *See id.* at 5:4–10.

Connection control system 3 "is configured to establish, upon receiving a SIP message containing equipment specification information transmitted by the user equipment 2, [a] connection (session) between the application server system 4 and the user equipment 2." Ex. 1001, 5:42–46. Application server 4 then provides the requested content to user equipment

2, with service control server 4*a* transmitting content data provided by media server 4*b*. *Id.* at 5:49–53. User information management server 4*c* stores, and provides to service control server 4*a*, profile information of the users of user equipment 2. *Id.* at 5:53–57.

Figure 2 of the '427 patent, showing the system functionally and in more detail, is reproduced below:

Fig.2

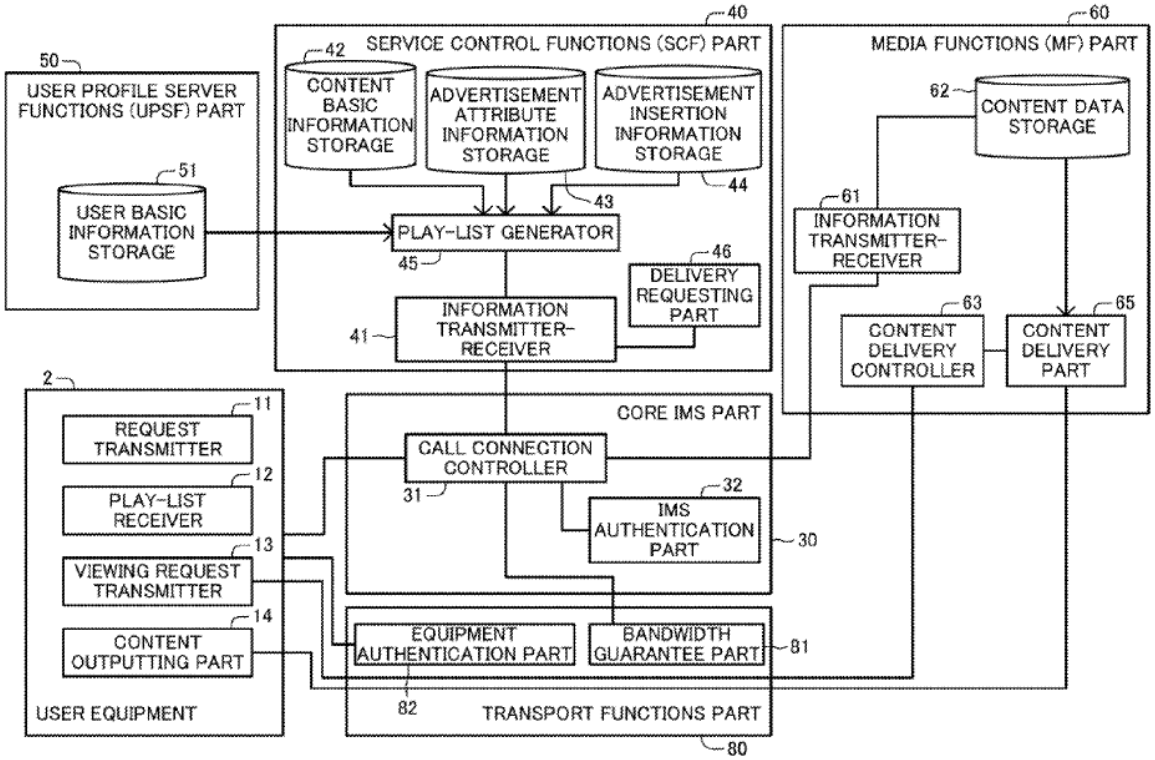

Figure 2 is a block diagram showing functions of content delivery system 1. Ex. 1001, 5:59–60. The lower-central part of the figure shows that the functions of connection control system 3 are divided into two parts: (1) core Internet Protocol multimedia subsystem ("IMS") part 30 that includes call connection controller 31 and IMS authentication part 32; and (2) transport functions ("TF") part 80, which includes equipment authentication part 82 and bandwidth guarantee part 81. *Id.* at 7:51–55. Other functional parts of

the system depicted in Figure 2 include user equipment 2, service control functions ("SCF") part 40, and media functions ("MF") part 60.

Figure 5, reproduced below, depicts the process for establishing a connection between user equipment 2 and media server 4*b* to transmit media that an authenticated user has selected from a list of available content (*see* Ex. 1001, 13:14–49):

Fig.5

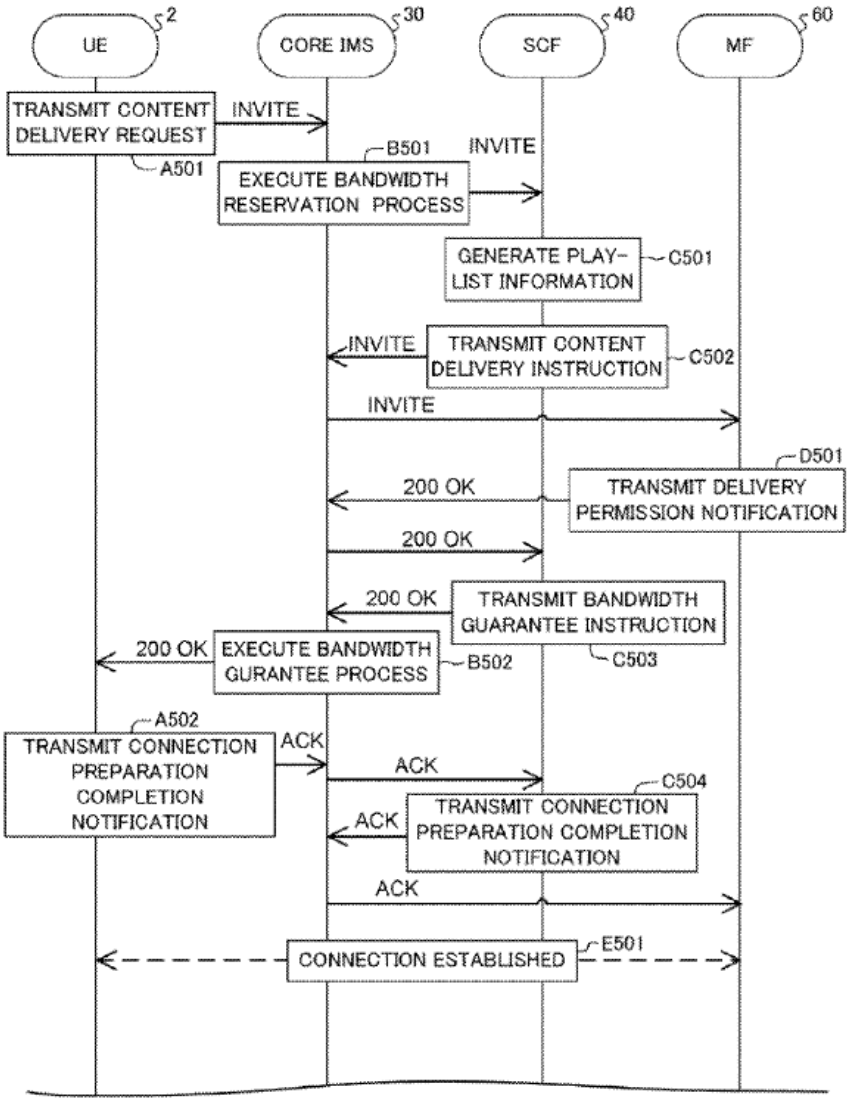

As shown above, Figure 5 begins when user equipment (UE) 2 sends "transmit content delivery request message" A501 to core IMS part 30

within connection control system 3. Ex. 1001, 13:50–58. SIP "INVITE" message A501 includes "main content identification information, user authentication success information as the user identification information for identifying the user, and equipment address information." *Id.* at 13:50–58.

Core IMS part 30 then "executes a bandwidth reservation process [B501] as preparation for guaranteeing a communication bandwidth" and transmits request A501 to SCF part 40 (part of service control server 4*a*). Ex. 1001, 13:59–64. SCF part 40 then uses user information to generate a playlist (C501) including main content and relevant advertisements stored in media server 4*b* and send that playlist (C502) to media functions ("MF") part 60 (part of media server 4*b*) in a SIP message via core IMS part 30. *See id.* at 13:65–14:64.

Based on the available media delivery information and the generated media playlist, SCF part 40 "determines a communication bandwidth required for transmitting the main content data identified by the play-list information" and "transmits, to the core IMS part 30, a bandwidth guarantee instruction [C503] containing communication bandwidth information indicating the determined communication bandwidth." Ex. 1001, 15:14–26. Bandwidth guarantee instruction C503 is in the form of a "200 OK" SIP message. *Id.* at 15:26–27. Core IMS part 30 then "transmits, to the transport functions [TF] part 80, the received communication bandwidth information and communication channel specification information for specifying a communication channel between the user equipment 2 and the media server 4*b*." *Id.* at 15:30–34. TF part 80 "executes a process to guarantee the communication bandwidth information" and then core IMS part 30 sends a "transmission preparation completion notification" in the form of a "200

OK" SIP message (B502[1]) which also "contains the received media delivery specification information and play-list information" to user equipment 2. *Id.* at 15:41–56. After a series of acknowledgements, a connection is established between user equipment 2 and media server 4*b* (A502, C504, E501). *Id.* at 16:4–35.

B. CHALLENGED CLAIMS AND GROUNDS

Of the challenged claims, claims 1, 14, 18, 20, 22, 32, and 34–36 are independent. Claims 2–9 depend from claim 1, and claims 15–17 depend from claim 14. Claim 1 is representative and reads as follows:

> 1. A content delivery system comprising
>
> [1a] an application server system and
>
> [1b] one or more connection control servers,
>
> the one or more connection control servers being configured to receive equipment specification information transmitted by a user equipment and establish a connection between the application server system and the user equipment based on the received equipment specification information,
>
> [1c] the application server system comprising:
>
> a memory for storing sub content data representing sub content and main content data representing main content;
>
> [1d] a first receiver for receiving a content delivery request transmitted by the user equipment and containing

---

[1] In Figure 5, the label B502 corresponds to "execute bandwidth guarantee process," but the explanatory text states that B502 refers to the step of transmitting a "transmission preparation completion notification" SIP message to UE 2. Ex. 1001, 15:41–48.

main content identification information for identifying the main content;

[1e] a processor for selecting the stored sub content data based on selection information containing attribute information representing an attribute of the sub content; and

[1f] a first transmitter for transmitting selected sub content specification information for specifying the selected sub content data via the one or more connection control servers to the user equipment which has transmitted the content delivery request,

[1g] wherein the first transmitter is configured to, at a same time that the one or more connection control servers executes a process for guaranteeing a communication bandwidth required for transmitting content data as a process for establishing the connection, transmit the play-list information via the one or more connection control servers to the user equipment which has transmitted the content delivery request,

[1h] the play-list information being information containing the main content identification information contained in the content delivery request and the selected sub content specification information, and the play-list information being information containing information indicating a sequence in which the main content identified by the main content identification information and the sub content specified by the selected sub content specification information are output,

[1i] wherein the user equipment comprises a second receiver for receiving main content data and sub content data transmitted by the application server system and output, based on the received main content data and sub content data, viewing content in which sub content represented by the sub content data is inserted in main content represented by the main content data.

Ex. 1001, 36:56–37:37 (Petitioner's reference numbers added).

Petitioner argues four grounds for *inter partes* review, as summarized in the following table:

Claim(s) Challenged	35 U.S.C. §	Reference(s)/Basis
1, 4–9, 14, 16, 18, 20, 22, 32, 34–36	103(a)[2]	Ueda,[3] SIP Standard,[4] SDP Standard[5]
1, 4–9, 14, 16, 18, 20, 22, 32, 34–36	103(a)	Ueda, SIP Standard, Bechtolsheim[6]
2, 3, 15, 17	103(a)	Ueda, SIP Standard, SDP Standard, Cohee[7]
2, 3, 15, 17	103(a)	Ueda, SIP Standard, Bechtolsheim, Cohee

Pet. 3–4.

---

[2] 35 U.S.C. § 103(a) (2006), *amended by* Leahy–Smith America Invents Act ("AIA"), Pub. L. No. 112-29 § 103, sec. (n)(1), 125 Stat. 284, 287, 293 (2011) (effective Mar. 16, 2013). Because the application for the '427 patent was filed before the effective date of the AIA, we refer to the pre-AIA version of § 103, as does Petitioner. *See* Ex. 1001, code (22); Pet. 13, 16, 18, 19.

[3] Ueda et al., US 2009/0094321 A1 (published Apr. 9, 2009) (Ex. 1003).

[4] J. Rosenberg et al., *SIP: Session Initiation Protocol* (RFC 3261, Network Working Grp., Internet Eng'g Task Force, 2002) (Ex. 1004).

[5] M. Handley et al., *SDP: Session Description Protocol* (RFC 4566, Network Working Grp., Internet Eng'g Task Force, 2006) (Ex. 1005).

[6] Bechtolsheim et al., US 2009/0100496 A1 (published Apr. 16, 2009) (Ex. 1006).

[7] Cohee et al., US 2010/0010884 A1 (published Jan. 14, 2010) (Ex. 1007).

C. TESTIMONIAL EVIDENCE

Petitioner submits an expert declaration by Clifford Reader, Ph.D. Ex. 1008; *see also* Ex. 1016 (Dr. Reader's curriculum vitae); Ex. 2029 (deposition transcript of Dr. Reader).

Patent Owner submits two expert declarations by Jeremy R. Cooperstock, Ph.D. Exs. 2001, 2010; *see also* Ex. 2002 (Dr. Cooperstock's curriculum vitae); Ex. 1017 (deposition transcript of Dr. Cooperstock). Patent Owner also submits fact-witness declarations by Kunihiro Taniguchi, Shunsuke Chishiro, and Motohiro Baba, relating to the alleged conception and reduction to practice of the claimed invention. Exs. 2011, 2022, 2023.

D. RELATED PROCEEDINGS

As related matters, the parties identify *NEC Corp. v. Peloton Interactive, Inc.*, No. 22-cv-00987 (filed D. Del. July 28, 2022) ("related district court case"); *NEC Corp. v. Our Body Electric, Inc.*, No. 22-cv-00986 (filed D. Del. July 28, 2022); and *NEC Corp. v. Tone It Up, Inc.*, No. 22-cv-00988 (filed D. Del. July 28, 2022). Pet. 1; Paper 7, 2.

Additionally, Petitioner has challenged claims 10–13, 19, 21, 23, and 33 of the '427 patent in the IPR2023-01241 proceeding, which is the subject of a separate final written decision.

III. ANALYSIS

A. LEVEL OF ORDINARY SKILL IN THE ART

The level of ordinary skill in the pertinent art at the time of the invention is a factor in how we construe patent claims. *See Phillips v. AWH Corp.*, 415 F.3d 1303, 1312–13 (Fed. Cir. 2005) (en banc). It is also one of

the factors we consider when determining whether a patent claim is obvious over the prior art. *See Graham v. John Deere Co.*, 383 U.S. 1, 17–18 (1966).

To assess the level of ordinary skill, we construct a hypothetical "person of ordinary skill in the art," from whose vantage point we assess obviousness and claim interpretation. *See In re Rouffet*, 149 F.3d 1350, 1357 (Fed. Cir. 1998). This legal construct "presumes that all prior art references in the field of the invention are available to this hypothetical skilled artisan." *Id.* (citing *In re Carlson*, 983 F.2d 1032, 1038 (Fed. Cir. 1993)).

Petitioner argues that a person of ordinary skill in the art "would have had a bachelor's degree, or equivalent, in electrical engineering, computer science, or a related field, and 2–3 years of experience researching, designing, or developing content delivery systems and related hardware, software, and firmware, or equivalent experience." Pet. 4 (citing Ex. 1008 ¶¶ 36–40). Patent Owner does not dispute this. *See* PO Resp. 3 (citing Ex. 2001 ¶ 22).

Because it is uncontested, supported by testimonial evidence, and appears consistent with the types of problems and solutions in the '427 patent, we adopt the above articulation of the level of ordinary skill for this decision.

B. CLAIM CONSTRUCTION

In an *inter partes* review, we construe a patent claim "using the same claim construction standard that would be used to construe the claim in a civil action under 35 U.S.C. 282(b)." 37 C.F.R. § 42.100(b). This generally includes "construing the claim in accordance with the ordinary and customary meaning of such claim as understood by one of ordinary skill in

the art and the prosecution history pertaining to the patent." *Id.* The ordinary and customary meaning of a claim term "is its meaning to the ordinary artisan after reading the entire patent" and "as of the effective filing date of the patent application." *Phillips*, 415 F.3d at 1313, 1321.

There are only two circumstances in which a construction may depart from the ordinary and customary meaning: "1) when a patentee sets out a definition and acts as [their] own lexicographer, or 2) when the patentee disavows the full scope of a claim term either in the specification or during prosecution." *Thorner v. Sony Comput. Entm't Am. LLC*, 669 F.3d 1362, 1365 (Fed. Cir. 2012). Any such special meaning of a term "must be sufficiently clear in the specification that any departure from common usage would be so understood by a person of experience in the field of the invention." *Multiform Desiccants Inc. v. Medzam Ltd.*, 133 F.3d 1473, 1477 (Fed. Cir. 1998).

Petitioner argues that we should specifically construe three terms, which we discuss below.

1. "equipment specification information"

First, Petitioner contends that we should interpret the term *equipment specification information* to mean "an identifier for identifying the user equipment," because in several figures of the '427 patent, SIP messages include SIP URIs (Uniform Resource Identifiers) associated with the user requesting the content. *See* Pet. 9 (emphasis omitted).

Patent Owner disagrees with Petitioner's proposed construction and argues that "this term should be given its plain and ordinary meaning." PO Resp. 4. Patent Owner contends that no particular construction is

necessary because the term is not relevant to the contested issues in the Petition. *See id.*

We agree with Patent Owner that the term should be construed according to its ordinary and customary meaning, and that we need not construe the term explicitly because the meaning of the term is not relevant to the contested issues in the proceeding. *See Realtime Data, LLC v. Iancu*, 912 F.3d 1368, 1375 (Fed. Cir. 2019) ("The Board is required to construe 'only those terms . . . that are in controversy, and only to the extent necessary to resolve the controversy.'" (quoting *Vivid Techs., Inc. v. Am. Sci & Eng'g, Inc.*, 200 F.3d 795, 803 (Fed. Cir. 1999))).

2. "the one or more connection control servers executes a process for guaranteeing a communication bandwidth required for transmitting content data as a process for establishing the connection"

Second, Petitioner argues that we should construe the phrase *the one or more connection control servers executes a process for guaranteeing a communication bandwidth required for transmitting content data as a process for establishing the connection* "to cover at least the preferred (and only) embodiment described in the '427 Patent," which according to Petitioner is not described in any substantial detail apart from the sending of associated SIP messages. Pet. 10 (citing Ex. 1001, 7:48–50, 8:64–9:4, 15:35–40, Figs. 5, 13, 15, 18; Ex. 1008 ¶ 64). Petitioner argues that a person of ordinary skill in the art would have understood the bandwidth guarantee to be "a standard process performed by SIP servers using SIP messages." *Id.* (citing Ex. 1008 ¶ 64).

Patent Owner argues that "the term be accorded its plain and ordinary meaning . . . , which would, at least, specifically exclude 'a standard process

performed by SIP servers using SIP messages.'" PO Resp. 6. According to Patent Owner, the '427 patent specification distinguishes between SIP messages and the bandwidth guarantee process. *Id.* at 4–5 (citing Ex. 1001, 15:49–56; Ex. 2001 ¶ 44). And Patent Owner disagrees that the specification does not substantially elaborate on the meaning of the latter, because the recited bandwidth guarantee process takes place in transport functions (TF) part 80 of connection control system 3, which works independently from messages that would be part of the SIP Standard. *See id.* at 5–6 (citing Ex. 1001, 15:29–40; Ex. 1004, 1, 9; Ex. 1008 ¶ 64; Ex. 2001 ¶ 45). According to Patent Owner, Petitioner's proposed construction would exclude this embodiment. *Id.* at 6.

In its Reply, Petitioner clarifies that it is not proposing that the SIP messages, *themselves*, perform the bandwidth guarantee process. Pet. Reply 1. According to Petitioner, "SIP messages convey information which may be used to affirm the needed bandwidth is available before continuing or aborting the session connection process." *Id.* at 1–2.

Petitioner also argues that its explicit position in the Petition was that the term should be construed to *include* the embodiment in which the bandwidth guarantee process takes place in bandwidth guarantee part 81 (a component of TF part 80). Pet. Reply 1 (citing Ex. 1001, 8:64–9:4, 15:35–40). Petitioner argues that the '427 patent specification does not elaborate on the meaning of the bandwidth guarantee process apart from "indicat[ing] a part of a server in this embodiment where the bandwidth guarantee process 'takes place,'" and "there is no further detail about *what* takes place or *how*." *Id.* at 2–3 (internal quotes omitted).

In its Sur-reply, Patent Owner argues that Petitioner's explanation in the Reply that the '427 patent's embodiment of the bandwidth guarantee process uses SIP messages but does not simply constitute the SIP messages themselves is an improper new argument. PO Sur-reply 1–2. Patent Owner insists that Petitioner's original position is that SIP messages, "exclusively," perform the recited process and that this proposed "construction is contrary to the actual embodiment described in the patent," which "is specifically *not* performed by SIP messages." *Id.* (citing Ex. 1001, 15:35–37). Patent Owner also argues that Petitioner "fails to identify any . . . transport protocols which, consistent with the '427 Patent, execute the bandwidth limitation."

We disagree that Petitioner's argument in the Reply is untimely. As we noted in our Institution Decision, we understand Petitioner's initial position to be that the recited bandwidth guarantee process may involve the use of SIP messages by SIP servers (for example, to check that the specified bandwidth does not exceed the available bandwidth and then either continuing or aborting the process for establishing the connection). *See* Paper 16, 41 (citing Pet. 48; Ex. 1008 ¶ 189). But Petitioner clearly intended its proposed construction to include, within the scope of the term, the '427 patent's embodiment in which the bandwidth guarantee process takes place in a connection control server, and specifically in bandwidth guarantee part 81 based on information received from call connection controller 31 (a component of core IMS part 30). *See* Pet. 10 (citing Ex. 1001, 8:64–9:4, 15:35–40); Ex. 1008 ¶¶ 51, 64. Patent Owner also ignores Petitioner's statement in the Petition that the bandwidth guarantee process is performed "by SIP servers." Pet. 10.

Petitioner's argument that SIP servers perform a bandwidth guarantee process by, at least in part, using SIP messages is consistent with the disclosure in the '427 patent, which also uses SIP messages (e.g., "bandwidth guarantee instruction" C503 and "transmission preparation completion notification" B502) as part of executing a bandwidth guarantee process. *See* Ex. 1001, 15:21–53, Fig. 5.

We also agree with Petitioner that the '427 patent does not provide substantial detail about what it means for a connection control server to execute a process for guaranteeing a communication bandwidth. Given the lack of explanation in the '427 patent, we find it reasonable that a person of ordinary skill in the art would have understood the recited process to involve well-known steps that did not need further elaboration. Although Petitioner does not identify any specific transport protocols that might be involved in this process, the claims do not require that transport protocols are part of a bandwidth guarantee, and Patent Owner has not brought to our attention any embodiments in the '427 patent in which a transport protocol is involved in a bandwidth guarantee process.

Given the lack of specifics in the '427 patent about the meaning of the bandwidth guarantee process limitation, we determine that a person of ordinary skill in the art would have understood the term to have its ordinary and customary meaning. We also determine that the evidence of record does not suggest a need or basis to explicitly elaborate on that meaning beyond the language of the term itself, although it is clear that the process may at least partially involve the transmission of SIP messages as occurs in the '427 patent. *See* Ex. 1001, 15:21–56, Fig. 5.

3. *"at a same time . . . transmit[ting] the play-list information . . . to the user equipment which has transmitted the content delivery request"*

Petitioner argues that the phrase *at a same time . . . transmit[ting] the play-list information . . . to the user equipment which has transmitted the content delivery request* should "be construed to cover the preferred (and only) embodiment described in the '427 Patent," which involves transmitting the play-list information "as part of a standard OK message to a standard SIP server." Pet. 11–13 (citing Ex. 1001, 7:24–35, 15:21–25, 15:41–48; Ex. 1002, 72–73; Ex. 1008 ¶¶ 67–68). As to the timing, Petitioner appears to interpret the phrase (including the omitted language reflected by the ellipsis) as requiring the play-list to be transmitted at the same time the bandwidth-guarantee process is executed. *See* Pet. 11.

Patent Owner argues that the term should not be construed to involve a standard process performed by SIP servers using SIP messages, and that the transmission of play-list information does not occur at the same time as the bandwidth guarantee process. PO Resp. 6–8 & n.4. Rather, according to Patent Owner, "the specification [of the '427 patent] makes clear that play-list information transmission and connection establishment[] proceed 'at a same time' as one another." *Id.* at 7 (citing Ex. 1001, 19:13–18). Although Patent Owner acknowledges that "the bandwidth guarantee process occurs during the connection establishment process," Patent Owner contends that the play-list information can be transmitted at any time while the connection is being established. *Id.* at 7 n.4 (citing Ex. 1002, 72–73; Ex. 2001 ¶ 51).

We note that, during prosecution of the '427 patent, the applicant argued for a construction consistent with Patent Owner's argument. Ex. 1002, 72–73 ("[C]laim 1 states that the first transmitter [is] configured to

transmit play-list information at a same time that the one or more connection control servers executes a process for establishing the connection." (emphasis omitted)). Patent Owner's proposed construction is broader than that of Petitioner's because any transmission of play-list information during the bandwidth guarantee process would also be within the connection-establishment process. Because we determine, below, that the prior art teaches the limitation under either Petitioner's or Patent Owner's construction, it does not matter, for our decision, which construction we adopt. *See infra* Section III.D.3(f); Pet. Reply 3 (arguing that because Patent Owner's proposed construction is broader than Petitioner's, Patent Owner's arguments "have no bearing on the Petition"). Thus, under the circumstances, we need not construe the term explicitly.

C. Asserted Prior Art

1. Overview of Ueda

Ueda describes "[a] content providing device serving as a server for executing content providing processing as to a client," where "content which interests a user or commercial content can be selectively provided to the user." Ex. 1003, code (57). The main embodiment is in the context of a disc player (e.g., Blu-ray Disc player) in which the user is provided with fixed content defined by a playlist. *See id.* ¶¶ 5–7. Ueda addresses embodiments in which the fixed content on the disc "such as a commercial or the like is preferably changed to the latest commercial or latest preview information," or where, "even with a main content such as a movie content or the like, in a case wherein an update version . . . has been created after the release of a

disc, . . . the update version thereof is preferably provided to a user." *Id.* ¶ 11.

Figure 6, reproduced below, reflects Ueda's overall system.

FIG. 6

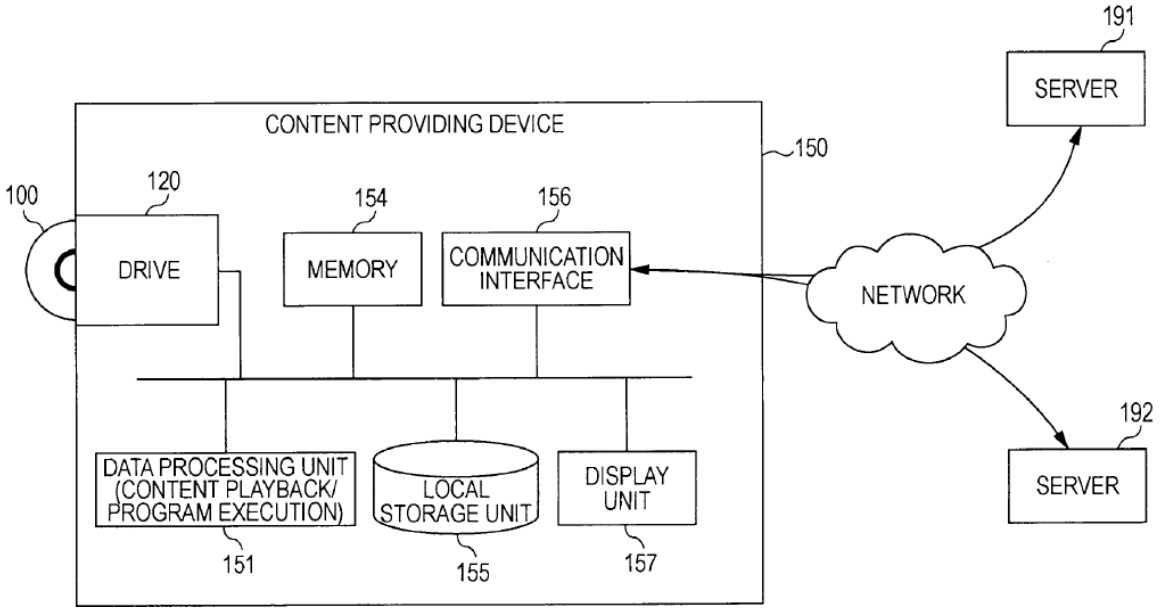

Figure 6 depicts content-providing device 150 which includes disc 100 and disk drive 120, display unit 157, and communication interface 156 for communicating through a network with servers 191 and 192. *See* Ex. 1003 ¶¶ 118–120. "The content providing device 150 obtains a sub content which is available along with playback of a content stored in the disk 100, for example, such as . . . commercial content . . . through servers 191 and 192." *Id.* ¶ 119. According to Ueda, "content to be downloaded from the server is not restricted to a commercial, and for example, a main content such as an AV stream content, . . . playlist," and control information "is downloaded in some cases." *Id.* ¶ 239.

2. *Whether Ueda Qualifies as Prior Art*

Petitioner argues that "Ueda was filed on September 19, 2008 [and thus] qualifies as prior art under at least pre-AIA 35 U.S.C. § 102(e)." Pet. 13 (citing Ex. 1003). Petitioner having made these allegations in the Petition, the burden of going forward shifted to Patent Owner to produce evidence that the claimed invention occurred before Ueda's priority date of September 19, 2008. *See Dynamic Drinkware*, 800 F.3d at 1379–80; *In re Magnum Oil Tools Int'l, Ltd.*, 829 F.3d 1364, 1375–76 (Fed. Cir. 2016). Such evidence may include "either an earlier reduction to practice, or an earlier conception followed by a diligent reduction to practice." *Purdue Pharma L.P. v. Boehringer Ingelheim GmbH*, 237 F.3d 1359, 1365 (Fed. Cir. 2001). The sufficiency of corroboration is determined according to a rule-of-reason analysis, where "all pertinent evidence is examined in order to determine whether the inventor's story is credible." *Fleming v. Escort Inc.*, 774 F.3d 1371, 1377 (Fed. Cir. 2014) (quoting *Sandt Tech., Ltd. v. Resco Metal & Plastics Corp.*, 264 F.3d 1344, 1350 (Fed. Cir. 2001)); *see also Price v. Symsek*, 988 F.2d 1187, 1195 (Fed. Cir. 1993).

Patent Owner contends that Ueda does not qualify as prior art because of an earlier conception and diligent reduction to practice: "[T]he inventors of the '427 Patent conceived of the invention on or before August 6, 2008, and worked diligently to reduce the invention to practice with the filing of Japan Patent Application No. 2008-294270 . . . on November 11, 2008, the '427 Patent's foreign priority document." PO Resp. 8.

(a) Conception of the Claimed Invention

For the alleged conception date of August 6, 2008, Patent Owner argues that the inventors prepared and conducted a presentation (Ex. 2012; Ex. 2013 (English translation)) on that date embodying the claimed invention. PO Resp. 9–17 (citing Ex. 2010 ¶ 18; Ex. 2011 ¶ 10, 19–20; Ex. 2014; Ex. 2015); *see also* PO Sur-reply 3–8.

Petitioner disagrees that the presentation on August 6, 2008, establishes conception, particularly for the dependent claims. Pet. 4–6.

We need not decide whether conception occurred before the filing date of Ueda, because we find that Patent Owner has not shown sufficiently corroborated evidence of diligence between the alleged conception of the claimed invention and its reduction to practice, as we explain below.

(b) Diligence and Constructive Reduction to Practice

Patent Owner argues that the inventors exercised diligence between the alleged conception date of August 6, 2008, and the constructive reduction to practice on November 18, 2008, when Patent Owner filed the Japanese patent application to which the ’427 patent claims priority. PO Resp. 17–19.

Patent Owner contends that, shortly after the presentation on August 6, 2008, primary inventor Kunihiro Taniguchi “began, in mid-August 2008, to draft a technical specification document setting out additional background and implementation details, including those already well known in the industry.” PO Resp. 17 (citing Ex. 2011 ¶ 12). Then, “[b]etween late August and the beginning of November 2008, he continued to draft and revise the specification document” while also fulfilling other responsibilities

at NEC and other research projects relating to IPTV, for which he received an award. *Id.* at 17–18 (citing Ex. 2011 ¶¶ 6, 13–14; Ex. 2024, 2; Ex. 2025; Ex. 2026; Ex. 2027, 1, 2).

Patent Owner argues that Mr. Taniguchi completed the draft Japanese patent application on November 6, 2008, and transmitted it the same day to attorneys at Baba International Patent Office. PO Resp. 18–19 (citing Ex. 2011 ¶¶ 14–15; Ex. 2016; Ex. 2022 ¶¶ 2–6; Ex. 2023 ¶ 4). According to Patent Owner, the law firm then diligently prepared the Japanese application and filed it on November 18, 2008. *Id.* at 19 (Ex. 2011 ¶ 16; Ex. 2018; Ex. 2019; Ex. 2023 ¶¶ 5–6). Patent Owner submits that application, including an English translation and a chart mapping each paragraph of the ’427 patent to the specification of the Japanese application. *Id.* (citing Ex. 2010 ¶ 23; Ex. 2020; Ex. 2021; Ex. 2028).

In its Reply, Petitioner argues that the only evidence of Mr. Taniguchi’s allegedly diligent work on the draft between August 6 and November 6, 2008, is his own uncorroborated testimony, which is insufficient to show reasonably continuous diligence in reducing the claimed invention to practice. Pet. Reply 7 (citing *Arctic Cat Inc. v. GEP Power Prods., Inc.*, 919 F.3d 1320, 1331, 32 (Fed. Cir. 2019); *Shu-Hui Chen v. Bouchard*, 347 F.3d 1299 (Fed. Cir. 2003); *In re Jolley*, 308 F.3d 1317, 1328 (Fed. Cir. 2002); *Loral Fairchild Corp. v. Victor Co. of Japan, Ltd.*, 931 F. Supp. 1014, 1030 (E.D.N.Y. 1996)). According to Petitioner, the only corroborating evidence during that time frame relates to Mr. Taniguchi’s work on other products related to IPTV, which is not related to work on the draft application. Pet. Reply 8–9 (citing *Naber*, 567 F.2d 382, 385–86 (C.C.P.A. 1977)).

In its Sur-reply, Patent Owner argues that it need not show that Mr. Taniguchi worked exclusively on the ’427 patent disclosure during the critical time period. PO Sur-reply 8–9 (citing *Monsanto Co. v. Mycogen Plant Sci., Inc.*, 261 F.3d 1356, 1369 (Fed. Cir. 2001); *Artic Cat v. GEP Power*, 919 F.3d at 1331; *Perfect Surgical Techs. v. Olympus Am., Inc.*, 841 F.3d 1004, 1009 (Fed. Cir. 2016)). Patent Owner also argues that Mr. Taniguchi’s duties at NEC and work on related IPTV projects should count as circumstantial, independent corroborating evidence because it “show[s] third party recognition of his contributions and work.” *Id.* at 9 (citing Ex. 2011 ¶¶ 12–13; Ex. 2024, 12, 22; Ex. 2026; *Jolley*, 308 F.3d at 1328 (“Corroboration may be established by ‘sufficient circumstantial evidence of an independent nature’”)).

Patent Owner also argues that there is corroboration that Mr. Tanaguchi was diligent by at least November 6, 2008, when he prepared and transmitted the draft application to the Baba law firm. PO Sur-reply 9–10 (citing Ex. 2011 ¶¶ 13, 15; Ex. 2023; Ex. 2018; Ex. 2019; Ex. 2022 ¶¶ 6–7; Ex. 2023 ¶ 4). Patent Owner contends that we can infer that Mr. Taniguchi must have been diligently working on the specification before November 6 because it is “a complicated technical document that would require significant time to write in view of Mr. Taniguchi’s otherwise busy work schedule, . . . and by the fullness of Mr. Taniguchi’s draft even before work by patent attorneys.” *Id.* at 10–12 (citing Ex. 2016; Ex. 2017; Ex. 2023 ¶ 4).

Having considered all the evidence of record relating to Mr. Taniguchi’s activities during the relevant time frame, we find that Patent Owner has not produced sufficient corroborating evidence to show that Mr. Taniguchi’s work on reducing to practice the claimed invention was

reasonably continuous during the critical period between September 19, 2008 (the filing date of Ueda), and November 18, 2008 (the filing date of the Japanese patent application). Although there is corroborating evidence of diligence beginning on November 6, 2008, when Mr. Taniguchi transmitted a draft application to the Baba law firm, there is no evidence of any diligence prior to that date, other than Mr. Taniguchi's own testimony.

We do not agree with Patent Owner that the evidence of Mr. Taniguchi's other activities for NEC, or research relating to IPTV, corroborate Mr. Taniguchi's reduction to practice of the *claimed invention*. Although these activities may have something to do with the general subject matter of IPTV, Patent Owner has not shown any nexus between these activities and the challenged claims. *See Naber v. Cricchi*, 567 F.2d at 385 ("It is well settled that, to satisfy the 'reasonable diligence' requirement . . . , the work relied on must ordinarily be directly related to reduction to practice of the invention . . . in issue." (citing cases)).

Although Mr. Taniguchi doubtlessly spent substantial time preparing the application he completed on November 6, 2008 (*see* Ex. 2017), there is no corroborating evidence that this work was reasonably continuous during the critical period. As far as the corroborating evidence attests, Mr. Taniguchi could have done no work on the draft until early November, or he could have worked on the draft briefly in August and put it aside until early November.

Considering all the evidence as to Mr. Taniguchi's activities, we find that Patent Owner has not met its burden of producing corroborating evidence that the named inventors of the '427 patent exercised reasonably continuous diligence during the critical period when Ueda was filed until the

constructive reduction to practice that occurred on November 18, 2008. Therefore, we determine, by a preponderance of the evidence, that Ueda is prior art to the challenged claims.

3. Overview of the SIP Standard

The SIP Standard is "an application-layer control (signaling) protocol for creating, modifying, and terminating sessions with one or more participants," including "multimedia distribution." Ex. 1004, 1. The standard "makes use of elements called proxy servers to help route requests to the user's current location, authenticate and authorize users for services, . . . and provide features to users." *Id.* It is designed to "run[] on top of several different transport protocols." *Id.* Such transport protocols may include "Real-time Transport Protocol (RTP) . . . for transporting real-time data and providing QoS [quality of service] feedback, the Real-Time streaming protocol (RTSP) . . . for controlling delivery of streaming media, . . . and the Session Description Protocol (SDP) . . . for describing multimedia sessions." *Id.* at 9–10.

Some of the basic functions of the SIP Standard are "location of an end point, signal of a desire to communicate, negotiation of session parameters to establish the session, and teardown of the session once established." Ex. 1004, 11. Figure 1, reproduced below, depicts the process of establishing and tearing down a session (in this case a telephone call) between "Alice's softphone" on a computer and "Bob's SIP Phone" via two proxy servers, one in Atlanta where Alice is located, and the other in Biloxi where Bob is located:

```
                 atlanta.com  . . . biloxi.com
            .      proxy              proxy     .
          .                                      .
  Alice's  . . . . . . . . . . . . . . . . . . . .  Bob's
 softphone                                        SIP Phone
    |                 |                 |                |
    |    INVITE F1    |                 |                |
    |--------------->|    INVITE F2    |                |
    |  100 Trying F3 |--------------->|    INVITE F4    |
    |<---------------|  100 Trying F5 |--------------->|
    |                |<-------------- | 180 Ringing F6 |
    |                | 180 Ringing F7 |<---------------|
    | 180 Ringing F8 |<---------------|     200 OK F9  |
    |<---------------|    200 OK F10  |<---------------|
    |    200 OK F11  |<---------------|                |
    |<---------------|                 |                |
    |                       ACK F12                     |
    |------------------------------------------------->|
    |                    Media Session                  |
    |<=================================================>|
    |                       BYE F13                     |
    |<-------------------------------------------------|
    |                      200 OK F14                   |
    |------------------------------------------------->|
    |                                                   |
```

Figure 1: SIP session setup example with SIP trapezoid

Alice and Bob refer to each other using their respective SIP URI (Uniform Resource Identifier) identities, such as "sip:alice@atlanta.com" and "sip:bob@biloxi.com," which are similar to email addresses. Ex. 1004, 11–12. As depicted above in Figure 1, "the transaction begins with Alice's softphone sending an INVITE request addressed to Bob's SIP URI." *Id.* This INVITE request "specifies the action that the requestor (Alice) wants the server (Bob) to take," and "contains a number of header fields" including "a unique identifier for the call, the destination address, Alice's address, and information about the type of session that Alice wishes to establish with Bob." *Id.*

"Since the softphone does not know the location of Bob or the SIP server in the biloxi.com domain, the softphone sends the INVITE to the SIP server that serves Alice's domain, atlanta.com." Ex. 1004, 14. The

atlanta.com SIP server forwards the request to the biloxi.com proxy server, which in turn forwards it to Bob's SIP phone, who can choose to answer. *Id.* Meanwhile, "100 Trying" and "180 Ringing" messages are returned to indicate, respectively, that the proxy servers are trying to connect or that Bob's phone is ringing. *Id.* at 14–15. When Bob answers the call, a "200 OK" message is returned, through the proxy servers, and after a direct acknowledgement ("ACK") that bypasses the proxy servers, "Alice and Bob's media session has now begun, and they send media packets using the format to which they agreed in the exchange of SDP." *Id.* at 14–16. "At the end of the call, Bob disconnects (hangs up) first and generates a BYE message. This BYE is routed directly to Alice's softphone, again bypassing the proxies. Alice confirms receipt of the BYE with a 200 (OK) response, which terminates the session and the BYE transaction." *Id.* at 17.

According to the SIP Standard, if a proxy server receives a "6xx" response, the "proxy SHOULD cancel all client pending transactions." Ex. 1004, 109. One such "6xx" response is "606 Not Acceptable," which means that "[t]he user's agent was contacted successfully but some aspects of the session description such as the requested media, bandwidth, or addressing style were not acceptable." *Id.* at 192. The response can contain "a Warning header field describing why the session described cannot be supported." *Id.* For example, the Warning field can be "370 Insufficient bandwidth," meaning that "[t]he bandwidth specified in the session description or defined by the media exceeds that known to be available." *Id.* at 182.

The SIP Standard, itself, does not describe "[t]he details of the session, such as the type of media, codec, or sampling rate," but "the body of

a SIP message contains a description of the session, encoded in some other protocol format" such as "Session description Protocol (SDP)," and "is carried by the SIP message in a way that is analogous to a document attachment being carried by an email message." Ex. 1004, 13–14; *see also* Ex. 1005, 4.

4. Overview of the SDP Standard

The SDP Standard "describ[es] multimedia sessions for the purposes of session announcement, session invitation, and other forms of multimedia session initiation." Ex. 1005, 1. SDP syntax can, for example, describe "an appropriate set of parameters for media delivery" between "[a]n RTSP client and server." *Id.* at 4. An SDP description of a session can "denote[] the proposed bandwidth to be used by the session or media," which may be a "proposed upper limit to the bandwidth used" by multiple RTP sessions or the "session bandwidth" as defined by the RTP standard. *Id.* at 16. An SDP session description may also include specific information about the media stream such as names, titles, addresses, or attributes. *See id.* at 9. It was understood at the time of the claimed invention that an SDP description could also convey the order in which multiple streams are presented within a session. *See* Ex. 1011, 3.

5. Overview of Cohee

Cohee describes a system for publishing video ads on web pages. Ex. 1007, code (57). An embodiment is shown in Figure 1, reproduced below:

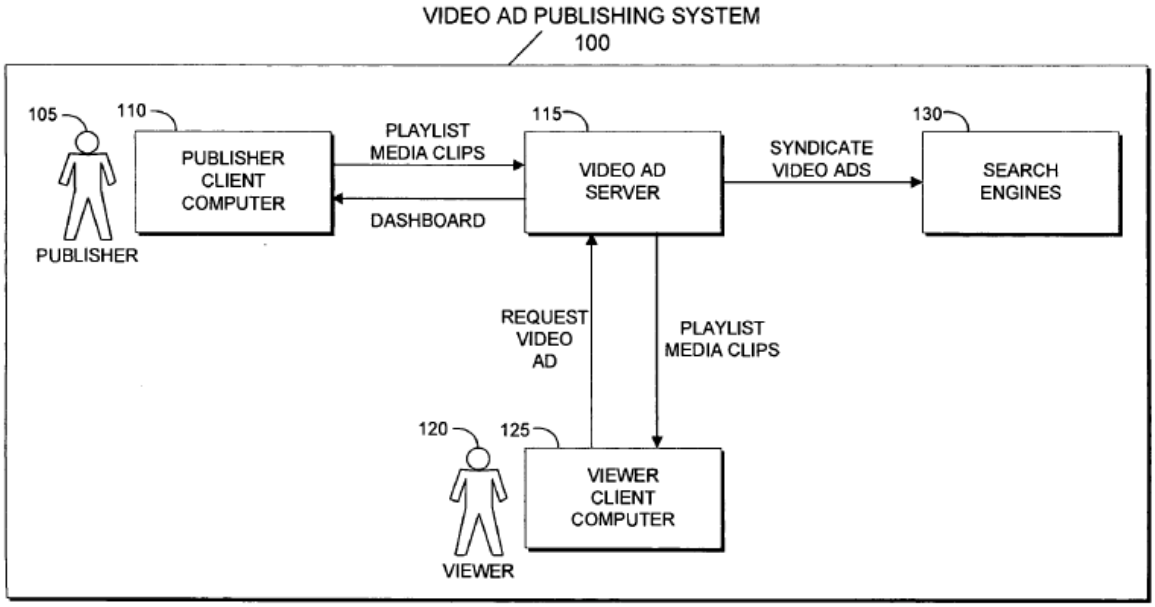

FIG. 1

Figure 1 shows video ad publishing system 100. Ex. 1007 ¶ 37. It depicts publisher 105 using an "editor" application to create and publish to video ad server 115 a video ad and "a playlist that includes the instructions for rendering separately stored media clips together with information such as text overlays and timing to create and play a video ad." *Id.* Video ad server 115 makes the playlist and video ad to viewer 120 via viewer client computer 125. *Id.* Publisher 105 also has the option of syndicating the video ad to video search engines 130. *Id.*

D. GROUND BASED ON UEDA AND THE SIP AND SDP STANDARDS (CLAIMS 1, 4–9, 14, 16, 18, 20, 22, 32, AND 34–36)

In its first ground, Petitioner argues that claims 1, 4–9, 14, 16, 18, 20, 22, 32, and 34–36 are unpatentable under § 103(a) as obvious over Ueda in view of the SIP and SDP Standards. Pet. 3, 22–72.

A claim is unpatentable under § 103(a) if the differences between the claimed subject matter and the prior art are "such that the subject matter as a whole would have been obvious at the time the invention was made to a person having ordinary skill in the art to which said subject matter pertains." *KSR Int'l Co. v. Teleflex Inc.*, 550 U.S. 398, 406 (2007). When a ground in a petition is based on a combination of references, we consider "whether there was an apparent reason to combine the known elements in the fashion claimed by the patent at issue." *Id.* at 418 (citing *In re Kahn*, 441 F.3d 977, 988 (Fed. Cir. 2006)).

We base our obviousness inquiry on factual considerations including (1) the scope and content of the prior art, (2) any differences between the claimed subject matter and the prior art, (3) the level of skill in the art, and (4) any objective indicia of obviousness or non-obviousness that may be in evidence. *See Graham*, 383 U.S. at 17–18.

Considering these factors,[8] we determine that Petitioner has shown by a preponderance of the evidence that claims 1, 4–9, 14, 16, 18, 20, 22, 32, and 34–36 are unpatentable as obvious over Ueda in view of the SIP and SDP Standards, for the reasons explained below.

---

[8] Neither party argues that there are objective indicia of obviousness or non-obviousness, so this factor is not part of our analysis. *See* Pet. 84 (stating that Petitioner "is unaware of any secondary considerations of non-obviousness); PO Resp. (not raising any objective indicia of non-obviousness).

1. General Motivation to Combine Ueda and the SIP Standard

Petitioner argues that a person of ordinary skill in the art "would have been motivated to combine SIP Standard with Ueda in order to provide intermediating resources for media sessions between agents," which would "assist content providing device 150 with locating server 191 on the Internet, signaling its desire to communicate with server 191, and characterizing the communication session." Pet. 22–23 (citing Ex. 1004, 1, 8–9, 11; Ex. 1008 ¶ 104). According to Petitioner, the SIP Standard provides "well-known techniques . . . to improve the operation of Ueda and yield a predictable result of establishing a media session between agents." Pet. 23 (citing Ex. 1008 ¶ 105; Ex. 1010, 3).

Alternatively, Petitioner argues that it would have been obvious "to substitute a known element in the form of the authentication processing unit from Ueda's server 191 with another known element in the form of the proxies of SIP Standard." Pet. 23 (Ex. 1004, 1, 10, 37; Ex. 1008 ¶ 106).

In response, Patent Owner argues that "the Petition fails to provide a motivation to combine adequate to justify combining the references as proposed," in part because "Ueda already provides for the alleged 'advantages' and Petitioner provides no reason why a [person of ordinary skill in the art] would have abandoned these techniques and gone through the effort to replace them with techniques from a different reference." PO Resp. 21–22 (emphasis omitted) (citing Ex. 2001 ¶¶ 66–67; *Intelligent Bio-Sys., Inc. v. Illumina Cambridge Ltd.*, 821 F.3d 1359, 1367 (Fed. Cir. 2016); *Hulu, LLC v. Sound View Innovations, LLC*, IPR2018-00582, Paper 34 at 22 (PTAB Aug. 5, 2019) (informative)).

In general, we disagree with Patent Owner that, in showing a reason to incorporate the SIP Standard's teachings about proxy servers, Petitioner must necessarily show that Ueda's system was deficient or inferior. A patent challenger "does not need to show that there was a known problem with the prior art system in order to articulate the required rational underpinning for the proposed combination." *Unwired Planet, LLC v. Google Inc.*, 841 F.3d 995, 1002–03 (Fed. Cir. 2016). Also, "when a patent claims a structure already known in the prior art that is altered by the mere substitution of one element for another known in the field, the combination must do more than yield a predictable result." *KSR*, 550 U.S. at 416.

For this reason and the specific reasons discussed below, we find Patent Owner's arguments unpersuasive. The evidence of record suggests that it would have been within the ordinary skill in the art to modify Ueda's system by replacing direct communication between content-providing device 150 and servers 191 or 192 with an indirect connection in the form of proxy servers using well-known, predictable techniques as described in the SIP Standard.

Patent Owner alleges a number of specific issues with Petitioner's asserted combination of Ueda and the SIP Standard. PO Resp. 22–28. We address these arguments below.

(a) <u>Locating Servers</u>

First, Patent Owner argues that Ueda's content providing device 150 already knows the location of server 191, so there would have been no motivation to incorporate the SIP Standard's facilities for locating servers. PO Resp. 22–25 (citing Ex. 1003 ¶¶ 126–132, 228, 230, Fig. 15; Ex. 2001 ¶¶ 67–70). In particular, Patent Owner argues that in Ueda, the URL (i.e., the

location) of server 191 is stored on disc 100 and thus predetermined "before any internet connectivity occurs." *Id.* at 24–25 (citing Ex. 1003 ¶¶ 127–132; Ex. 2001 ¶¶ 68–70). Thus, according to Patent Owner, Ueda's content providing device 150 could have obtained server 191's IP address through well-known DNS lookup rather than using a SIP proxy server, which would have been unnecessary and would have introduced new problems to solve. *Id.* at 25 (citing Ex. 1003 ¶¶ 126, 230; Ex. 2001 ¶¶ 67–69).

Petitioner disagrees that Ueda teaches pulling URLs from disc 100 or linking with one specific, predetermined server. Pet. Reply 10. Rather, Petitioner argues that Ueda is compatible with "using the network (such as through SIP servers) to obtain that URL" and "responding to requests from multiple 'users of the general public,' [rather than] one single user with one single disc." *Id.* (quoting Ex. 1003 ¶ 357) (citing Ex. 2029, 94:16–95:10).

Petitioner argues that Dr. Cooperstock admitted on cross-examination that it is often a preferred solution to use a more distributed solution for a server architecture "as opposed to trying to get one big, super expensive machine that would have the capacity for handling all of that [traffic]," because "[a]s you scale up to large numbers of streams or large numbers of receivers, it generally becomes more cost effective to consider replication of data over multiple machines, multiple transmitters, multiple different locations where the servers can be housed, to position them closer to some of the receiver communities." Pet. Reply 10–11 (alterations in original) (quoting Ex. 1017, 35:18–36:6). Thus, according to Petitioner, a person of ordinary skill in the art would have understood that the URL may be accessed through "an 'intermediating resource for [providing] media

sessions between agents,' such as by using SIP servers." *Id.* at 11 (alteration in original) (quoting Ex. 1008 ¶ 104).

Further, Petitioner argues that Ueda "teaches the motivation to utilize a more flexible process" than "pulling the URL of a solitary server responsible [for] handling all traffic from local disc memory." Pet. Reply 11 n.2 (citing Ex. 1003 ¶¶ 11 (recognizing the benefit of not being limited to media content stored on a disc), 144 (stating that allowing an application to be "obtained from a disc or the server as appropriate" increases flexibility)). And Petitioner argues that Ueda's Figure 6 depicts connections to more than one server (191 and 192) rather than just a single server at a hard-coded URL. Pet. Reply 10–11 (citing Ex. 1003 ¶ 119, Fig. 6; Ex. 2029, 87:11–14).

We find Petitioner's arguments persuasive, and agree with Petitioner that a person of ordinary skill in the art would have been motivated to incorporate well-known proxy servers to add flexibility to the way Ueda locates content servers. We disagree with Patent Owner that Ueda's disclosure is limited to hard-coding URLs onto disc 100. Although Ueda teaches "[p]rocessing for providing a URL to be accessed," which is "executed before connecting with the server [191 or 192]," Patent Owner has not pointed to anything in Ueda that precludes the use of a proxy server to provide a URL before connecting with servers 191 or 192. *See* Ex. 1003 ¶¶ 128–134. However, even if Ueda teaches the use of a hard-coded URL on disc 100, a person of ordinary skill in the art would have had reason to replace this brittle system with a more flexible approach using proxy servers according to the SIP Standard.

(b) Signaling a Desire to Communicate

Next, Patent Owner argues that there would have been no motivation to use SIP messages in Ueda's system to signal a desire to communicate with server 191. PO Resp. 25–26. According to Patent Owner, "incorporating the SIP Standard . . . would only introduce incompatibilities with Ueda's existing approach." *Id.* (citing Ex. 2001 ¶ 69). Patent Owner contends that, whereas Ueda provides for downloading content management applications directly from an already-identified server and running them on the user's device, "SIP does not support the downloading of content management applications from a server that are 'executed at the time of recording download data,' . . . . Thus, an attempt to replace Ueda's signaling techniques with SIP would fail." *Id.* at 26 (citing Ex. 1003 ¶¶ 121–141; Ex. 2001 ¶ 69).

Moreover, according to Patent Owner, in the SIP standard the user "will *directly* specify the media stream of interest," unlike in Ueda, where the "server determines what content management application to provide . . . based on identification information transmitted to the server from the user and, for example, by 'content usage condition information corresponding to a contentID or user ID.'" PO Resp. 26 (quoting Ex. 1003 ¶¶ 147–148) (citing Ex. 2001 ¶ 69).

In its Reply, Petitioner counters that "[p]roving obviousness does not require the exhaustive level of granularity that [Patent Owner] demands," and a person of ordinary skill in the art "would have generally looked to and found benefit in incorporating widely accepted Internet standards, such as SIP." Pet. Reply 12 (citing Ex. 1008 ¶ 105). Petitioner argues, in particular, that Dr. Cooperstock admitted on cross-examination that "SDP (which may

be used to provide media description details in SIP) expressly contemplates that applications may be sent as part of a [SIP] session." *Id.* (citing Ex. 1017, 82:11–18).

Petitioner also argues that Ueda's disclosure about how the content management application is selected has no bearing on how Ueda's system might specify the media stream of interest, because Ueda's content management application "merely 'displays the allowed processing' to the user based on the specification of media content *already* sent to the server ('content ID') and a user ID, for example in the case of requiring payment processing." Pet. Reply 12–13 (quoting Ex. 1003 ¶ 150) (citing Ex. 1003 ¶¶ 148–150).

In its Sur-reply, Patent Owner argues that, in its Petition, Petitioner did not rely on the SDP Standard to show that a person of ordinary skill in the art would have had a reason to use the SIP Standard for signaling a desire to communicate. PO Sur-reply 12–13.

We find Petitioner's argument persuasive, and disagree with Patent Owner that modifying Ueda by using SIP to signal a desire to communicate would have introduced incompatibilities. First, we find nothing in the SIP Standard, or in the record as a whole, suggesting that the use of proxy servers or SIP messages requires a user to specify a media stream of interest directly, or that it is infeasible for the content-selection process to involve downloading and executing an application from the server. Indeed, the evidence of record shows that a person of ordinary skill in the art would have understood that the SIP Standard can be used, successfully, to indicate that an application is to be downloaded from a server. *See* Ex. 1017, 82:11–18; Ex. 1005, 22.

(c) Characterizing Communication Session

Next, Patent Owner argues that "characterizing the communication session" would not have been a motivation to modify Ueda because Ueda already accomplishes this without using proxy servers or the SIP Standard: content providing device 150 transmits a pre-selected identifier (stored on the disc) to server 191, which uses the identifier to determine whether to send new commercial content. PO Resp. 27 (citing Ex. 1003 ¶¶ 221–230, Fig. 15). According to Patent Owner, using the SIP Standard for this process would have "introduce[d] incompatibilities that would either stop Ueda from working, or would require additional redesign effort, all of which cautions against combining the references as Petitioner has proposed." *Id.* at 27–28 (citing Ex. 2001 ¶ 71; *South-Tek Sys., LLC v. Engineered Corrosion Sols., LLC*, 748 F. App'x 1003, 1007 (Fed. Cir. 2018)).

In its Reply, Petitioner argues that the "SIP Standard provides countless ways to help characterize a communication session, including at least forty-four different metadata fields." Pet. Reply 13 (citing Ex. 1004, 159–82). For example, Petitioner contends that the SIP Standard discloses a "priority" header to prioritize a request, which Ueda does not disclose, and that a person of ordinary skill in the art would have considered such characterizations to be beneficial. *Id.* at 13–14 & n.3 (citing Ex. 1004, 174; Ex. 1008 ¶ 104).

The evidence of record does not suggest that characterizing communication sessions using SIP would have introduced any incompatibilities with Ueda's system. The SIP Standard describes itself as "an agile, general-purpose tool for creating, modifying, and terminating sessions that works . . . without dependency on the type of session that is

being established." Ex. 1004, 9. To the extent that any problems were to arise in using well-known SIP headers to characterize communication sessions in Ueda's system, we determine that addressing these problems would have been within the level of ordinary skill in the art.

(d) Security Services

Next, Patent Owner argues that a person of ordinary skill in the art would not have turned to the SIP Standard to authenticate or authorize users because "Ueda either 1) already has a security mechanism in place or 2) operates without any need for further verification/authentication." PO Resp. 28–29 (citing Ex. 1003 ¶¶ 340, 344, 354, 360, 365, Fig. 25; Ex. 2001 ¶¶ 73–75).

In its Reply, Petitioner argues that the SIP Standard discusses security considerations extensively, and a person of ordinary skill in the art "would clearly understand that the user authentication processes described in Ueda would benefit from well-established methods of responding to security concerns from globally adopted standards such as SIP Standard." Pet. Reply 14 (citing Ex. 1008 ¶ 106).

We find Petitioner's argument persuasive. Both Ueda and the SIP Standard express a concern for security, and a person of ordinary skill in the art would have looked to the teachings of the SIP Standard to improve security in Ueda's system. *See* Ex. 1003 ¶¶ 340–368, Figs. 24, 25; Ex. 1004, 232–252.

(e) Reasonable Expectation of Success

Finally, Patent Owner argues that Petitioner has failed to explain, in a non-conclusory way, why a person of ordinary skill in the art modifying

Ueda with the teachings of the SIP Standard would reasonably have expected the combination to succeed in achieving the claimed invention. PO Resp. 29 (citing *Johns Manville Corp. v. Knauf Insulation, Inc.*, IPR2018-00827, Paper 9 at 13 (PTAB Oct. 16, 2018) (informative); *Intelligent Bio-Sys.*, 821 F.3d at 1367–68).

In its Reply, Petitioner argues that Patent Owner "simply ignores Dr. Reader's explanation of how a [person of ordinary skill in the art] would expect to successfully integrate DIP with Ueda, which relies extensively on the references themselves." Pet. Reply 14 n.4 (citing Ex. 1008 ¶¶ 104–107).

We deem Petitioner's showing of a reasonable expectation of success to be sufficient, given the well-known and predictable nature of the SIP Standard, the degree of predictability within the relevant art, and the level of ordinary skill to which the parties have agreed. *See supra* Section III.A.

2. *General Motivation to Combine Ueda with the SIP and SDP Standards*

Petitioner argues that a person of ordinary skill in the art "would have been motivated to combine the SDP Standard with Ueda and the SIP Standard to convey media details, transport addresses, and other metadata to participants for initiating multimedia sessions," as the SIP and SDP Standards themselves teach. Pet. 24 (citing Ex. 1004, 1, 10; Ex. 1005, 1, 4, 5, 13–15; Ex. 1008 ¶¶ 109–110).

In response, Patent Owner argues that even if Petitioner has shown a reason to incorporate the SDP Standard into SIP messages, Petitioner has not explained, in a non-conclusory way, why a person of ordinary skill in the art "would choose to modify Ueda with SDP" because Ueda already contemplates providing the information that SDP would provide. PO Resp.

30 (citing Ex. 1003 ¶ 16; Ex. 2001 ¶¶ 77, 80). Patent Owner points to disclosures in Ueda that allegedly convey media details, transport addresses, and other metadata without using the SDP Standard. *Id.* at 31–33 (citing Ex. 1003, Fig. 30; Ex. 2001 ¶¶ 80–81; *South-Tek Sys.*, 748 F. App'x at 1007). According to Patent Owner, Petitioner has shown no more than that the combination is possible, not that a skilled artisan would have made the combination. PO Resp. 32–33 (citing *Belden Inc. v. Berk-Tek LLC*, 805 F.3d 1064, 1073 (Fed. Cir. 2015); *Virtek Vision ULC v. Assembly Guidance, Inc.*, 97 F.4th 882 (Fed. Cir. 2024)).

Patent Owner also argues that "[t]he Petition contains no discussion or even suggestion of how the proposed combination of Ueda with SIP and SDP would affect the functioning of Ueda, which clearly contemplates a direct connection between the user's device 150 and the server 191, without the need for proxy/intermediate servers." PO Resp. 33 (citing Ex. 1003, Figs. 6, 7, 17–19, 21, 24, 26, 29, 30). Also, according to Patent Owner, "Petitioner's expert fails to provide any details about 'a reasonable expectation of success in intermediating a media session between Ueda's server 191 and the content providing device 150 of Ueda,' but only giving a conclusory statement." *Id.* at 33–34 (citing Ex. 1008 ¶ 107; *Pfizer, Inc. v. Apotex, Inc.*, 480 F.3d 1348, 1361 (Fed. Cir. 2007)).

In its Reply, Petitioner argues that the "SDP Standard is a widely adopted IETF protocol that teaches additional means of 'convey[ing] media details, transport addresses, and other session description metadata' for a multimedia session" and a person of ordinary skill in the art would "recognize the benefit of leveraging SDP and SIP with Ueda to help characterize a session between parties." Pet. Reply 15 (alteration in original)

(quoting Ex. 1008 ¶ 110). Petitioner also disagrees that Ueda contemplates a direct connection between content-providing device 150 and server 191, because Figure 6 depicts that connection as a cloud, "which is a common way of illustrating diverse heterogenous networks." *Id.* at 16 n.5 (quoting Ex. 2029, 87:11–14). According to Petitioner, Ueda "does not explicitly describe the intermediate elements between device 150 and server 191," and a person of ordinary skill in the art would have "look[ed] to SIP Standard and SDP Standard as a means of providing these resources," which is not redundant of anything in Ueda's unmodified system. *Id.* at 16.

In its Sur-reply, Patent Owner argues that Petitioner has not done more than allege that a person of ordinary skill "*could have* modified the various fields of the SDP Standard," and has not met its burden to show a reason to combine the SDP Standard with Ueda and the SIP Standard based on "any suggestion within the references themselves." PO Sur-reply 13–15 (citing *Pfizer v. Apotek*, 480 F.3d at 1361; *Rouffet*, 149 F.3d at 1355; *InTouch Techs., Inc. v. VGo Commc'ns, Inc.*, 751 F.3d 1327, 1352 (Fed. Cir. 2014)).

As we discuss above in the context of the combination of Ueda with the SIP Standard, the evidence shows that a person of ordinary skill in the art would have been able to successfully incorporate Ueda's media details, transport addresses, and other metadata into SIP descriptions, and the SDP Standard provides a specific way of doing so. *See supra* Section III.D. Petitioner has shown that the SIP and SDP Standards explicitly teach their mutual interoperability. *See* Pet. 17–18 (citing Ex. 1004, 1, 10; Ex. 1005, 1, 4–5, 8–9, 16); *see also* Ex. 1004, 13–14 (explaining that an SDP description can be included in the body of a SIP message).

Further, Petitioner has persuasively shown that a person of ordinary skill in the art would have had reason to incorporate the teachings of the SDP Standard into the Ueda–SIP Standard combination, for the reasons provided by Petitioner.

3. Claim 1

Below, we address the parties' specific arguments regarding independent claim 1.

(a) Preamble

The preamble of claim 1 recites "[a] content delivery system comprising" certain steps. Ex. 1001, 36:56.

Petitioner argues that Ueda discloses a content delivery system. Pet. 25–26 (citing Ex. 1003 ¶¶ 37, 117–119, Fig. 6; Ex. 1008 ¶¶ 115–117).

Patent Owner does not contest this. *See* PO Resp. For the reasons given in the Petition, we agree that Ueda discloses a content delivery system, so we need not decide whether the preamble is limiting. *See, e.g.*, Ex. 1003, 23, claim 6 ("A content providing system . . . .").

(b) Limitation 1a

Limitation 1a recites "an application server system." Ex. 1001, 36:56–57. Petitioner argues that Ueda's server 191 is part of an application server system as recited. Pet. 26–27 (citing Ex. 1003 ¶¶ 122, 151–155, Figs. 6, 7, 17, 19, 24, 30–33; Ex. 1008 ¶¶ 118–121).

Patent Owner does not contest this. *See* PO Resp. For the reasons given in the Petition, we agree with Petitioner that Ueda discloses an "application server system." *See, e.g.*, Ex. 1003, Fig. 7.

(c) Limitation 1b

Limitation 1b recites "one or more connection control servers, the one or more connection control servers being configured to receive equipment specification information transmitted by a user equipment and establish a connection between the application server system and the user equipment based on the received equipment specification information." Ex. 1001, 36:57–63.

Petitioner argues that Ueda teaches limitation 1b in view of the SIP Standard. Pet. 27–34. In particular, Petitioner argues that "equipment specification information" in Ueda corresponds at least to a user ID and content providing device ID, which content providing device 150 (the alleged "user equipment") transmits to server 191 (the alleged "application server system"). Pet. 27–29 (citing Ex. 1003 ¶¶ 147–148, 169, 243, 258, 275, 343–345, 374, 380, 388–389, 435, 441, Figs. 7, 24, 26–28, 30). Petitioner also argues that Ueda discloses that the connection between content providing device 150 and server 191 is *based on* the alleged equipment specification information because "[t]his connection is established 'as a condition that the validity of the disc or the validity of the content providing device has been confirmed.'" Pet. 29–31 (quoting Ex. 1003 ¶ 345[9]) (citing Ex. 1003 ¶¶ 118–119, 147–148, 169, 243, 258, 275, 343–344, 374, 380, 388, 389, 435, 441, Figs. 6, 24, 26–28, 30).

Apart from Patent Owner's disagreement with Petitioner's proposed construction for the term *equipment specification information*, which we

[9] Petitioner mistakenly cites paragraph 344 as the quotation source.

address above, Patent Owner does not specifically contest the above arguments at this stage. *See supra* Section III.B.1; PO Resp.

Even without adopting Petitioner's proposed construction, we find Petitioner's argument sufficiently persuasive. Taken at face value, the term *equipment specification information* would encompass identifiers or other information that specifies which equipment, or which user's equipment, is requesting a connection with an application server system. And a person of ordinary skill in the art would have understood that server 191 establishes this connection based on authentication conditions that take into consideration the user ID or equipment ID. *See* Ex. 1003 ¶¶ 343–345.

Limitation 1b also requires one or more "connection control servers" to make the connection between the application server system and the user equipment. Ex. 1001, 36:57–63. Petitioner relies on the teachings of the SIP Standard for this aspect of the limitation. *See* Pet. 31–34. According to Petitioner, the SIP Standard teaches the use of proxy servers between two endpoint devices (such as user equipment and a server). Pet. 31–33 (citing Ex. 1004, 1, 9, 11–12, 15–16, 77–86, Fig. 1). Petitioner argues that the SIP proxy servers establish the connection based on logical addresses or identities transmitted from the user equipment. Pet. 33 (citing Ex. 1001, Fig. 9; Ex. 1004, 11–12, 35, 37). Petitioner contends that it would have been obvious to replace Ueda's direct connection with a proxy-mediated connection as the SIP Standard teaches, for the reasons addressed above. Pet. 33 (citing Ex. 1008 ¶ 141); *See supra* Section III.D.1. According to Petitioner, in this combination the user ID or equipment ID from content providing device 150 would serve the role of the logical identifiers used in

the SIP Standard for establishing a connection. Pet. 33–34 (citing Ex. 1008 ¶ 141).

We address Patent Owner's general arguments about the motivation to combine above, and we determine that a person of ordinary skill in the art would have had reasons to combine Ueda with the teachings of the SIP Standard. *See supra* Section III.D.1. Petitioner persuasively shows that introducing proxy servers in the context of limitation 1b would have been straightforward, predictable, and within the level of ordinary skill in the art to which the parties have agreed. Thus, we determine that Ueda teaches limitation 1b in view of the SIP Standard.

(d) Limitations 1c–1e

Limitation 1c recites "the application server system comprising: a memory for storing sub content data representing sub content and main content data representing main content." Ex. 1001, 36:64–67. Petitioner argues that Ueda discloses this limitation, and points to memory within server 191 that stores sub content (e.g., commercials) and main content (e.g., movies). Pet. 34–37 (citing Ex. 1003 ¶¶ 119, 146, 150, 241, 245, 248, 259, 271–273, 276–277, 413, 438–439, 443, Figs. 17, 19, 24, 30). Petitioner also argues that the embodiments describing the storage of main and commercial content are part of the same system, or alternatively that a person of ordinary skill in the art would have stored both main and commercial content in the same server. Pet. 37–38. According to Dr. Reader, this would have allowed server 191 to "control which processing the content providing device 150 is allowed to perform based on an identification of the user or the user equipment," or to "authenticate the validity of the content providing device 150 based on such an identification." Ex. 1008 ¶ 155.

Limitation 1d recites "a first receiver for receiving a content delivery request transmitted by the user equipment and containing main content identification information for identifying the main content." Ex. 1001, 37:1–4. According to Petitioner, Ueda teaches that content providing device 150 sends a download request (content delivery request), and that server 191 would necessarily have a receiver to receive this request. Pet. 39 (citing Ex. 1003 ¶¶ 118, 244, 259, 276, 279, 299, 344, 370, 372, 385–388, 438, 485, 509, 529, Fig. 6; Ex. 1008 ¶ 160). Petitioner also argues that Ueda's content delivery request necessarily includes information that identifies main content, "[o]therwise, server 191 would not know which main content to transmit." Pet. 39–40 (citing Ex. 1003 ¶¶ 276–279, 370, Fig. 19; Ex. 1008 ¶¶ 162–163).

Limitation 1e recites "a processor for selecting the stored sub content data based on selection information containing attribute information representing an attribute of the sub content." Ex. 1001, 37:5–8. Petitioner argues that the recited processor corresponds to the data processing unit in Ueda's server 191, which "analyzes the user's preference on the client side to provide a content adapted to the user's preferences. Thus, *content which interests a user or commercial content can be selectively provided* to the user." Pet. 41 (quoting Ex. 1003, code (57)) (citing Ex. 1003 ¶¶ 17, 19–23, 28, 119, 441–443). Petitioner also argues that user-preference and personal information stored in server 191 is "used to select commercial content relate[d] to an attribute such as a user interest (e.g., cars), a travel destination (e.g., South Korea), or a product type (e.g., South Korean products)." Pet. 42–43 (citing Ex. 1003 ¶¶ 432, 438–440).

Patent Owner does not specifically challenge Petitioner's arguments regarding limitations 1c–1e. *See* PO Resp. For the reasons given in the Petition, we find Petitioner's arguments persuasive.

(e) Limitation 1f

Limitation 1f recites "a first transmitter for transmitting selected sub content specification information for specifying the selected sub content data via the one or more connection control servers to the user equipment which has transmitted the content delivery request." Ex. 1001, 37:9–13.

Petitioner argues that Ueda's server 191 transmits a playlist specifying sub content to content providing device 150, as recited, which would necessarily require a transmitter. Pet. 43–45 (citing Ex. 1003 ¶¶ 241, 244–248, 253–254, 281, 399–405, 438, Figs. 6, 17, 19, 20, 24, 30; Ex. 1008 ¶ 176). According to Petitioner, a person of ordinary skill in the art would have had reason to carry out this transmission through proxy servers as taught in the SIP Standard, for reasons discussed above. Pet. 45–46 (citing Ex. 1004, 10, 12–15, 170; Ex. 1008 ¶¶ 180, 182); *see supra* Section III.D.1.

Apart from the issue of whether there was a general motivation to combine Ueda with the SIP Standard, which we address above in Section III.D.1, Patent Owner does not specifically address limitation 1f. *See* PO Resp.

For the reasons expressed above and in the Petition, we agree with Petitioner that using proxy servers to transmit selected sub content specification information, as recited in limitation 1f, would have been a straightforward and predictable modification of Ueda's disclosure. Thus, we determine that Ueda teaches limitation 1f in light of the SIP Standard.

(f) Limitation 1g

Limitation 1g recites

> wherein the first transmitter is configured to, at a same time that the one or more connection control servers executes a process for guaranteeing a communication bandwidth required for transmitting content data as a process for establishing the connection, transmit the play-list information via the one or more connection control servers to the user equipment which has transmitted the content delivery request.

Ex. 1001, 37:13–21.

Petitioner argues that the SIP Standard teaches executing a process for guaranteeing the necessary communication bandwidth for transmitting the requested content, as indicated by the transmission of SIP messages reflecting either (1) there is insufficient bandwidth for the requested content transmission (a "606 Not Acceptable" response with a header "Warning 370," which means there is insufficient bandwidth or (2) a "200 OK" message if the connection is acceptable. Pet. 47–49 (citing Ex. 1001, Figs. 5, 12, 13, 15, 18; Ex. 1004, 12 (Fig. 1), 15, 16, 29, 77–78, 109, 114, 182, 188–190, 192, 260). According to Dr. Reader, the bandwidth guarantee process would include "checking that the bandwidth specified in the session description or defined by the media does not exceed the available bandwidth," as "part of a process for establishing the connection, such that a session initiation request is canceled if the proxy servers receive a 606 Not Acceptable Response with the Warning 370 reason code." Ex. 1008 ¶ 189.

Petitioner also argues that the SIP and SDP Standards teach transmitting Ueda's playlist at the same time as the above "606 Not Acceptable" or "200 OK" message, either in the body of the same SIP message as an SDP description, or as a proprietary or experimental field in

the SIP header. Pet. 50–53 (citing Ex. 1004, 13, 33, 109, 170, 181–182, 192; Ex. 1005, 1, 4–5, 8–10, 12–13, 16, 21–22; Ex. 1008 ¶¶ 195–201; Ex. 1011, 3). According to Petitioner, it would have been obvious to do this because "Ueda's playlist characterizes the media session and prevents resource misuse if a separate connection were established solely to transmit the playlist." Pet. 53–55 (citing Ex. 1008 ¶¶ 202–204).

Patent Owner presents a number of arguments, which we address below:

(1) Whether the Petition Identifies a Bandwidth Guarantee Process in the Prior Art

Patent Owner argues that Petitioner's position is that the SIP "606 Not Acceptable" or "200 OK" messages, themselves, constitute the recited "process for guaranteeing a communication bandwidth," and that Petitioner has failed to show these messages actually guarantee anything. PO Resp. 34–35 (citing Ex. 2001 ¶¶ 83–86). According to Patent Owner, the SIP Standard expressly excludes from its scope any network resource reservation capabilities, and SIP messages do not "mandate a particular action at the receiving device." *Id.* (citing Ex. 1004, 1, 9–10; Ex. 2001 ¶¶ 86–87; Ex. 2010 ¶¶ 25, 27); *see also id.* at 36–37 (citing Ex. 2029, 75:7–8; Ex. 2010 ¶¶ 26–28).

Patent Owner also argues that, to the extent that the Petition argues that the "606 Not Acceptable" or "200 OK" messages" simply reflect the *result* of the bandwidth guarantee process, "the Petition fails to explain where the art actually discloses executing the guarantee process." PO Resp. 36 (citing *Magnum Oil Tools*, 829 F.3d 1364; *In re Warner*, 379 F.2d 1011, 1017 (C.C.P.A. 1967)). Patent Owner argues that in the '427 patent, the

bandwidth guarantee process takes place at least in "transport functions part 80, separate and apart from any SIP messages which are transmitted as part of the connection process," but Petitioner identifies no such component of Ueda in its Petition. *Id.* at 37–38 (citing Ex. 1001, 15:29–40).

In its Reply, Petitioner argues that it relies on the *combination* of Ueda and the SIP Standard to teach the recited bandwidth guarantee process, not the references in isolation. Pet. Reply 17 (citing *Bot M8 LLC v. Sony Interactive Ent. LLC*, 66 F.4th 1380, 1386 (Fed. Cir. 2023)). Thus, according to Petitioner, it is irrelevant whether the SIP Standard itself discloses network resource reservation capabilities. *Id.* at 17–18.

In its Sur-reply, Patent Owner disagrees that its arguments fail to address the combination of Ueda and the SIP Standard, but argues that Petitioner has simply failed to show how the combination performs any bandwidth guarantee process. PO Sur-reply 16–18 (citing Ex. 1004, 10; Ex. 2029, 75:7–8). Patent Owner also argues that Petitioner has untimely changed the theory of its Petition to back away from its alleged original position that SIP messages, themselves, constitute the execution of a bandwidth guarantee process. *Id.* at 18–19.

We disagree that Petitioner's argument in the Reply is untimely. As we discuss above, Petitioner's original argument in the Petition was that the recited bandwidth guarantee process takes place in SIP servers and may involve the use of SIP messages—not that the messages, themselves, constitute a bandwidth guarantee process. *See supra* Section III.B.2. Consistent with this, the Petition does not rely solely on SIP messages to show that the combination of Ueda and the SIP Standard teaches a bandwidth guarantee process as recited in limitation 1g. As Dr. Reader

opines, the guaranteeing process in that combination involves "checking that the bandwidth specified in the session description or defined by the media does not exceed the available bandwidth" and then either continuing or aborting the process for establishing the connection. *See* Ex. 1008 ¶ 189; *see also* Pet. 48 ("If a 6xx response, indicating that a request cannot be fulfilled, is received, the proxy server cancels all client pending transactions." (citing Ex. 1004, 109, 114, 192, 260)). Under the theory of the Petition, the "606 Not Acceptable" or "200 OK" SIP messages are part of the process of guaranteeing bandwidth, because the connection will abort if the SIP messages indicate that the required bandwidth is unacceptable, but the SIP messages are not, themselves, the recited process.

We also disagree with Patent Owner that Petitioner failed to identify where, in the Ueda–SIP Standard combination, the bandwidth guarantee process takes place. As the Petition points out, the SIP Standard teaches that it is the SIP *proxy server* that should cancel all client pending transactions if it receives a "6xx" response such as "606 Not Acceptable." *See* Pet. 48 (citing Ex. 1004, 109, 114, 192, 260).

For the above reasons, we find Petitioner's argument persuasive, and we determine that Petitioner has met its burden to explain in its Petition its theory of unpatentability with particularity. 35 U.S.C. § 312(a)(3); *Intelligent Bio-Sys., Inc.*, 821 F.3d at 1369. Petitioner provides at least as much detail for the bandwidth guarantee process in its proposed combination as the '427 patent itself does, and has provided enough detail to meet its burden in light of the broad scope of the claim limitation.

(2) Whether the Prior Art Must Include a Step of Reserving Bandwidth or Ongoing Enforcement of a Guarantee

Patent Owner argues that the bandwidth reservation process recited in limitation 1g implies "steps necessary for that to occur—which would include a bandwidth reservation step." PO Resp. 38–39 (citing Ex. 1001, 37:15–16). According to Patent Owner, this is because a person of ordinary skill in the art would have understood the word *guarantee* to "require more than an initial check, at the time of connection, that the user equipment has (in that moment) sufficient bandwidth." *Id.* at 39.[10] Rather, according to Patent Owner, the recited bandwidth guarantee includes reserving a bandwidth and then proactively ensuring that this bandwidth is available "for the entire transmission of the content data (which would necessarily include both the main content and the sub content)." *Id.* at 39; *see also* 41–42 & n.6 (citing Ex. 1001, 13:59–62; Ex. 2008 (dictionary definition of "guarantee"); Ex. 2031 (same); Ex. 2010 ¶ 29).

Based on that proposed construction, Patent Owner contends that the SIP Standard does not disclose the recited bandwidth guarantee process, "since the SIP Standard cannot force the implementer to (and cannot itself) execute any particular process." PO Resp. 40–41 (citing Ex. 1001, 12:13–16, Fig. 2; Ex. 1004, 10; Ex. 2001 ¶¶ 87–88). Patent Owner contends that a system may simply ignore the SIP message, and thus there would be no bandwidth guarantee. *Id.* at 44. Or, alternatively, if the proxy server responds

---

[10] Patent Owner does not cite to expert testimony for this point. *See* PO Resp. 39.

to a "6xx" message indicating insufficient bandwidth by cancelling the transmission, no connection is established, thus, the system fails to guarantee bandwidth for any transmission. *Id.* at 43.

Although Patent Owner acknowledges that it was known in the art to use a "bandwidth control mechanism in cooperation with the session initiation protocol (SIP)," and that this might include a "session control server" that "could reserve bandwidth 'on the basis of a SIP Session request,'" Patent Owner contends that "it is not the SIP requests themselves which perform the reservation and/or guarantee, and Petitioner fails to provide any art or analysis to fill this gap in the Grounds." PO Resp. at 43 (quoting Ex. 2009, 1) (citing Ex. 2001 ¶ 89).

In its Reply, Petitioner argues that Patent Owner's argument that a person of ordinary skill in the art would have interpreted the recited bandwidth guarantee process to include a bandwidth reservation step "is pure attorney argument." Pet. Reply 18–19 (citing *Elbit Sys. of Am., LLC v. Thales Visionix, Inc.*, 881 F.3d 1354, 1359 (Fed. Cir. 2018)). And according to Petitioner, even Dr. Cooperstock agreed on cross-examination that the '427 patent describes the bandwidth reservation process as a preparatory step to—not part of—the bandwidth guarantee process. *Id.* at 19 (citing Ex. 1017, 151:14–22; Ex. 1001, 13:60–62).

Petitioner also argues that limitation 1g states that the bandwidth guarantee process is performed "*as a process for establishing the connection*," and would therefore not include steps that occur *before* or *after* "the time of connection," which might include bandwidth reservation or continued monitoring during transmission to enforce the bandwidth guarantee. *Id.* at 19–21 (citing Ex. 1001, Fig. 5).

Finally, Petitioner argues that "nowhere does the '427 Patent describe guaranteeing a bandwidth for every possible request under every possible circumstance." Pet. Reply 21–22 (citing Ex. 1008 ¶¶ 188–189). According to Petitioner, Dr. Cooperstock conceded on cross-examination that "the patent 'does not appear to state what should happen in the case of the bandwidth guarantee process not being able to succeed,' and 'a [person of ordinary skill in the art], reading the patent, would, then, have the liberty of deciding what to do in that situation.'" *Id.* (quoting Ex. 1017, 144:12–21).

In its Sur-reply, Patent Owner argues that it "does not argue that *guaranteeing* bandwidth necessarily includes reserving a bandwidth," but simply that "the relevant server 'executes *a process* for guaranteeing a communication bandwidth,'" and that "this process has a preliminary step of performing a bandwidth reservation prior to the bandwidth guarantee," as shown in Figure 5 of the '427 patent. PO Sur-reply 19 (citing Ex. 1001, Fig. 5). Patent Owner also contends that it "does not argue that a bandwidth *must* be maintained in order for the bandwidth guarantee to have occurred," just that the bandwidth guarantee process "is an ongoing process that begins during the connection process with the server and extends until that process is complete." *Id.* at 20. According to Patent Owner, the bandwidth check in Petitioner's Ueda–SIP Standard combination would precede the connection process and thus be insufficient to meet limitation 1g. *Id.*

We disagree with Patent Owner that the bandwidth guarantee process must include a bandwidth reservation step. According to limitation 1g, the "process for guaranteeing a communication bandwidth" has to be executed "as a process for establishing the connection." Ex. 1001, 37:15–18. Although the '427 patent discusses bandwidth reservation step B501, this step takes

place well before the process for guaranteeing a communication bandwidth, with several intervening steps. *See id.*, 13:59–15:56, Fig. 5. Because the ’427 patent describes the “bandwidth reservation process” and the “bandwidth guarantee process” as distinct processes, separated in time, we determine that a person of ordinary skill in the art would have understood that the latter need not include the former.

We also disagree with Patent Owner that the bandwidth guarantee process must continue for the duration of the “process for establishing the connection” or afterwards, such as by continuing to monitor or enforce a bandwidth guarantee during the content transmission. In the ’427 patent, the “bandwidth guarantee process” is completed before the connection is fully established, and before the content transmission begins. *See* Ex. 1001, 15:41–43 (“Upon *completing* the bandwidth guarantee process, the core IMS part 30 transmits a transmission preparation completion notification to the user equipment 2 (step B502)” (emphasis added)); *id.* Fig. 5 (depicting step B502 as happening before “connection established” message E501).

For the reasons given by Petitioner, we find persuasive Petitioner’s argument that the broad, functional language of the bandwidth guarantee language in limitation 1g may encompass simply checking that the required bandwidth is acceptable, and if not, aborting the connection process, as happens in the asserted Ueda–SIP Standard combination. Patent Owner’s arguments seek to impose additional requirements to limitation 1g that go beyond the scope of the claim language.

We also disagree with Patent Owner’s argument that aborting a connection if there is insufficient bandwidth would fail to establish a connection required by limitation 1g. On its face, limitation 1g does not

require a connection to be established in all cases—only that, any time a connection is established, a connection control server executes a process for guaranteeing a communication bandwidth for that connection. *See* Ex. 1001, 37:16–18. This is what occurs in Petitioner's asserted combination.

(3) Whether the Prior Art Transmits Play-list Information at the Same Time as Establishing a Connection

Patent Owner argues that Petitioner has not shown that the SIP and SDP Standards teach sending a playlist at the time of establishing a connection, because Petitioner has not persuasively explained which SDP header fields a person of ordinary skill in the art would have used, or why. PO Resp. 44–47 (citing Ex. 1001, 37:21–30, 41:4–15, 42:17–27; Ex. 2001 ¶¶ 93–99).

Patent Owner also contends that "'play-list information' covers much more than 'information specifying the media,'" and Petitioner's showing for the combination of Ueda with the SIP and SDP Standards is conclusory and based on hindsight. *Id.* at 47–51 (citing Ex. 1001, 37:14–19; Ex. 2001 ¶¶ 83–87; Ex. 2010 ¶¶ 33–34, 42; *DSS Tech. Mgmt., Inc. v. Apple, Inc.*, 885 F.3d 1367, 1377 (Fed. Cir. 2018); *Johns Manville*, IPR2018-00827, Paper 9 at 20; *Polaris Indus., Inc. v. Artic Cat, Inc.*, 882 F.3d 1056, 1068 (Fed. Cir. 2018); *InTouch Techs.*, 751 F.3d at 1352; *Allied Erecting & Dismantling Co.* v. *Genesis Attachments, LLC*, 825 F.3d 1373, 1381 (Fed. Cir. 2016); *TriVascular, Inc. v. Samuels*, 812 F.3d 1056, 1066 (Fed. Cir. 2016)).

In its Reply, Petitioner argues that Patent Owner improperly focuses on the SIP and SDP Standards individually, rather than their combination with Ueda. Pet. Reply 22 (citing *Bot M8*, 66 F.4th at 1386). For example,

Petitioner relies on Ueda, not the SDP Standard, for disclosing the step of sending a playlist, and simply relies on the SIP and SDP Standards to provide a well-known way of doing so. *Id.* at 22–23 (citing Ex. 1008 ¶¶ 202–205); *see also id.* at 16–17 n.6 (citing Ex. 1008 ¶¶ 203–204; *KSR*, 550 U.S. at 416).

In its Sur-reply, Patent Owner argues that Petitioner has not, in more than a conclusory way, explained why a person of ordinary skill would have combined the teachings of the SIP and SDP Standards with Ueda. PO Sur-reply 21. Patent Owner contends that all Petitioner has done is claim that an ordinarily skilled artisan "*could have* used the fields of the SDP Standard to transmit play-list information." *Id.*

We find Petitioner's arguments persuasive. Petitioner does not rely solely on the SDP Standard for teaching the sending of play-list information, but also relies on Ueda, which discloses sending a playlist including an identification of main content, commercial content, and an output sequence, as we discuss in more detail below in the context of limitation 1h. *See infra* Section III.D.3(g). Petitioner relies on the SIP and SDP Standards for teaching that Ueda's playlist, as with other data describing a session, may be formatted and transmitted as payload within a standard SIP message, for example using SDP fields. Based on the evidence of record, we find it persuasive that a person of ordinary skill in the art would have recognized SDP as a known way to format play-list information, since SDP has specific fields to convey the features of a playlist such as metadata and links to the content. *See* Pet. 50–52.

Petitioner's arguments are not based on improper hindsight bias. Although Petitioner argues that the SDP Standard "can" or "could" be used

to format Ueda's playlist, the evidence suggests that doing so would merely be "[t]he combination of familiar elements according to known methods," and that kind of combination "is likely to be obvious when it does no more than yield predictable results." *KSR*, 550 U.S. at 416. The evidence shows that is the case here. As such, the Petition relies on the predictable combination of the prior art according to known methods and on various motivations to combine the references (*see Supra* Sections III.D.1–2), not on the '427 patent itself, for teaching the combination.

(4) Whether Ueda Teaches Away from Providing Play-list Information While Establishing a Connection

Finally, Patent Owner argues that Ueda teaches away from providing "play-list information" at the same time as establishing a connection, because Ueda teaches successfully completing user authentication *before* transmitting the playlist. PO Resp. 52–53 (citing Ex. 1003 ¶¶ 56, 365, Fig. 25; Ex. 2001 ¶ 99). According to Patent Owner, "Petitioner's argument fails to reconcile[] this ordering of Ueda, which would prevent implementation of the proposed combination with the SDP Standard, in which the playlist is transmitted as part of the 'Session Initiation.'" *Id.* at 53 (citing Ex. 2001 ¶ 100).

In its Reply, Petitioner argues that limitation 1g "does not require transmitting 'play-list information' 'at the same time' as *authentication*, but at a same time 'the one or more connection control servers executes a process for guaranteeing a communication bandwidth . . . as a process for establishing the connection.'" Pet. Reply 23. Petitioner also argues that the

’427 patent *also* describes an authentication step before transmitting the play-list information. *Id.* (citing Ex. 1001, 12:56–13:13, 13:50–58, Fig. 4).

We find Petitioner’s arguments persuasive, and we disagree with Patent Owner that claim 1 restricts the timing of user authentication. As Petitioner notes, user authentication occurs in the ’427 patent before the process of establishing a connection as depicted in Figure 5. *See* Ex. 1001, 12:36–55, Fig. 4 (user authentication occurs when user equipment 2 is powered-up); *id.* at 13:50–58 (SIP message A501, at the beginning of Figure 5, includes “user authentication success information”). But we find nothing in the claim language, itself, that requires any particular timing for authentication. Nor do we understand Petitioner’s motivation-to-combine argument to hinge on the timing of authentication. Thus, Ueda does not “criticize, discredit, or otherwise discourage” the claimed invention. *In re Fulton*, 391 F.3d 1195, 1201 (Fed. Cir. 2004).

For the above reasons, we find that Petitioner has shown that Ueda teaches limitation 1g in view of the SIP and SDP Standards.

(g) <u>Limitation 1h</u>

Limitation 1h recites

> the play-list information being information containing the main content identification information contained in the content delivery request and the selected sub content specification information, and the play-list information being information containing information indicating a sequence in which the main content identified by the main content identification information and the sub content specified by the selected sub content specification information are output.

Ex. 1001, 37:21–30. Petitioner argues that Ueda’s playlist identifies both sub content (e.g., a commercial) and main content (e.g., a movie) and indicates

the sequence in which they are played. Pet. 55–56 (citing Ex. 1003 ¶¶ 7, 9–10, 98, 101, 158–159, 183, 235, 248, 253–254, 273, 281, 356, 399–405, 424, 438, Figs. 20, 30).

Patent Owner does not challenge Petitioner's arguments for limitation 1h directly. *See* PO Resp. However, in its Response, Patent Owner argued, in the context of limitation 1g, that the Petition made "[n]o mention of a play-list, let alone a play-list as defined in the Challenged Claims" within the SDP Standard. PO Resp. 45–46 (citing Ex. 2001 ¶ 96). Later, in its Sur-reply, Patent Owner presented a very different argument that Petitioner made no effort to show that *Ueda's* playlist is "play-list information" as recited in limitation 1h. PO Sur-reply 21–22 (citing Ex. 1001, 37:21–30, 41:4–15, 42:17–27).

As Petitioner correctly pointed out in the oral hearing, Patent Owner's Sur-reply argument that Ueda (as opposed to the SDP Standard) does not teach play-list information as defined in limitation 1h is a new argument not found in the Patent Owner Response. *See* Tr. 65:25–66:11. We agree with Petitioner that the argument is untimely.

Even if Patent Owner's argument were timely, we would disagree with it. Petitioner has persuasively shown that Ueda's playlist file 402 includes all the information that limitation 1h requires, including "main content identification information" (e.g., movie titles), "sub content specification information" (e.g., commercial content) and the sequence in which these are to be output. *See, e.g.*, Ex. 1003 ¶¶ 7, 248–254.

For the reasons given in the Petition, we find Petitioner's arguments persuasive.

(h) Limitation 1i

Limitation 1i recites

> wherein the user equipment comprises a second receiver for receiving main content data and sub content data transmitted by the application server system and output, based on the received main content data and sub content data, viewing content in which sub content represented by the sub content data is inserted in main content represented by the main content data.

Ex. 1001, 37:31–37. Petitioner argues that Ueda's communication interface 156 in Figure 6 includes a receiver to receive the main content data and sub content data transmitted from server 191, and that this data is output in the playlist order. Pet. 56–60 (citing Ex. 1003 ¶¶ 7, 9–10, 98, 101, 118–119, 158–159, 163–164, 183, 193–198, 213, 220–221, 235, 239, 244–248, 253–254, 273, 276, 279, 281, 356, 399–405, 413, 438–439, 443, Figs. 6, 17, 19, 20, 30; Ex. 1008 ¶¶ 211–222).

Patent Owner does not challenge Petitioner's arguments for limitation 1i. *See* PO Resp. For the reasons given in the Petition, we find Petitioner's arguments persuasive.

(i) Conclusion as to Claim 1

For the above reasons, we determine that Petitioner has shown, by a preponderance of the evidence, that Ueda in combination with the SIP and SDP Standards teaches all the limitations of claim 1, and that a person of ordinary skill in the art would have had reason to combine the features of each reference as Petitioner argues in the Petition. We therefore determine that claim 1 is unpatentable under § 103(a) as obvious over Ueda in view of the SIP and SDP Standards.

4. Other Claims

Petitioner's first ground also challenges the patentability of Claims 4–9, 14, 16, 18, 20, 22, 32, and 34–36. Patent Owner does not specifically contest these claims, except as to the general motivations to combine and the arguments regarding independent claim 1, as discussed above. *See* PO Resp. 53–55.

Claim 4 depends from claim 1, and further recites the following limitations:

> [4a] the memory is configured to store the sub content data in association with attribute information representing an attribute of sub content represented by the sub content data;
>
> [4b] the selection information contains user basic information that is information for specifying the attribute information and is information associated with user identification information for identifying a user of the user equipment; and
>
> [4c] the processor is configured to select sub content data stored in association with the attribute information specified by the user basic information associated with the user identification information for identifying the user of the user equipment which has transmitted the content delivery request.

Ex. 1001, 38:5–22 (Petitioner's reference numbers added).

Petitioner argues that Ueda teaches limitations 4a–4c and points to specific teachings in Ueda for each limitation, with references to supporting expert testimony. Pet. 61–63 (citing Ex. 1003, code (57), ¶¶ 17, 19–23, 28, 31, 147–148, 169, 243, 258, 275, 343, 360, 375, 378–382, 386–387, 389, 429, 432–443, 485, Fig. 30; Ex. 1001, 9:13–20; Ex. 1008 ¶¶ 224–239).

Claim 5 also depends from claim 1 and includes a limitation substantially the same as limitation 4a and the following two additional limitations:

> [5b] the selection information contains content basic information that is information for specifying the attribute information and is information associated with the main content identification information for identifying the main content; and
>
> [5c] the processor is configured to select sub content data stored in association with the attribute information specified by the content basic information associated with the main content identification information contained in the received content delivery request.

Ex. 1001, 38:23–38 (Petitioner's reference numbers added).

Petitioner relies on its argument for limitation 4a and argues that Ueda teaches limitations 5b and 5c. Pet. 64–65 (citing Ex. 1003 ¶¶ 17, 19–23, 28, 424–429, 433–443; Ex. 1008 ¶¶ 242–251).

Claims 6–9 also depend from claim 1, and include various limitations that Petitioner addresses in the context of claim 1, arguing that Ueda teaches these limitations in view of the SIP and SDP Standards. *See* Ex. 1001, 38:39–39:11; Pet. 66–68 (citing Ex. 1001, 15:49–63; Ex. 1003 ¶¶ 122, 151–155, 432, 438, Figs. 7, 24, 30; Ex. 1004, 1, 11–12, 15–16, Fig. 1; Ex. 1008 ¶¶ 253–280).

Claims 14, 18, 20, 22, 32, and 34–36 are independent and include limitations substantially similar to claims 1, 4, and 5. *Compare* Ex. 1001, 36:56–37:37, *with id.* at 40:44–41:22, 41:64–42:34, 43:13–61, 44:54–45:26, 47:26–48:2, 48:54–50:45. Petitioner relies on the arguments it made in the context of claims 1, 4, and 5, taking into account the minor differences. Pet. 69–71 (citing Ex. 1003 ¶ 244; Ex. 1008 ¶¶ 282–299).

Claim 16 depends from claim 14 and includes a limitation substantially similar to limitation 1i. *Compare* Ex. 1001, 41:47–55, *with id.* at 37:31–37. Petitioner relies on its arguments for limitations 14 and 1i. Pet. 69 (citing Ex. 1008 ¶ 284).

We have addressed all the contested issues regarding claims 4–9, 14, 16, 18, 20, 22, 32, and 34–36. *See supra* Sections III.D.1–3. As to the remaining uncontested issues, we have considered Petitioner's arguments and the supporting evidence, and we agree with Petitioner's analysis. We determine that Petitioner has shown by a preponderance of the evidence that the combination of Ueda and the SIP and SDP Standards teach the limitations of each of these claims, and that there would have been a reason to combine the references as Petitioner argues. Thus, we conclude that claims 4–9, 14, 16, 18, 20, 22, 32, and 34–36 are unpatentable under § 103(a) as obvious over Ueda in view of the SIP and SDP Standards.

E. GROUND BASED ON UEDA, THE SIP AND SDP STANDARDS, AND COHEE (CLAIMS 2, 3, 15, AND 17)

For its third ground, Petitioner argues that claims 2, 3, 15, and 17 are unpatentable under § 103(a) as obvious over Ueda in view of the SIP and SDP Standards and Cohee. Pet. 4. Based on the *Graham* factors, we determine that Petitioner has shown by a preponderance of the evidence that claims 2, 3, 15, and 17 are unpatentable under this ground for the reasons explained below.

Claim 2 depends from claim 1, and further recites the following limitations:

[2a] the user equipment comprises:

a third receiver for receiving the selected sub content specification information transmitted by the application server system; and

[2b] a second transmitter for transmitting, to the application server system, a main content viewing request containing the main content identification information and an [sic] sub content viewing request containing the received selected sub content specification information when connection with the application server system is established by the one or more connection control servers, and

[2c] the application server system comprises a fourth receiver for receiving the main content viewing request transmitted by the user equipment and transmitting main content data identified by the main content identification information contained in the received main content viewing request to the user equipment, and for receiving the sub content viewing request transmitted by the user equipment and transmitting sub content data specified by the selected sub content specification information contained in the received sub content viewing request to the user equipment.

Ex. 1001, 37:38–62 (Petitioner's reference numbers added).

Petitioner identifies Ueda's content-providing device 150 as the "third receiver" recited in limitation 2a. Pet. 77 (citing Ex. 1008 ¶¶ 319–321).

Petitioner also identifies a transmitter in Ueda's content-providing device 150 as the "second transmitter" recited in limitation 2b, relies on Ueda for establishing a connection, and argues that Cohee teaches transmitting main and sub content to an application server as recited in limitation 2b. Pet. 78–81 & n.4 (citing Ex. 1003 ¶ 118, Fig. 6; Ex. 1007 ¶¶ 32, 35, 37, 53–54, 57, 60–63, 74, Figs. 1, 4–8; Ex. 1008 ¶¶ 327–328, 333). Thus, in the combination, "Ueda's content providing device 150

transmits, to Ueda's server 191, a main content viewing request . . . containing main content identification information and a sub content viewing request containing the received selected sub content specification information" when the connection between the two devices is established. Pet. 81 (citing Ex. 1007 ¶¶ 57, 60–63, Fig. 6; Ex. 1008 ¶ 334).

For limitation 2c, Petitioner argues that Cohee's client computer 125 requests each media file referenced in a playlist, and video ad server 115 transmits each media file in response to the request from viewer client computer 125. Pet. 82 (citing Ex. 1007 ¶¶ 57, 63, Fig. 6). According to Petitioner, "Ueda in view of Cohee teaches receiving the main content viewing request and the sub content viewing request," and "[t]he transmitted media files as taught in Cohee" correspond to the recited "main content data identified by main content identification information contained in the received main content viewing request" and "sub content data specified by selected sub content specification information contained in the received sub content viewing request." Pet. 82–83 (citing Ex. 1003 ¶¶ 119, 241, 245, 248, 276–279, 370, Fig. 19; Ex. 1007 ¶¶ 57, 60–63, Fig. 6; Ex. 1008 ¶¶ 339–340).

Claim 3 also depends from claim 1, and includes limitations similar to limitations 2a and 2b. *Compare* Ex. 1001, 37:65–38:4, *with id.* at 37:41–51. Petitioner relies on its arguments for limitations 2a and 2b. Pet. 83–84.

Claims 15 and 17 depend from claim 14 and include limitations substantially similar to claims 2 and 3, respectively. *Compare* Ex. 1001, 37:38–38:4, *with id.* at 41:23–46, 41:56–63. Petitioner relies on essentially the same arguments for claims 2 and 3. Pet. 84.

As motivations to combine Ueda's system with Cohee's teachings, Petitioner argues that a person of ordinary skill in the art would have wanted

"to make it possible for media clips to reside at any location, including at a remote server on the Internet," to "reduc[e] dedication of end-user equipment local storage resources for storing main content and sub content, and [to] reduc[e] privacy risks for content providers that could occur by permitting local storage of content." Pet. 25 (citing Ex. 1007 ¶ 53; Ex. 1008 ¶ 113).

In response, Patent Owner argues that Petitioner has not shown a non-conclusory motivation to combine Ueda and the SIP and SDP Standards with Cohee, in part because Petitioner only specifically discusses the combination of Ueda with Cohee. PO Resp. 63–64 (citing Ex. 2029, 114:3–8; Ex. 2001 ¶¶ 134–138).

In addition, Patent Owner contends that Ueda only teaches the use of "a disc that points to a single URL, at the server, to determine whether there exists new content to download in response to a user request," and the server does not provide commercial content in response to a request, just in response to whether there is new commercial content available. PO Resp. 64–65 (citing Ex. 1003 ¶ 230; Ex. 2001 ¶ 139). According to Patent Owner, the combination with Cohee would have required a significant modification of Ueda's system to include an unrelated feature, and Petitioner has not explained what would have motivated such a change. *Id.* at 65 (citing Ex. 2001 ¶ 140). Patent Owner also argues that it is unclear how the alleged motivation to allow media clips to reside at any location relates to Ueda's system, "which contemplates a single URL that contains information on whether or not a sub content should be transmitted." *Id.* (Ex. 2001 ¶ 140).

Next, Patent Owner contends that Petitioner does not offer sufficient explanation or justification for the other alleged motivations to combine the

references. PO Resp. 65–66. Moreover, Patent Owner argues that Ueda teaches away from Petitioner's alleged motivation that using Cohee's teachings would reduce dedication of end-user equipment local storage resources for storing main content and sub content. *Id.* at 66 (citing Ex. 1003, Fig. 7; Ex. 2001 ¶¶ 141–142). According to Patent Owner, Ueda "highlights that '[i]t is indispensable to obtain a content from the server *before* the content playback processing employing a disc stored content and a local storage unit stored content is performed.'" *Id.* at 66–67 (alteration in original) (quoting Ex. 1003 ¶ 121) (citing Ex. 2001 ¶ 143).

Finally, Patent Owner argues that Petitioner fails to even allege that a person of ordinary skill in the art would have had a reasonable likelihood of success in combining Ueda with Cohee. *Id.* at 67 (citing *Intelligent Bio-Sys.*, 821 F.3d at 1367; *TQ Delta, LLC v. CISCO Sys., Inc.*, 942 F.3d 1352, 1357 (Fed. Cir. 2019)).

In its Reply, Petitioner argues that Patent Owner again focuses on the references individually, rather than their combination, but that Petitioner has provided sufficient reasons, backed by testimonial evidence, supporting the combination of Cohee with Ueda as modified by the SIP and SDP Standards. Pet. Reply 28 (citing Ex. 1008 ¶ 113; Ex. 2029, 114:12–115:7). Petitioner also disagrees, as a factual matter, that Ueda teaches a disc that points to a single URL. *Id.*

We find Petitioner's arguments persuasive. Although the Petition addresses the combination of Ueda with Cohee, it is understood that this combination involves Ueda as modified by the SIP and SDP Standards, given that the Petition refers back to the analysis for claim 1 explaining the modification of Ueda in view of the SIP and SDP Standards. *See* Pet. 77.

We also disagree that Petitioner's asserted motivation to combine is conclusory. Cohee itself expresses the motivation that its teachings make it "possible for a media clip to reside at any location on the Internet accessible by a URL," and this interpretation of Cohee is supported by expert testimony, which we credit. Ex. 1007 ¶ 53; Ex. 1008 ¶ 113. We also find reasonable and credible Dr. Reader's opinion that the combination would have led to efficiency and security benefits. Ex. 1008 ¶ 113.

As we discuss above, we disagree with Patent Owner that Ueda discloses a single server at a hard-coded URL, and even if it does, a person of ordinary skill would have had reason to replace that brittle system with a more flexible approach in light of the SIP Standard. *See supra* Section III.D.1(a). Thus, we disagree with Patent Owner's teaching-away argument.

Finally, we determine that Petitioner has provided enough evidence to show that there would have been a reasonable expectation of success in combining Ueda with Cohee, given the well-known and predictable nature of the technology, the degree of predictability within the relevant art, and the level of ordinary skill to which the parties have agreed. *See supra* Section III.A.

F. OTHER GROUNDS

In its second ground, Petitioner argues that claims 1, 4–9, 14, 16, 18, 20, 22, 32, and 34–36 are unpatentable under § 103(a) as obvious over Ueda, the SIP Standard, and Bechtolsheim. Pet. 72–76. In its fourth ground, Petitioner argues that claims 2, 3, 15, and 17 are unpatentable as obvious over Ueda, the SIP Standard, Bechtolsheim, and Cohee. Pet. 77–84.

Because these two grounds challenge only claims already addressed above, and we determine that the claims are unpatentable, we need not reach the second and fourth grounds. *See Boston Sci. Scimed, Inc. v. Cook Grp. Inc.*, 809 F. App'x 984, 990 (Fed. Cir. 2020) (nonprecedential) ("[T]he Board need not address issues that are not necessary to the resolution of the proceeding.").

IV. CONCLUSION[11]

For the reasons above, Petitioner has shown by a preponderance of the evidence that claims 1–9, 14–18, 20, 22, 32, and 34–36 of the '427 patent are unpatentable under § 103(a).

---

[11] Should Patent Owner wish to pursue amendment of claims in a reissue or reexamination proceeding after this decision, we draw attention to the April 2019 *Notice Regarding Options for Amendments by Patent Owner Through Reissue or Reexamination During a Pending AIA Trial Proceeding*. *See* 84 Fed. Reg. 16,654 (Apr. 22, 2019). If Patent Owner chooses to file a reissue application or a request for reexamination of the challenged patent, we remind Patent Owner of its continuing obligation to notify the Board of any such related matters in updated mandatory notices. *See* 37 C.F.R. § 42.8(a)(3), (b)(2).

In summary:

Claim(s)	35 U.S.C. §	Reference(s)/ Basis	Claims Shown Unpatentable	Claims Not Shown Unpatentable
1, 4–9, 14, 16, 18, 20, 22, 32, 34–36	103(a)	Ueda, SIP Standard, SDP Standard	1, 4–9, 14, 16, 18, 20, 22, 32, 34–36	
1, 4–9, 14, 16, 18, 20, 22, 32, 34–36	103(a)	Ueda, SIP Standard, Bechtolsheim[12]		
2, 3, 15, 17	103(a)	Ueda, SIP Standard, SDP Standard, Cohee	2, 3, 15, 17	
2, 3, 15, 17	103(a)	Ueda, SIP Standard, Bechtolsheim, Cohee		
Overall Outcome			1–9, 14–18, 20, 22, 32, 34–36	

V. ORDER

It is

ORDERED that claims 1–9, 14–18, 20, 22, 32, and 34–36 of the ’427 patent are unpatentable; and

FURTHER ORDERED that parties to this proceeding seeking judicial review of our decision must comply with the notice and service requirements of 37 C.F.R. § 90.2.

---

[12] For the reasons explained above, we do not reach either of the two grounds based in part on Bechtolsheim. *See supra* Section III.F.

For PETITIONER:

Scott Weidenfeller
Anupam Sharma
COVINGTON & BURLING LLP
sweidenfeller@cov.com
asharma@cov.com

Daniel Yannuzzi
Mark Catanese
Darren Franklin
SHEPPARD, MULLIN, RICHTER & HAMPTON
dyannuzzi@sheppardmullin.com
mcatanese@sheppardmullin.com
dfranklin@sheppardmullin.com

For PATENT OWNER:

Eliot Williams
Robert Maier
Jennifer Tempesta
Michael Knierim
Nicholas Palmieri
BAKER BOTTS L.L.P.
eliot.williams@bakerbotts.com
robert.maier@bakerbotts.com
jennifer.tempesta@bakerbotts.com
michael.knierim@bakerbotts.com
nick.palmieri@bakerbotts.com