UNITED STATES PATENT AND TRADEMARK OFFICE

BEFORE THE PATENT TRIAL AND APPEAL BOARD

PELOTON INTERACTIVE, INC.,
Petitioner,

v.

NEC CORPORATION,
Patent Owner.

Case No. IPR2023-01241

Patent No. 9,769,427

DECLARATION OF JEREMY R. COOPERSTOCK. PH.D.

IN SUPPORT OF PATENT OWNER PRELIMINARY RESPONSE

TABLE OF CONTENTS

I. Introduction 1
A. Background and Qualifications 1
B. Summary of Opinion 4
C. Materials Considered 5
II. Understanding of the Law 6
A. The Level of Ordinary Skill in the Art 6
B. Prior Art 7
C. Obviousness 8
III. The Challenged Patent 10
A. Technical Background 10
B. The '427 Patent 11
IV. Claim Construction 13
A. "equipment specification information" 13
B. "the one or more connection control servers executes a process for guaranteeing a communication bandwidth required for transmitting content data as a process for establishing the connection" 13
C. "at a same time . . . transmit[ting] the play-list information . . . to the user equipment which has transmitted the content delivery request." 16
V. Validity of the '427 Patent 19
A. Claims 10, 12, 21 and 33 Are Not Obvious in View of Ueda Combined with the SIP Standard and the SDP Standard (Ground 1) 19
1. Overview of Ueda 19
2. Overview of the SIP Standard 21
3. Overview of the SDP Standard 22
4. Motivation to Combine Ueda with the SIP Standard 23
5. Motivation to Combine Ueda and the SIP Standard with the SDP Standard 33
6. ['427 Claim 10] SIP Standard does not teach "the one or more connection control servers executes a process for guaranteeing a communication bandwidth required for transmitting content data as a process for establishing the connection" (claim element [10j-1]) 37

7. ['427 Claim 10] SIP Standard in view of SDP Standard does not teach "at a same time that the one or more connection control servers executes a process for guaranteeing a communication bandwidth required for transmitting content data as a process for establishing the connection" (claim element [10j-2]) 40

8. Claim 12 Is Not Obvious In View of the Cited References.....45

9. Claims 21 and 33 Are Not Obvious In View of the Cited References 46

B. Claims 10, 12, 21, and 33 Are Not Obvious in View of Ueda Combined with the SIP Standard and Bechtolsheim (Ground 2) 47

1. Overview of Bechtolsheim.....47

2. Motivation to Combine Ueda with the SIP Standard.....49

3. Motivation to Combine Ueda and the SIP Standard with Bechtolsheim...49

4. ['427 Claim 10] SIP Standard does not teach "the one or more connection control servers executes a process for guaranteeing a communication bandwidth required for transmitting content data as a process for establishing the connection" (claim element [10j-1]) 51

5. ['427 Claim 10] SIP Standard in view of Bechtolsheim does not teach "at a same time that the one or more connection control servers executes a process for guaranteeing a communication bandwidth required for transmitting content data as a process for establishing the connection" (claim element [10j-2]) 51

6. Claim 12 Is Not Obvious in View of the Cited References.....54

7. Claims 21 and 33 Are Not Obvious In View of the Cited References 54

C. Claims 11, 13, 19 and 23 Are Not Obvious in View of Ueda Combined with the SIP Standard, the SDP Standard, and Cohee (Ground 3).....55

1. Overview of Cohee.....55

2. Motivation to Combine Ueda and the SIP Standard and the SDP Standard with Cohee 57

3. Claims 11 and 13 Are Not Obvious in View of Ueda combined with the SIP Standard, the SDP Standard, and Cohee 61

4. Claims 19 and 23 Are Not Obvious in View of the Cited References 61

D. Claims 11, 13, 19, and 23 Are Not Obvious in View of Ueda Combined with the SIP Standard, Bechtolsheim, and Cohee (Ground 4).....62

1. Motivation to Combine Ueda and the SIP Standard and Bechtolsheim with Cohee.....62

2. Claims 11 and 13 Are Not Obvious In View of the Cited References 62

3. Claims 19 and 23 Are Not Obvious In View of the Cited References 63
VI. Right to Supplement.....63
VII. Conclusion.....63

I, Jeremy R. Cooperstock, declare as follows:

1. I make this declaration based upon my own personal knowledge and, if called upon to testify, would testify competently to the matters contained herein.

2. I understand that Peloton Interactive, Inc. ("Petitioner" or "Peloton") submitted a petition ("Petition") for *inter partes* review, challenging claims 10-13, 19, 21, and 33 ("Challenged Claims") of U.S. Patent No. 9,769,427 ("'427 Patent"). I have been asked by counsel for Patent Owner, NEC Corporation ("Patent Owner" or "NEC") to provide technical opinions in connection with the *inter partes* review. I am being compensated for my time at my standard consulting rate. My compensation is not dependent in any way upon the outcome of this matter.

3. I submit this declaration in support of Patent Owner's Preliminary Response. I reserve the right to supplement my opinions, should I be requested to provide additional analysis in connection with the patentability of the Challenged Claims.

I. INTRODUCTION

A. Background and Qualifications

4. I am an expert in media streaming technologies. My experience is based on my education and work, which are summarized below and reflected in my curriculum vitae. A copy of my complete curriculum vitae is attached to this declaration as Exhibit 2002.

5. I obtained a Bachelor of Applied Science (B.A.Sc) degree in Electrical Engineering (Computer Engineering Option) with Honors from the University of British Columbia in 1990, a Master of Science (M.Sc.) degree in Computer Science from the University of Toronto in 1992, and a Doctor of Philosophy (Ph.D.) degree in Electrical and Computer Engineering from the University of Toronto in 1996.

6. I have been employed at McGill University since November 2017, where I am currently a Full Professor in the Department of Electrical and Computer Engineering. In this capacity, I conduct and supervise research activities, and teach courses at the upper undergraduate and graduate level on human-computer interaction, artificial intelligence, embedded systems, and haptic interaction design.

7. I am a member of the Centre for Intelligent Machines, and a founding member of the Centre for Interdisciplinary Research in Music Media and Technology at McGill University. I presently direct a group of approximately 50 researchers at the Shared Reality Lab, which focuses on computer mediation to facilitate high-fidelity human communication and the synthesis of perceptually engaging, multimodal, immersive environments. I led the development of the Intelligent Classroom, the world's first Internet streaming demonstrations of Dolby Digital 5.1, multiple simultaneous streams of uncompressed high-definition video, a high-fidelity orchestra rehearsal simulator, a simulation environment that renders graphic, audio,

and vibrotactile effects in response to footsteps, and a mobile game treatment for amblyopia.

8. I have been developing and working with network media distribution technologies since 1990, and I led the world's first demonstrations of high-fidelity multichannel audio streaming in 1999 and 2000. My work on the Ultra-Videoconferencing system was recognized by an award for Most Innovative Use of New Technology from ACM/IEEE Supercomputing and a Distinction Award from the Audio Engineering Society. The research I supervised on the Autour project earned the Hochhausen Research Award from the Canadian National Institute for the Blind and an Impact Award from the Canadian Internet Registry Association, and my Real-Time Emergency Response project won the Gold Prize (brainstorm round) of the Mozilla Ignite Challenge. I am also a recipient of several "best paper" awards from scholarly societies for my research.

9. I have worked with IBM at the Haifa Research Center, Israel, and the Watson Research Center in Yorktown Heights, New York, the Sony Computer Science Laboratory in Tokyo, Japan, and was a visiting professor at Bang & Olufsen, Denmark, where I conducted research on telepresence technologies as part of the World Opera Project. I led the theme of Enabling Technologies for a Networks of Centres of Excellence on Graphics, Animation, and New Media (GRAND), chaired

the Technical Committee on Network Audio Systems, and served as an Associate Editor of the Journal of the Audio Engineering Society.

10. I have carried out significant research involving design and implementation of haptic feedback systems, virtual and augmented reality, and mobile computing applications. My work in these areas has been recognized with several best paper awards. In recognition of my expertise in the domain of haptics, I was invited to serve as an Associate Editor for the IEEE Transactions on Haptics, Associate Editor for the Frontiers in Virtual Reality, and Associate Editor for the World Haptics Conference.

11. My experience in academic and practical situations as well as my hands-on experience with multimedia production systems provides me with an appreciation of, and expertise in, the technology involved with U.S. Patent No. 9,769,427.

12. I have been retained by counsel for Patent Owner to provide my expert opinion in connection with the above-captioned proceeding as set forth herein.

B. Summary of Opinion

13. As noted above, I have been asked to provide my opinions regarding the validity of the ’427 Patent in connection with the *inter partes* review petition filed by Peloton. It is my opinion that Petitioner fails to show that any of the Challenged Claims are unpatentable. To assist review, and not to limit the scope of my opinions expressed herein, I provide a high-level summary of my opinions below.

14. The ’427 Patent discloses an innovative content delivery system, which receives and combines two content streams (referred to as “main” and “sub” content) for output at a user’s device. This is a valuable innovation because it allows for the user to specify and view sub-content of interest that is inserted into the main content for delivery to the receiver of this content. Separately, the ‘427 also disclosed the innovation of a system that can establish a connection at a same time that it guarantees the bandwidth required for transmission of both main and sub content.

15. Petitioner does not allege that any of the prior art references anticipate the invention of the ’427 Patent claimed by the Challenged Claims.

16. Nor are the Challenged Claims rendered obvious by any of the prior art references, alone or in any of the combinations alleged by Petitioner. Petitioner has failed to show any working modification or combination of prior art that will achieve the ’427 Patent’s invention. Petitioner has also failed to identify and show any motivation to combine the cited references.

17. Accordingly, it is my opinion that all of the Challenged Claims are not unpatentable.

C. Materials Considered

18. The analysis that I provide in this Declaration is based on my education, research, and experience, as well as the documents I have considered, which are cited throughout this declaration. In forming my opinions, I have read and

considered the ’427 Patent, Ex. 1001 and relevant portions of its prosecution history Ex. 1002.

II. UNDERSTANDING OF THE LAW

19. My opinions are also informed by my understanding of the relevant law as provided by counsel, as set forth below. I understand that the patentability of a patent is analyzed on a claim-by-claim basis, from the perspective of a hypothetical person of ordinary skill in the art (“POSA”).

A. The Level of Ordinary Skill in the Art

20. I understand that this proceeding is an *inter partes* review (“IPR”) proceeding before the Patent Trial and Appeal Board (the “Board”). I understand that claims are to be construed in accordance with the ordinary and customary meaning of such claim as understood by one of ordinary skill in the art and the prosecution history pertaining to the patent.

21. When interpreting a patent, I understand that it is important to view the disclosure and the claims of that patent from a perspective of a POSA at the time of the invention.

22. I understand that Petitioner and Petitioner’s expert, Dr. Clifford Reader, assert that a POSA as of the time of invention would have had a bachelor’s degree, or equivalent, in electrical engineering, computer science, or a related field, and 2-3 years of experience researching, designing, or developing content delivery systems

and related hardware, software, and firmware or equivalent experience. A person having less education but more relevant practical experience, or more education and less experience, might also meet this standard. For the purposes of this declaration, I will apply this definition of a POSA.

23. With respect to the ’427 Patent, I understand that the time of invention is at the latest November 18, 2008, which is the earliest priority date claimed on the face of the patent. I also understand that Patent Owner may submit evidence that the date of invention for the ’427 Patent may be earlier than this date. For the purposes of this declaration, I will treat November 18, 2008 as the date of invention of the ‘427 Patent, though I reserve the right to modify this date as I review further evidence.

24. Based on the above definition, I possess, and at the time of invention possessed, at least ordinary skill in the art, and my qualifications and experience exceed those of a POSA at the time of invention of the ’427 Patent. As noted above, I have worked with content streaming systems since at least 1999.

25. As such, in arriving at my opinions and conclusions in this declaration, I have considered the issues from the perspective of a POSA at the time of invention of the ‘427 Patent.

B. Prior Art

26. I understand that earlier publications and patents, which may be referred to as “prior art,” may act to render a patent unpatentable based on: (a) anticipation and (b)

obviousness. I further understand that the prior art must be viewed from the perspective of a POSA at the time of invention. I understand from counsel that the earliest priority date of the application for the ’427 Patent, November 18, 2008, may be treated as the time of the invention for purposes of my analysis in this declaration.

27. For purposes of this declaration, I understand that “prior art” in the present petition includes U.S. Patent Application Publication No. 2009/0094321 (“Ueda”) (Ex 1003), *SIP Session Initial Protocol* (RFC 3261) (the “SIP Standard”) (Ex 1004), *SDP: Session Description Protocol* (RFC 4566) (the “SDP Standard”) (Ex 1005), U.S. Patent Application Publication No. 2009/0100496 (“Bechtolsheim”) (Ex 1006), and U.S. Patent Application Publication No. 2010/0010884 (“Cohee”).

C. Obviousness

28. I understand that the prior art may render a patent claim “obvious.” Prior art references (e.g., articles, patents, or other publications) that individually disclose fewer than all elements of a patent claim may nevertheless be relied upon to render a patent claim obvious if the claimed invention would have been obvious to a POSA based on the collective teachings of the prior art and the knowledge of a POSA at the time of invention. A patent claim is obvious if the differences between the subject matter sought to be patented and the prior art are such that the subject matter as a whole would have been obvious, at the priority date, to a POSA to which said subject matter pertains.

29. I understand that obviousness is based on the scope and content of the prior art, the differences between the prior art and the claim, the level of ordinary skill in the art, and secondary indications of obviousness and non-obviousness to the extent they exist. Under the doctrine of obviousness, a claim may be invalid if the differences between the invention and the prior art are such that the subject matter as a whole would have been obvious at the priority date to a POSA.

30. I further understand that obviousness cannot be sustained by mere conclusory statements; instead, there must be some articulated reasoning with some rational underpinning to support the legal conclusion of obviousness. Obviousness must be established by providing a sufficient explanation of how the references may be combined, from the perspective of one with ordinary skill in the art, to arrive at the claimed invention, and why the proffered combination accounts for all the features of each claim.

31. In particular, I understand that an obviousness theory must explain why a POSA would have combined elements from specific references in the way the claimed invention does.

32. I understand that Petitioner has challenged the Challenged Claims of the ’427 Patent as unpatentable based on four different obviousness grounds.

III. THE CHALLENGED PATENT

A. Technical Background

33. At the time of the priority date of the ’427 Patent, November 2008, a number of problems existed in the space of multimedia content delivery systems. In particular, these problems included the complexity related to the process of establishing a connection between two end points that wish to transmit and receive audiovisual material that the user wishes to view, while ensuring that the bandwidth required to facilitate transmission of these materials is reserved.

34. To carry out this process, content delivery systems at the time were required to execute a multi-step process including 1) establishing the connection between endpoints (i.e., the user’s device and the server storing viewing content), 2) reserving bandwidth for the communication session based upon the viewing content, and 3) transmitting a play-list for the viewing content itself, all steps that would require some number of data exchanges, associated network overhead costs, time allocation, and risk of error.

35. A POSA would understand a desire to simplify this process in order to create a more robust and efficient communication session. As such, there existed a need in the art to reduce the total number of messages required to perform these processes.

B. The '427 Patent

36. U.S. Patent No. 9,769,427 is the U.S. national stage application stemming from WO Application No. PCT/JP2009/006140, which in turn claims priority to the filing date, November 18, 2008, of Japanese Patent Application 2008-0294270.

37. The claims generally recite a content delivery system for delivering main content (described as a "user's desired content," *see* Ex 1001 at 1:48-52) and sub content (content that is in addition to the main content) to a user's device. The main and sub content are selected based upon selection criteria sent from the user's device, though the sub content may be selected based on the main content to be provided. In response, at an application server, the server selects the main and sub content to be transmitted. While the connection is established between the server and the user equipment, the server transmits play-list information to the user, which includes identification information for the main content and the sub content and identifies the sequence in which the main and sub content are to be output. In addition, during the connection process, the system is configured to execute a process for guaranteeing a bandwidth required for transmission of the main and sub content. *See , e.g.*, Ex 1001 8:51-63; Fig. 13. This ensures that the user's device, or at least the network between the user's device and the server, has reserved or otherwise mandated, the bandwidth required for the transmission is available during transmission. Previous systems, such as those utilizing the SIP or SDP Standard were unable to perform this

process—at best (and as discussed below) systems utilizing the SDP Standard could only signal bandwidth requirements for a particular media to be transmitted, without a specific process in place to guarantee that bandwidth.

38. During prosecution of the ’427 Patent, Patent Owner, in response to a Non-Final Office Action, argued that “the present system can perform the process of establishing a connection and transmitting play-list information together in order to deliver the playlist information to the user immediately when the connection is established, thereby improving the user experience.” Ex 1002 at 72-73. This provides a further advantage over the prior art by reducing the total number of messages and packets that need to be transmitted between the devices in order to facilitate not only the connection between devices, but also reducing the overall resource overhead costs of establishing the communication session and determining the data to be transmitted between devices. Such a reduction improves the user experience. *Id.*

39. The ’427 Patent therefore provides at least two inventive improvements over content delivery systems that existed at the time. First, it allows for the transmission of main content and sub content to the user, wherein the main content can be selected by the user directly, and the sub content can be selected and transmitted based upon either the user specifically or the main content that is selected. Second, the ’427 Patent teaches transmitting play-list information at a same time that the process for

establishing a connection is executed, which occurs while a process for guaranteeing a bandwidth required for the transmission is executed.

IV. CLAIM CONSTRUCTION

40. Petitioner has proposed three terms that require construction.

A. "equipment specification information"

41. I understand that Petitioner has proposed that the term "equipment specification information" should be construed to mean "an identifier for identifying the user equipment." Petition at 9; Reader Declaration ¶ 63.

42. It is my opinion that this term does not require a construction, and should be accorded its plain an ordinary meaning. However, as explained below, regardless of whether plain and ordinary meaning or Petitioner's proposed construction is used, Petitioner has failed to show that the Challenged Claims are obvious in view of the cited art.

B. "the one or more connection control servers executes a process for guaranteeing a communication bandwidth required for transmitting content data as a process for establishing the connection"

43. I understand that Petitioner has proposed that the term "the one or more connection control servers executes a process for guaranteeing a communication bandwidth required for transmitting content data as a process for establishing the connection" be construed as meaning "a standard process performed by SIP servers

using SIP messages." Petition at 10; Reader Declaration ¶ 64. I disagree with this proposed construction.

44. The '427 Patent actually differentiates between the standard SIP messages (specifically the "OK message", which Petitioner points to) and the actual "bandwidth guarantee process", which it recites. Specifically, the '427 Patent describes that the "OK message" is transmitted either as "a bandwidth guarantee instruction *or* transmission preparation completion notification," '427 Patent (Ex 1001) at 15:49-56, both of which are separate from the actual "bandwidth guarantee process." The '427 Patent goes on to explain the "bandwidth guarantee process" as

> the core IMS part 30 transmits, to the transport functions part 80, the received communication bandwidth information and communication channel specification information for specifying a communication channel between the user equipment 2 and the media server 4b specified by the received media delivery specification information. Thus, the transport functions part 80 execute a process to guarantee the communication bandwidth represented by the received communication bandwidth information on the communication channel specified by the received communication channel specification information (bandwidth guarantee process)

Id. at 15:29-40.

45. This is directly contrary to the Petitioner's (and their expert's) statement that "[t]he specification does not elaborate further on what is meant by 'a process to guarantee a communication bandwidth.'" Petition at 10; Reader Declaration ¶ 64.

The specification clearly provides a further explanation of what the "bandwidth guarantee process" comprises, and thus I am of the opinion that the term should be given its plain and ordinary meaning as understood by a POSA at the time of the invention. To the extent an explanation of the plain and ordinary meaning is required, it is my opinion that a POSA would understand this term to mean "a process as part of the connection process, for reserving or otherwise mandating that a bandwidth is available for transmission."

46. But even further, Petitioner's proposed "construction" should be dismissed. Despite improperly stating that "[t]he specification does not elaborate any further" on the "bandwidth guarantee process at B502," Petition at 24, Petitioner does not actually propose a construction to use. Instead, the Petition merely proposed the construction to be "a standard process performed by SIP servers using SIP messages." *Id.* This "construction" does not actually even construe the indicated term. Petitioner does not identify what the "standard process" comprises, nor how it relates to the '427 Patent.[1] As such, Petitioner's own proposed "construction" only introduces uncertainty where, without it, there would be none.

47. As such, Petitioner's proposed construction should be disregarded, and the term given its plain and ordinary meaning, as understood by a POSA, or to the extent

[1] And as explained further, below, a POSA would understand that the "bandwidth guarantee process" would not be covered by any of the messages exchanged through the SIP Standard. *See infra* at V.A.6

a construction is required, construed to mean "a process as part of the connection process, for reserving or otherwise mandating that a bandwidth is available for transmission."

C. "at a same time . . . transmit[ting] the play-list information . . . to the user equipment which has transmitted the content delivery request."

48. I understand Petitioner has proposed a construction of the phrase "at a same time . . . transmit[ting] the play-list information . . . to the user equipment which has transmitted the content delivery request." However, I disagree with Petitioner's proposed construction.

49. Petitioner, and its expert, state that the '427 Patent "does not elaborate further on the timing of transmitting the play-list information relative to executing the bandwidth guarantee process." Petition at 12; Reader Declaration ¶ 67. But this is an incorrect interpretation or at least a misunderstanding of this claim term. The '427 does not *claim* that the timing of the play-list information is relative to executing the "bandwidth guarantee process." Rather, as the plain language of the claims of the '427 patent demonstrates, the '427 Patent claims to "transmit the play-list information via the one or more connection control servers" "at a same time" that the system executes "a process for establishing the connection." *See* '427 Patent at 37:10-25. The relative timing of the connection process and the play-list

transmission is what is claimed in the ’427 Patent, with the bandwidth guarantee process being executed “as a process for establishing the connection.”

50. In considering the proper scope of the Challenged Claims, the ’427 Patent, contrary to Peloton’s assertion, certainly provides further elaboration on the advantages of timing these processes in the way claimed by the patent. *See id.* at 18:63-19:6 (explaining the timing between establishing a connection and transmission of play-list information). The ‘427 Patent explains that, according to certain embodiments:

> no other message than the connection establishment message need be transmitted for the service control server 4a transmitting the play-list information to the user equipment 2. This means that the number of communications can be reduced among the connection control system 3, the service control server 4a and the user equipment 2. In other words, the processing load and/or communication load required for the connection control system 3, the service control server 4a and the user equipment 2 to exchange messages can be relieved.

‘427 Patent at 19:13-22.

51. This passage clearly describes the nature of the play-list and connection establishment according to the ‘427 Patent. Further, this explanation is consistent with the cited portion of the ’427 Patent’s prosecution history, in which the Patent Owner argued that “the present system can perform the process of establishing a connection and transmitting play-list information together in order to deliver the

playlist information to the user immediately when the connection is established, thereby improving the user experience." Ex 1002 at 72-73. So, contrary to Peloton's apparent interpretation, the timing of the play-list with respect to the bandwidth guarantee process is not the focus of the claim, but rather the timing with respect to the connection process as a whole (which includes, in part, the bandwidth guarantee process), about which the patent elaborates in various parts.

52. But, despite suggesting incorrectly that the '427 Patent does not "elaborate" on the timing of these processes, Petitioner has not actually proposed a construction. Rather, Petitioner has merely proposed a claim scope, stating generally that "the timing of the OK messages . . . is a standard process performed by SIP servers using SIP messages." Petition at 12; Reader Declaration ¶ 67. This provides no clarity to the meaning of the term, and in fact, significantly broadens it to, theoretically, cover any "standard process" executed by "SIP servers using SIP messages." As such, the construction is inappropriate.

53. It is my opinion that the term should be given its plain and ordinary meaning, as understood by a POSA at the time of the invention. To the extent an explanation of the plain and ordinary meaning is required, it is my opinion that a POSA would understand this term to mean "performing the process of establishing a connection and transmitting play-list information together."

V. VALIDITY OF THE '427 PATENT

A. Claims 10, 12, 21 and 33 Are Not Obvious in View of Ueda Combined with the SIP Standard and the SDP Standard (Ground 1)

54. I understand that the Petitioner alleges that the claims 1, 4-9, 14, 16, 18, 20, 22, 32, and 34-36 are obvious in view of Ueda (Ex 1003) combined with the SIP Standard (Ex 1004) and the SDP Standard (Ex 1005).

1. Overview of Ueda

55. Ueda was filed on September 19, 2018 and is titled "Content Providing Device, Data Processing Method." It is directed to "provid[ing] a content providing device . . . whereby content information and so forth employed by a client . . . is provided based on management information." Ex 1003 ¶ 0016.

56. Ueda teaches a content delivery system that utilizes a disc drive 120 containing a (removable) disc 100, which contains various contents 111 to be provided to the user. Ex 1003 ¶¶ 0075-0077, 0079-0083 & Figs. 1, 6. Figure 6, reproduced below, illustrates the overall system of Ueda.

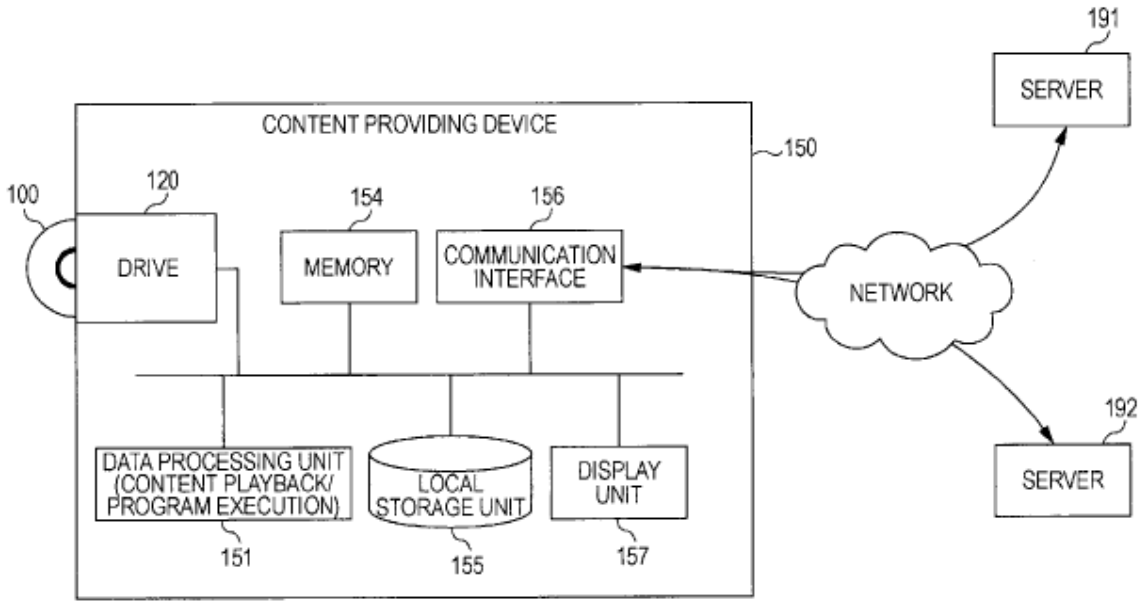

57. In order to manage the content 111 on this disc 100 and what is output to the user, Ueda utilizes a "content management application (BD-J app 1) 116." *Id.* ¶ 0078. According to Ueda, this "content management application" is executed *before* connection with the server and executes a plurality of processing including:

- Confirming with a user whether to execute download;
- Confirming whether the playback device can handle network connection and AACS online functions;
- Providing a URL to be accessed;
- Updating management data in a local storage unit; and
- Accounting processing.

Id. ¶¶ 0128-0134.

58. Based upon a title for playback selected by the user (from within the BD-J app stored on the disc 100, the system sends a request to the (previously identified) server, which implicitly requires identification of an appropriate URL, in order to determine whether there exists additional content to send to the user in response—based upon the ID of the disc 100 that was sent. *Id.* ¶¶ 0226-0229. Where additional content (called "sub content") is available, the server can respond to the request by sending the content such that the content providing device 150 "obtains a sub content which is available along with playback of a content stored in the disc 100." Ueda ¶ 0119. Where there exists no new content to be provided, the processing is ended. *Id.* ¶ 0230.

2. Overview of the SIP Standard

59. The "SIP: Session Initial Protocol" ("SIP Standard") is an Internet protocol that describes an "application-layer control (signaling) protocol for creating, modifying, and terminating sessions with one or more participants." SIP Standard at 1 (Abstract). In establishing and terminating multimedia communications, the SIP standard supports five different primary "facets":

- User location;
- User availability;
- User capabilities;
- Session setup; and

- Session management.

Id. at 9. However, the SIP Standard, on its own, is not responsible for the transmission of the requested media content. Rather, the SIP Standard provides "primitives" that can be used to "implement different services," but does not itself "provide services." *Id.* at 10.

60. As a result, SIP is not itself the transport protocol responsible for transmitting media, and in fact, SIP "runs on top of several different transport protocols," *id.* at 1 (Abstract), and "works independently of underlying transport protocols and without dependency on the type of session that is being established." *Id.* at 9.

3. Overview of the SDP Standard

61. The "SDP: Session Description Protocol" ("SDP Standard") is, like the SIP Standard, an internet protocol. The SDP Standard is specifically intended for "describing multimedia sessions for the purpose of session announcement, session invitation, and other forms of multimedia session initiation." SDP Standard, Ex 1005, at 1 (Abstract). Its stated purpose is to "convey information about media streams in multimedia sessions to allow the recipients of a session description to participate in the session." *Id.* at 5.

62. In order to facilitate this, the SDP Standard provides the following information:

- Session name and purpose;

- Time(s) the session is active;
- The media comprising the session; and
- Information needed to receive the relevant media.

Id. In addition, the SDP Standard can also include: information about the bandwidth to be used by the session[2] and contact information for the person "responsible for the session." *Id.*

63. This information is "entirely textual" comprising a series of lines of simple text denoting different fields and values. *Id.* at 7. These values (in the form of the "v=" "o=" "t=" and others described throughout) in turn provide the "description" for that particular media session – where a value is not understood, it must be ignored. *Id.* at 8-9. Like the SIP Standard, though, the SDP Standard is primarily a signaling protocol. That is, it does not implement any functions or methods directly, but rather, provides (as its name implies) descriptive information to facilitate and improve a session.

4. <u>Motivation to Combine Ueda with the SIP Standard</u>

64. Petitioner relies upon the combination of Ueda, the SIP Standard, and the SDP Standard for Ground 1 of its Petition. *See* Petition at 3-4, 22-34; *see also* Reader Declaration (Ex 1008) ¶¶ 102-110. The Petition, and corresponding expert

[2] Though I note, this is very different from taking any actions to ensure or reserve such a bandwidth – it is simply an identification of bandwidth related to transmission for a particular media session.

declaration, attempt to provide a motivation to combine these references. Ultimately, though, neither the Petition nor Petitioner's submitted expert declaration identify a sufficient motivation for a POSA to combine these references as described.

65. The Petition first attempts to provide a motivation to combine Ueda and the SIP Standard. Petition at 22-23. Petitioner admits that Ueda "does not explicitly describe the intermediate servers that would necessarily and inherently intermediate between and connect the content providing 150 and the server 191." Reader Declaration ¶ 103. According to Petitioner's expert, Dr. Reader, there are three alleged advantages to combining Ueda with the SIP Standard: "to assist Ueda's content providing device 150 with locating the server 191 on the Internet, signaling its desire to communication with the server 191, and characterizing the communication session." *Id.* ¶ 104.

66. However, neither the Petition, nor Dr. Reader, provide an adequate explanation for why a POSA would be motivated to modify Ueda in order to incorporate the features of the SIP Standard. Dr. Reader proposes three reasons for why "a POSITA would have been motived to combine the teachings in Ueda . . . with the teachings in the SIP Standard:" "as to provide intermediating resources for media sessions between agents to yield the predictable result of establishing connections between the agents." *Id.*

67. This explanation, though, does not address why a POSA would modify Ueda to solve a problem that is neither identified nor suggested by Ueda or the SIP Standard. The locating services of SIP's proxy servers are intended for scenarios in which the user agents are not at a fixed, known address. This differs from the scenario envisaged by Ueda, in which the desired media contents are available for access on demand and stored on a server with a known "URL to be accessed", which therefore, does not need to be discovered. Ueda ¶ 0132. This process is described in Figure 15, reproduced below. As explained in Ueda, the BD-J disc "uploads the identifier (ID) corresponding to the disc recorded in the disc obtained in step S282, and a list of the commercial contents which the content providing device 150 stores in the local storage unit 155." Ueda (Ex. 1003) ¶ 0228. In response, the *already identified* server can provide one of two responses:

- "[W]herein the server holds no new commercial content to be provided to the user, the processing is ended." *Id.* 0230.
- "[W]herein the server holds a new commercial content to be provided to the user, in step S285 the server transmits the latest commercial content to the content providing device on the user side." *Id.*

FIG. 15

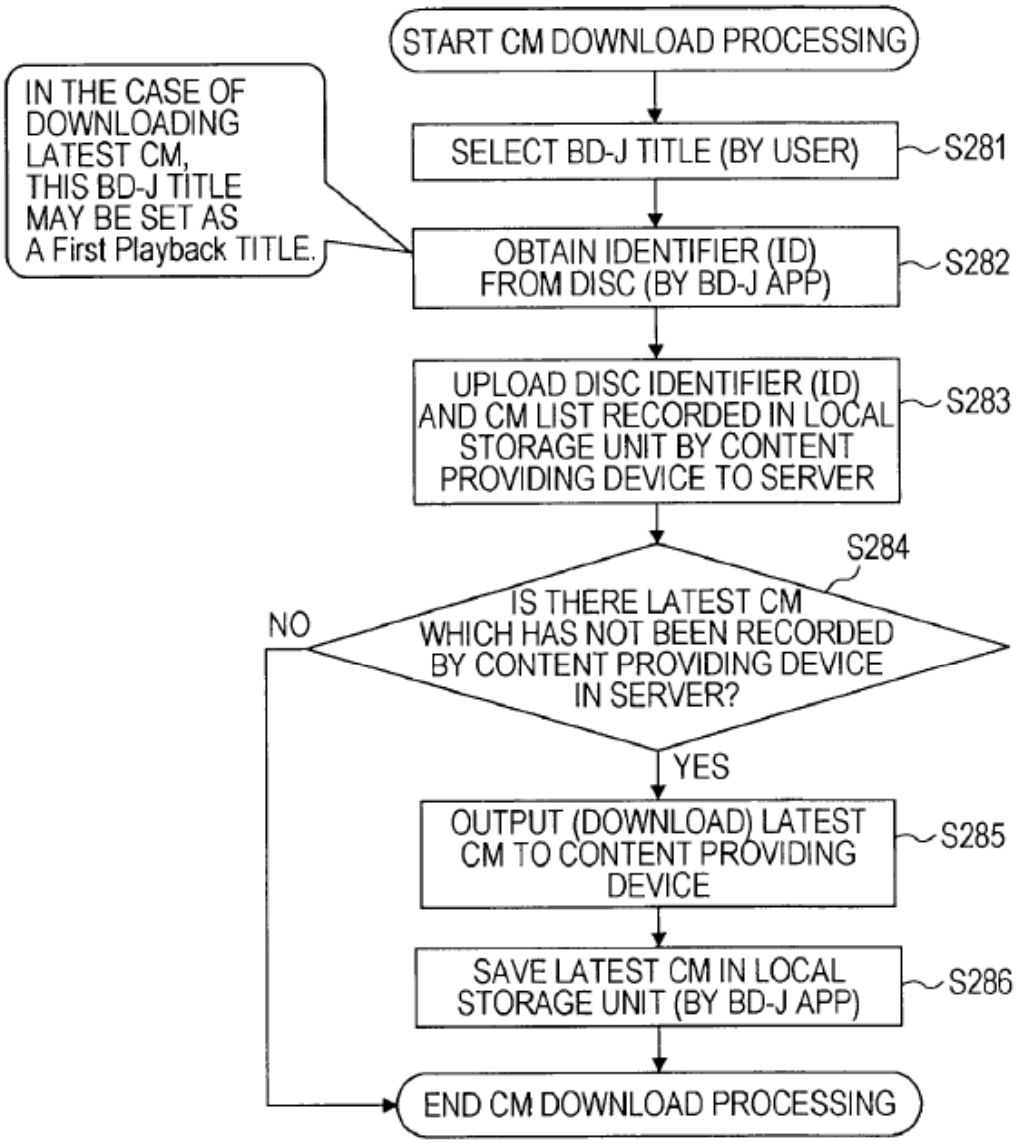

68. As further explained, the server to be accessed is provided through the "First Content Management Application (BD-J app 1)," which includes software for "providing a URL to be accessed." *Id.* ¶¶ 0127-0132. However, this URL identification is performed, explicitly, "before connection with the server" and

implies that the server location must be located on the disc itself. *Id.* ¶¶ 0128-0132. A POSA would understand that conventional techniques, including the use of the well-known Domain Name System (DNS) lookup (if the server address is provided as a human-readable domain name) and IP routing protocol, could be used to perform this step, and thus integration of the SIP Standard is at best irrelevant and unnecessary.

69. This is consistent with the overall system described in Ueda, which utilizes software located on a physical disc (in the primary embodiments, specifically a BD-J disc, which is a "Java . . . application to be applied to a Blu-ray Disc," *id.* ¶ 0126), which identifies the server where further content *may* be located but does not contemplate a process for locating further servers—instead Ueda explicitly contemplates that "[i]n a case wherein the server holds no new commercial content to be provided to the user, the processing is ended." *Id.* ¶ 0230. With regard to the second claimed motivation to combine, Ueda already describes in detail the steps by which the user (content providing device 150) signals its desire to communicate with server 191. *Id.* ¶¶ 0121-0141. There is no benefit to employ the SIP standard for this purpose, whereas there is an incompatibility with SIP in the processing steps executed by Ueda's content management applications. The incompatibility is due to at least two factors. First, in Ueda, the second and third content management applications are themselves downloaded ("obtained from the server") and executed.

Id. ¶¶ 0136, 0141. Execution of these applications ultimately allows for download of the selected media. *Id.* ¶ 0172. In contrast, SIP does not support the downloading of content management applications from a server that are "executed at the time of recording download data" *Id.* ¶ 0141. Second, unlike the SIP standard, in which the requester directly specifies the media stream of interest, Ueda's server determines what content management application to provide to the content providing device on the basis of identification information transmitted to the server by the content providing device and, for example, by "content usage condition information corresponding to a contentID or userID" held by the server. *Id.* ¶¶ 0147-0148. In this respect, Ueda's server determines, in part, what options are provided to the user for selection of download content. *Id.* ¶ 0149.

70. Furthermore, in contrast to Petitioner's expert's statement that a POSA would be motivated to combine these references in order to transmit information "characterizing the communication session," Ueda's transmission already does this and thus a POSA would not be motivated to look to the SIP Standard to implement this functionality. Even assuming that Ueda did *not* include information to characterize a communication session, though, Petitioner still fails to identify any motivation for why a POSA would wish to incorporate such information into a content request, as proposed.

71. Ueda discusses the use of various information that "characterize[es] the communication session" in order to determine which content to request from the content server, which is outlined by the process in Figure 15, reproduced below. As shown, the user selects a BD-J title S281, which in turn triggers the BD-J app to select an "identifier" located on the physical disc S282. This identifier (ID) is then transmitted to the server (selected previously before connection based on information already located on the disc, as set forth above), which determines whether or not a new "CM" is to be downloaded S284. If so, the "latest CM" is transmitted to the user device S285, and if not, the processing is ended. *Id.* ¶¶ 0227-0230. Ueda also includes a variety of additional information that "characterizes" (as alleged by Peloton) the communication session, including "user ID," "content providing device ID," "an allowed processing list," and even "management data." Id. ¶¶ 0151, 0169, 0170, 0485. All of this information serves to "characterize" the communication session by providing additional metadata related to the nature of the session as well as information on what will or will not be transmitted as part of the communication session. Accordingly, Petitioner has not identified any reason why a POSA would be motivated to include further information "characterizing the communication session," and notably, doesn't cite to any portion of Ueda that would provide such motivation.

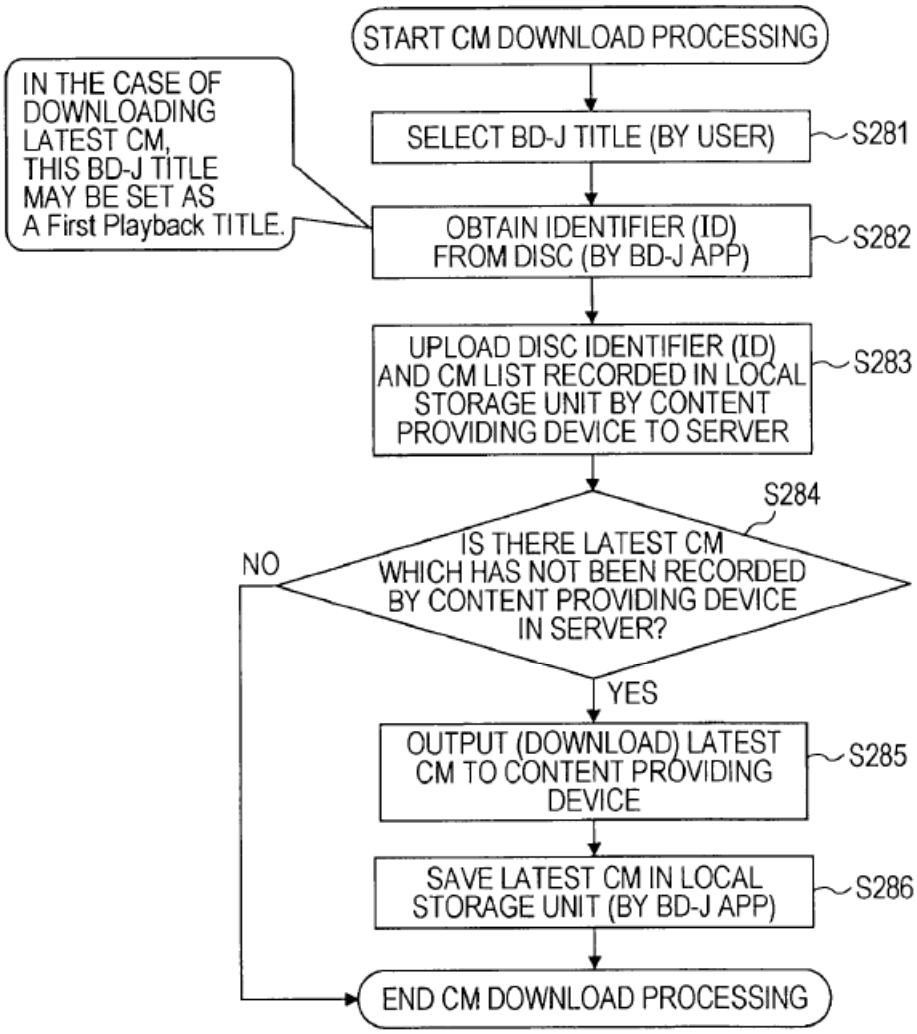

72. Petitioner further argues that a POSA would have been motivated to combine Ueda with the SIP Standard in order to provide "[s]ecurity" in particular as the SIP Standard teaches 'that proxy servers 'authenticate and authorize users for service' and '[r]ecipients of requests can authenticate the originator of a request in order to ascertain that they are who their From header field claims they are'" Petition at 23 (quoting Ex 1004, pp. 1, 37).

73. However, this again is a problem for which Ueda provides a solution, and thus there is no reason to add the further complication of additional proxy servers, or the redundancy of using the separate authentication and authorization provisions of the SIP Standard. As noted above, certain embodiments of Ueda do not even consider the identity of the user, instead relying on the content ID located on the physical disc in order to transmit the requested content. *See supra* ¶ 71. However, even in those embodiments where user identification is employed (such as the embodiment illustrated in Figure 25, reproduced below), authentication is already disclosed within Ueda, performing the security functioning that Petitioner alleges the SIP Standard may provide. *See also* Ueda ¶¶ 0340, 0344, 0354, 0360, 365.[3] Ueda already describes the processing performed by the server in "generat[ing] an allowed processing list" "based on the identification information," *id.* ¶ 0148, as well as BD-J app 3 "for confirming that the received data is valid data without tampering," *id.* ¶ 0152, and explicitly describes authentication processing, "performed in accordance with authentication conditions set arbitrarily by the server 191." *Id.* ¶¶ 0344-346. Moreover, Ueda's execution of "settlement processing" (payment, e.g., by credit card) serves as an additional layer of authorization already included. *Id.* ¶ 0150. Accordingly, a POSA would not be motivated to combine Ueda with SIP, since

[3] Petitioner does not identify, explain, or justify how this authentication is different from that provided by the SIP standard, implying instead that Ueda does not contain such security. *See* Petition at 23.

doing so would only introduce conflicts without improving the existing capabilities described by Ueda

74. However, this again is a problem for which Ueda provides a solution, and thus there is no reason to add the further complication of additional proxy servers. As noted above, certain embodiments of Ueda do not even consider the identity of the user, instead relying on the content ID located on the physical disc in order to transmit the requested content. *See supra* ¶ 71. However, even in those embodiments where user identification is employed (such as the embodiment illustrated in Figure 25, reproduced below), authentication is already disclosed within Ueda, performing the security functioning that Petitioner alleges the SIP Standard may provide. *See also* Ueda ¶¶ 0340, 0344, 0354, 0360, 365.[4]

75. Petitioner provides no reason why a POSA would ignore this explicit teaching within Ueda in order to, instead, implement the more technologically complicated features of proxy servers allegedly taught by the SIP Standard, in order to achieve, substantially the same security features already disclosed by Ueda. As such, based upon the features and motivations identified by Petitioner, it is my opinion that Petitioner has not provided sufficient motivation for a POSA to combine Ueda with the SIP Standard as proposed.

[4] Petitioner does not identify, explain, or justify how this authentication is different from that provided by the SIP standard, implying instead that Ueda does not contain such security. *See* Petition at 23.

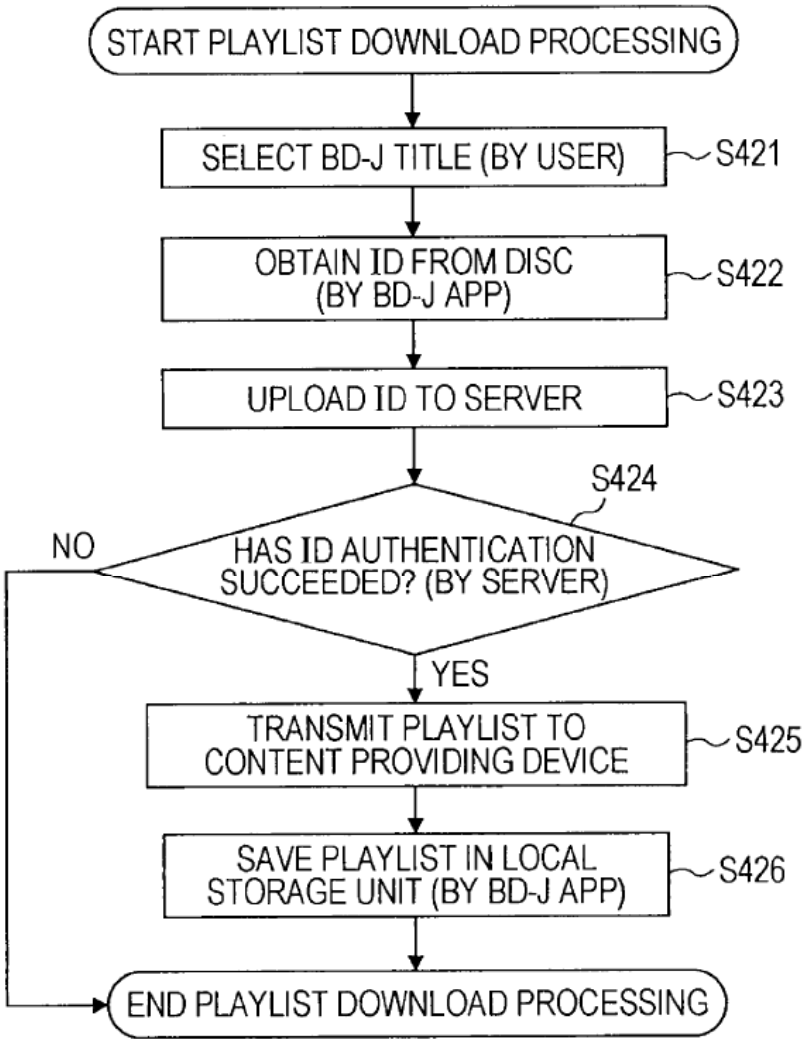

76. Regardless, though, and as explained below, even if the references are combined, as proposed by Petitioner, this combination fails to disclose, teach, or suggest all of the features of the Challenged Claims of the '427 Patent.

5. *Motivation to Combine Ueda and the SIP Standard with the SDP Standard*

77. In addition to combining Ueda with the SIP Standard, Petitioner also alleges that a POSA would be motivated to further combine Ueda and the SIP Standard with

the SDP Standard. According to Petitioner, since the SDP Standard states that "SIP messages . . . are commonly formatted using SDP," Petition at 24; Reader Declaration ¶ 110 (internal emphasis removed); *see also* Ex. 1005 at 4, § 3.1.

78. While it may be common to format SIP messages carrying session descriptions using SDP, Petitioner provides no explanation, and as a result no motivation, for why a POSA would choose to modify Ueda with SDP. Petitioner argues that a POSA "would have been motivated to combine . . . so as to convey media details, transport addresses, and other session description metadata[5] to participants for initiating multimedia sessions." Reader Declaration ¶ 110; *see also* Petition at 24.

79. Where Petitioner's argument fails, though, is in identifying any motivation or reason for why a POSA would actually need (or desire) this information to be included as a supplement to what is already provided in Ueda. Ueda recognizes a particular need in the art for "a content providing device, data processing method, and computer program whereby content information and so forth employed by a client is obtained to manage client information, and a content is provided based on management information." Ueda ¶ 0016. In order to facilitate this content provision,

[5] No further information on this term is provided. As such, I have interpreted "other session description metadata" to include any information related to the communication session.

Ueda provides several pieces of information, correlating with the information that Petitioner alleges is provided by SDP.

80. Petitioner identifies three pieces of information that use of the SDP Standard would provide:

- "[M]edia details"
- [T]ransport addresses" and
- "[O]ther session description metadata"

Reader Declaration ¶ 110; *see also* Petition at 24.

81. But all of this information is *already* provided for in Ueda, and Petitioner provides no further explanation of justification for adding in SDP to provide information that is already handled within Ueda, and identifies no further advantages that would be provided by the use of the SDP Standard. To exemplify this, an annotated version of Figure 30 of Ueda is provided below, which shows "media details," in the form of content identification, which is transmitted from the user device 150 (after selection by the user on the BD-J app at step S543) to the server 191. This also includes the "transport address[]" for the server, since, as noted previously, the BD-J app provides "a URL to be accessed" with this URL corresponding to the server address, pre-programmed into the BD-J app, for identifying the server to which the user device should transmit the content ID, and finally, Ueda also already transmits certain "description metadata" information,

including information about content that has already been viewed. This includes the "'Titles #1 and #2 Viewed and Listened"' information" shown below, and can also include the other information (such as the content providing device identifier, user identification information, or user information) noted in Figure 30.

FIG. 30

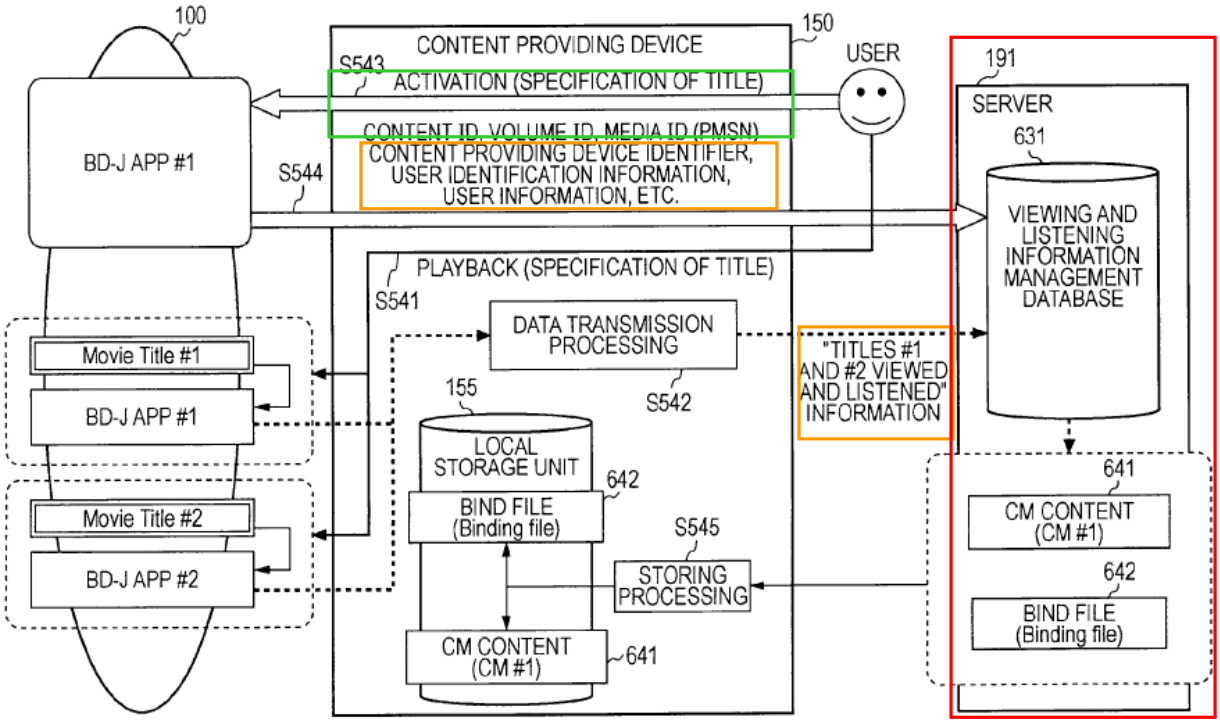

82. Since this information is *already* conveyed in the system of Ueda, Petitioner has not provided any argument or motivation for what a POSA would actually turn to in the SDP Standard in order "to convey" this information. Even if, for the sake of argument, it is conceded that the SIP and SDP Standards are related and cross-compatible, as Petitioner alleges, Petitioner has still failed to provide a reason to combine these with Ueda. Each of the proposed "features" or "advantages"

identified are features that are already included in Ueda. Furthermore, Petitioner does not provide any statement regarding whether and how SIP and SDP may be integrated into Ueda, but merely provides conclusory statements that a POSA "would have been motivated" to combine each of these references, with no discussion or even suggestion of how such modifications would affect the functioning of Ueda, which clearly contemplates a direct connection between the user's device 150 and the server 191, without the need for proxy/intermediate servers (as required by the Challenged Claims of the '427 Patent). *See, e.g.*, Figs. 6, 7, 17-19, 21, 24, 26, 29, 30.

6. ['427 Claim 10] SIP Standard does not teach "the one or more connection control servers executes a process for guaranteeing a communication bandwidth required for transmitting content data as a process for establishing the connection" (claim element [10j-1])

83. Petitioner relies upon the SIP standard as allegedly disclosing "the one or more execution connection control servers executes a process for guaranteeing a communication bandwidth required for transmitting content data as a process for establishing the connection." Petition at 51-53; Reader Declaration at ¶¶ 210-14.

84. Petitioner points to several responses that can be generated according to the SIP Standard including a "200 (OK) message" as well as "a 3xx, 4xx, 5xx, or 6xx response", which are sent "[i]f the invitation is not accepted." Petition at 51-52; Reader Declaration ¶ 211. However, Petitioner is incorrect in suggesting that these messages comprise a "bandwidth guarantee process" as recited by the claims.

85. First, as a fundamental function of the SIP Standard, none of these messages mandate a particular action at the receiving device (in this case, either the user's device or the server receiving the request). The SIP Standard is an "application-layer control (signaling) protocol," SIP Standard (Ex 1004) at 1 (Abstract), which can "enabl[e] Internet endpoints (called user agents) to discover one another and to agree on a characterization of a session they would like to share." SIP Standard at 9. Very explicit in the standard, and quite fatally to Petitioner's argument, it states "SIP cannot, and does not, provide *any kind of network resource reservation capabilities*." SIP Standard at 10 (emphasis added).

86. The SIP Standard is, at its core, a signaling protocol, in which different end points agree upon standard labelling for packets to be sent. While the standard does allow for methods/functions to be invoked, it is not the Standard itself that defines and implements these functions. *See, e.g.*, *id.* at 11.

87. The '427 Patent, which does discuss the SIP Standard, contemplates exactly this scenario, in which a separate transport protocol is used in order to actually transmit the requested content/data using a "predetermined communication protocol (in this example RTP (Real-time Transport Protocol))." '427 Patent at 12:13-16. A POSA would understand that the SIP Standard, as a means for establishing, modifying and terminating communication sessions, does not provide commands

that must be executed by the receiver. As such, it cannot "guarantee" a bandwidth required for a particular transmission.

88. Petitioner's argument further fails because even the identified SIP messages do not actually "guarantee" a bandwidth as required by the claim. Petitioner admits as much, conceding that "when a proxy server receives a 606 Not Acceptable Response with Warning 370, the proxy server recognizes that there is insufficient communication bandwidth to establish the session or transmit the requested media data, and thereafter *cancels the process for establishing the session*." Petition at 52-53 (emphasis added); Reader Declaration ¶ 212.

89. Petitioner makes no attempt to square this explicit cancellation step (before a connection is established) with the Challenged Claims' requirement to "execute[] a process for guaranteeing a communication bandwidth required for transmitting content data as a process for *establishing the connection*." *See, e.g.,* '427 Patent, Claim 1 (emphasis added). The SIP Standard is explicit, and Petitioner admits, that where bandwidth is not sufficient, it merely provides a warning response indicating such—it is incapable of enforcing any particular action taken by the client receiving this warning. Rather, the decision of what to do in this situation is left up to the implementer.

90. This failing is true of all of the "messages" and "warnings" that Petitioner identifies as part of the SIP Standard. With each of these, including the "Insufficient

bandwidth" header of Warning 370, Petition at 48, serving as a possible explanation for a 606 "Not Acceptable" failure, the SIP Standard is not, and cannot, perform any process to "guarantee" (or reserve, as noted above) a bandwidth.

91. Petitioner's position thus suffers from a set of mutually exclusive deficiencies:

- If the server responds with a 6xx response (or any of the 3xx, 4xx, or 5xx messages), then a connection is *not* established, and thus the Standard fails to teach a bandwidth guarantee that "establish[es] a connection" as required by the claims; or
- If the client ignores these response codes (since, as noted above, the SIP Standard does not possess the ability to mandate particular content or behaviors) and a session is initiated, despite these warnings, then the server has failed to "guarantee a bandwidth" as also required by the claims.

92. Thus, Petitioner has failed to show that Ueda, in combination with the SIP Standard, discloses "the one or more connection control servers executes a process for guaranteeing a communication bandwidth required for transmitting content data as a process for establishing the connection."

7. ['427 Claim 10] SIP Standard in view of SDP Standard does not teach "at a same time that the one or more connection control servers executes a process for guaranteeing a communication bandwidth

required for transmitting content data as a process for establishing the connection" (claim element [10j-2])

93. As noted above, the SIP Standard does not disclose or suggest "guaranteeing a communication bandwidth . . . as a process for establishing the connection." Petitioner also alleges that Ueda, in combination with both the SIP Standard and the SDP Standard, teach "at a same time that the one or more connection control servers executes a process for guaranteeing a communication bandwidth required for transmitting content data as a process for establishing the connection." I disagree.

94. Tellingly, Petitioner does not include the full scope of this claim element in its Petition. This element, in full, reads "at a same time that the one or more connection control servers executes a process for guaranteeing a communication bandwidth required for transmitting content data as a process for establishing the connection, *transmit the play-list information via the one or more connection control servers to the user equipment which has transmitted the content delivery request*." (emphasis added). Petitioner appears to read this play-list transmission element, at least in its discussion of this element, as separate and apart from the "connection" step.

95. As discussed above, the claim requires that the bandwidth guarantee process (as part of the connection process), and transmission of the play-list information be performed at the same time. In order to reach this element, Petitioner relies upon the combination of the SIP Standard and the SDP Standard. However, it is my opinion

that this combination (even assuming that these references can be properly combined with Ueda) fails to disclose this element in its full scope.

96. First, the claim requires that "play-list information" be transmitted. Play-list information, in the claim, is defined as

> information containing the main content identification information contained in the content delivery request and the selected sub content specification information, and . . . information indicating a sequence in which the main content identified by the main content identification information and the sub content specified by the selected sub content specification information are output.

See, e.g., '427 Patent at 37:21-30; 41:4-15; 42:17-27.

97. Yet, Petitioner alleges that the SDP Standard "teaches that an SDP description . . . can contain ***both*** bandwidth information . . . ***and*** information specifying the media." Petition at 56 (emphasis in original). No mention of a play-list, let alone play-list information as defined in the Challenged Claims, is identified. This weakness exists in each of the "fields" of the SDP Standard that Petitioner has identified:

- The "x-" and "p-" header fields are explicitly listed as being used to "transmit implementation-specific or vendor-specific information." Petition at 55; Reader Declaration ¶ 223. Petitioner then concludes, with no explanation that the "playlist" of Ueda could have been inserted into these fields. *Id*; Petition at 56-57. Yet, no explanation is provided as to how or why the alleged playlist

of Ueda is "implementation-specific or vendor-specific information" or why a POSA would choose these fields.

- Similarly, the "a=" "u=" and "i=" fields, identified as "fields . . . for specifying information about the media pertaining to the media session," suffer from the same weakness *Id.* at 57. Again, no explanation actually relating these fields to the playlist of Ueda, or identifying *why* a POSA would insert a full playlist into any of these fields in provided, but merely a conclusion that a POSA "would" have done it.
- Finally, the Petition also identifies the "m=" field, corresponding with "media field descriptions" as a potential field to contain Ueda's playlist. *Id.* But yet again, no explanation is provided that explains *why* a POSA would be motivated to combine Ueda's playlist with this field, or even how Ueda's playlist qualifies as a "media field description."

98. With each of these, Petitioner provides only a cursory, conclusory statement that "it would have been obvious" to a POSA to implement the playlist of Ueda with each of the fields described in the SDP Standard. However, these mere conclusions are not supported by any explanation or reasoning.

99. What Petitioner appears to be doing is reading the Challenged Claims and concluding that, a POSA at the time *could have* performed or implemented these features. However, the Petition completely fails to identify any motivation *in the art*

itself that would provide a motivation to perform or implement these features.[6] Absent such a motivation, there is no motivation in Ueda, the SIP Standard, or the SDP standard to import the entire playlist of Ueda into the descriptor fields of the SDP Standard.

100. Looking to Ueda itself, it actually teaches away from providing the playlist *at the same time* that the connection is established. As illustrated in Figure 25, reproduced below, which shows "a flowchart for describing a download processing sequence of a playlist," Ueda ¶ 0056, the *authentication* step S423 must be completed (and successful) *before* the playlist is transmitted. This is described as "[i]n a case wherein the authentication has succeeded, the processing proceeds to step S425, where based on the disc identification information . . . the server obtains the playlist corresponding to the identification information from the database to transmit this to the content providing device." *Id.* ¶ 0365. Since Ueda specifically waits until authentication is complete before transmission of the playlist, it specifically teaches away from transmitting the playlist along with the connection information.

[6] I understand that such reasoning is called "hindsight bias" in the practice of patent law, wherein the motivation to combine certain references to reach a particular result is provided *only* within the patent (or patent application) itself. I further understand that hindsight bias is impermissible to use when arguing against the patentability of the claims.

FIG. 25

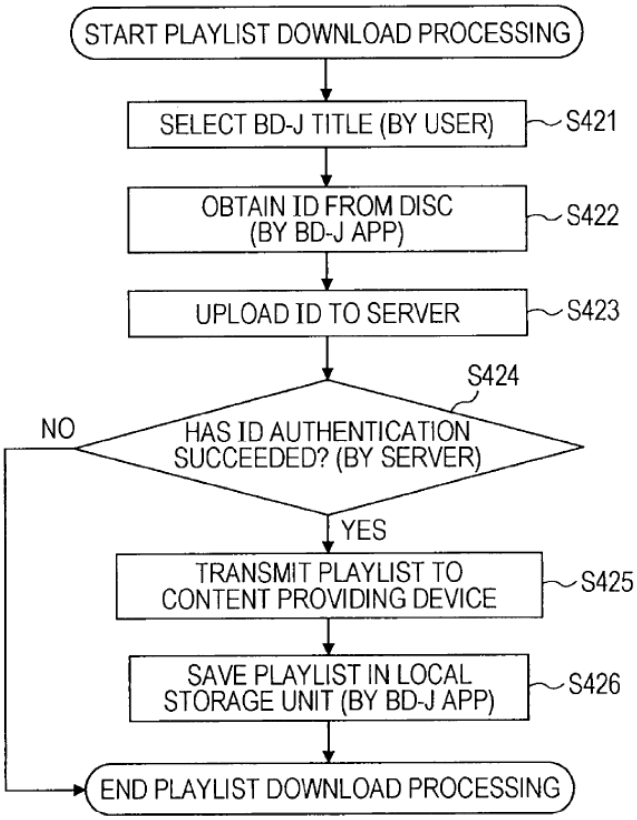

101. Petitioner neither addresses nor reconciles this mandated ordering of Ueda with its proposed combination, which would prevent implementation of the proposed combination with the SDP Standard, in which the playlist is transmitted as part of the "Session Initiation," even if assuming, for the sake of argument, that the SDP Standard does disclose transmitting the noted fields at a same time that the SIP Standard executes.

8. <u>Claim 12 Is Not Obvious In View of the Cited References</u>

102. Claim 12 depends, directly, from claim 10 of the '427 Patent. As discussed above, Petitioner has failed to submit adequate evidence showing a motivation to

combine Ueda, the SIP Standard, and the SDP Standard, as proposed. *See supra* Sections V.A.4 and 5. Further, and as discussed above, even if the references are combined as proposed, this combination fails to disclose each and every element of claim 10 of the '427 Patent. *See supra* Sections V.A.6 and 7.

103. As such, it is my opinion that Petitioner has failed to demonstrate that claims 4-9 are obvious in view of the cited references.

9. Claims 21 and 33 Are Not Obvious In View of the Cited References

104. Claims 21 and 33 are each in independent form and recite (as shown below) at least one element, which, as discussed above, is not disclosed, taught, or suggested in the cited art relied upon by Petitioner. *See supra* Sections V.A.6 and 7.

105. Claim 21 recites (in relevant part):

- 21[j-1]: "the one or more connection control servers executes a process for guaranteeing a communication bandwidth required for transmitting content data"
- 21[j-2]: "at a same time that the one or more connection control servers executes . . . a process for establishing the connection, transmit the play-list information via the sixth receiver to the user equipment"

106. Claim 33 recites (in relevant part):

- 33[i-1]: "the one or more connection control servers executes a process for guaranteeing a communication bandwidth required for transmitting content data"
- 33[i-2]: "at a same time that the one or more connection control servers executes . . . a process for establishing the connection, transmit the play-list information via sixth receiver to the user equipment"

107. These two elements, repeated substantively identically in each of claims 21 and 33 differentiate each claim from the cited art, as discussed above with respect to claim 1. *See supra* Sections V.A.6 and 7. As such, it is my opinion that Petitioner has failed to show that the Challenged Claims are obvious.

B. Claims 10, 12, 21, and 33 Are Not Obvious in View of Ueda Combined with the SIP Standard and Bechtolsheim (Ground 2)

1. Overview of Bechtolsheim

108. U.S. Patent Publication No. 2009/0100496 to Bechtolsheim claims priority to U.S. Provisional Patent Application No. 60/794,419, filed on April 24, 2006.

109. Bechtolsheim is directed to a "media streaming system" that can be "configured to format an incoming media content stream." Bechtolsheim ¶ 0010. This can allow for certain "on-demand" streams to be delivered to a user, through management of "multiple concurrent streams that may be viewed by subscribers." *Id.* ¶ 0023. In one embodiment, this includes a "content on demand (COD)

application server 160, and a system resource manager (SRM) 165 that are coupled to the stream management system 145." *Id.* ¶ 0024.

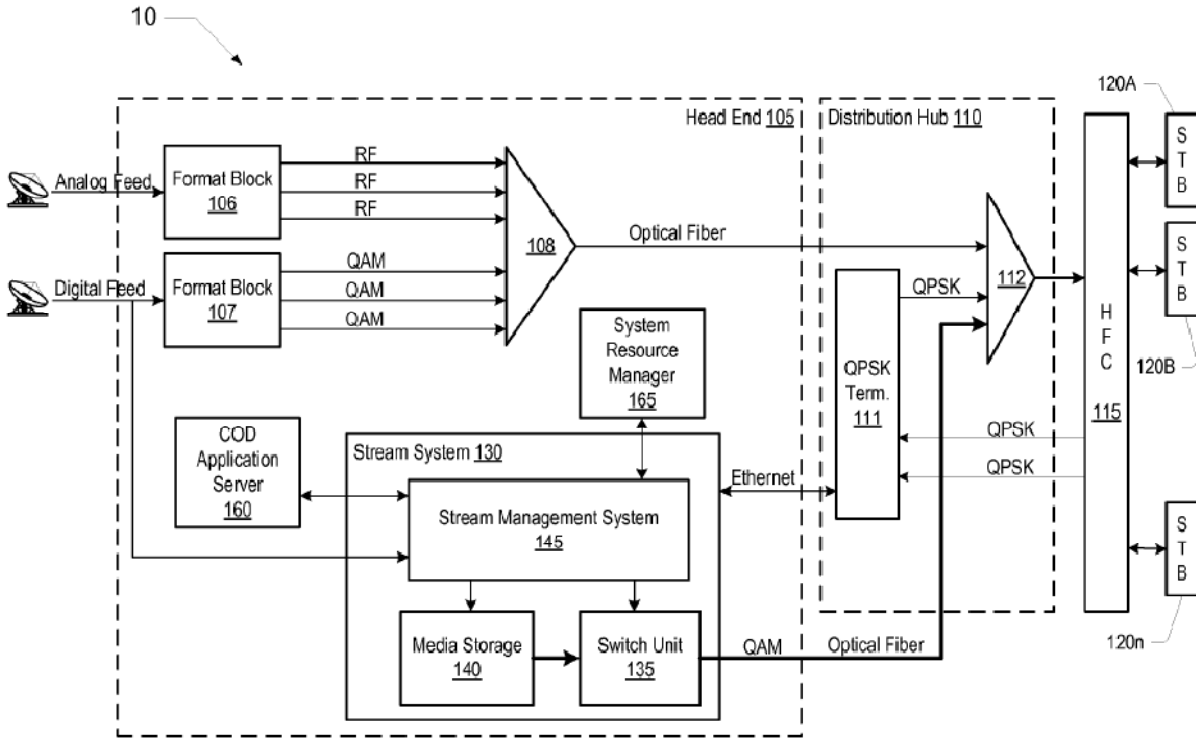

FIG. 1

110. Using these components, the system of Bechtolsheim can "take[] input MPEG-2 transport streams or program streams and produce[] the on-disk format of video streams, as well as metadata necessary for content loading and trick play modes." *Id.* ¶ 0032. This metadata can be transmitted via a "metadata file" containing the title for each content that is to be transmitted to the user. *Id.* ¶ 0034. This metadata can include "the title name, the title encoding (e.g., UDP/IP or RTP/UDP/IP), and the list of video segments in the title, and each segment's associated metadata" including "timing information for the segment as a whole (e.g.

bandwidth requirements and duration), the default block size for the segment, the timing information for each jumbogram within the segment, and the filename of the file containing the video data (in blocks)." *Id.* While Bechtolsheim does disclose communication of the bandwidth for the audiovisual content as a whole, where the "target bandwidth is too small, the import preprocessor 148 may be configured to issue warnings and drop data in order to meet the schedule." *Id.* ¶ 0038.

2. Motivation to Combine Ueda with the SIP Standard

111. As noted above, Petitioner has not shown that a POSA would be motivated to combine Ueda with the SIP Standard. *See supra* Section V.A.4. As such, Petitioner's second ground fails on this basis alone.

3. Motivation to Combine Ueda and the SIP Standard with Bechtolsheim

112. As with the SDP Standard, Petitioner's proposed combination of Ueda, the SIP Standard, and Bechtolsheim is also insufficient.

113. According to Petitioner's cursory discussion for combining Ueda, the SIP Standard, and Bechtolsheim, a POSA would have been motivated to combine Bechtolsheim with Ueda in order to "maintain video quality and avoid requiring a higher bandwidth than available." Petition at 24-25; Reader Declaration ¶ 111. The alleged "motivation" for this is Bechtolsheim's statement that "[A] stream which consistently requires higher bandwidth than the configured rate may produce [] poorer quality video." Petition at 25; Bechtolsheim (Ex. 1006) ¶ 0038. However, just

before this quote, and conveniently excluded by the Petitioner, Bechtolsheim also states that "[i]f this target bandwidth is too small, the import preprocessor 148 may be configured to *issue warnings and drop data* in order to meet the schedule." *Id.* As such, contrary to Petitioner's statement that Bechtolsheim teaches "guaranteeing this bandwidth," Petition at 24, Bechtolsheim actually teaches the opposite: reducing the *content* to be streamed by dropping some of the frames to match an available bandwidth – No guarantee is provided.

114. Petitioner also provides, in a single sentence, a justification for combining Bechtolsheim with the SIP Standard, for the purpose of "describing multimedia sessions and timing information." *Id.* at 25; *see also* Reader Declaration ¶ 112. This conclusion does not discuss an actual motivation to combine these references merely concluding that it would "provide a protocol for describing multimedia sessions and to provide timing information." *Id.* It is unclear which reference would provide which of these features.

115. But Petition's argument also lacks, with respect to both Ueda and the SIP Standard, any explanation as to *how* a POSA would integrate these with Bechtolsheim. Not explanation is given for how one could, or would, integrate the metadata file of Bechtolsheim with either the system of Ueda, or the descriptions of multimedia sessions provided in the SIP Standard.

116. For this reason, Petitioner's proposed combination of Ueda, the SIP Standard, and Bechtolsheim must fail.

4. ['427 Claim 10] SIP Standard does not teach "the one or more connection control servers executes a process for guaranteeing a communication bandwidth required for transmitting content data as a process for establishing the connection" (claim element [10j-1])

117. As explained above, the SIP Standard fails to teach "the one or more connection control servers executes a process for guaranteeing a communication bandwidth required for transmitting content data as a process for establishing the connection. *See supra* Section V.A.6. As such, Petitioner's second ground fails.

5. ['427 Claim 10] SIP Standard in view of Bechtolsheim does not teach "at a same time that the one or more connection control servers executes a process for guaranteeing a communication bandwidth required for transmitting content data as a process for establishing the connection" (claim element [10j-2])

118. As noted with respect to the SDP Standard, Petitioner has excluded the second portion of this claim term, "transmit the play-list information via the one or more connection control servers to the user equipment which has transmitted the content delivery request." But regardless, Petitioner's argument fails to show that Bechtolsheim discloses this process.

119. Petitioner admits that Bechtolsheim does not teach executing a process for guaranteeing a communication bandwidth *at a same time* that play-list information is transmitted to the user device. In fact, Petitioner does not even allege that Bechtolsheim executes these processes at a same time (or together). Rather,

Petitioner admits that Bechtolsheim discloses "[a]t the same time that the playlist *is put together*, stream system 130 executes a process for guaranteeing a communication bandwidth for transmitting content data." Petition at 71 (emphasis added); Reader Declaration ¶ 97. This language is then repeated later in Dr. Reader's Declaration. *Id.* ¶ 289 ("The bandwidth requirements for each segment of content data thus are determined at the same time that the playlist *is prepared* by the steam [sic] system 130."). *Id.* ¶¶ 97, 289. The plain language of Petitioner's argument shows that the alleged bandwidth guarantee process of Bechtolsheim (which I do not concede exists) does not occur at a same time as transmission of play-list information, but rather, occurs (if at all), while the play-list information is being prepared. As such, Petitioner has failed to even plausibly allege that Bechtolsheim discloses this element.

120. Bechtolsheim also fails to disclose "a process for guaranteeing a communication bandwidth required for transmitting content as a process for establishing the connection" as recited in the Challenged Claims.[7] As discussed previously with respect to Petitioner's proffered motivations to combine, *see supra* Section V.B.3, Bechtolsheim does not teach a bandwidth "guarantee" process. Rather, Bechtolsheim teaches a mechanism whereby, rather than guaranteeing a

[7] As noted previously, contrary to Petitioner's argument, the SIP Standard also fails to tech this element. *See supra* Section V.A.7.

required bandwidth, it instead is "configured to issue warnings *and* drop data" "[i]f the target bandwidth is too small." Bechtolsheim (Ex 1006) ¶ 0038. This is directly in contrast to a bandwidth guarantee process—Bechtolsheim instead reduces the content being streamed (by selectively dropping certain data frames) exactly *because* it is unable to ensure a particular bandwidth will be sufficient.

121. Petitioner also cites to Bechtolsheim's disclosure that "[a] stream specifies the delivery endpoint for the content and represents the reservation of bandwidth and streaming capacity of the switch unit 135." Bechtolsheim ¶ 0049; *see* Reader Declaration ¶ 308. However, when viewed in its proper context in Bechtolsheim, it is obvious that this sentence does not refer to any process for "guaranteeing" a bandwidth, but rather, just indicates that information about available bandwidth (and streaming capacity) is *stored at* the switch unit 135. *See* Bechtolsheim ¶ 0049. This is consistent with other disclosures of Bechtolsheim that describe, consistent with Petitioner's cited portions, that Bechtolsheim can indicate, store, and transmit "bandwidth requirements," but it does not suggest that Bechtolsheim is executing any process for guaranteeing a particular bandwidth. Rather, the "metadata" of Bechtolsheim simply acts as storage for how much bandwidth a particular set of content will need—nothing guarantees that a receiver will have sufficient bandwidth to transmit/receive the content at that data rate.

6. Claim 12 Is Not Obvious in View of the Cited References

122. Claim 12 depends, directly, from claim 10 of the ’427 Patent. As discussed above, Petitioner has failed to submit adequate evidence showing a motivation to combine Ueda, the SIP Standard, and the SDP Standard, as proposed. *See supra* Sections V.A.4 and 5. Further, and as discussed above, even if the references are combined as proposed, this combination fails to disclose each and every element of claim 10 of the ’427 Patent. *See supra* Sections V.A.6 and 7.

123. As such, it is my opinion that Petitioner has failed to demonstrate that claims 4-9 are obvious in view of the cited references.

7. Claims 21 and 33 Are Not Obvious In View of the Cited References

124. Claims 21 and 33 are each in independent form and recite (discussed at *supra* Section V.A.9) at least one element that is not disclosed, taught, or suggested in the cited art relied upon by Petitioner. *See supra* Sections V.A.6 and 7.

125. These elements, repeated substantively identically in each of claims 21 and 33 differentiate each claim from the cited art, as discussed above with respect to claim 10. *See supra* Sections V.A.6 and 7. As such, it is my opinion that Petitioner has failed to show that the Challenged Claims are obvious.

C. Claims 11, 13, 19 and 23 Are Not Obvious in View of Ueda Combined with the SIP Standard, the SDP Standard, and Cohee (Ground 3)

126. In addition to the above, Petitioner also alleges that claims 11, 13, 19 and 23 are obvious in view of Ueda, combined with the SIP Standard, the SDP Standard, and U.S. Patent Application Publication No. 2010/0010884 ("Cohee"), Ex. 1007.

127. As discussed above, though, Petitioner has failed to put forth sufficient evidence of a motivation to combine Ueda with the SIP Standard and the SDP Standard. *See supra* Sections V.A.4 and 5. Even assuming that Petitioner has put forth sufficient motivation to combine these references, though, the references still fail to disclose each and every element of the claims. *See supra* Sections V.A.6, 7, and 9. Petitioner has failed to show that Cohee could be combined with any of the references.

1. Overview of Cohee

128. According to the specification of Cohee, it is directed to a "system and method for creating, storing, and serving a video ad in a smart media player that displays the ad in a standard Web browser." Cohee, Ex 1007, ¶ 0010. This process is outlined in Figure 4, reproduced below, whereby a publisher can "create, store, serve and play video ads." *Id.* ¶ 0037; Fig. 4.

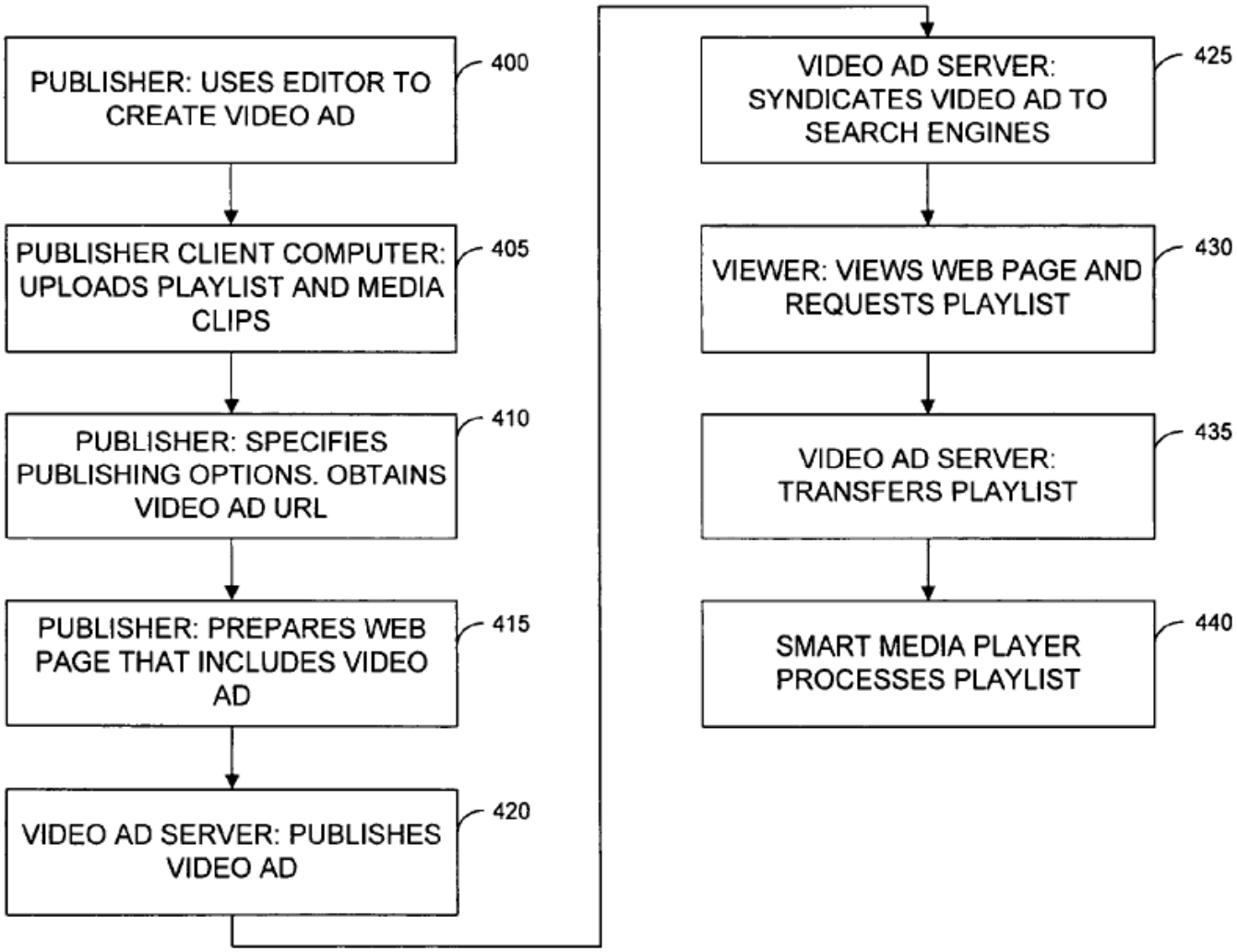

129. As shown in the above, Cohee contemplates the creation of an advertisement, at step 400, by a publisher. *Id.* ¶ 0053. After creation, at step 405, the publisher uploads a playlist and related media files corresponding to the ad to a video ad server 115. *Id.* Cohee also contemplates a system in which media clips are not uploaded directly to the video ad server, but rather, including in the playlist a "reference to each media clip" so that "a media clip [can] reside at any location on the Internet

accessible by a URL." *Id.* Once the ad playlist (and if included, media clips) are prepared, a Web page including the video ad can be created, at step 415. *Id.* ¶ 0056.

130. When a user/viewer visits that web page and requests that the video ad be played, at step 430, the Web browser can "execut[] an HTML request to download from video ad server 115 the playlist which corresponds to the desired video ad." *Id.* ¶ 0057. In response, "[A]t step 435,video ad server 115 transfers the playlist corresponding to the video ad to the Web browser," and finally, at step 440, the media player on the Web browser "processes sequentially each instruction in the playlist thereby playing the video ad." *Id.*

2. Motivation to Combine Ueda and the SIP Standard and the SDP Standard with Cohee

131. As with both the SIP Standard, the SDP Standard, and Bechtolsheim, Petitioner presents only a cursory justification for combining Cohee with Ueda, and notably, provides no explanation for why or how Cohee could be combined with the SIP Standard or the SDP Standard, as alleged. *See* Petition at 25 (describing *only* a motivation to combine Ueda with Cohee); Reader Declaration ¶ 113 (same).

132. But even Petitioner's argument to combine Cohee and Ueda is severely lacking. Relying on a single paragraph from its expert, Petitioner argues that a POSA would have been motivated to combine Cohee with Ueda "to make it possible for media clips to reside at any location, including a remote server on the internet."

Petition at 25; Reader Declaration ¶ 113. But Petitioner provides no reason why a POSA would desire such circumstances.

133. Ueda itself relies upon a disc that points to a single URL, *at the server*, to determine whether there exists new content to download in response to a user request. As noted previously, there are two circumstances, contemplated by Ueda, which can occur at the server in response to a user request:

- "[W]herein the server holds no new commercial content to be provided to the user, the processing is ended." Ueda ¶ 0230.
- "[W]herein the server holds a new commercial content to be provided to the user, in step S285 the server transmits the latest commercial content to the content providing device on the user side." *Id.*

134. Petitioner, and its expert, do not even attempt to reconcile this process of Ueda with Cohee, and gives no explanation for how or why a POSA would be motivated to significantly modify Ueda to incorporate such an unrelated feature. Petitioner attempts to circumvent this teaching of Ueda by stating that Cohee teaches "[b]ecause the playlist contains a reference to each media clip . . . it is possible for a media clip to reside at any location on the Internet accessible by a URL." Reader Declaration ¶ 113. But it is not clear how such a circumstance relates in any way to the system of Ueda, which contemplates a single URL that contains information on whether or not a sub content should be transmitted.

135. Petitioner's other proposed "motivations" are similarly unavailing. Petitioner alleges that a POSA would, alternatively, be motived to combine Ueda with Cohee in order to "reduc[e] dedication of end-user equipment local storage resources for storing main content and sub content, and reducing privacy risks for content providers that could occur by permitting local storage of content." Petition at 25; Reader Declaration ¶ 113. Petitioner's expert offers no further explanation or justification for this modification. *Id.*

136. Again, though, this argument about "end-user equipment local storage resources" and "permitting local storage of content" is *directly* contradictory with Ueda's express provisions for allocating such local storage resources for downloading both main and sub content to a "local storage unit 155" before playback, as shown in Figure 7, reproduced below.

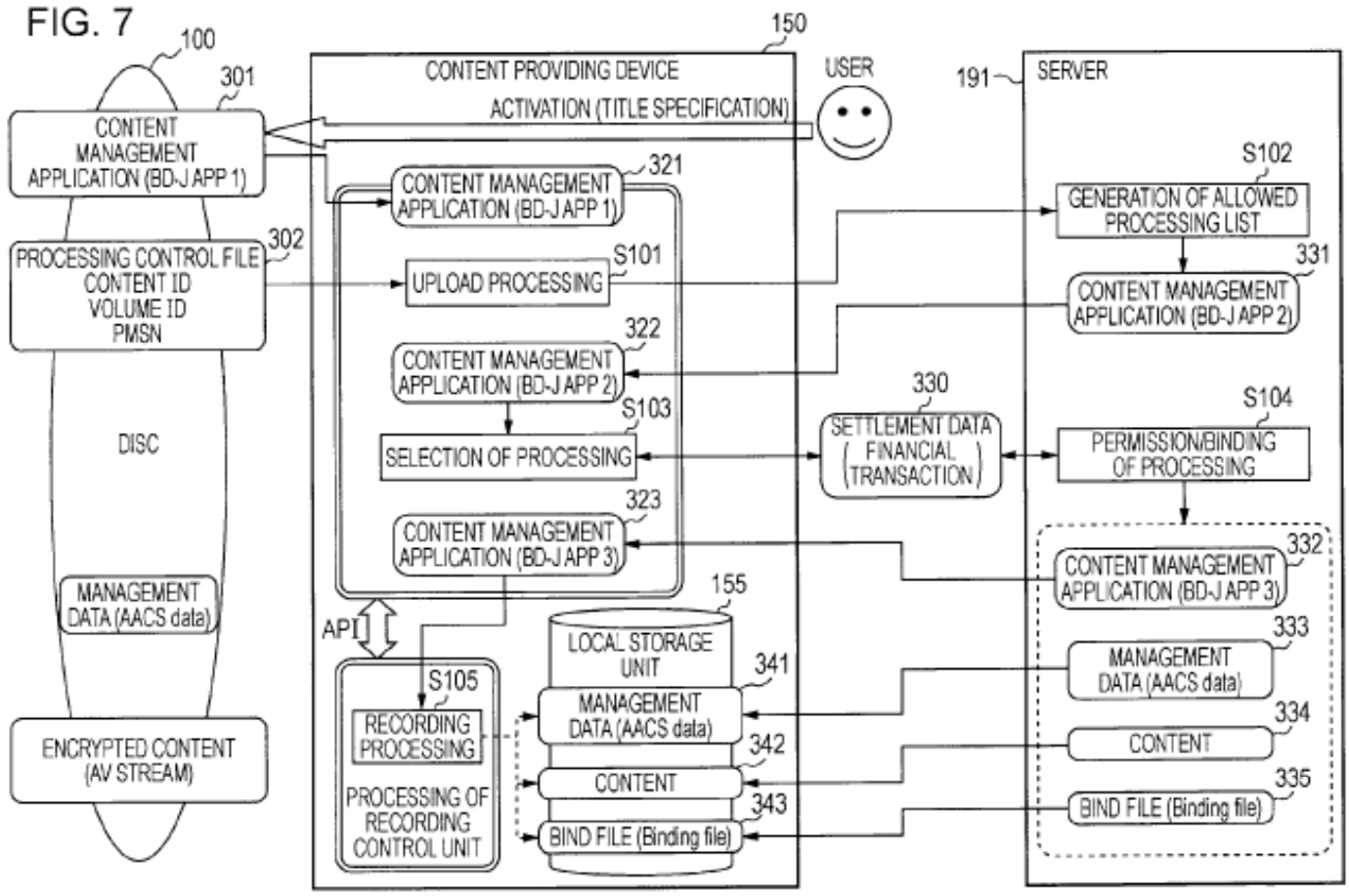

137. In fact, Ueda highlights that "[i]t is indispensable to obtain a content from the server *before* the content playback processing employing a disc stored content and a local storage unit stored content is performed." Ueda ¶ 0121 (emphasis added). Petitioner neither considers nor addresses why a POSA would be motivated to go against this explicit teaching of Ueda in order to, as Petitioner claims, "reduce dedication of end-user equipment local storage resources." Reader Declaration ¶ 113.

138. As such, Petitioner presents only a conclusory statement that a POSA would be motivated to combine these disparate references, which does not address the teaching within Ueda to the contrary.

3. Claims 11 and 13 Are Not Obvious in View of Ueda combined with the SIP Standard, the SDP Standard, and Cohee

139. Claims 11 and 13 depend, directly, from claim 10 of the ’427 Patent. As discussed above, Petitioner has failed to submit adequate evidence showing a motivation to combine Ueda, the SIP Standard, and the SDP Standard, as proposed. *See supra* Sections V.A.4 and 5. Further, and as discussed above, even if the references are combined as proposed, this combination fails to disclose each and every element of claim 10 of the ’427 Patent. *See supra* Sections V.A.6 and 7.

140. As such, it is my opinion that Petitioner has failed to demonstrate that claims 11 and 13 are obvious in view of the cited references.

4. Claims 19 and 23 Are Not Obvious in View of the Cited References

141. Claims 19 and 23 are both in independent form, but recite substantively similar features as claim 10. In particular, claims 19 and 23 both recite the feature of “at a same time that the one or more connection control servers executes a process for guaranteeing a communication bandwidth required for transmitting content data as a process for establishing the connection, receive the play-list information transmitted by the application server system.” This differs from claim 10 only in that this claim requires the third receiver to “receive the play-list information” as opposed

to "transmit" such information. The Petition still fails to disclose transmitting *or* receiving the play-list information as required by the claims. *See supra* Sections V.A.6 and 7.

D. Claims 11, 13, 19, and 23 Are Not Obvious in View of Ueda Combined with the SIP Standard, Bechtolsheim, and Cohee (Ground 4)

142. Though Petitioner combines Ground 4 into a single section along with Ground 3, Petitioner separately relies upon Cohee, in combination with Ueda, the SIP Standard, and Bechtolsheim

1. Motivation to Combine Ueda and the SIP Standard and Bechtolsheim with Cohee

143. Again, as above, Petitioner does not make any argument for combining Cohee with the SIP Standard or Bechtolsheim, only that Ueda and Cohee should be combined. As discussed above, though, Petitioner does not provide sufficient motivation to combine Ueda with Cohee. *See supra* Section V.C.2. As Petitioner provides no additional reasoning to combine Cohee with Bechtolsheim, its argument for Ground 4 also fails.

2. Claims 11 and 13 Are Not Obvious In View of the Cited References

144. As discussed above, even if Ueda is combined with Cohee, it still fails to disclose essential elements of claims 11 and 13 (as alleged by the Petitioner). *See supra* Section V.C.3. Petitioner provides no explanation or reasoning by which

Bechtolsheim would solve the deficiencies of Cohee. As such, Petitioner's Ground 4 also fails.

3. Claims 19 and 23 Are Not Obvious In View of the Cited References

145. As discussed above, Petitioner has failed to show that the elements of claims 19 and 23 are disclosed by the cited references. *See supra* Section V.C.4. Petitioner does not allege that Bechtolsheim alleges these deficiencies. As such, Petitioner's Ground 4 must fail.

VI. RIGHT TO SUPPLEMENT

146. My opinions relating to the validity of the Challenged Claims of the '427 Patent are addressed in this declaration. This declaration is based on the information presently available to me. To the extent any additional information is provided at a later time, I reserve the right to amend or supplement this declaration based on that information.

147. I reserve the right to supplement my opinions in light of any responsive opinions or critique from or on behalf of Petitioner.

148. I reserve the right to augment or modify these opinions if additional information becomes available, in response to potential institution by the Board, and/or in rebuttal to positions taken by Petitioner.

VII. CONCLUSION

149. For the reasons set forth herein, I am of the opinion that all of the Challenged Claims are not unpatentable.

I hereby declare under penalty of perjury under the laws of the United States of America that all statements made herein of my own knowledge are true and that all statements made on information and belief are believed to be true, and further, that these statements are made with the knowledge that willful false statements and the like so made are punishable by fine, imprisonment, or both, under 18 U.S.C. § 1001. I attest to having a final and complete copy of this declaration before me at the time I add my signature.

Jeremy R. Cooperstock

Nov. 7, 2023
Date