Trials@uspto.gov
Tel: 571-272-7822

Paper 10
Entered: May 18, 2023

UNITED STATES PATENT AND TRADEMARK OFFICE

BEFORE THE PATENT TRIAL AND APPEAL BOARD

SONY GROUP CORPORATION,
Petitioner,

v.

GREENTHREAD LLC
Patent Owner.

IPR2023-00324 (Patent No. 11,121,222 B2)
IPR2023-00325 (Patent No. 11,316,014 B2)
IPR2023-00375 (Patent No. 10,734,481 B2)
IPR2023-00376 (Patent No. 10,510,842 B2)[1]

Before GRACE KARAFFA OBERMANN, CHRISTOPHER L. CRUMBLEY, and CHRISTOPHER M. KAISER, *Administrative Patent Judges.*

Per Curiam.

DECISION
Settlement Prior to Institution of Trial
37 C.F.R. § 42.74

---

[1] This Order addresses issues that are the same in the above-captioned proceedings. The parties are not authorized to use a multi-case caption.

I. INTRODUCTION

On May 3, 2023, after email authorization by the Board, Petitioner and Patent Owner (collectively "the Parties") filed a Joint Motion to Terminate *Inter Partes* Review in the above-identified proceeding. Paper 8 ("Joint Motion").[2] In support of the Joint Motion, the Parties filed copies of Confidential Settlement-Related Agreements (Exs. 2001, 2002 ("Settlement Agreements")), as well as a Joint Request that Agreements be Treated as Business Confidential Information and be Kept Separate Pursuant to 35 U.S.C. § 317(b) and 37 C.F.R. § 42.74 (Paper 9 ("Joint Request")).

II. DISCUSSION

In the Joint Motion, "[t]he Parties jointly request that the Board terminate this *inter partes* review in its entirety." Paper 8, 2. The Parties represent that the filed Settlement Agreements are true copies and "together form the complete agreement resolving the disputes in the *inter partes* review between the Parties" and that "[t]here are no other collateral agreements between the Parties made in connection with, or in contemplation of, the termination sought." *Id.* at 1. The Parties further represent that the District Court proceedings between the Parties involving the above-identified patent at issue was dismissed on April 27, 2023. *Id.* at 2.

The Parties also filed a Joint Request that the Settlement Agreements be treated as business confidential information and be kept separate from the

---

[2] For purposes of expediency, we cite to papers and exhibits filed in IPR2023-00324, unless otherwise noted. The Parties filed similar papers and exhibits in each of the above-identified proceedings.

file of the patent involved in this *inter partes* proceeding. Paper 9, 1. As the filing party for confidential Exhibit 2001, Patent Owner represents that it "is not permitted to share certain portions . . . with any party other than the Board and its staff." Paper 8, 1. Patent Owner further represents that "Exhibit 2001, to which Sony is not a party, is to be filed such that it is available to the Board and Patent Owner only" and that "the Parties are in agreement with this procedure." *Id.*

This proceeding is in its preliminary phase. Petitioner filed its Petition on December 12, 2022, and Patent Owner has not filed a Preliminary Response, which was due May 12, 2023. Paper 5, 1; Ex. 3002, 1. Accordingly, we have not yet entered a decision on institution. In view of the early stage of the proceeding and the settlement between the Parties, we determine that good cause exists to terminate the proceeding with respect to the Parties.

After reviewing each of the Settlement Agreements, we find that the Settlement Agreements contain confidential business information regarding the terms of settlement. We determine that good cause exists to treat the Settlement Agreements as business confidential information pursuant to 35 U.S.C. § 317(b) and 37 C.F.R. § 42.74(c) and kept separate from the files of the challenged patent.

The Parties further request that "the Board inform them if anyone seeks production of the agreements and afford them an opportunity to address whether such request is supported by good cause." Paper 9, 1. We have no such procedure to serve upon the Parties a request for access to the Settlement Agreements, and, further, our regulations do not require us to do

so. Therefore, we decline to issue an order regarding any request for access to the Settlement Agreements.

This Order does not constitute a final written decision pursuant to 35 U.S.C. § 318(a).

Accordingly, for the reasons discussed above, it is:

III. ORDER

ORDERED that the Joint Motion to Terminate is *granted*;

FURTHER ORDERED that the Joint Request that Agreements be Treated as Business Confidential Information and be Kept Separate Pursuant to 35 U.S.C. § 317(b) and 37 C.F.R. § 42.74 is *granted*,

FURTHER ORDERED that Exhibits 2001 and 2002 shall remain business confidential information, and

FURTHER ORDERED that the Petition is *dismissed.*

IPR2023-00324 (Patent No. 11,121,222 B2)
IPR2023-00325 (Patent No. 11,316,014 B2)
IPR2023-00375 (Patent No. 10,734,481 B2)
IPR2023-00376 (Patent No. 10,510,842 B2)

For PETITIONER:

Matthew A. Smith
Andrew S. Baluch
SMITH BALUCH LLP
smith@smithbaluch.com
baluch@smithbaluch.com

For PATENT OWNER:

Alan Whitehurst
Nicholas T. Matich
Arvind Jairam
Stuart McCommas
Archis "Neil" Ozarka
MCKOOL SMITH, P.C.
awhitehurst@mckoolsmith.com
nmatich@mckoolsmith.com
ajairam@mckoolsmith.com
smccommas@mckoolsmith.com
nozarkar@mckoolsmith.com

Trials@uspto.gov
Tel: 571-272-7822

Paper 11
Date: May 17, 2023

UNITED STATES PATENT AND TRADEMARK OFFICE

BEFORE THE PATENT TRIAL AND APPEAL BOARD

DELL TECHNOLOGIES INC. AND DELL INC.,
Petitioner,

v.

GREENTHREAD LLC,
Patent Owner.

IPR2023-00506 (Patent No. 10,510,842 B2)
IPR2023-00507 (Patent No. 10,734,481 B2)
IPR2023-00509 (Patent No. 11,121,222 B2)
IPR2023-00510 (Patent No. 11,316,014 B2)[1]

Before CHRISTOPHER L. CRUMBLEY, CHRISTOPHER M. KAISER, and KRISTI L. R. SAWERT, *Administrative Patent Judges*.

Per Curiam.

DECISION
Settlement Prior to Institution of Trial
37 C.F.R. § 42.74

---

[1] This Order addresses issues that are the same in the above-captioned proceedings. The parties are not authorized to use a multi-case caption.

I. INTRODUCTION

On May 2, 2023, after email authorization by the Board, Petitioner and Patent Owner (collectively "the Parties") filed a Joint Motion to Terminate *Inter Partes* Review in the above-identified proceeding. Paper 9 ("Joint Motion").[2] In support of the Joint Motion, the Parties filed copies of Confidential Settlement-Related Agreements (Exs. 2001, 2002 ("Settlement Agreements")), as well as a Joint Request to Keep Separate Pursuant to 35 U.S.C. § 317(b) and 37 C.F.R. § 42.74(c) (Paper 10 ("Joint Request")).

II. DISCUSSION

In the Joint Motion, "[t]he Parties jointly request that the Board terminate this *inter partes* review of the Patent-in-Suit, Case No. IPR2023-00506, in its entirety." Paper 9, 2. The Parties represent that the filed Settlement Agreements are true copies and "together form the complete agreement resolving the disputes in the *inter partes* review between the Parties" and that "[t]here are no other collateral agreements between the Parties made in connection with, or in contemplation of, the termination sought." *Id.* at 1. The Parties further represent that a "joint motion to dismiss the lawsuit between" the Parties "involving the Patent-in-Suit was filed on April 24, 2023." *Id.* at 2.

The Parties also filed a Joint Request that the Settlement Agreements be treated as business confidential information and be kept separate from the file of the patent involved in this *inter partes* proceeding and the files of this

---

[2] For purposes of expediency, we cite to papers and exhibits filed in IPR2023-00506, unless otherwise noted. The Parties filed similar papers and exhibits in each of the above-identified proceedings.

proceeding. Paper 10, 1. As the filing party for confidential Exhibit 2001, Patent Owner represents that it "is not permitted to share certain portions . . . with any party other than the Board and its staff." Paper 9, 1. Patent Owner further represents that "Exhibit 2001, to which Dell is not a party, is to be filed such that it is available to the Board and Patent Owner only" and that "the Parties are in agreement with this procedure." *Id.*

This proceeding is in its preliminary phase. Petitioner filed its Petition on January 27, 2022, and Patent Owner has not filed a Preliminary Response. Paper 9, 2. Accordingly, we have not yet entered a decision on institution. In view of the early stage of the proceeding and the settlement between the Parties, we determine that good cause exists to terminate the proceeding with respect to the Parties.

After reviewing each of the Settlement Agreements, we find that the Settlement Agreements contain confidential business information regarding the terms of settlement. We determine that good cause exists to treat the Settlement Agreements as business confidential information pursuant to 35 U.S.C. § 317(b) and 37 C.F.R. § 42.74(c) and kept separate from the files of the challenged patent. On the other hand, as to the Parties' request that the Board keep the Settlement Agreements "separate from the files of this proceeding," Paper 10, 1, our regulations do not require us to do so. Therefore, we decline to issue an order to keep the Settlement Agreements separate from the file of this *inter partes* proceeding.

The Parties further request that "the Board inform them if anyone seeks production of the agreements and afford them an opportunity to address whether such request is supported by good cause." Paper 10, 1. We

have no such procedure to serve upon the Parties a request for access to the Settlement Agreements, and, further, our regulations do not require us to do so. Therefore, we decline to issue an order regarding any request for access to the Settlement Agreements.

This Order does not constitute a final written decision pursuant to 35 U.S.C. § 318(a).

Accordingly, for the reasons discussed above, it is:

III. ORDER

ORDERED that the Joint Motion to Terminate is *granted*;

FURTHER ORDERED that the Joint Request to Keep Separate Pursuant to 35 U.S.C. § 317(b) and 37 C.F.R. § 42.74(c) is *granted-in-part* and *denied-in-part*,

FURTHER ORDERED that Exhibits 2001 and 2002 shall remain business confidential information, and

FURTHER ORDERED that the Petition is *dismissed*.

IPR2023-00506 (Patent No. 10,510,842 B2)
IPR2023-00507 (Patent No. 10,734,481 B2)
IPR2023-00509 (Patent No. 11,121,222 B2)
IPR2023-00510 (Patent No. 11,316,014 B2)

FOR PETITIONER:

Christopher TL Douglas
Lauren N. Griffin
ALSTON & BIRD LLP
christopher.douglas@alston.com
lauren.griffin@alston.com

FOR PATENT OWNER:

Alan Whitehurst
Arvind Jairam
Archis Ozarkar
Nicholas Matich
Stuart McCommas
MCKOOL SMITH, P.C.
awhitehurst@mckoolsmith.com
ajairam@mckoolsmith.com
nozarkar@mckoolsmith.com
nmatich@mckoolsmith.com
smccommas@mckoolsmith.com

AO 120 (Rev. 08/10)

TO: Mail Stop 8 Director of the U.S. Patent and Trademark Office P.O. Box 1450 Alexandria, VA 22313-1450	REPORT ON THE FILING OR DETERMINATION OF AN ACTION REGARDING A PATENT OR TRADEMARK

In Compliance with 35 U.S.C. § 290 and/or 15 U.S.C. § 1116 you are hereby advised that a court action has been filed in the U.S. District Court Western District of Texas, Waco Division on the following

☐ Trademarks or ☑ Patents. (☐ the patent action involves 35 U.S.C. § 292.):

DOCKET NO.	DATE FILED	U.S. DISTRICT COURT
6:22-cv-00105	1/27/2022	Western District of Texas, Waco Division

PLAINTIFF	DEFENDANT
GREENTHREAD, LLC	INTEL CORPORATION, DELL INC., AND DELL TECHNOLOGIES INC.,

	PATENT OR TRADEMARK NO.	DATE OF PATENT OR TRADEMARK	HOLDER OF PATENT OR TRADEMARK
1	8,421,195	4/16/2013	GREENTHREAD, LLC
2	9,190,502	11/17/2015	GREENTHREAD, LLC
3	10,510,842	12/17/2019	GREENTHREAD, LLC
4	10,734,481	8/4/2020	GREENTHREAD, LLC
5	11,121,222	9/14/2021	GREENTHREAD, LLC

In the above---entitled case, the following patent(s)/ trademark(s) have been included:

DATE INCLUDED	INCLUDED BY ☑ Amendment ☐ Answer ☐ Cross Bill ☐ Other Pleading	
PATENT OR TRADEMARK NO.	DATE OF PATENT OR TRADEMARK	HOLDER OF PATENT OR TRADEMARK
1 11,316,014	4/26/2022	GREENTHREAD, LLC
2		
3		
4		
5		

In the above---entitled case, the following decision has been rendered or judgement issued:

DECISION/JUDGEMENT

CLERK	(BY) DEPUTY CLERK	DATE

Copy 1---Upon initiation of action, mail this copy to Director Copy 3---Upon termination of action, mail this copy to Director
Copy 2---Upon filing document adding patent(s), mail this copy to Director Copy 4---Case file copy

AO 120 (Rev. 08/10)

TO: Mail Stop 8 Director of the U.S. Patent and Trademark Office P.O. Box 1450 Alexandria, VA 22313-1450	REPORT ON THE FILING OR DETERMINATION OF AN ACTION REGARDING A PATENT OR TRADEMARK

In Compliance with 35 U.S.C. § 290 and/or 15 U.S.C. § 1116 you are hereby advised that a court action has been filed in the U.S. District Court Western District of Texas, Waco Division on the following

☐ Trademarks or ☑ Patents. (☐ the patent action involves 35 U.S.C. § 292.):

DOCKET NO.	DATE FILED	U.S. DISTRICT COURT
6:22-cv-00105	1/27/2022	Western District of Texas, Waco Division

PLAINTIFF	DEFENDANT
GREENTHREAD, LLC	INTEL CORPORATION, DELL INC., AND DELL TECHNOLOGIES INC.,

	PATENT OR TRADEMARK NO.	DATE OF PATENT OR TRADEMARK	HOLDER OF PATENT OR TRADEMARK
1	8,421,195	4/16/2013	GREENTHREAD, LLC
2	9,190,502	11/17/2015	GREENTHREAD, LLC
3	10,510,842	12/17/2019	GREENTHREAD, LLC
4	10,734,481	8/4/2020	GREENTHREAD, LLC
5	11,121,222	9/14/2021	GREENTHREAD, LLC

In the above---entitled case, the following patent(s)/ trademark(s) have been included:

DATE INCLUDED	INCLUDED BY ☐ Amendment ☐ Answer ☐ Cross Bill ☐ Other Pleading	
PATENT OR TRADEMARK NO.	DATE OF PATENT OR TRADEMARK	HOLDER OF PATENT OR TRADEMARK
1		
2		
3		
4		
5		

In the above---entitled case, the following decision has been rendered or judgement issued:

DECISION/JUDGEMENT

CLERK	(BY) DEPUTY CLERK	DATE

Copy 1---Upon initiation of action, mail this copy to Director Copy 3---Upon termination of action, mail this copy to Director
Copy 2---Upon filing document adding patent(s), mail this copy to Director Copy 4---Case file copy

UNITED STATES PATENT AND TRADEMARK OFFICE

UNITED STATES DEPARTMENT OF COMMERCE
United States Patent and Trademark Office
Address: COMMISSIONER FOR PATENTS
P.O. Box 1450
Alexandria, Virginia 22313-1450
www.uspto.gov

APPLICATION NUMBER	FILING OR 371(C) DATE	FIRST NAMED APPLICANT	ATTY. DOCKET NO./TITLE
15/590,282	05/09/2017	G.R. MOHAN RAO	GRTD.01.01.DV5

CONFIRMATION NO. 1032

POWER OF ATTORNEY NOTICE

40672
LAW OFFICE OF BILL NAIFEH
PO BOX 803423
DALLAS, TX 75380

OC000000129112465

Date Mailed: 10/15/2021

NOTICE REGARDING CHANGE OF POWER OF ATTORNEY

This is in response to the Power of Attorney filed 10/07/2021.

- The Power of Attorney to you in this application has been revoked by the applicant. Future correspondence will be mailed to the new address of record(37 CFR 1.33).

Questions about the contents of this notice and the requirements it sets forth should be directed to the Office of Data Management, Application Assistance Unit, at **(571) 272-4000** or **(571) 272-4200** or **1-888-786-0101**.

/ytdemisse/

UNITED STATES PATENT AND TRADEMARK OFFICE

UNITED STATES DEPARTMENT OF COMMERCE
United States Patent and Trademark Office
Address: COMMISSIONER FOR PATENTS
P.O. Box 1450
Alexandria, Virginia 22313-1450
www.uspto.gov

APPLICATION NUMBER	FILING OR 371(C) DATE	FIRST NAMED APPLICANT	ATTY. DOCKET NO./TITLE
15/590,282	05/09/2017	G.R. MOHAN RAO	GRTD60-33439

CONFIRMATION NO. 1032

POA ACCEPTANCE LETTER

25883
MUNCK WILSON MANDALA L.L.P
P.O. Drawer 800889
DALLAS, TX 75380

OC000000129112486

Date Mailed: 10/15/2021

NOTICE OF ACCEPTANCE OF POWER OF ATTORNEY

This is in response to the Power of Attorney filed 10/07/2021.

The Power of Attorney in this application is accepted. Correspondence in this application will be mailed to the above address as provided by 37 CFR 1.33.

Questions about the contents of this notice and the requirements it sets forth should be directed to the Office of Data Management, Application Assistance Unit, at **(571) 272-4000** or **(571) 272-4200** or **1-888-786-0101**.

/ytdemisse/

Greenthread Ex. 2069, p. 14 of 199
Semiconductor v. Greenthread
IPR2023-01242

PTO/AIA/81A (02-15)
Approved for use through 03/31/2021. OMB 0651-0035
U.S. Patent and Trademark Office, U.S. DEPARTMENT OF COMMERCE
Under the Paperwork Reduction Act of 1995 no persons are required to respond to a collection of information unless it displays a valid OMB control number

PATENT - POWER OF ATTORNEY OR REVOCATION OF POWER OF ATTORNEY WITH A NEW POWER OF ATTORNEY AND CHANGE OF CORRESPONDENCE ADDRESS

Patent Number	10,510,842
Issue Date	12-17-2019
First Named Inventor	G.R. Mohan RAO
Title	SEMICONDUCTOR DEVICES WITH GRADED DOPANT REGIONS
Attorney Docket No.	GRTD60-33439

I hereby revoke all previous powers of attorney given in the above-identified patent.

○ A Power of Attorney is submitted herewith.

OR

◉ I hereby appoint Practitioner(s) associated with the Customer Number identified in the box at right as my/our attorney(s) or agent(s) with respect to the patent identified above, and to transact all business in the United States Patent and Trademark Office connected therewith: **25883**

OR

○ I hereby appoint Practitioner(s) named below as my/our attorney(s) or agent(s) with respect to the patent identified above, and to transact all business in the United States Patent and Trademark Office connected therewith:

Practitioner(s) Name	Registration Number

Please recognize or change the correspondence address for the above-identified patent to:

○ The address associated with the above-identified Customer Number.

OR

◉ The address associated with the Customer Number identified in the box at right: **25883**

OR

○ Firm or Individual Name					
Address					
City		State		Zip	
Country					
Telephone		Email			

I am the:

☐ Applicant.

OR

☒ Patent owner.

Statement under 37 CFR 3.73(c) (Form PTO/AIA/96) submitted herewith or filed on _____.

SIGNATURE of Applicant or Patent Owner

Signature	[signature]	Date	9/30/2021
Name	Phillip John	Telephone	281-788-8294
Title and Company	Manager	Greenthread, LLC	

NOTE: Signatures of all the applicants or patent owners of the entire interest or their representative(s) are required. If more than one signature is required, submit multiple forms, check the box below, and identify the total number of forms submitted in the blank below.

☐ A total of _____ forms are submitted.

This collection of information is required by 37 CFR 1.31, 1.32, and 1.33. The information is required to obtain or retain a benefit by the public, which is to update (and by the USPTO to process) the file of a patent or reexamination proceeding. Confidentiality is governed by 35 U.S.C. 122 and 37 CFR 1.14. This collection is estimated to take 3 minutes to complete, including gathering, preparing, and submitting the completed application form to the USPTO. Time will vary depending upon the individual case. Any comments on the amount of time you require to complete this form and/or suggestions for reducing this burden, should be sent to the Chief Information Officer, U.S. Patent and Trademark Office, U.S. Department of Commerce, P.O. Box 1450, Alexandria, VA 22313-1450. DO NOT SEND FEES OR COMPLETED FORMS TO THIS ADDRESS. **SEND TO: Commissioner for Patents, P.O. Box 1450, Alexandria, VA 22313-1450.**

If you need assistance in completing the form, call 1-800-PTO-9199 and select option 2.

Electronic Acknowledgement Receipt

EFS ID:	43954846
Application Number:	15590282
International Application Number:	
Confirmation Number:	1032
Title of Invention:	SEMICONDUCTOR DEVICES WITH GRADED DOPANT REGIONS
First Named Inventor/Applicant Name:	G.R. MOHAN RAO
Customer Number:	40672
Filer:	Gregory Michael Howison
Filer Authorized By:	
Attorney Docket Number:	GRTD.01.01.DV5
Receipt Date:	07-OCT-2021
Filing Date:	09-MAY-2017
Time Stamp:	11:45:02
Application Type:	Utility under 35 USC 111(a)

Payment information:

Submitted with Payment	no

File Listing:

Document Number	Document Description	File Name	File Size(Bytes)/ Message Digest	Multi Part /.zip	Pages (if appl.)
1	Assignee showing of ownership per 37 CFR 3.73	GRT33439373STMT.pdf	120467 29fdf96e90cb10f99a7dc8741b813fcc187dbfea	no	3

Warnings:

Information:					
2	Power of Attorney	GRT33439POACHANGEADDRESSEXE.pdf	1018436 02fb36f373996b50d97938688fbb562bfa9203d6	no	1
Warnings:					
Information:					
			Total Files Size (in bytes):	1138903	

This Acknowledgement Receipt evidences receipt on the noted date by the USPTO of the indicated documents, characterized by the applicant, and including page counts, where applicable. It serves as evidence of receipt similar to a Post Card, as described in MPEP 503.

New Applications Under 35 U.S.C. 111
If a new application is being filed and the application includes the necessary components for a filing date (see 37 CFR 1.53(b)-(d) and MPEP 506), a Filing Receipt (37 CFR 1.54) will be issued in due course and the date shown on this Acknowledgement Receipt will establish the filing date of the application.
National Stage of an International Application under 35 U.S.C. 371
If a timely submission to enter the national stage of an international application is compliant with the conditions of 35 U.S.C. 371 and other applicable requirements a Form PCT/DO/EO/903 indicating acceptance of the application as a national stage submission under 35 U.S.C. 371 will be issued in addition to the Filing Receipt, in due course.
New International Application Filed with the USPTO as a Receiving Office
If a new international application is being filed and the international application includes the necessary components for an international filing date (see PCT Article 11 and MPEP 1810), a Notification of the International Application Number and of the International Filing Date (Form PCT/RO/105) will be issued in due course, subject to prescriptions concerning national security, and the date shown on this Acknowledgement Receipt will establish the international filing date of the application.

Under the Paperwork Reduction Act of 1995, no persons are required to respond to a collection of information unless it displays a valid OMB control number.

STATEMENT UNDER 37 CFR 3.73(c)

Applicant/Patent Owner: Greenthread, LLC

Application No./Patent No.: 10,510,842 Filed/Issue Date: 12-17-2019

Titled: SEMICONDUCTOR DEVICES WITH GRADED DOPANT REGIONS

Greenthread, LLC, a Limited Liability Company

(Name of Assignee) (Type of Assignee, e.g., corporation, partnership, university, government agency, etc.)

states that, for the patent application/patent identified above, it is (choose **one** of options 1, 2, 3 or 4 below):

1. [x] The assignee of the entire right, title, and interest.

2. [ ] An assignee of less than the entire right, title, and interest (check applicable box):

   [ ] The extent (by percentage) of its ownership interest is _____%. Additional Statement(s) by the owners holding the balance of the interest must be submitted to account for 100% of the ownership interest.

   [ ] There are unspecified percentages of ownership. The other parties, including inventors, who together own the entire right, title and interest are:

   Additional Statement(s) by the owner(s) holding the balance of the interest must be submitted to account for the entire right, title, and interest.

3. [ ] The assignee of an undivided interest in the entirety (a complete assignment from one of the joint inventors was made). The other parties, including inventors, who together own the entire right, title, and interest are:

   Additional Statement(s) by the owner(s) holding the balance of the interest must be submitted to account for the entire right, title, and interest.

4. [ ] The recipient, via a court proceeding or the like (*e.g.*, bankruptcy, probate), of an undivided interest in the entirety (a complete transfer of ownership interest was made). The certified document(s) showing the transfer is attached.

The interest identified in option 1, 2 or 3 above (not option 4) is evidenced by either (choose **one** of options A or B below):

A. [✓] An assignment from the inventor(s) of the patent application/patent identified above. The assignment was recorded in the United States Patent and Trademark Office at Reel 043783, Frame 0629, or for which a copy thereof is attached.

B. [ ] A chain of title from the inventor(s), of the patent application/patent identified above, to the current assignee as follows:

1. From: _____ To: _____

   The document was recorded in the United States Patent and Trademark Office at

   Reel _____, Frame _____, or for which a copy thereof is attached.

2. From: _____ To: _____

   The document was recorded in the United States Patent and Trademark Office at

   Reel _____, Frame _____, or for which a copy thereof is attached.

This collection of information is required by 37 CFR 3.73(b). The information is required to obtain or retain a benefit by the public which is to file (and by the USPTO to process) an application. Confidentiality is governed by 35 U.S.C. 122 and 37 CFR 1.11 and 1.14. This collection is estimated to take 12 minutes to complete, including gathering, preparing, and submitting the completed application form to the USPTO. Time will vary depending upon the individual case. Any comments on the amount of time you require to complete this form and/or suggestions for reducing this burden, should be sent to the Chief Information Officer, U.S. Patent and Trademark Office, U.S. Department of Commerce, P.O. Box 1450, Alexandria, VA 22313-1450. DO NOT SEND FEES OR COMPLETED FORMS TO THIS ADDRESS. **SEND TO: Commissioner for Patents, P.O. Box 1450, Alexandria, VA 22313-1450.**

If you need assistance in completing the form, call 1-800-PTO-9199 and select option 2.

Under the Paperwork Reduction Act of 1995, no persons are required to respond to a collection of information unless it displays a valid OMB control number.

STATEMENT UNDER 37 CFR 3.73(c)

3. From: _____ To: _____

The document was recorded in the United States Patent and Trademark Office at

Reel _____, Frame _____, or for which a copy thereof is attached.

4. From: _____ To: _____

The document was recorded in the United States Patent and Trademark Office at

Reel _____, Frame _____, or for which a copy thereof is attached.

5. From: _____ To: _____

The document was recorded in the United States Patent and Trademark Office at

Reel _____, Frame _____, or for which a copy thereof is attached.

6. From: _____ To: _____

The document was recorded in the United States Patent and Trademark Office at

Reel _____, Frame _____, or for which a copy thereof is attached.

☐ Additional documents in the chain of title are listed on a supplemental sheet(s).

☑ As required by 37 CFR 3.73(c)(1)(i), the documentary evidence of the chain of title from the original owner to the assignee was, or concurrently is being, submitted for recordation pursuant to 37 CFR 3.11.

[NOTE: A separate copy (i.e., a true copy of the original assignment document(s)) must be submitted to Assignment Division in accordance with 37 CFR Part 3, to record the assignment in the records of the USPTO. See MPEP 302.08]

The undersigned (whose title is supplied below) is authorized to act on behalf of the assignee.

/Gregory M. Howison, Reg. #30646/	October 5, 2021
Signature	Date
Gregory M. Howison	30,646
Printed or Typed Name	Title or Registration Number

Privacy Act Statement

The **Privacy Act of 1974 (P.L. 93-579)** requires that you be given certain information in connection with your submission of the attached form related to a patent application or patent. Accordingly, pursuant to the requirements of the Act, please be advised that: (1) the general authority for the collection of this information is 35 U.S.C. 2(b)(2); (2) furnishing of the information solicited is voluntary; and (3) the principal purpose for which the information is used by the U.S. Patent and Trademark Office is to process and/or examine your submission related to a patent application or patent. If you do not furnish the requested information, the U.S. Patent and Trademark Office may not be able to process and/or examine your submission, which may result in termination of proceedings or abandonment of the application or expiration of the patent.

The information provided by you in this form will be subject to the following routine uses:

1. The information on this form will be treated confidentially to the extent allowed under the Freedom of Information Act (5 U.S.C. 552) and the Privacy Act (5 U.S.C 552a). Records from this system of records may be disclosed to the Department of Justice to determine whether disclosure of these records is required by the Freedom of Information Act.
2. A record from this system of records may be disclosed, as a routine use, in the course of presenting evidence to a court, magistrate, or administrative tribunal, including disclosures to opposing counsel in the course of settlement negotiations.
3. A record in this system of records may be disclosed, as a routine use, to a Member of Congress submitting a request involving an individual, to whom the record pertains, when the individual has requested assistance from the Member with respect to the subject matter of the record.
4. A record in this system of records may be disclosed, as a routine use, to a contractor of the Agency having need for the information in order to perform a contract. Recipients of information shall be required to comply with the requirements of the Privacy Act of 1974, as amended, pursuant to 5 U.S.C. 552a(m).
5. A record related to an International Application filed under the Patent Cooperation Treaty in this system of records may be disclosed, as a routine use, to the International Bureau of the World Intellectual Property Organization, pursuant to the Patent Cooperation Treaty.
6. A record in this system of records may be disclosed, as a routine use, to another federal agency for purposes of National Security review (35 U.S.C. 181) and for review pursuant to the Atomic Energy Act (42 U.S.C. 218(c)).
7. A record from this system of records may be disclosed, as a routine use, to the Administrator, General Services, or his/her designee, during an inspection of records conducted by GSA as part of that agency's responsibility to recommend improvements in records management practices and programs, under authority of 44 U.S.C. 2904 and 2906. Such disclosure shall be made in accordance with the GSA regulations governing inspection of records for this purpose, and any other relevant (*i.e.*, GSA or Commerce) directive. Such disclosure shall not be used to make determinations about individuals.
8. A record from this system of records may be disclosed, as a routine use, to the public after either publication of the application pursuant to 35 U.S.C. 122(b) or issuance of a patent pursuant to 35 U.S.C. 151. Further, a record may be disclosed, subject to the limitations of 37 CFR 1.14, as a routine use, to the public if the record was filed in an application which became abandoned or in which the proceedings were terminated and which application is referenced by either a published application, an application open to public inspection or an issued patent.
9. A record from this system of records may be disclosed, as a routine use, to a Federal, State, or local law enforcement agency, if the USPTO becomes aware of a violation or potential violation of law or regulation.

UNITED STATES PATENT AND TRADEMARK OFFICE

UNITED STATES DEPARTMENT OF COMMERCE
United States Patent and Trademark Office
Address: COMMISSIONER FOR PATENTS
P.O. Box 1450
Alexandria, Virginia 22313-1450
www.uspto.gov

APPLICATION NUMBER	FILING OR 371(C) DATE	FIRST NAMED APPLICANT	ATTY.DOCKET NO./TITLE	REQUEST ID
15/590,282	05/09/2017	GREENTHREAD, LLC	GRTD.01.01.DV5	121971

Acknowledgement of Loss of Entitlement to Entity Status Discount

The entity status change request below filed through Private PAIR on 09/28/2020 has been accepted.

CERTIFICATIONS:

Change of Entity Status:

X Applicant changing to regular undiscounted fee status.
NOTE: Checking this box will be taken to be notification of loss of entitlement to small or micro entity status, as applicable.

This portion must be completed by the signatory or signatories making the entity status change in accordance with 37 CFR 1.4(d)(4).

Signature:	/Bill R. Naifeh, Reg. No. 44962/
Name:	Bill R. Naifeh
Registration Number:	44962

UNITED STATES PATENT AND TRADEMARK OFFICE

UNITED STATES DEPARTMENT OF COMMERCE
United States Patent and Trademark Office
Address: COMMISSIONER FOR PATENTS
P.O. Box 1450
Alexandria, Virginia 22313-1450
www.uspto.gov

APPLICATION NUMBER	FILING OR 371(C) DATE	FIRST NAMED APPLICANT	ATTY. DOCKET NO./TITLE
15/590,282	05/09/2017	G.R. MOHAN RAO	GRTD60-33439

CONFIRMATION NO. 1032

POWER OF ATTORNEY NOTICE

25883
MUNCK WILSON MANDALA L.L.P
P.O. Drawer 800889
DALLAS, TX 75380

OC000000115877168

Date Mailed: 04/02/2020

NOTICE REGARDING CHANGE OF POWER OF ATTORNEY

This is in response to the Power of Attorney filed 03/24/2020.

- The Power of Attorney to you in this application has been revoked by the applicant. Future correspondence will be mailed to the new address of record(37 CFR 1.33).

Questions about the contents of this notice and the requirements it sets forth should be directed to the Office of Data Management, Application Assistance Unit, at **(571) 272-4000** or **(571) 272-4200** or **1-888-786-0101**.

/cnguyen/

UNITED STATES PATENT AND TRADEMARK OFFICE

UNITED STATES DEPARTMENT OF COMMERCE
United States Patent and Trademark Office
Address: COMMISSIONER FOR PATENTS
P.O. Box 1450
Alexandria, Virginia 22313-1450
www.uspto.gov

APPLICATION NUMBER	FILING OR 371(C) DATE	FIRST NAMED APPLICANT	ATTY. DOCKET NO./TITLE
15/590,282	05/09/2017	G.R. MOHAN RAO	GRTD.01.01.DV5

CONFIRMATION NO. 1032

POA ACCEPTANCE LETTER

40672
BILL R. NAIFEH
PO BOX 803423
DALLAS, TX 75380

OC000000115877214

Date Mailed: 04/02/2020

NOTICE OF ACCEPTANCE OF POWER OF ATTORNEY

This is in response to the Power of Attorney filed 03/24/2020.

The Power of Attorney in this application is accepted. Correspondence in this application will be mailed to the above address as provided by 37 CFR 1.33.

Questions about the contents of this notice and the requirements it sets forth should be directed to the Office of Data Management, Application Assistance Unit, at **(571) 272-4000** or **(571) 272-4200** or **1-888-786-0101**.

/cnguyen/

PTO/AIA/81A (02-15)
Approved for use through 03/31/2021. OMB 0651-0035
U.S. Patent and Trademark Office; U.S. DEPARTMENT OF COMMERCE
Under the Paperwork Reduction Act of 1995 no persons are required to respond to a collection of information unless it displays a valid OMB control number

PATENT - POWER OF ATTORNEY OR REVOCATION OF POWER OF ATTORNEY WITH A NEW POWER OF ATTORNEY AND CHANGE OF CORRESPONDENCE ADDRESS

Patent Number	10,510,842
Issue Date	12-17-2019
First Named Inventor	G.R. Mohan Rao
Title	SEMICONDUCTOR DEVICES WITH GRADED DOPANT REGIONS
Attorney Docket No.	GRTD.01.01.DV5

I hereby revoke all previous powers of attorney given in the above-identified patent.

☐ A Power of Attorney is submitted herewith.

OR

☒ I hereby appoint Practitioner(s) associated with the Customer Number identified in the box at right as my/our attorney(s) or agent(s) with respect to the patent identified above, and to transact all business in the United States Patent and Trademark Office connected therewith: 40672

OR

☐ I hereby appoint Practitioner(s) named below as my/our attorney(s) or agent(s) with respect to the patent identified above, and to transact all business in the United States Patent and Trademark Office connected therewith:

Practitioner(s) Name	Registration Number

Please recognize or change the correspondence address for the above-identified patent to:

☒ The address associated with the above-identified Customer Number;

OR

☐ The address associated with the Customer Number identified in the box at right:

OR

☐ Firm or Individual Name					
Address					
City		State		Zip	
Country					
Telephone		Email			

I am the:

☒ Applicant.

OR

☐ Patent owner.

Statement under 37 CFR 3.73(c) (Form PTO/AIA/96) submitted herewith or filed on _____.

SIGNATURE of Applicant or Patent Owner

Signature	Philip W. John Jr.	Date	3/29/2020
Name	Philip W. John, Jr.	Telephone	
Title and Company	PRESIDENT of GREENTHREAD, LLC		

NOTE: Signatures of all the applicants or patent owners of the entire interest or their representative(s) are required. If more than one signature is required, submit multiple forms, check the box below, and identify the total number of forms submitted in the blank below.

☑ A total of 1 forms are submitted.

This collection of information is required by 37 CFR 1.31, 1.32, and 1.33. The information is required to obtain or retain a benefit by the public, which is to update (and by the USPTO to process) the file of a patent or reexamination proceeding. Confidentiality is governed by 35 U.S.C. 122 and 37 CFR 1.14. This collection is estimated to take 3 minutes to complete, including gathering, preparing, and submitting the completed application form to the USPTO. Time will vary depending upon the individual case. Any comments on the amount of time you require to complete this form and/or suggestions for reducing this burden, should be sent to the Chief Information Officer, U.S. Patent and Trademark Office, U.S. Department of Commerce, P.O. Box 1450, Alexandria, VA 22313-1450. DO NOT SEND FEES OR COMPLETED FORMS TO THIS ADDRESS. **SEND TO: Commissioner for Patents, P.O. Box 1450, Alexandria, VA 22313-1450.**

If you need assistance in completing the form, call 1-800-PTO-9199 and select option 2.

Electronic Acknowledgement Receipt

EFS ID:	38951562
Application Number:	15590282
International Application Number:	
Confirmation Number:	1032
Title of Invention:	SEMICONDUCTOR DEVICES WITH GRADED DOPANT REGIONS
First Named Inventor/Applicant Name:	G.R. MOHAN RAO
Customer Number:	25883
Filer:	Bill Naifeh/April Reasoner
Filer Authorized By:	Bill Naifeh
Attorney Docket Number:	GRTD60-33439
Receipt Date:	24-MAR-2020
Filing Date:	09-MAY-2017
Time Stamp:	13:13:47
Application Type:	Utility under 35 USC 111(a)

Payment information:

Submitted with Payment	no

File Listing:

Document Number	Document Description	File Name	File Size(Bytes)/ Message Digest	Multi Part /.zip	Pages (if appl.)
1	Power of Attorney	POA_10510842.pdf	2157315 4747dfb59b03d8bd4c2011914ef338cafd3c00fc	no	1

Warnings:

Information:	
Total Files Size (in bytes):	2157315

This Acknowledgement Receipt evidences receipt on the noted date by the USPTO of the indicated documents, characterized by the applicant, and including page counts, where applicable. It serves as evidence of receipt similar to a Post Card, as described in MPEP 503.

New Applications Under 35 U.S.C. 111
If a new application is being filed and the application includes the necessary components for a filing date (see 37 CFR 1.53(b)-(d) and MPEP 506), a Filing Receipt (37 CFR 1.54) will be issued in due course and the date shown on this Acknowledgement Receipt will establish the filing date of the application.
National Stage of an International Application under 35 U.S.C. 371
If a timely submission to enter the national stage of an international application is compliant with the conditions of 35 U.S.C. 371 and other applicable requirements a Form PCT/DO/EO/903 indicating acceptance of the application as a national stage submission under 35 U.S.C. 371 will be issued in addition to the Filing Receipt, in due course.
New International Application Filed with the USPTO as a Receiving Office
If a new international application is being filed and the international application includes the necessary components for an international filing date (see PCT Article 11 and MPEP 1810), a Notification of the International Application Number and of the International Filing Date (Form PCT/RO/105) will be issued in due course, subject to prescriptions concerning national security, and the date shown on this Acknowledgement Receipt will establish the international filing date of the application.

UNITED STATES PATENT AND TRADEMARK OFFICE

UNITED STATES DEPARTMENT OF COMMERCE
United States Patent and Trademark Office
Address: COMMISSIONER FOR PATENTS
P.O. Box 1450
Alexandria, Virginia 22313-1450
www.uspto.gov

APPLICATION NO.	ISSUE DATE	PATENT NO.	ATTORNEY DOCKET NO.	CONFIRMATION NO.
15/590,282	12/17/2019	10510842	GRTD60-33439	1032

25883 7590 11/26/2019
MUNCK WILSON MANDALA L.L.P
P.O. Drawer 800889
DALLAS, TX 75380

ISSUE NOTIFICATION

The projected patent number and issue date are specified above.

Determination of Patent Term Adjustment under 35 U.S.C. 154 (b)
(application filed on or after May 29, 2000)

The Patent Term Adjustment is 0 day(s). Any patent to issue from the above-identified application will include an indication of the adjustment on the front page.

If a Continued Prosecution Application (CPA) was filed in the above-identified application, the filing date that determines Patent Term Adjustment is the filing date of the most recent CPA.

Applicant will be able to obtain more detailed information by accessing the Patent Application Information Retrieval (PAIR) WEB site (http://pair.uspto.gov).

Any questions regarding the Patent Term Extension or Adjustment determination should be directed to the Office of Patent Legal Administration at (571)-272-7702. Questions relating to issue and publication fee payments should be directed to the Application Assistance Unit (AAU) of the Office of Data Management (ODM) at (571)-272-4200.

APPLICANT(s) (Please see PAIR WEB site http://pair.uspto.gov for additional applicants):

G.R. MOHAN RAO, ALLEN, TX;
GREENTHREAD, LLC, DALLAS, TX;

The United States represents the largest, most dynamic marketplace in the world and is an unparalleled location for business investment, innovation, and commercialization of new technologies. The USA offers tremendous resources and advantages for those who invest and manufacture goods here. Through SelectUSA, our nation works to encourage and facilitate business investment. To learn more about why the USA is the best country in the world to develop technology, manufacture products, and grow your business, visit SelectUSA.gov.

PART B - FEE(S) TRANSMITTAL

Complete and send this form, together with applicable fee(s), by mail or fax, or via EFS-Web.

By mail, send to: Mail Stop ISSUE FEE
Commissioner for Patents
P.O. Box 1450
Alexandria, Virginia 22313-1450

By fax, send to: (571)-273-2885

INSTRUCTIONS: This form should be used for transmitting the ISSUE FEE and PUBLICATION FEE (if required). Blocks 1 through 5 should be completed where appropriate. All further correspondence including the Patent, advance orders and notification of maintenance fees will be mailed to the current correspondence address as indicated unless corrected below or directed otherwise in Block 1, by (a) specifying a new correspondence address; and/or (b) indicating a separate "FEE ADDRESS" for maintenance fee notifications.

CURRENT CORRESPONDENCE ADDRESS (Note: Use Block 1 for any change of address)

25883 7590 11/05/2019
MUNCK WILSON MANDALA L.L.P
P.O. Drawer 800889
DALLAS, TX 75380

Note: A certificate of mailing can only be used for domestic mailings of the Fee(s) Transmittal. This certificate cannot be used for any other accompanying papers. Each additional paper, such as an assignment or formal drawing, must have its own certificate of mailing or transmission.

Certificate of Mailing or Transmission

I hereby certify that this Fee(s) Transmittal is being deposited with the United States Postal Service with sufficient postage for first class mail in an envelope addressed to the Mail Stop ISSUE FEE address above, or being transmitted to the USPTO via EFS-Web or by facsimile to (571) 273-2885, on the date below.

(Typed or printed name)

(Signature)

(Date)

APPLICATION NO.	FILING DATE	FIRST NAMED INVENTOR	ATTORNEY DOCKET NO.	CONFIRMATION NO.
15/590,282	05/09/2017	G.R. MOHAN RAO	GRTD60-33439	1032

TITLE OF INVENTION: SEMICONDUCTOR DEVICES WITH GRADED DOPANT REGIONS

APPLN. TYPE	ENTITY STATUS	ISSUE FEE DUE	PUBLICATION FEE DUE	PREV. PAID ISSUE FEE	TOTAL FEE(S) DUE	DATE DUE
nonprovisional	SMALL	$500	$0.00	$0.00	$500	02/05/2020

EXAMINER	ART UNIT	CLASS-SUBCLASS
ARORA, AJAY	2892	257-655000

1. Change of correspondence address or indication of "Fee Address" (37 CFR 1.363).

❑ Change of correspondence address (or Change of Correspondence Address form PTO/SB/122) attached.

❑ "Fee Address" indication (or "Fee Address" Indication form PTO/SB/47; Rev 03-09 or more recent) attached. **Use of a Customer Number is required.**

2. For printing on the patent front page, list
(1) The names of up to 3 registered patent attorneys or agents OR, alternatively,
(2) The name of a single firm (having as a member a registered attorney or agent) and the names of up to 2 registered patent attorneys or agents. If no name is listed, no name will be printed.

1 Bill R. Naifeh
2 Timothy F. Bliss
3

3. ASSIGNEE NAME AND RESIDENCE DATA TO BE PRINTED ON THE PATENT (print or type)

PLEASE NOTE: Unless an assignee is identified below, no assignee data will appear on the patent. If an assignee is identified below, the document must have been previously recorded, or filed for recordation, as set forth in 37 CFR 3.11 and 37 CFR 3.81(a). Completion of this form is NOT a substitute for filing an assignment.

(A) NAME OF ASSIGNEE: GREENTHREAD, LLC

(B) RESIDENCE: (CITY and STATE OR COUNTRY): Dallas, Texas

Please check the appropriate assignee category or categories (will not be printed on the patent) : ❑ Individual ☒ Corporation or other private group entity ❑ Government

4a. Fees submitted: ☒ Issue Fee ❑ Publication Fee (if required) ❑ Advance Order - # of Copies _____

4b. Method of Payment: *(Please first reapply any previously paid fee shown above)*

☒ Electronic Payment via EFS-Web ❑ Enclosed check ❑ Non-electronic payment by credit card (Attach form PTO-2038)

❑ The Director is hereby authorized to charge the required fee(s), any deficiency, or credit any overpayment to Deposit Account No. _____

5. **Change in Entity Status** (from status indicated above)

❑ Applicant certifying micro entity status. See 37 CFR 1.29

❑ Applicant asserting small entity status. See 37 CFR 1.27

❑ Applicant changing to regular undiscounted fee status.

NOTE: Absent a valid certification of Micro Entity Status (see forms PTO/SB/15A and 15B), issue fee payment in the micro entity amount will not be accepted at the risk of application abandonment.
NOTE: If the application was previously under micro entity status, checking this box will be taken to be a notification of loss of entitlement to micro entity status.
NOTE: Checking this box will be taken to be a notification of loss of entitlement to small or micro entity status, as applicable.

NOTE: This form must be signed in accordance with 37 CFR 1.31 and 1.33. See 37 CFR 1.4 for signature requirements and certifications.

Authorized Signature /Bill R. Naifeh, Reg No. 44962/ Date 2019-11-08

Typed or printed name Bill R. Naifeh Registration No. 44,962

Electronic Patent Application Fee Transmittal

Application Number:	15590282
Filing Date:	09-May-2017
Title of Invention:	SEMICONDUCTOR DEVICES WITH GRADED DOPANT REGIONS
First Named Inventor/Applicant Name:	G.R. MOHAN RAO
Filer:	Bill Naifeh/April Reasoner
Attorney Docket Number:	GRTD60-33439

Filed as Small Entity

Filing Fees for Utility under 35 USC 111(a)

Description	Fee Code	Quantity	Amount	Sub-Total in USD($)
Basic Filing:				
Pages:				
Claims:				
Miscellaneous-Filing:				
Petition:				
Patent-Appeals-and-Interference:				
Post-Allowance-and-Post-Issuance:				
UTILITY APPL ISSUE FEE	2501	1	500	500

Description	Fee Code	Quantity	Amount	Sub-Total in USD($)
Extension-of-Time:				
Miscellaneous:				
			Total in USD ($)	**500**

Electronic Acknowledgement Receipt

EFS ID:	37702171
Application Number:	15590282
International Application Number:	
Confirmation Number:	1032
Title of Invention:	SEMICONDUCTOR DEVICES WITH GRADED DOPANT REGIONS
First Named Inventor/Applicant Name:	G.R. MOHAN RAO
Customer Number:	25883
Filer:	Bill Naifeh/April Reasoner
Filer Authorized By:	Bill Naifeh
Attorney Docket Number:	GRTD60-33439
Receipt Date:	08-NOV-2019
Filing Date:	09-MAY-2017
Time Stamp:	15:54:44
Application Type:	Utility under 35 USC 111(a)

Payment information:

Submitted with Payment	yes
Payment Type	CARD
Payment was successfully received in RAM	$500
RAM confirmation Number	E2019A8F55144730
Deposit Account	
Authorized User	

The Director of the USPTO is hereby authorized to charge indicated fees and credit any overpayment as follows:

File Listing:

Document Number	Document Description	File Name	File Size(Bytes)/ Message Digest	Multi Part /.zip	Pages (if appl.)
1	Issue Fee Payment (PTO-85B)	IssueFeeTransmittal.pdf	84668 96b746222dc677bbed9d72251a916c2e9e706228	no	1
Warnings:					
Information:					
2	Fee Worksheet (SB06)	fee-info.pdf	30445 bc1a090fca3a8809a550507a7835133ee6bf76aa	no	2
Warnings:					
Information:					
		Total Files Size (in bytes):	115113		

This Acknowledgement Receipt evidences receipt on the noted date by the USPTO of the indicated documents, characterized by the applicant, and including page counts, where applicable. It serves as evidence of receipt similar to a Post Card, as described in MPEP 503.

New Applications Under 35 U.S.C. 111
If a new application is being filed and the application includes the necessary components for a filing date (see 37 CFR 1.53(b)-(d) and MPEP 506), a Filing Receipt (37 CFR 1.54) will be issued in due course and the date shown on this Acknowledgement Receipt will establish the filing date of the application.
National Stage of an International Application under 35 U.S.C. 371
If a timely submission to enter the national stage of an international application is compliant with the conditions of 35 U.S.C. 371 and other applicable requirements a Form PCT/DO/EO/903 indicating acceptance of the application as a national stage submission under 35 U.S.C. 371 will be issued in addition to the Filing Receipt, in due course.
New International Application Filed with the USPTO as a Receiving Office
If a new international application is being filed and the international application includes the necessary components for an international filing date (see PCT Article 11 and MPEP 1810), a Notification of the International Application Number and of the International Filing Date (Form PCT/RO/105) will be issued in due course, subject to prescriptions concerning national security, and the date shown on this Acknowledgement Receipt will establish the international filing date of the application.

UNITED STATES PATENT AND TRADEMARK OFFICE

UNITED STATES DEPARTMENT OF COMMERCE
United States Patent and Trademark Office
Address: COMMISSIONER FOR PATENTS
P.O. Box 1450
Alexandria, Virginia 22313-1450
www.uspto.gov

NOTICE OF ALLOWANCE AND FEE(S) DUE

25883 7590 11/05/2019
MUNCK WILSON MANDALA L.L.P
P.O. Drawer 800889
DALLAS, TX 75380

EXAMINER
ARORA, AJAY

ART UNIT	PAPER NUMBER
2892	

DATE MAILED: 11/05/2019

APPLICATION NO.	FILING DATE	FIRST NAMED INVENTOR	ATTORNEY DOCKET NO.	CONFIRMATION NO.
15/590,282	05/09/2017	G.R. MOHAN RAO	GRTD60-33439	1032

TITLE OF INVENTION: SEMICONDUCTOR DEVICES WITH GRADED DOPANT REGIONS

APPLN. TYPE	ENTITY STATUS	ISSUE FEE DUE	PUBLICATION FEE DUE	PREV. PAID ISSUE FEE	TOTAL FEE(S) DUE	DATE DUE
nonprovisional	SMALL	$500	$0.00	$0.00	$500	02/05/2020

THE APPLICATION IDENTIFIED ABOVE HAS BEEN EXAMINED AND IS ALLOWED FOR ISSUANCE AS A PATENT. PROSECUTION ON THE MERITS IS CLOSED. THIS NOTICE OF ALLOWANCE IS NOT A GRANT OF PATENT RIGHTS. THIS APPLICATION IS SUBJECT TO WITHDRAWAL FROM ISSUE AT THE INITIATIVE OF THE OFFICE OR UPON PETITION BY THE APPLICANT. SEE 37 CFR 1.313 AND MPEP 1308.

THE ISSUE FEE AND PUBLICATION FEE (IF REQUIRED) MUST BE PAID WITHIN THREE MONTHS FROM THE MAILING DATE OF THIS NOTICE OR THIS APPLICATION SHALL BE REGARDED AS ABANDONED. THIS STATUTORY PERIOD CANNOT BE EXTENDED. SEE 35 U.S.C. 151. THE ISSUE FEE DUE INDICATED ABOVE DOES NOT REFLECT A CREDIT FOR ANY PREVIOUSLY PAID ISSUE FEE IN THIS APPLICATION. IF AN ISSUE FEE HAS PREVIOUSLY BEEN PAID IN THIS APPLICATION (AS SHOWN ABOVE), THE RETURN OF PART B OF THIS FORM WILL BE CONSIDERED A REQUEST TO REAPPLY THE PREVIOUSLY PAID ISSUE FEE TOWARD THE ISSUE FEE NOW DUE.

HOW TO REPLY TO THIS NOTICE:

I. Review the ENTITY STATUS shown above. If the ENTITY STATUS is shown as SMALL or MICRO, verify whether entitlement to that entity status still applies.

If the ENTITY STATUS is the same as shown above, pay the TOTAL FEE(S) DUE shown above.

If the ENTITY STATUS is changed from that shown above, on PART B - FEE(S) TRANSMITTAL, complete section number 5 titled "Change in Entity Status (from status indicated above)".

For purposes of this notice, small entity fees are 1/2 the amount of undiscounted fees, and micro entity fees are 1/2 the amount of small entity fees.

II. PART B - FEE(S) TRANSMITTAL, or its equivalent, must be completed and returned to the United States Patent and Trademark Office (USPTO) with your ISSUE FEE and PUBLICATION FEE (if required). If you are charging the fee(s) to your deposit account, section "4b" of Part B - Fee(s) Transmittal should be completed and an extra copy of the form should be submitted. If an equivalent of Part B is filed, a request to reapply a previously paid issue fee must be clearly made, and delays in processing may occur due to the difficulty in recognizing the paper as an equivalent of Part B.

III. All communications regarding this application must give the application number. Please direct all communications prior to issuance to Mail Stop ISSUE FEE unless advised to the contrary.

IMPORTANT REMINDER: Maintenance fees are due in utility patents issuing on applications filed on or after Dec. 12, 1980. It is patentee's responsibility to ensure timely payment of maintenance fees when due. More information is available at www.uspto.gov/PatentMaintenanceFees.

Greenthread Ex. 2069, p. 33 of 199
Semiconductor v. Greenthread
IPR2023-01242

PART B - FEE(S) TRANSMITTAL

Complete and send this form, together with applicable fee(s), by mail or fax, or via EFS-Web.

By mail, send to: Mail Stop ISSUE FEE
Commissioner for Patents
P.O. Box 1450
Alexandria, Virginia 22313-1450

By fax, send to: (571)-273-2885

INSTRUCTIONS: This form should be used for transmitting the ISSUE FEE and PUBLICATION FEE (if required). Blocks 1 through 5 should be completed where appropriate. All further correspondence including the Patent, advance orders and notification of maintenance fees will be mailed to the current correspondence address as indicated unless corrected below or directed otherwise in Block 1, by (a) specifying a new correspondence address; and/or (b) indicating a separate "FEE ADDRESS" for maintenance fee notifications.

CURRENT CORRESPONDENCE ADDRESS (Note: Use Block 1 for any change of address)

25883 7590 11/05/2019
MUNCK WILSON MANDALA L.L.P
P.O. Drawer 800889
DALLAS, TX 75380

Note: A certificate of mailing can only be used for domestic mailings of the Fee(s) Transmittal. This certificate cannot be used for any other accompanying papers. Each additional paper, such as an assignment or formal drawing, must have its own certificate of mailing or transmission.

Certificate of Mailing or Transmission

I hereby certify that this Fee(s) Transmittal is being deposited with the United States Postal Service with sufficient postage for first class mail in an envelope addressed to the Mail Stop ISSUE FEE address above, or being transmitted to the USPTO via EFS-Web or by facsimile to (571) 273-2885, on the date below.

(Typed or printed name)

(Signature)

(Date)

APPLICATION NO.	FILING DATE	FIRST NAMED INVENTOR	ATTORNEY DOCKET NO.	CONFIRMATION NO.
15/590,282	05/09/2017	G.R. MOHAN RAO	GRTD60-33439	1032

TITLE OF INVENTION: SEMICONDUCTOR DEVICES WITH GRADED DOPANT REGIONS

APPLN. TYPE	ENTITY STATUS	ISSUE FEE DUE	PUBLICATION FEE DUE	PREV. PAID ISSUE FEE	TOTAL FEE(S) DUE	DATE DUE
nonprovisional	SMALL	$500	$0.00	$0.00	$500	02/05/2020

EXAMINER	ART UNIT	CLASS-SUBCLASS
ARORA, AJAY	2892	257-655000

1. Change of correspondence address or indication of "Fee Address" (37 CFR 1.363).

❑ Change of correspondence address (or Change of Correspondence Address form PTO/SB/122) attached.

❑ "Fee Address" indication (or "Fee Address" Indication form PTO/SB/47; Rev 03-09 or more recent) attached. **Use of a Customer Number is required.**

2. For printing on the patent front page, list
(1) The names of up to 3 registered patent attorneys or agents OR, alternatively,
(2) The name of a single firm (having as a member a registered attorney or agent) and the names of up to 2 registered patent attorneys or agents. If no name is listed, no name will be printed.

1_____
2_____
3_____

3. ASSIGNEE NAME AND RESIDENCE DATA TO BE PRINTED ON THE PATENT (print or type)

PLEASE NOTE: Unless an assignee is identified below, no assignee data will appear on the patent. If an assignee is identified below, the document must have been previously recorded, or filed for recordation, as set forth in 37 CFR 3.11 and 37 CFR 3.81(a). Completion of this form is NOT a substitute for filing an assignment.

(A) NAME OF ASSIGNEE (B) RESIDENCE: (CITY and STATE OR COUNTRY)

Please check the appropriate assignee category or categories (will not be printed on the patent) : ❑ Individual ❑ Corporation or other private group entity ❑ Government

4a. Fees submitted: ❑Issue Fee ❑Publication Fee (if required) ❑Advance Order - # of Copies _____

4b. Method of Payment: *(Please first reapply any previously paid fee shown above)*

❑ Electronic Payment via EFS-Web ❑ Enclosed check ❑ Non-electronic payment by credit card (Attach form PTO-2038)

❑ The Director is hereby authorized to charge the required fee(s), any deficiency, or credit any overpayment to Deposit Account No. _____

5. **Change in Entity Status** (from status indicated above)

❑ Applicant certifying micro entity status. See 37 CFR 1.29

❑ Applicant asserting small entity status. See 37 CFR 1.27

❑ Applicant changing to regular undiscounted fee status.

NOTE: Absent a valid certification of Micro Entity Status (see forms PTO/SB/15A and 15B), issue fee payment in the micro entity amount will not be accepted at the risk of application abandonment.
NOTE: If the application was previously under micro entity status, checking this box will be taken to be a notification of loss of entitlement to micro entity status.
NOTE: Checking this box will be taken to be a notification of loss of entitlement to small or micro entity status, as applicable.

NOTE: This form must be signed in accordance with 37 CFR 1.31 and 1.33. See 37 CFR 1.4 for signature requirements and certifications.

Authorized Signature _____ Date _____

Typed or printed name _____ Registration No. _____

Greenthread Ex. 2069, p. 34 of 199
Semiconductor v. Greenthread
IPR2023-01242

UNITED STATES DEPARTMENT OF COMMERCE
United States Patent and Trademark Office
Address: COMMISSIONER FOR PATENTS
P.O. Box 1450
Alexandria, Virginia 22313-1450
www.uspto.gov

APPLICATION NO.	FILING DATE	FIRST NAMED INVENTOR	ATTORNEY DOCKET NO.	CONFIRMATION NO.
15/590,282	05/09/2017	G.R. MOHAN RAO	GRTD60-33439	1032

25883 7590 11/05/2019
MUNCK WILSON MANDALA L.L.P
P.O. Drawer 800889
DALLAS, TX 75380

EXAMINER
ARORA, AJAY

ART UNIT	PAPER NUMBER
2892	

DATE MAILED: 11/05/2019

Determination of Patent Term Adjustment under 35 U.S.C. 154 (b)
(Applications filed on or after May 29, 2000)

The Office has discontinued providing a Patent Term Adjustment (PTA) calculation with the Notice of Allowance.

Section 1(h)(2) of the AIA Technical Corrections Act amended 35 U.S.C. 154(b)(3)(B)(i) to eliminate the requirement that the Office provide a patent term adjustment determination with the notice of allowance. See Revisions to Patent Term Adjustment, 78 Fed. Reg. 19416, 19417 (Apr. 1, 2013). Therefore, the Office is no longer providing an initial patent term adjustment determination with the notice of allowance. The Office will continue to provide a patent term adjustment determination with the Issue Notification Letter that is mailed to applicant approximately three weeks prior to the issue date of the patent, and will include the patent term adjustment on the patent. Any request for reconsideration of the patent term adjustment determination (or reinstatement of patent term adjustment) should follow the process outlined in 37 CFR 1.705.

Any questions regarding the Patent Term Extension or Adjustment determination should be directed to the Office of Patent Legal Administration at (571)-272-7702. Questions relating to issue and publication fee payments should be directed to the Customer Service Center of the Office of Patent Publication at 1-(888)-786-0101 or (571)-272-4200.

Greenthread Ex. 2069, p. 35 of 199
Semiconductor v. Greenthread
IPR2023-01242

OMB Clearance and PRA Burden Statement for PTOL-85 Part B

The Paperwork Reduction Act (PRA) of 1995 requires Federal agencies to obtain Office of Management and Budget approval before requesting most types of information from the public. When OMB approves an agency request to collect information from the public, OMB (i) provides a valid OMB Control Number and expiration date for the agency to display on the instrument that will be used to collect the information and (ii) requires the agency to inform the public about the OMB Control Number's legal significance in accordance with 5 CFR 1320.5(b).

The information collected by PTOL-85 Part B is required by 37 CFR 1.311. The information is required to obtain or retain a benefit by the public which is to file (and by the USPTO to process) an application. Confidentiality is governed by 35 U.S.C. 122 and 37 CFR 1.14. This collection is estimated to take 30 minutes to complete, including gathering, preparing, and submitting the completed application form to the USPTO. Time will vary depending upon the individual case. Any comments on the amount of time you require to complete this form and/or suggestions for reducing this burden, should be sent to the Chief Information Officer, U.S. Patent and Trademark Office, U.S. Department of Commerce, P.O. Box 1450, Alexandria, Virginia 22313-1450. DO NOT SEND FEES OR COMPLETED FORMS TO THIS ADDRESS. SEND TO: Commissioner for Patents, P.O. Box 1450, Alexandria, Virginia 22313-1450. Under the Paperwork Reduction Act of 1995, no persons are required to respond to a collection of information unless it displays a valid OMB control number.

Privacy Act Statement

The Privacy Act of 1974 (P.L. 93-579) requires that you be given certain information in connection with your submission of the attached form related to a patent application or patent. Accordingly, pursuant to the requirements of the Act, please be advised that: (1) the general authority for the collection of this information is 35 U.S.C. 2(b)(2); (2) furnishing of the information solicited is voluntary; and (3) the principal purpose for which the information is used by the U.S. Patent and Trademark Office is to process and/or examine your submission related to a patent application or patent. If you do not furnish the requested information, the U.S. Patent and Trademark Office may not be able to process and/or examine your submission, which may result in termination of proceedings or abandonment of the application or expiration of the patent.

The information provided by you in this form will be subject to the following routine uses:

1. The information on this form will be treated confidentially to the extent allowed under the Freedom of Information Act (5 U.S.C. 552) and the Privacy Act (5 U.S.C 552a). Records from this system of records may be disclosed to the Department of Justice to determine whether disclosure of these records is required by the Freedom of Information Act.
2. A record from this system of records may be disclosed, as a routine use, in the course of presenting evidence to a court, magistrate, or administrative tribunal, including disclosures to opposing counsel in the course of settlement negotiations.
3. A record in this system of records may be disclosed, as a routine use, to a Member of Congress submitting a request involving an individual, to whom the record pertains, when the individual has requested assistance from the Member with respect to the subject matter of the record.
4. A record in this system of records may be disclosed, as a routine use, to a contractor of the Agency having need for the information in order to perform a contract. Recipients of information shall be required to comply with the requirements of the Privacy Act of 1974, as amended, pursuant to 5 U.S.C. 552a(m).
5. A record related to an International Application filed under the Patent Cooperation Treaty in this system of records may be disclosed, as a routine use, to the International Bureau of the World Intellectual Property Organization, pursuant to the Patent Cooperation Treaty.
6. A record in this system of records may be disclosed, as a routine use, to another federal agency for purposes of National Security review (35 U.S.C. 181) and for review pursuant to the Atomic Energy Act (42 U.S.C. 218(c)).
7. A record from this system of records may be disclosed, as a routine use, to the Administrator, General Services, or his/her designee, during an inspection of records conducted by GSA as part of that agency's responsibility to recommend improvements in records management practices and programs, under authority of 44 U.S.C. 2904 and 2906. Such disclosure shall be made in accordance with the GSA regulations governing inspection of records for this purpose, and any other relevant (i.e., GSA or Commerce) directive. Such disclosure shall not be used to make determinations about individuals.
8. A record from this system of records may be disclosed, as a routine use, to the public after either publication of the application pursuant to 35 U.S.C. 122(b) or issuance of a patent pursuant to 35 U.S.C. 151. Further, a record may be disclosed, subject to the limitations of 37 CFR 1.14, as a routine use, to the public if the record was filed in an application which became abandoned or in which the proceedings were terminated and which application is referenced by either a published application, an application open to public inspection or an issued patent.
9. A record from this system of records may be disclosed, as a routine use, to a Federal, State, or local law enforcement agency, if the USPTO becomes aware of a violation or potential violation of law or regulation.

Notice of Allowability	Application No. 15/590,282	Applicant(s) RAO, G.R. MOHAN	
	Examiner AJAY ARORA	Art Unit 2892	AIA (FITF) Status No

-- The MAILING DATE of this communication appears on the cover sheet with the correspondence address--

All claims being allowable, PROSECUTION ON THE MERITS IS (OR REMAINS) CLOSED in this application. If not included herewith (or previously mailed), a Notice of Allowance (PTOL-85) or other appropriate communication will be mailed in due course. **THIS NOTICE OF ALLOWABILITY IS NOT A GRANT OF PATENT RIGHTS.** This application is subject to withdrawal from issue at the initiative of the Office or upon petition by the applicant. See 37 CFR 1.313 and MPEP 1308.

1. ☑ This communication is responsive to 10/9/2019.
   ☐ A declaration(s)/affidavit(s) under **37 CFR 1.130(b)** was/were filed on _____.

2. ☐ An election was made by the applicant in response to a restriction requirement set forth during the interview on _____; the restriction requirement and election have been incorporated into this action.

3. ☑ The allowed claim(s) is/are 1-16 and 19-20 . As a result of the allowed claim(s), you may be eligible to benefit from the **Patent Prosecution Highway** program at a participating intellectual property office for the corresponding application. For more information , please see **http://www.uspto.gov/patents/init_events/pph/index.jsp** or send an inquiry to **PPHfeedback@uspto.gov.**

4. ☐ Acknowledgment is made of a claim for foreign priority under 35 U.S.C. § 119(a)-(d) or (f).

   Certified copies:

   a) ☐ All b) ☐ Some *c) ☐ None of the:

   1. ☐ Certified copies of the priority documents have been received.
   2. ☐ Certified copies of the priority documents have been received in Application No. _____ .
   3. ☐ Copies of the certified copies of the priority documents have been received in this national stage application from the International Bureau (PCT Rule 17.2(a)).

   * Certified copies not received: _____ .

Applicant has THREE MONTHS FROM THE "MAILING DATE" of this communication to file a reply complying with the requirements noted below. Failure to timely comply will result in ABANDONMENT of this application.
THIS THREE-MONTH PERIOD IS NOT EXTENDABLE.

5. ☐ CORRECTED DRAWINGS (as "replacement sheets") must be submitted.
   ☐ including changes required by the attached Examiner's Amendment / Comment or in the Office action of Paper No./Mail Date _____ .

   Identifying indicia such as the application number (see 37 CFR 1.84(c)) should be written on the drawings in the front (not the back) of each sheet. Replacement sheet(s) should be labeled as such in the header according to 37 CFR 1.121(d).

6. ☐ DEPOSIT OF and/or INFORMATION about the deposit of BIOLOGICAL MATERIAL must be submitted. Note the attached Examiner's comment regarding REQUIREMENT FOR THE DEPOSIT OF BIOLOGICAL MATERIAL.

Attachment(s)

1. ☐ Notice of References Cited (PTO-892)
2. ☐ Information Disclosure Statements (PTO/SB/08), Paper No./Mail Date _____.
3. ☐ Examiner's Comment Regarding Requirement for Deposit of Biological Material _____.
4. ☐ Interview Summary (PTO-413), Paper No./Mail Date. _____.
5. ☐ Examiner's Amendment/Comment
6. ☑ Examiner's Statement of Reasons for Allowance
7. ☐ Other _____.

/AJAY ARORA/
Primary Examiner, Art Unit 2892

DETAILED ACTION

Notice of Pre-AIA or AIA Status

1. The present application is being examined under the pre-AIA first to invent provisions.

Continued Examination Under 37 CFR 1.114

2. A request for continued examination under 37 CFR 1.114, including the fee set forth in 37 CFR 1.17(e), was filed in this application after final rejection. Since this application is eligible for continued examination under 37 CFR 1.114, and the fee set forth in 37 CFR 1.17(e) has been timely paid, the finality of the previous Office action has been withdrawn pursuant to 37 CFR 1.114. Applicant's submission filed on 9/16/2019 has been entered.

Reasons for Allowance

3. Claims 1-16 and 19-20 are allowed. The following is an examiner's statement of reasons for allowance:

4. Claims 1-8 and 19-20 are allowed because the prior art of record does not teach or suggest, singularly or in combination, at least the limitations of the base claim 1 that requires "a first active region" within which "transistors can be formed" (se lines 4-6) and "a second active region separate from the first active region" within which "transistors can be formed" (see lines 7-8) in conjunction with "at least one graded dopant

concentration to aid carrier movement from the first surface to the second surface of the substrate" (see last 3 lines of claim 1). Also see applicant's arguments presented on page 5, 4th paragraph to page 7, 3rd last paragraph of applicant's response of 9/16/2019, which are persuasive.

5. Similarly, claims 9-16 are allowed because the prior art of record does not teach or suggest, singularly or in combination, at least the limitations of the base claim 9 that requires "a first active region" within which "transistors can be formed" (se lines 5-6 of claim 9) and "a second active region separate from the first active region" within which "transistors can be formed" (see lines 7-9 of claim 9) in conjunction with "at least one graded dopant concentration to aid carrier movement from the surface to the substrate" (see last 3 lines of claim 9).

6. Any comments considered necessary by applicant must be submitted no later than the payment of the issue fee and, to avoid processing delays, should preferably accompany the issue fee. Such submissions should be clearly labeled "Comments on Statement of Reasons for Allowance."

Conclusion

7. Any inquiry concerning this communication or earlier communications from the examiner should be directed to AJAY ARORA whose telephone number is (571)272-8347. The examiner can normally be reached on 9 AM - 5 PM.

Examiner interviews are available via telephone, in-person, and video conferencing using a USPTO supplied web-based collaboration tool. To schedule an

interview, applicant is encouraged to use the USPTO Automated Interview Request (AIR) at http://www.uspto.gov/interviewpractice.

If attempts to reach the examiner by telephone are unsuccessful, the examiner's supervisor, Thao X. Le can be reached on 5712721708. The fax phone number for the organization where this application or proceeding is assigned is 571-273-8300.

Information regarding the status of an application may be obtained from the Patent Application Information Retrieval (PAIR) system. Status information for published applications may be obtained from either Private PAIR or Public PAIR. Status information for unpublished applications is available through Private PAIR only. For more information about the PAIR system, see http://pair-direct.uspto.gov. Should you have questions on access to the Private PAIR system, contact the Electronic Business Center (EBC) at 866-217-9197 (toll-free). If you would like assistance from a USPTO Customer Service Representative or access to the automated information system, call 800-786-9199 (IN USA OR CANADA) or 571-272-1000.

/AJAY ARORA/
Primary Examiner, Art Unit 2892

Index of Claims	Application/Control No.	Applicant(s)/Patent Under Reexamination
	15/590,282	RAO, G.R. MOHAN
	Examiner	**Art Unit**
	AJAY ARORA	2892

✓	Rejected	-	Cancelled	N	Non-Elected	A	Appeal
=	Allowed	÷	Restricted	I	Interference	O	Objected

CLAIMS

☑ Claims renumbered in the same order as presented by applicant ☐ CPA ☐ T.D. ☐ R.1.47

CLAIM		DATE								
Final	Original	05/13/2019	05/13/2019	10/28/2019						
	1	✓	✓	=						
	2	✓	✓	=						
	3	✓	✓	=						
	4	✓	✓	=						
	5	✓	✓	=						
	6	✓	✓	=						
	7	✓	✓	=						
	8	✓	✓	=						
	9	✓	✓	=						
	10	✓	✓	=						
	11	✓	✓	=						
	12	✓	✓	=						
	13	✓	✓	=						
	14	✓	✓	=						
	15	✓	✓	=						
	16	✓	✓	=						
	17		✓	-						
	18		✓	-						
	19			=						
	20			=						

Greenthread Ex. 2069, p. 41 of 199
Semiconductor v. Greenthread
IPR2023-01242

Issue Classification	Application/Control No.	Applicant(s)/Patent Under Reexamination
	15/590,282	RAO, G.R. MOHAN
	Examiner	**Art Unit**
	AJAY ARORA	2892

CPC

Symbol					Type	Version
H01L	/	29	/	1095	F	2013-01-01
H01L	/	27	/	11524	I	2013-01-01
H01L	/	27	/	14643	I	2013-01-01
H01L	/	27	/	11521	I	2013-01-01
H01L	/	29	/	7395	I	2013-01-01
H01L	/	29	/	36	I	2013-01-01
H01L	/	27	/	0214	A	2013-01-01
H01L	/	27	/	10844	A	2013-01-01

CPC Combination Sets

Symbol					Type	Set	Ranking	Version
	/		/					

NONE (Assistant Examiner)	(Date)	**Total Claims Allowed:** 18	
/AJAY ARORA/ Primary Examiner, Art Unit 2892 (Primary Examiner)	28 October 2019 (Date)	O.G. Print Claim(s) 1	O.G. Print Figure 5B

U.S. Patent and Trademark Office

Part of Paper No.: 20191028

Greenthread Ex. 2069, p. 42 of 199
Semiconductor v. Greenthread
IPR2023-01242

Issue Classification	Application/Control No.	Applicant(s)/Patent Under Reexamination
	15/590,282	RAO, G.R. MOHAN
	Examiner	**Art Unit**
	AJAY ARORA	2892

INTERNATIONAL CLASSIFICATION				
CLAIMED				
H01L	/	21	/	02

NON-CLAIMED				
	/		/	

US ORIGINAL CLASSIFICATION	
CLASS	**SUBCLASS**
257	655

CROSS REFERENCES(S)						
CLASS	**SUBCLASS (ONE SUBCLASS PER BLOCK)**					

NONE (Assistant Examiner) (Date)	**Total Claims Allowed:** 18	
/AJAY ARORA/ Primary Examiner, Art Unit 2892 (Primary Examiner) (Date) 28 October 2019	O.G. Print Claim(s) 1	O.G. Print Figure 5B

U.S. Patent and Trademark Office

Part of Paper No.: 20191028

Greenthread Ex. 2069, p. 43 of 199
Semiconductor v. Greenthread
IPR2023-01242

Issue Classification	Application/Control No.	Applicant(s)/Patent Under Reexamination
	15/590,282	RAO, G.R. MOHAN
	Examiner	**Art Unit**
	AJAY ARORA	2892

☑ Claims renumbered in the same order as presented by applicant ☐ CPA ☐ T.D. ☐ R.1.47

CLAIMS

Final	Original	Final	Original	Final	Original	Final	Original	Final	Original	Final	Original	Final	Original	Final	Original
1	1	10	10	17	19										
2	2	11	11	18	20										
3	3	12	12												
4	4	13	13												
5	5	14	14												
6	6	15	15												
7	7	16	16												
8	8	-	17												
9	9	-	18												

NONE (Assistant Examiner)	(Date)	**Total Claims Allowed:** 18	
/AJAY ARORA/ Primary Examiner, Art Unit 2892 (Primary Examiner)	28 October 2019 (Date)	O.G. Print Claim(s) 1	O.G. Print Figure 5B

U.S. Patent and Trademark Office

Part of Paper No.: 20191028

Greenthread Ex. 2069, p. 44 of 199
Semiconductor v. Greenthread
IPR2023-01242

Search Notes	Application/Control No.	Applicant(s)/Patent Under Reexamination
	15/590,282	RAO, G.R. MOHAN
	Examiner	**Art Unit**
	AJAY ARORA	2892

CPC - Searched*		
Symbol	**Date**	**Examiner**
H01L 29/1095	6/25/2018	AKA

CPC Combination Sets - Searched*		
Symbol	**Date**	**Examiner**

US Classification - Searched*			
Class	**Subclass**	**Date**	**Examiner**
257	655	6/25/2018	AKA

* See search history printout included with this form or the SEARCH NOTES box below to determine the scope of the search.

Search Notes		
Search Notes	**Date**	**Examiner**
Inventor search	6/25/2018	AKA
Assignee search	6/25/2018	AKA
All references for parent applications considered	6/25/2018	AKA
EAST search history report	6/25/2018	AKA
Revised EAST search history report	05/13/2019	AKA
.clm. interference search	10/28/2019	AKA
Revised EAST search history report	10/28/2019	AKA

Interference Search			
US Class/CPC Symbol	**US Subclass/CPC Group**	**Date**	**Examiner**
H01L	29/1095	6/25/2018	AKA
257	655	6/25/2018	AKA

/A.K.A./ Primary Examiner.Art Unit 2892	

Greenthread Ex. 2069, p. 45 of 199
Semiconductor v. Greenthread
IPR2023-01242

Search Notes	Application/Control No.	Applicant(s)/Patent Under Reexamination
	15/590,282	RAO, G.R. MOHAN
	Examiner	**Art Unit**
	AJAY ARORA	2892

/A.K.A./ Primary Examiner.Art Unit 2892	

Greenthread Ex. 2069, p. 46 of 199
Semiconductor v. Greenthread
IPR2023-01242

EAST Search History

EAST Search History (Prior Art)

Ref #	Hits	Search Query	DBs	Default Operator	Plurals	Time Stamp
L2	347	(substrate and (first near3 (dop$3 impurity)) and (second near3 (dop$3 impurity)) and (transistor) and (grad$4 with (dop$3 impurity))).clm.	US-PGPUB; USPAT; USOCR; FPRS; EPO; JPO; DERWENT; IBM_TDB	OR	ON	2019/10/28 13:09
L3	25310	(grad$4 with dop$3)	US-PGPUB; USPAT; USOCR; FPRS; EPO; JPO; DERWENT; IBM_TDB	OR	OFF	2019/10/28 13:27
L4	2624	L3 and (substrate with surface with (first one) with (second other opposi$3)) and transistor	US-PGPUB; USPAT; USOCR; FPRS; EPO; JPO; DERWENT; IBM_TDB	OR	ON	2019/10/28 13:27
S1	1	15/590,282	US-PGPUB; USPAT; USOCR; FPRS; EPO; JPO; DERWENT; IBM_TDB	OR	OFF	2018/06/25 06:54
S2	208	("20020102783" | "20030026126" | "20030030488" | "6211028" | "6310366" | "6753202" | "7115925" | "8164124" | "6878603" | "20020056883" | "20020093281" | "20150200314" | "4347654" | "5496746" | "6452086" | "6737722" | "6747883" | "6780713" | "20030042511" | "5029277" | "5888857" | "6670544" | "6706550" | "6713813" | "6921943" | "7504692" | "20040027753" | "4160985" | "5448087" | "6472715" | "6683343" | "6831292" | "7307327" | "5569612" | "5575862" | "5637898" | "6720622" | "6744117" | "20020134419" | "20060113592" | "20130001661" | "4481522" | "5262345" | "6756616" | "6933215" | "7233044" | "20010040622" | "20020074585" | "5130262" | "5213988" | "5329144" | "6465862" | "6696314" | "RE37441" | "20020084430" | "4001864" | "4866000" | "5480816" | "5517052" | "5797999" | "5973575" | "6754093" | "7064385").PN.	US-PGPUB; USPAT; USOCR; FPRS; EPO; JPO; DERWENT; IBM_TDB	OR	OFF	2018/06/25 06:55

S3	22	((("GREENTHREAD") near3 ("LLC"))).AS,AANM.	US-PGPUB; USPAT; USOCR; FPRS; EPO; JPO; DERWENT; IBM_TDB	OR	OFF	2018/06/25 06:57
S4	23	((("RAO") near3 ("G.R") near3 ("MOHAN"))).INV.	US-PGPUB; USPAT; USOCR; FPRS; EPO; JPO; DERWENT; IBM_TDB	OR	OFF	2018/06/25 06:57
S5	1112	(257/655).CCLS.	US-PGPUB; USPAT; USOCR; FPRS; EPO; JPO; DERWENT; IBM_TDB	OR	OFF	2018/06/25 06:57
S6	19693	h01l29/1095.cpc.	US-PGPUB; USPAT; USOCR; FPRS; EPO; JPO; DERWENT; IBM_TDB	OR	OFF	2018/06/25 06:58
S7	187	("20030030488" | "20020102783" | "20030026126" | "20030030488" | "6211028" | "6310366" | "6753202" | "7115925" | "8164124" | "20020056883" | "20020093281" | "20150200314" | "4347654" | "5496746" | "6452086" | "6737722" | "6747883" | "20030042511" | "5029277" | "5888857" | "6670544" | "6706550" | "6713813" | "6921943" | "20040027753" | "4160985" | "5448087" | "6472715" | "6683343" | "6831292" | "7307327" | "5569612" | "5575862" | "5637898" | "6720622" | "6744117" | "20020134419" | "20060113592" | "20130001661" | "4481522" | "5262345" | "6756616" | "20010040622" | "20020074585" | "5130262" | "5213988" | "5329144" | "6465862" | "6696314" | "RE37441" | "20020084430" | "4001864" | "4866000" | "5480816" | "5517052" | "5797999" | "5973575" | "6754093").PN.	US-PGPUB; USPAT; USOCR; FPRS; EPO; JPO; DERWENT; IBM_TDB	OR	OFF	2018/06/25 06:59
S8	10	("20010040622" | "20030030488" | "4160985").PN.	US-PGPUB; USPAT; USOCR; FPRS; EPO; JPO; DERWENT; IBM_TDB	OR	OFF	2018/06/25 07:00
S9	27	("5448087" | "5888857" | "20030030488" | "6720622" | "20030026126" | "5973575" | "5262345" | "20040027753").PN.	US-PGPUB; USPAT; USOCR; FPRS; EPO; JPO; DERWENT;	OR	OFF	2018/06/25 07:02

			IBM_TDB			
S10	44	("20020056883" | "20020084430" | "20020102783" | "20030042511" | "4160985" | "5637898" | "5517052" | "4481522" | "6831292" | "20020093281" | "5029277" | "20060113592" | "20020134419").PN.	US-PGPUB; USPAT; USOCR; FPRS; EPO; JPO; DERWENT; IBM_TDB	OR	OFF	2018/06/25 07:03
S11	92	("20020074585" | "5496746" | "6683343" | "6696314" | "6452086" | "6472715" | "6747883" | "5797999" | "6670544" | "20040063288" | "4347654" | "4866000" | "6744117" | "6754093" | "5213988" | "5569612" | "RE37441" | "4001864" | "6756616" | "5130262" | "5329144" | "6706550" | "6753202" | "5480816" | "6713813" | "6737722" | "5575862" | "6211028").PN.	US-PGPUB; USPAT; USOCR; FPRS; EPO; JPO; DERWENT; IBM_TDB	OR	OFF	2018/06/25 07:04
S12	189	S7 S8 S9 S10 S11	US-PGPUB; USPAT; USOCR; FPRS; EPO; JPO; DERWENT; IBM_TDB	OR	OFF	2018/06/25 07:05
S13	21	S2 NOT S12	US-PGPUB; USPAT; USOCR; FPRS; EPO; JPO; DERWENT; IBM_TDB	OR	OFF	2018/06/25 07:06
S14	22949	(grad$4 with dop$3)	US-PGPUB; USPAT; USOCR; FPRS; EPO; JPO; DERWENT; IBM_TDB	OR	OFF	2018/06/25 07:09
S15	3307	S14 and (substrate with surface with (first one) with (second other opposi$3))	US-PGPUB; USPAT; USOCR; FPRS; EPO; JPO; DERWENT; IBM_TDB	OR	ON	2018/06/25 07:11
S16	657	S15 and (carrier with surface)	US-PGPUB; USPAT; USOCR; FPRS; EPO; JPO; DERWENT; IBM_TDB	OR	ON	2018/06/25 07:12
S17	1	S12 and S16	US-PGPUB; USPAT; USOCR; FPRS; EPO; JPO; DERWENT; IBM_TDB	OR	ON	2018/06/25 07:12
S18	1	("20070045682").PN.	US-PGPUB;	OR	OFF	2019/05/12

			USPAT			23:27
S19	24	((("GREENTHREAD") near3 ("LLC"))).AS,AANM.	US-PGPUB; USPAT; USOCR; FPRS; EPO; JPO; DERWENT; IBM_TDB	OR	OFF	2019/05/13 10:42
S20	24	((("RAO") near3 ("G.R") near3 ("MOHAN"))).INV.	US-PGPUB; USPAT; USOCR; FPRS; EPO; JPO; DERWENT; IBM_TDB	OR	OFF	2019/05/13 10:42
S21	41	S19 S20	US-PGPUB; USPAT; USOCR; FPRS; EPO; JPO; DERWENT; IBM_TDB	OR	ON	2019/05/13 10:42
S22	8	(substrate and (first near3 (dop$3 impurity)) and (second near3 (dop$3 impurity)) and (active near2 circuit$2) and (grad$4 with (dop$3 impurity))).clm.	US-PGPUB; USPAT; USOCR; FPRS; EPO; JPO; DERWENT; IBM_TDB	OR	ON	2019/05/13 10:44

10/28/2019 2:15:21 PM
C:\Users\aarora\Documents\EAST\Workspaces\15590282.wsp

Bibliographic Data

Application No: 15/590,282

Foreign Priority claimed: ○ Yes ◉ No

35 USC 119 (a-d) conditions met: ☐ Yes ☑ No ☐ Met After Allowance

Verified and Acknowledged: /AJAY ARORA/ (Examiner's Signature) [ ] (Initials)

Title: SEMICONDUCTOR DEVICES WITH GRADED DOPANT REGIONS

FILING or 371(c) DATE	CLASS	GROUP ART UNIT	ATTORNEY DOCKET NO.
05/09/2017	257	2892	GRTD60-33439
RULE			

APPLICANTS

GREENTHREAD, LLC, DALLAS, TX, UNITED STATES

INVENTORS

G.R. MOHAN RAO ALLEN, TX, UNITED STATES

CONTINUING DATA

This application is a CON of 14931636 11/03/2015 PAT 9647070

14931636 is a CON of 14515584 10/16/2014 PAT 9190502

14515584 is a CON of 13854319 04/01/2013ABN

13854319 is a CON of 11622496 01/12/2007 PAT 8421195

11622496 is a DIV of 10934915 09/03/2004ABN

FOREIGN APPLICATIONS

IF REQUIRED, FOREIGN LICENSE GRANTED**

05/16/2017

**** SMALL ENTITY ****

STATE OR COUNTRY

UNITED STATES

ADDRESS

MUNCK WILSON MANDALA L.L.P
P.O. Drawer 800889
DALLAS, TX 75380
UNITED STATES

FILING FEE RECEIVED

$730

PTO/SB/30EFS (02-18)
Approved for use through 11/30/2020. OMB 0651-0031
U.S. Patent and Trademark Office; U.S. DEPARTMENT OF COMMERCE
Under the Paperwork Reduction Act of 1995, no persons are required to respond to a collection of information unless it contains a valid OMB control number.

REQUEST FOR CONTINUED EXAMINATION(RCE)TRANSMITTAL
(Submitted Only via EFS-Web)

Application Number	15590282	Filing Date	2017-05-09	Docket Number (if applicable)	GRTD60-33439	Art Unit	2892
First Named Inventor	G.R. Mohan Rao			Examiner Name	Arora, Ajay		

This is a Request for Continued Examination (RCE) under 37 CFR 1.114 of the above-identified application.
Request for Continued Examination (RCE) practice under 37 CFR 1.114 does not apply to any utility or plant application filed prior to June 8, 1995, or to any design application. The Instruction Sheet for this form is located at WWW.USPTO.GOV

SUBMISSION REQUIRED UNDER 37 CFR 1.114

Note: If the RCE is proper, any previously filed unentered amendments and amendments enclosed with the RCE will be entered in the order in which they were filed unless applicant instructs otherwise. If applicant does not wish to have any previously filed unentered amendment(s) entered, applicant must request non-entry of such amendment(s).

☒ Previously submitted. If a final Office action is outstanding, any amendments filed after the final Office action may be considered as a submission even if this box is not checked.

- ☐ Consider the arguments in the Appeal Brief or Reply Brief previously filed on _____
- ☐ Other _____

☐ Enclosed

- ☐ Amendment/Reply
- ☐ Information Disclosure Statement (IDS)
- ☐ Affidavit(s)/ Declaration(s)
- ☐ Other _____

MISCELLANEOUS

☐ Suspension of action on the above-identified application is requested under 37 CFR 1.103(c) for a period of months _____
(Period of suspension shall not exceed 3 months; Fee under 37 CFR 1.17(i) required)

☐ Other _____

FEES

The RCE fee under 37 CFR 1.17(e) is required by 37 CFR 1.114 when the RCE is filed.
☒ The Director is hereby authorized to charge any underpayment of fees, or credit any overpayments, to Deposit Account No _____

SIGNATURE OF APPLICANT, ATTORNEY, OR AGENT REQUIRED

X Patent Practitioner Signature
Applicant Signature

PTO/SB/30EFS (02-18)
Approved for use through 11/30/2020. OMB 0651-0031
U.S. Patent and Trademark Office; U.S. DEPARTMENT OF COMMERCE
Under the Paperwork Reduction Act of 1995, no persons are required to respond to a collection of information unless it contains a valid OMB control number.

Signature of Registered U.S. Patent Practitioner			
Signature	/Bill R. Naifeh, Reg No. 44962/	Date (YYYY-MM-DD)	2019-10-09
Name	Bill R. Naifeh	Registration Number	44962

This collection of information is required by 37 CFR 1.114. The information is required to obtain or retain a benefit by the public which is to file (and by the USPTO to process) an application. Confidentiality is governed by 35 U.S.C. 122 and 37 CFR 1.11 and 1.14. This collection is estimated to take 12 minutes to complete, including gathering, preparing, and submitting the completed application form to the USPTO. Time will vary depending upon the individual case. Any comments on the amount of time you require to complete this form and/or suggestions for reducing this burden, should be sent to the Chief Information Officer, U.S. Patent and Trademark Office, U.S. Department of Commerce, P.O. Box 1450, Alexandria, VA 22313-1450.

If you need assistance in completing the form, call 1-800-PTO-9199 and select option 2.

Privacy Act Statement

The Privacy Act of 1974 (P.L. 93-579) requires that you be given certain information in connection with your submission of the attached form related to a patent application or patent. Accordingly, pursuant to the requirements of the Act, please be advised that: (1) the general authority for the collection of this information is 35 U.S.C. 2(b)(2); (2) furnishing of the information solicited is voluntary; and (3) the principal purpose for which the information is used by the U.S. Patent and Trademark Office is to process and/or examine your submission related to a patent application or patent. If you do not furnish the requested information, the U.S. Patent and Trademark Office may not be able to process and/or examine your submission, which may result in termination of proceedings or abandonment of the application or expiration of the patent.

The information provided by you in this form will be subject to the following routine uses:

1. The information on this form will be treated confidentially to the extent allowed under the Freedom of Information Act (5 U.S.C. 552) and the Privacy Act (5 U.S.C. 552a). Records from this system of records may be disclosed to the Department of Justice to determine whether the Freedom of Information Act requires disclosure of these records.

2. A record from this system of records may be disclosed, as a routine use, in the course of presenting evidence to a court, magistrate, or administrative tribunal, including disclosures to opposing counsel in the course of settlement negotiations.

3. A record in this system of records may be disclosed, as a routine use, to a Member of Congress submitting a request involving an individual, to whom the record pertains, when the individual has requested assistance from the Member with respect to the subject matter of the record.

4. A record in this system of records may be disclosed, as a routine use, to a contractor of the Agency having need for the information in order to perform a contract. Recipients of information shall be required to comply with the requirements of the Privacy Act of 1974, as amended, pursuant to 5 U.S.C. 552a(m).

5. A record related to an International Application filed under the Patent Cooperation Treaty in this system of records may be disclosed, as a routine use, to the International Bureau of the World Intellectual Property Organization, pursuant to the Patent Cooperation Treaty.

6. A record in this system of records may be disclosed, as a routine use, to another federal agency for purposes of National Security review (35 U.S.C. 181) and for review pursuant to the Atomic Energy Act (42 U.S.C. 218(c)).

7. A record from this system of records may be disclosed, as a routine use, to the Administrator, General Services, or his/her designee, during an inspection of records conducted by GSA as part of that agency's responsibility to recommend improvements in records management practices and programs, under authority of 44 U.S.C. 2904 and 2906. Such disclosure shall be made in accordance with the GSA regulations governing inspection of records for this purpose, and any other relevant (i.e., GSA or Commerce) directive. Such disclosure shall not be used to make determinations about individuals.

8. A record from this system of records may be disclosed, as a routine use, to the public after either publication of the application pursuant to 35 U.S.C. 122(b) or issuance of a patent pursuant to 35 U.S.C. 151. Further, a record may be disclosed, subject to the limitations of 37 CFR 1.14, as a routine use, to the public if the record was filed in an application which became abandoned or in which the proceedings were terminated and which application is referenced by either a published application, an application open to public inspections or an issued patent.

9. A record from this system of records may be disclosed, as a routine use, to a Federal, State, or local law enforcement agency, if the USPTO becomes aware of a violation or potential violation of law or regulation.

PTO/AIA/22 (03-13)
Approved for use through 11/30/2020. OMB 0651-0031
U.S. Patent and Trademark Office; U.S. DEPARTMENT OF COMMERCE
Under the Paperwork Reduction Act of 1995, no persons are required to respond to a collection of information unless it displays a valid OMB control number.

PETITION FOR EXTENSION OF TIME UNDER 37 CFR 1.136(a)

Docket Number (Optional): GRTD60-33439

Application Number: 15/590,282

Filed: 2017-05-09

For: SEMICONDUCTOR DEVICES WITH GRADED DOPANT REGIONS

Art Unit: 2892

Examiner: Arora, Ajay

This is a request under the provisions of 37 CFR 1.136(a) to extend the period for filing a reply in the above-identified application.

The requested extension and fee are as follows (check time period desired and enter the appropriate fee below):

		Fee	Small Entity Fee	Micro Entity Fee	
☑	One month (37 CFR 1.17(a)(1))	$200	$100	$50	$ 100
☐	Two months (37 CFR 1.17(a)(2))	$600	$300	$150	$
☐	Three months (37 CFR 1.17(a)(3))	$1,400	$700	$350	$
☐	Four months (37 CFR 1.17(a)(4))	$2,200	$1,100	$550	$
☐	Five months (37 CFR 1.17(a)(5))	$3,000	$1,500	$750	$

☑ Applicant asserts small entity status. See 37 CFR 1.27.

☐ Applicant certifies micro entity status. See 37 CFR 1.29.
Form PTO/SB/15A or B or equivalent must either be enclosed or have been submitted previously.

☐ A check in the amount of the fee is enclosed.

☐ Payment by credit card. Form PTO-2038 is attached.

☐ The Director has already been authorized to charge fees in this application to a Deposit Account.

☐ The Director is hereby authorized to charge any fees which may be required, or credit any overpayment, to Deposit Account Number _____.

☑ Payment made via EFS-Web.

WARNING: Information on this form may become public. Credit card information should not be included on this form. Provide credit card information and authorization on PTO-2038.

I am the

☐ applicant.

☐ attorney or agent of record. Registration number _____.

☑ attorney or agent acting under 37 CFR 1.34. Registration number 44,962.

/Bill R. Naifeh, Reg No. 44962/
Signature

2019-10-09
Date

Bill R. Naifeh
Typed or printed name

972-726-9500
Telephone Number

NOTE: This form must be signed in accordance with 37 CFR 1.33. See 37 CFR 1.4 for signature requirements and certifications. Submit multiple forms if more than one signature is required, see below*.

☑ * Total of 1 forms are submitted.

This collection of information is required by 37 CFR 1.136(a). The information is required to obtain or retain a benefit by the public, which is to file (and by the USPTO to process) an application. Confidentiality is governed by 35 U.S.C. 122 and 37 CFR 1.11 and 1.14. This collection is estimated to take 6 minutes to complete, including gathering, preparing, and submitting the completed application form to the USPTO. Time will vary depending upon the individual case. Any comments on the amount of time you require to complete this form and/or suggestions for reducing this burden should be sent to the Chief Information Officer, U.S. Patent and Trademark Office, U.S. Department of Commerce, P.O. Box 1450, Alexandria, VA 22313-1450. DO NOT SEND FEES OR COMPLETED FORMS TO THIS ADDRESS. SEND TO: Mail Stop PCT, Commissioner for Patents, P.O. Box 1450, Alexandria, VA 22313-1450.

Privacy Act Statement

The **Privacy Act of 1974 (P.L. 93-579)** requires that you be given certain information in connection with your submission of the attached form related to a patent application or patent. Accordingly, pursuant to the requirements of the Act, please be advised that: (1) the general authority for the collection of this information is 35 U.S.C. 2(b)(2); (2) furnishing of the information solicited is voluntary; and (3) the principal purpose for which the information is used by the U.S. Patent and Trademark Office is to process and/or examine your submission related to a patent application or patent. If you do not furnish the requested information, the U.S. Patent and Trademark Office may not be able to process and/or examine your submission, which may result in termination of proceedings or abandonment of the application or expiration of the patent.

The information provided by you in this form will be subject to the following routine uses:

1. The information on this form will be treated confidentially to the extent allowed under the Freedom of Information Act (5 U.S.C. 552) and the Privacy Act (5 U.S.C 552a). Records from this system of records may be disclosed to the Department of Justice to determine whether disclosure of these records is required by the Freedom of Information Act.
2. A record from this system of records may be disclosed, as a routine use, in the course of presenting evidence to a court, magistrate, or administrative tribunal, including disclosures to opposing counsel in the course of settlement negotiations.
3. A record in this system of records may be disclosed, as a routine use, to a Member of Congress submitting a request involving an individual, to whom the record pertains, when the individual has requested assistance from the Member with respect to the subject matter of the record.
4. A record in this system of records may be disclosed, as a routine use, to a contractor of the Agency having need for the information in order to perform a contract. Recipients of information shall be required to comply with the requirements of the Privacy Act of 1974, as amended, pursuant to 5 U.S.C. 552a(m).
5. A record related to an International Application filed under the Patent Cooperation Treaty in this system of records may be disclosed, as a routine use, to the International Bureau of the World Intellectual Property Organization, pursuant to the Patent Cooperation Treaty.
6. A record in this system of records may be disclosed, as a routine use, to another federal agency for purposes of National Security review (35 U.S.C. 181) and for review pursuant to the Atomic Energy Act (42 U.S.C. 218(c)).
7. A record from this system of records may be disclosed, as a routine use, to the Administrator, General Services, or his/her designee, during an inspection of records conducted by GSA as part of that agency's responsibility to recommend improvements in records management practices and programs, under authority of 44 U.S.C. 2904 and 2906. Such disclosure shall be made in accordance with the GSA regulations governing inspection of records for this purpose, and any other relevant (*i.e.*, GSA or Commerce) directive. Such disclosure shall not be used to make determinations about individuals.
8. A record from this system of records may be disclosed, as a routine use, to the public after either publication of the application pursuant to 35 U.S.C. 122(b) or issuance of a patent pursuant to 35 U.S.C. 151. Further, a record may be disclosed, subject to the limitations of 37 CFR 1.14, as a routine use, to the public if the record was filed in an application which became abandoned or in which the proceedings were terminated and which application is referenced by either a published application, an application open to public inspection or an issued patent.
9. A record from this system of records may be disclosed, as a routine use, to a Federal, State, or local law enforcement agency, if the USPTO becomes aware of a violation or potential violation of law or regulation.

Electronic Patent Application Fee Transmittal

Application Number:	15590282
Filing Date:	09-May-2017
Title of Invention:	SEMICONDUCTOR DEVICES WITH GRADED DOPANT REGIONS
First Named Inventor/Applicant Name:	G.R. MOHAN RAO
Filer:	Bill Naifeh/April Reasoner
Attorney Docket Number:	GRTD60-33439

Filed as Small Entity

Filing Fees for Utility under 35 USC 111(a)

Description	Fee Code	Quantity	Amount	Sub-Total in USD($)
Basic Filing:				
Pages:				
Claims:				
Miscellaneous-Filing:				
Petition:				
Patent-Appeals-and-Interference:				
Post-Allowance-and-Post-Issuance:				
Extension-of-Time:				

Description	Fee Code	Quantity	Amount	Sub-Total in USD($)
Extension - 1 month with $0 paid	2251	1	100	100
Miscellaneous:				
RCE- 1ST REQUEST	2801	1	650	650
		Total in USD ($)		**750**

Electronic Acknowledgement Receipt

EFS ID:	37412614
Application Number:	15590282
International Application Number:	
Confirmation Number:	1032
Title of Invention:	SEMICONDUCTOR DEVICES WITH GRADED DOPANT REGIONS
First Named Inventor/Applicant Name:	G.R. MOHAN RAO
Customer Number:	25883
Filer:	Bill Naifeh/April Reasoner
Filer Authorized By:	Bill Naifeh
Attorney Docket Number:	GRTD60-33439
Receipt Date:	09-OCT-2019
Filing Date:	09-MAY-2017
Time Stamp:	16:36:06
Application Type:	Utility under 35 USC 111(a)

Payment information:

Submitted with Payment	yes
Payment Type	CARD
Payment was successfully received in RAM	$750
RAM confirmation Number	E201909G36330357
Deposit Account	
Authorized User	

The Director of the USPTO is hereby authorized to charge indicated fees and credit any overpayment as follows:

File Listing:

Document Number	Document Description	File Name	File Size(Bytes)/ Message Digest	Multi Part /.zip	Pages (if appl.)
1	Request for Continued Examination (RCE)	RCE.pdf	1349888 f871f9926356e960b321b41248745e1df61ea1dd	no	3
Warnings:					
Information:					
2	Extension of Time	EOT.pdf	157589 6e7d72d3aa816684bb021eb6a4d4532d1c318583	no	2
Warnings:					
Information:					
3	Fee Worksheet (SB06)	fee-info.pdf	32401 ad3a7a144a8b45e2e370d17c8b63a58335182b81	no	2
Warnings:					
Information:					
			Total Files Size (in bytes):	1539878	

This Acknowledgement Receipt evidences receipt on the noted date by the USPTO of the indicated documents, characterized by the applicant, and including page counts, where applicable. It serves as evidence of receipt similar to a Post Card, as described in MPEP 503.

<u>New Applications Under 35 U.S.C. 111</u>
If a new application is being filed and the application includes the necessary components for a filing date (see 37 CFR 1.53(b)-(d) and MPEP 506), a Filing Receipt (37 CFR 1.54) will be issued in due course and the date shown on this Acknowledgement Receipt will establish the filing date of the application.
<u>National Stage of an International Application under 35 U.S.C. 371</u>
If a timely submission to enter the national stage of an international application is compliant with the conditions of 35 U.S.C. 371 and other applicable requirements a Form PCT/DO/EO/903 indicating acceptance of the application as a national stage submission under 35 U.S.C. 371 will be issued in addition to the Filing Receipt, in due course.
<u>New International Application Filed with the USPTO as a Receiving Office</u>
If a new international application is being filed and the international application includes the necessary components for an international filing date (see PCT Article 11 and MPEP 1810), a Notification of the International Application Number and of the International Filing Date (Form PCT/RO/105) will be issued in due course, subject to prescriptions concerning national security, and the date shown on this Acknowledgement Receipt will establish the international filing date of the application.

PTO/SB/06 (09-11)
Approved for use through 1/31/2014. OMB 0651-0032
U.S. Patent and Trademark Office; U.S. DEPARTMENT OF COMMERCE
Under the Paperwork Reduction Act of 1995, no persons are required to respond to a collection of information unless it displays a valid OMB control number.

PATENT APPLICATION FEE DETERMINATION RECORD Substitute for Form PTO-875	Application or Docket Number 15/590,282	Filing Date 05/09/2017	☐ To be Mailed

ENTITY: ☐ LARGE ☑ SMALL ☐ MICRO

APPLICATION AS FILED - PART I

FOR	(Column 1) NUMBER FILED	(Column 2) NUMBER EXTRA		RATE ($)	FEE ($)
☐ BASIC FEE (37 CFR 1.16(a), (b), or (c))	N/A	N/A		N/A	
☐ SEARCH FEE (37 CFR 1.16(k), (i), or (m))	N/A	N/A		N/A	
☐ EXAMINATION FEE (37 CFR 1.16(o), (p), or (q))	N/A	N/A		N/A	
TOTAL CLAIMS (37 CFR 1.16(i))	minus 20 =	*		x $40 =	
INDEPENDENT CLAIMS (37 CFR 1.16(h))	minus 3 =	*		x $210 =	
☐ APPLICATION SIZE FEE (37 CFR 1.16(s))	If the specification and drawings exceed 100 sheets of paper, the application size fee due is $310 ($155 for small entity) for each additional 50 sheets or fraction thereof. See 35 U.S.C. 41(a)(1)(G) and 37 CFR 1.16(s).				
☐ MULTIPLE DEPENDENT CLAIM PRESENT (37 CFR 1.16(j))					
* If the difference in column 1 is less than zero, enter "0" in column 2.				TOTAL	

APPLICATION AS AMENDED - PART II

AMENDMENT	10/09/2019	(Column 1) CLAIMS REMAINING AFTER AMENDMENT		(Column 2) HIGHEST NUMBER PREVIOUSLY PAID FOR	(Column 3) PRESENT EXTRA		RATE ($)	ADDITIONAL FEE ($)
	Total (37 CFR 1.16(i))	* 18	Minus	** 20	= 0		x $50 =	0
	Independent (37 CFR 1.16(h))	* 2	Minus	*** 3	= 0		x $230 =	0
	☐ Application Size Fee (37 CFR 1.16(s))							
	☐ FIRST PRESENTATION OF MULTIPLE DEPENDENT CLAIM (37 CFR 1.16(j))							
							TOTAL ADD'L FEE	0

AMENDMENT		(Column 1) CLAIMS REMAINING AFTER AMENDMENT		(Column 2) HIGHEST NUMBER PREVIOUSLY PAID FOR	(Column 3) PRESENT EXTRA		RATE ($)	ADDITIONAL FEE ($)
	Total (37 CFR 1.16(i))	*	Minus	**	=		x $0 =	
	Independent (37 CFR 1.16(h))	*	Minus	***	=		x $0 =	
	☐ Application Size Fee (37 CFR 1.16(s))							
	☐ FIRST PRESENTATION OF MULTIPLE DEPENDENT CLAIM (37 CFR 1.16(j))							
							TOTAL ADD'L FEE	

* If the entry in column 1 is less than the entry in column 2, write "0" in column 3.	LIE
** If the "Highest Number Previously Paid For" IN THIS SPACE is less than 20, enter "20".	/AMANDA N FORD/
*** If the "Highest Number Previously Paid For" IN THIS SPACE is less than 3, enter "3".	
The "Highest Number Previously Paid For" (Total or Independent) is the highest number found in the appropriate box in column 1.	

This collection of information is required by 37 CFR 1.16. The information is required to obtain or retain a benefit by the public which is to file (and by the USPTO to process) an application. Confidentiality is governed by 35 U.S.C. 122 and 37 CFR 1.14. This collection is estimated to take 12 minutes to complete, including gathering, preparing, and submitting the completed application form to the USPTO. Time will vary depending upon the individual case. Any comments on the amount of time you require to complete this form and/or suggestions for reducing this burden, should be sent to the Chief Information Officer, U.S. Patent and Trademark Office, U.S. Department of Commerce, P.O. Box 1450, Alexandria, VA 22313-1450. DO NOT SEND FEES OR COMPLETED FORMS TO THIS ADDRESS. **SEND TO: Commissioner for Patents, P.O. Box 1450, Alexandria, VA 22313-1450.**

If you need assistance in completing the form, call 1-800-PTO-9199 and select option 2.

UNITED STATES PATENT AND TRADEMARK OFFICE

UNITED STATES DEPARTMENT OF COMMERCE
United States Patent and Trademark Office
Address: COMMISSIONER FOR PATENTS
P.O. Box 1450
Alexandria, Virginia 22313-1450
www.uspto.gov

APPLICATION NO.	FILING DATE	FIRST NAMED INVENTOR	ATTORNEY DOCKET NO.	CONFIRMATION NO.
15/590,282	05/09/2017	G.R. MOHAN RAO	GRTD60-33439	1032

25883 7590 09/27/2019
MUNCK WILSON MANDALA L.L.P
P.O. Drawer 800889
DALLAS, TX 75380

EXAMINER
ARORA, AJAY

ART UNIT	PAPER NUMBER
2892	

NOTIFICATION DATE	DELIVERY MODE
09/27/2019	ELECTRONIC

Please find below and/or attached an Office communication concerning this application or proceeding.

The time period for reply, if any, is set in the attached communication.

Notice of the Office communication was sent electronically on above-indicated "Notification Date" to the following e-mail address(es):

IPdocketing@munckwilson.com
admin@dalpat.com
eofficeaction@appcoll.com

Advisory Action Before the Filing of an Appeal Brief	Application No. 15/590,282	Applicant(s) RAO, G.R. MOHAN	
	Examiner AJAY ARORA	Art Unit 2892	AIA (FITF) Status No

--The MAILING DATE of this communication appears on the cover sheet with the correspondence address --

THE REPLY FILED 16 September 2019 FAILS TO PLACE THIS APPLICATION IN CONDITION FOR ALLOWANCE.

NO NOTICE OF APPEAL FILED

1. ☑ The reply was filed after a final rejection. No Notice of Appeal has been filed. To avoid abandonment of this application, applicant must timely file one of the following replies: (1) an amendment, affidavit, or other evidence, which places the application in condition for allowance; (2) a Notice of Appeal (with appeal fee) in compliance with 37 CFR 41.31; or (3) a Request for Continued Examination (RCE) in compliance with 37 CFR 1.114 if this is a utility or plant application. Note that RCEs are not permitted in design applications. The reply must be filed within one of the following time periods:
   a) ☑ The period for reply expires 4 months from the mailing date of the final rejection.
   b) ☐ The period for reply expires on: (1) the mailing date of this Advisory Action; or (2) the date set forth in the final rejection, whichever is later. In no event, however, will the statutory period for reply expire later than SIX MONTHS from the mailing date of the final rejection.
   c) ☐ A prior Advisory Action was mailed more than 3 months after the mailing date of the final rejection in response to a first after-final reply filed within 2 months of the mailing date of the final rejection.The current period for reply expires ____ months from the mailing date of *the prior Advisory Action* or SIX MONTHS from the mailing date of the final rejection, whichever is earlier.
   Examiner Note: If box 1 is checked, check either box (a), (b) or (c). ONLY CHECK BOX (b) WHEN THIS ADVISORY ACTION IS THE FIRST RESPONSE TO APPLICANTS FIRST AFTER-FINAL REPLY WHICH WAS FILED WITHIN TWO MONTHS OF THE FINAL REJECTION. ONLY CHECK BOX (c) IN THE LIMITED SITUATION SET FORTH UNDER BOX (c). See MPEP 706.07(f).

Extensions of time may be obtained under 37 CFR 1.136(a). The date on which the petition under 37 CFR 1.136(a) and the appropriate extension fee have been filed is the date for purposes of determining the period of extension and the corresponding amount of the fee. The appropriate extension fee under 37 CFR 1.17(a) is calculated from: (1) the expiration date of the shortened statutory period for reply originally set in the final Office action; or (2) as set forth in (b) or (c) above, if checked. Any reply received by the Office later than three months after the mailing date of the final rejection, even if timely filed, may reduce any earned patent term adjustment. See 37 CFR 1.704(b).

NOTICE OF APPEAL

2. ☐ The Notice of Appeal was filed on _____. A brief in compliance with 37 CFR 41.37 must be filed within two months of the date of filing the Notice of Appeal (37 CFR 41.37(a)), or any extension thereof (37 CFR 41.37(e)), to avoid dismissal of the appeal. Since a Notice of Appeal has been filed, any reply must be filed within the time period set forth in 37CFR 41.37(a).

AMENDMENTS

3. ☑ The proposed amendments filed after a final rejection, but prior to the date of filing a brief, will not be entered because
   a) ☑ They raise new issues that would require further consideration and/or search (see NOTE below);
   b) ☐ They raise the issue of new matter (see NOTE below);
   c) ☐ They are not deemed to place the application in better form for appeal by materially reducing or simplifying the issues for appeal; and/or
   d) ☐ They present additional claims without canceling a corresponding number of finally rejected claims.
   NOTE: See Continuation Sheet (See 37CFR 1.116 and 41.33(a)).
4. ☐ The amendments are not in compliance with 37CFR 1.121. See attached Notice of Non-Compliant Amendment (PTOL-324).
5. ☐ Applicants reply has overcome the following rejection(s): _____
6. ☐ Newly proposed or amended claim(s) _____ would be allowable if submitted in a separate, timely filed amendment canceling the non-allowable claim(s).
7. ☐ For purposes of appeal, the proposed amendment(s):(a)☐will not be entered, or (b)☐will be entered, and an explanation of how the new or amended claims would be rejected is provided below or appended.

AFFIDAVIT OR OTHER EVIDENCE

8. ☐ A declaration(s)/affidavit(s) under **37 CFR 1.130(b)** was/were filed on _____
9. ☐ The affidavit or other evidence filed after final action, but before or on the date of filing a Notice of Appeal will not be entered because applicant failed to provide a showing of good and sufficient reasons why the affidavit or other evidence is necessary and was not earlier presented. See 37 CFR 1.116(e).
10. ☐ The affidavit or other evidence filed after the date of filing the Notice of Appeal, but prior to the date of filing a brief, will not be entered because the affidavit or other evidence failed to overcome all rejections under appeal and/or appellant fails to provide a showing of good and sufficient reasons why it is necessary and was not earlier presented. See 37 CFR 41.33(d)(1).
11. ☐ The affidavit or other evidence is entered. An explanation of the status of the claims after entry is below or attached.

REQUEST FOR RECONSIDERATION/OTHER

12. ☑ The request for reconsideration has been considered but does NOT place the application in condition for allowance because: See Continuation Sheet.
13. ☐ Note the attached Information *Disclosure Statement*(s). (PTO/SB/08) Paper No(s). _____
14. ☐ Other: _____.

STATUS OF CLAIMS

15. The status of the claim(s) is (or will be) as follows:
    Claim(s) allowed:_____.
    Claim(s) objected to:_____.
    Claim(s) rejected:1-18.
    Claim(s) withdrawn from consideration:_____.

/AJAY ARORA/ Primary Examiner, Art Unit 2892	

Continuation of 3. NOTE: The new limitation that requires previously recited "circuitry" to more specifically be "transistors" raises new issues that would require further consideration and/or search

Continuation of REQUEST FOR RECONSIDERATION/OTHER 12. The request for reconsideration has been considered but does NOT place the application in condition for allowance because: Applicant's arguments are based on the currently proposed ammendments, which are not being entered. As explained in the response to arguments on page 6 of office action of 5/16/2019, the base claim 1 did not previously provide a recitation that active region necessarily needed to have transistors - just circuitry. The proposed amendment (from "circuitry" to "transistor") does overcome the current rejection of record but given the change in scope of the claim at this stage, the amendment is not being entered at this after final stage and will require further consideration and/or search.

DO NOT ENTER: /A.A/

GRTD.01.01.DV5 PATENT

IN THE UNITED STATES PATENT AND TRADEMARK OFFICE

In re application of:	RAO, G.R. Mohan
Serial No.:	15/590,282
Confirmation No.:	1032
Filed:	May 9, 2017
Group:	2892
Examiner:	ARORA, Ajay
For:	SEMICONDUCTOR DEVICES WITH GRADED DOPANT REGIONS

Mail Stop AMENDMENT
Commissioner for Patents
P.O. Box 1450
Alexandria, VA 22313-1450

Dear Sir:

AMENDMENT AFTER FINAL AND RESPONSE TO OFFICE ACTION

This communication is responsive to the Examiner's Office Action dated May 16, 2019. Reconsideration is respectfully requested.

Amendments to the Claims are reflected in the listing of claims beginning on page 2 of this paper.

Remarks/Arguments begin on page 5 of this paper.

PTO/AIA/22 (03-13)
Approved for use through 11/30/2020. OMB 0651-0031
U.S. Patent and Trademark Office; U.S. DEPARTMENT OF COMMERCE
Under the Paperwork Reduction Act of 1995, no persons are required to respond to a collection of information unless it displays a valid OMB control number.

PETITION FOR EXTENSION OF TIME UNDER 37 CFR 1.136(a)

Docket Number (Optional): GRTD.01.01.DV5

Application Number: 15/590,282

Filed: May 9, 2017

For: SEMICONDUCTOR DEVICES WITH GRADED DOPANT REGIONS

Art Unit: 2892

Examiner: ARORA, Ajay

This is a request under the provisions of 37 CFR 1.136(a) to extend the period for filing a reply in the above-identified application.

The requested extension and fee are as follows (check time period desired and enter the appropriate fee below):

		Fee	Small Entity Fee	Micro Entity Fee	
☑	One month (37 CFR 1.17(a)(1))	$200	$100	$50	$ 100
☐	Two months (37 CFR 1.17(a)(2))	$600	$300	$150	$
☐	Three months (37 CFR 1.17(a)(3))	$1,400	$700	$350	$
☐	Four months (37 CFR 1.17(a)(4))	$2,200	$1,100	$550	$
☐	Five months (37 CFR 1.17(a)(5))	$3,000	$1,500	$750	$

☑ Applicant asserts small entity status. See 37 CFR 1.27.

☐ Applicant certifies micro entity status. See 37 CFR 1.29.
Form PTO/SB/15A or B or equivalent must either be enclosed or have been submitted previously.

☐ A check in the amount of the fee is enclosed.

☐ Payment by credit card. Form PTO-2038 is attached.

☐ The Director has already been authorized to charge fees in this application to a Deposit Account.

☐ The Director is hereby authorized to charge any fees which may be required, or credit any overpayment, to Deposit Account Number _____.

☑ Payment made via EFS-Web.

WARNING: Information on this form may become public. Credit card information should not be included on this form. Provide credit card information and authorization on PTO-2038.

I am the

☐ applicant.

☑ attorney or agent of record. Registration number 44,962.

☐ attorney or agent acting under 37 CFR 1.34. Registration number _____.

Signature	September 16, 2019 Date
Bill R. Naifeh Typed or printed name	972-726-9500 Telephone Number

NOTE: This form must be signed in accordance with 37 CFR 1.33. See 37 CFR 1.4 for signature requirements and certifications. Submit multiple forms if more than one signature is required, see below*.

☐ * Total of _____ forms are submitted.

This collection of information is required by 37 CFR 1.136(a). The information is required to obtain or retain a benefit by the public, which is to file (and by the USPTO to process) an application. Confidentiality is governed by 35 U.S.C. 122 and 37 CFR 1.11 and 1.14. This collection is estimated to take 6 minutes to complete, including gathering, preparing, and submitting the completed application form to the USPTO. Time will vary depending upon the individual case. Any comments on the amount of time you require to complete this form and/or suggestions for reducing this burden should be sent to the Chief Information Officer, U.S. Patent and Trademark Office, U.S. Department of Commerce, P.O. Box 1450, Alexandria, VA 22313-1450. DO NOT SEND FEES OR COMPLETED FORMS TO THIS ADDRESS. SEND TO: Mail Stop PCT, Commissioner for Patents, P.O. Box 1450, Alexandria, VA 22313-1450.

Privacy Act Statement

The **Privacy Act of 1974 (P.L. 93-579)** requires that you be given certain information in connection with your submission of the attached form related to a patent application or patent. Accordingly, pursuant to the requirements of the Act, please be advised that: (1) the general authority for the collection of this information is 35 U.S.C. 2(b)(2); (2) furnishing of the information solicited is voluntary; and (3) the principal purpose for which the information is used by the U.S. Patent and Trademark Office is to process and/or examine your submission related to a patent application or patent. If you do not furnish the requested information, the U.S. Patent and Trademark Office may not be able to process and/or examine your submission, which may result in termination of proceedings or abandonment of the application or expiration of the patent.

The information provided by you in this form will be subject to the following routine uses:

1. The information on this form will be treated confidentially to the extent allowed under the Freedom of Information Act (5 U.S.C. 552) and the Privacy Act (5 U.S.C 552a). Records from this system of records may be disclosed to the Department of Justice to determine whether disclosure of these records is required by the Freedom of Information Act.
2. A record from this system of records may be disclosed, as a routine use, in the course of presenting evidence to a court, magistrate, or administrative tribunal, including disclosures to opposing counsel in the course of settlement negotiations.
3. A record in this system of records may be disclosed, as a routine use, to a Member of Congress submitting a request involving an individual, to whom the record pertains, when the individual has requested assistance from the Member with respect to the subject matter of the record.
4. A record in this system of records may be disclosed, as a routine use, to a contractor of the Agency having need for the information in order to perform a contract. Recipients of information shall be required to comply with the requirements of the Privacy Act of 1974, as amended, pursuant to 5 U.S.C. 552a(m).
5. A record related to an International Application filed under the Patent Cooperation Treaty in this system of records may be disclosed, as a routine use, to the International Bureau of the World Intellectual Property Organization, pursuant to the Patent Cooperation Treaty.
6. A record in this system of records may be disclosed, as a routine use, to another federal agency for purposes of National Security review (35 U.S.C. 181) and for review pursuant to the Atomic Energy Act (42 U.S.C. 218(c)).
7. A record from this system of records may be disclosed, as a routine use, to the Administrator, General Services, or his/her designee, during an inspection of records conducted by GSA as part of that agency's responsibility to recommend improvements in records management practices and programs, under authority of 44 U.S.C. 2904 and 2906. Such disclosure shall be made in accordance with the GSA regulations governing inspection of records for this purpose, and any other relevant (*i.e.*, GSA or Commerce) directive. Such disclosure shall not be used to make determinations about individuals.
8. A record from this system of records may be disclosed, as a routine use, to the public after either publication of the application pursuant to 35 U.S.C. 122(b) or issuance of a patent pursuant to 35 U.S.C. 151. Further, a record may be disclosed, subject to the limitations of 37 CFR 1.14, as a routine use, to the public if the record was filed in an application which became abandoned or in which the proceedings were terminated and which application is referenced by either a published application, an application open to public inspection or an issued patent.
9. A record from this system of records may be disclosed, as a routine use, to a Federal, State, or local law enforcement agency, if the USPTO becomes aware of a violation or potential violation of law or regulation.

Electronic Patent Application Fee Transmittal

Application Number:	15590282
Filing Date:	09-May-2017
Title of Invention:	SEMICONDUCTOR DEVICES WITH GRADED DOPANT REGIONS
First Named Inventor/Applicant Name:	G.R. MOHAN RAO
Filer:	Bill Naifeh
Attorney Docket Number:	GRTD60-33439

Filed as Small Entity

Filing Fees for **Utility under 35 USC 111(a)**

Description	Fee Code	Quantity	Amount	Sub-Total in USD($)
Basic Filing:				
Pages:				
Claims:				
Miscellaneous-Filing:				
Petition:				
Patent-Appeals-and-Interference:				
Post-Allowance-and-Post-Issuance:				
Extension-of-Time:				

Description	Fee Code	Quantity	Amount	Sub-Total in USD($)
Extension - 1 month with $0 paid	2251	1	100	100
Miscellaneous:				
			Total in USD ($)	**100**

Electronic Acknowledgement Receipt

EFS ID:	37180277
Application Number:	15590282
International Application Number:	
Confirmation Number:	1032
Title of Invention:	SEMICONDUCTOR DEVICES WITH GRADED DOPANT REGIONS
First Named Inventor/Applicant Name:	G.R. MOHAN RAO
Customer Number:	25883
Filer:	Bill Naifeh
Filer Authorized By:	
Attorney Docket Number:	GRTD60-33439
Receipt Date:	16-SEP-2019
Filing Date:	09-MAY-2017
Time Stamp:	19:29:40
Application Type:	Utility under 35 USC 111(a)

Payment information:

Submitted with Payment	yes
Payment Type	CARD
Payment was successfully received in RAM	$100
RAM confirmation Number	E20199FJ30410404
Deposit Account	
Authorized User	

The Director of the USPTO is hereby authorized to charge indicated fees and credit any overpayment as follows:

File Listing:

Document Number	Document Description	File Name	File Size(Bytes)/ Message Digest	Multi Part /.zip	Pages (if appl.)
1	Extension of Time	ExtensionRequest.pdf	152335 442ca222dd5ac62df3553d41c394a4b8663ca833	no	2
Warnings:					
Information:					
2	Applicant Arguments/Remarks Made in an Amendment	Response.pdf	165286 f962fc39a9491f02b7e03d60b4ea88f6bfd2c2fc	no	9
Warnings:					
Information:					
3	Fee Worksheet (SB06)	fee-info.pdf	30615 9c2364ed444b7cfa6c82d9f3f43737532060 46d9	no	2
Warnings:					
Information:					
			Total Files Size (in bytes):	348236	

This Acknowledgement Receipt evidences receipt on the noted date by the USPTO of the indicated documents, characterized by the applicant, and including page counts, where applicable. It serves as evidence of receipt similar to a Post Card, as described in MPEP 503.

<u>New Applications Under 35 U.S.C. 111</u>
If a new application is being filed and the application includes the necessary components for a filing date (see 37 CFR 1.53(b)-(d) and MPEP 506), a Filing Receipt (37 CFR 1.54) will be issued in due course and the date shown on this Acknowledgement Receipt will establish the filing date of the application.
<u>National Stage of an International Application under 35 U.S.C. 371</u>
If a timely submission to enter the national stage of an international application is compliant with the conditions of 35 U.S.C. 371 and other applicable requirements a Form PCT/DO/EO/903 indicating acceptance of the application as a national stage submission under 35 U.S.C. 371 will be issued in addition to the Filing Receipt, in due course.
<u>New International Application Filed with the USPTO as a Receiving Office</u>
If a new international application is being filed and the international application includes the necessary components for an international filing date (see PCT Article 11 and MPEP 1810), a Notification of the International Application Number and of the International Filing Date (Form PCT/RO/105) will be issued in due course, subject to prescriptions concerning national security, and the date shown on this Acknowledgement Receipt will establish the international filing date of the application.

IN THE UNITED STATES PATENT AND TRADEMARK OFFICE

In re application of:	RAO, G.R. Mohan
Serial No.:	15/590,282
Confirmation No.:	1032
Filed:	May 9, 2017
Group:	2892
Examiner:	ARORA, Ajay
For:	SEMICONDUCTOR DEVICES WITH GRADED DOPANT REGIONS

Mail Stop AMENDMENT
Commissioner for Patents
P.O. Box 1450
Alexandria, VA 22313-1450

Dear Sir:

AMENDMENT AFTER FINAL AND RESPONSE TO OFFICE ACTION

This communication is responsive to the Examiner's Office Action dated May 16, 2019. Reconsideration is respectfully requested.

Amendments to the Claims are reflected in the listing of claims beginning on page 2 of this paper.

Remarks/Arguments begin on page 5 of this paper.

In the Claims

This listing of claims will replace all prior versions, and listings, of claims in the application:

1. (Currently Amended) A semiconductor device, comprising:

a substrate of a first doping type at a first doping level having first and second surfaces;

a first active region disposed adjacent the first surface of the substrate with a second doping type opposite in conductivity to the first doping type and within which ~~circuitry~~ transistors can be formed;

a second active region separate from the first active region disposed adjacent to the first active region and within which transistors ~~circuitry~~ can be formed;

~~circuitry~~ transistors formed in at least one of the first active region or second active region; and

at least a portion of at least one of the first and second active regions having at least one graded dopant concentration to aid carrier movement from the first surface to the second surface of the substrate.

2. (Original) The semiconductor device of Claim 1, wherein the substrate is a p-type substrate.

3. (Original) The semiconductor device of Claim 1, wherein the substrate is an n-type substrate.

4. (Original) The semiconductor device of Claim 1, wherein the substrate has epitaxial silicon on top of a nonepitaxial substrate.

5. (Currently Amended) The semiconductor device of Claim 1, wherein the first active region and second active region contain one of either p-channel and n-channel devices.

6. (Currently amended) The semiconductor device of Claim 1, wherein the first active region and second active region contain either p-channel or n-channel devices in n-wells or p-wells, respectively, and each well has a graded dopant.

7. (Original) The semiconductor device of Claim 1, wherein the first active region and second active region are each separated by at least one isolation region.

8. (Original) The semiconductor device of Claim 1, wherein the graded dopant is fabricated with an ion implantation process.

9. (Currently Amended) A semiconductor device, comprising:

a substrate of a first doping type at a first doping level having first and second surfaces;

a first active region disposed adjacent the first surface of the substrate with a second doping type opposite in conductivity to the first doping type and within which ~~circuitry~~ transistors can be formed in the surface thereof;

a second active region separate from the first active region disposed adjacent to the first active region and within which ~~circuitry~~ transistors can be formed in the surface thereof;

~~circuitry~~ transistors formed in at least one of the first active region or second active region; and

at least a portion of at least one of the first and second active regions having at least one graded dopant concentration to aid carrier movement from the surface to the substrate.

10. (Original) The semiconductor device of Claim 9, wherein the substrate is a p-type substrate.

11. (Original) The semiconductor device of Claim 9, wherein the substrate is an n-type substrate.

12. (Original) The semiconductor device of Claim 9, wherein the substrate has epitaxial silicon on top of a nonepitaxial substrate.

13. (Currently Amended) The semiconductor device of Claim 9, wherein the first active region and second active region contain <u>at least one of either</u> p-channel and n-channel devices.

14. (Currently amended) The semiconductor device of Claim 9, wherein the first active region and second active region contain either p-channel or n-channel devices <u>in n-wells or p-wells, respectively, and each well has a graded dopant</u>.

15. (Original) The semiconductor device of Claim 9, wherein the first active region and second active region are each separated by at least one isolation region.

16. (Original) The semiconductor device of Claim 9, wherein the graded dopant is fabricated with an ion implantation process.

17. (Cancelled)

18. (Cancelled)

19. (New) The semiconductor device of Claim 1, wherein the first and second active regions are formed adjacent the first surface of the substrate.

20. (New) The semiconductor device of Claim 1, wherein the transistors which can be formed in the first and second active regions are CMOS transistors requiring a source, a drain, a gate and a channel region.

REMARKS

Applicant has carefully reviewed the Office Action dated July 17, 2018. Applicant has amended claims 1, 5, 6, 9, 13, and 14, cancelled claims 17 and 18, and added new claims 19 and 20. Reconsideration and favorable action is respectfully requested.

Claims 1 – 16 stand rejected under 35 USC §103(a) as being anticipated by *Hong*. This rejection is respectfully traversed with respect to the claims as currently presented.

A basic misunderstanding between how the claims are drafted and how the Examiner is interpreting them is with respect to the term "active region." This will be discussed in detail.

With respect to the *Hong* reference, the primary figure, Figure 4D is reproduced as follows:

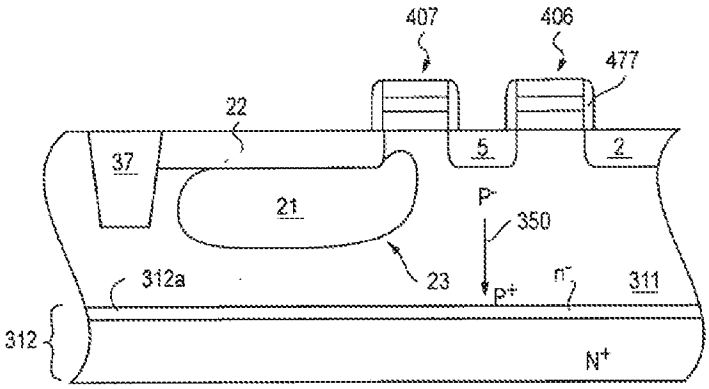

FIG. 4D

This figure depicts the final construction at formation of the various doped regions. The description of this construction is as follows for the Examiner's convenience:

> As shown in FIG. 4D, the n-type region 21 is formed from a point adjacent the transfer gate stack 407 and extending in the epitaxial layer 311 between the gate stack 407 and the isolation region 37. The region 21 forms a photosensitive charge accumulating region for collecting photo-generated charge.

> The doped surface layer 22 for the photo-conversion device 23 is implanted and formed as a highly doped p-type surface layer. A p-type dopant, such as boron, indium, or any other suitable p-type dopant, may be used to form the p-type surface layer 22. The p-type surface layer 22 may be formed by known techniques. For example, layer 22 may be formed by implanting p-type ions through openings in a layer of photoresist. Alternatively, layer 22 may be formed by a gas source plasma doping process, or by diffusing a p-type dopant into the epitaxial layer 311 from an in-situ doped layer or a doped oxide layer deposited over the area where layer 22 is to be formed.
>
> The floating diffusion region 5 and source/drain region 2 are implanted by known methods, as also shown in FIG. 4D. The floating diffusion region 5 and source/drain region 2 are formed as n-type regions. Any suitable n-type dopant, such as phosphorus, arsenic, or antimony, may be used. The floating diffusion region 5 is formed on the side of the transfer gate stack 407 opposite the n-type photodiode region 21. The source/drain region 2 is formed on a side of the reset gate stack 406 opposite the floating diffusion region 5.
>
> Conventional processing methods can be used to form other structures of the pixel cell 300. For example, insulating, shielding, and metallization layers to connect gate lines, and other connections to the pixel cell 300 may be formed. Also, the entire surface may be covered with a passivation layer (not shown) of, for example, silicon dioxide, borosilicate glass (BSG), phosphosilicate glass (PSG), or borophosphosilicate glass (BPSG), which is CMP planarized and etched to provide contact holes, which are then metallized to provide contacts. Conventional layers of conductors and insulators may also be used to interconnect the structures and to connect pixel 300 to peripheral circuitry. (¶ ¶ 0038-0041).

From this description, it can be clearly seen that the region 2 is a source/drain region and it is formed similarly with the region 5 referred to as a floating diffusion region. Both of the stacks 407 and 406 are referred to as "gate stacks." These are basically the gates of the transistors. Underneath the transistor gates is formed a channel region. The region 22 is referred to merely as a P-type surface layer. The doping range of this layer is not set forth. However, the structure formed by the region 22, region 21 and the region 311 forms a P-N-P photodiode. Thus, the question is - what is an active region?

The Examiner has referred to the first active region as the region 311, but has referred to the regions 21, 22, 5 and 2 as "wells." As discussed in the prior Response, there is no support for such a construction, as the term "wells" in semiconductor technology typically refers to a region formed in a substrate within which active components are formed. The Examiner has referred to

the second active region as being that defined by the source/drain region 2 or the regions 2 or 5 or 22 of the pixel cell. Applicant had previously amended the claims to define the "active regions" as regions within which transistors can be formed and the current amendments set forth that "circuitry" is now "transistors" formed in at least one of the active regions. This is a clear distinction, as a well 2 or 5 cannot have a transistor formed therein. The operation of the structure in Hong is set forth in ¶ 0007 as follows:

> In the CMOS pixel cell 10 depicted in FIGS. 1 and 2, electrons are generated by light incident on the photo-conversion device 23 and are stored in the n-type photodiode region 21. These charges are transferred to the floating diffusion region 5 by the transfer transistor 17 when the transfer transistor 17 is activated. The source follower transistor 19 produces an output signal based on the transferred charges applied to its gate. A maximum output signal is proportional to the number of electrons extracted from the n-type photodiode region 21.

Thus, as discussed in the previous Response, the trapped charges are stored in the region 21, and all the region 22 does is provide a contact with one side of the channel under the transfer transistor/stack 17 to allow charge to be transferred from the photodiode region 21 to the floating diffusion region 5 when transfer transistor/stack 17 is activated and the underlying channel is conductive. Thus, there is provided only a "single" active region 311 within which two transistors are formed with the transistor gate stacks 407 and 406 and their associated source/drain regions. The actual source for the transistor stack 407 is the N-type region 21 which is connected to the channel underlying the gate stack 407 by the P-type region 22. There are no transistors formed within the region 22 or the region 5 or the region 2 - the transistors are formed only within the "single" active region 311.

With respect to claims 5 and 6 requiring transistors to be formed of a specific conductivity type, the Examiner referred to Hong as follows on Page 5 of the current Office Action:

> Regarding claims 5-6, Hong (refer to Figures 4A-40 and 5A-5C) teaches that the first active region and second active region may contain contain [sic] p-channel or n-channel devices (see Figure 40 and para 42) and further teaches that different configuration of device(s) are possible (para 42-43). It would have been obvious to one of ordinary skills in the art at the time of the invention to modify Hong so

that the first active region and second active region "contain p-channel and n-channel devices" (as recited in claim 5); or "contain either p-channel or n-channel devices. The ordinary artisan would have been motivated to modify Hong for at least the purpose of Motivation: at least for the purpose of forming image sensors where either p-channel device or n-channel devices are used; or a combination of such devices is used to design the circuit for maximum electrical efficiency for the given design requirements.

The Examiner is relying on Paragraphs [0042] and [0043] for support, which paragraphs state as follows:

[0042] While the above embodiments are described in connection with the formation of p-n-p-type photodiodes the invention is not limited to these embodiments. The invention also has applicability to other types of photo-conversion devices, such as a photodiode formed from n-p or n-p-n regions in a substrate, a photogate, or a photoconductor. If an n-p-n-type photodiode is formed the dopant and conductivity types of all structures would change accordingly. Specifically, the substrate 312 would be p-type and the epitaxial layer 311 would be n-type.

[0043] Although the above embodiments are described in connection with a 4T pixel cell 300, the configuration of pixel cell 300 is only exemplary and the invention may also be incorporated into other pixel circuits having different numbers of transistors. Without being limiting, such a circuit may include a three-transistor (3T) pixel cell, a five-transistor (5T) pixel cell, a six-transistor (6T) pixel cell, or a seven-transistor pixel cell (7T). A 3T cell often omits the transfer transistor, and may have a reset transistor adjacent to a photodiode. The 5T, 6T, and 7T pixel cells differ from the 4T pixel cell by the addition of one, two, or three transistors, respectively, such as a shutter transistor, a CMOS photogate transistor, and an anti-blooming transistor. Further, while the above embodiments are described in connection with a CMOS pixel cell 300 the invention is also applicable to pixel cells in a charge coupled device (CCD) image sensor.

This describes nothing more that the different switch transistors that can be utilized for the transistor gate stacks 406 and 407. The structure:

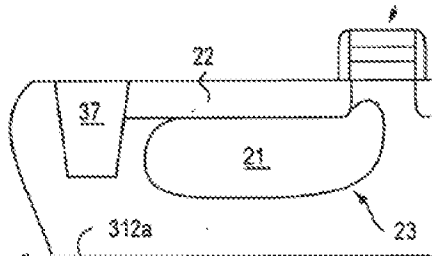

only sets forth a structure with an N-Type region 21 and a heavily doped P-Type region 22 disposed adjacent to and above. This is a diode construction and there is no discussion in Hong that a transistor of any type can or could be formed in the active region 21.

Applicant believes that *Hong* does not anticipate or obviate pending claims 1 – 16, 19, and 20 as currently presented, and therefore respectfully requests withdrawal of the 35 USC §103(a) rejection with respect thereto. Applicant has now made an earnest attempt in order to place this case in condition for allowance. For the reasons stated above, Applicant respectfully requests full allowance of the claims as amended.

If any issues arise, or if the Examiner has any suggestions for expediting allowance of this Application, the Applicant respectfully invites the Examiner to contact the undersigned at the telephone number indicated below or at tim@naifeh.com.

Recognizing that Internet communications are not secure, Applicant hereby authorizes the USPTO to communicate with the undersigned and practitioners in accordance with 37 CFR 1.33 and 37 CFR 1.34 concerning any subject matter of this application by video conferencing, instant messaging, or electronic mail. Applicant understands that a copy of these communications will be made of record in the application file.

Respectfully submitted,
Attorneys for Applicant

/Bill R. Naifeh, Reg. No. 44,962/

Bill R. Naifeh
Registration No. 44,962

Bill R. Naifeh
Law Office of Naifeh | Bliss
15303 Dallas Parkway
Suite 700
Addison, TX 75001
972-726-9500
214-550-2542 (fax)

PTO/SB/06 (09-11)
Approved for use through 1/31/2014. OMB 0651-0032
U.S. Patent and Trademark Office; U.S. DEPARTMENT OF COMMERCE
Under the Paperwork Reduction Act of 1995, no persons are required to respond to a collection of information unless it displays a valid OMB control number.

PATENT APPLICATION FEE DETERMINATION RECORD Substitute for Form PTO-875	Application or Docket Number 15/590,282	Filing Date 05/09/2017	☐ To be Mailed

ENTITY: ☐ LARGE ☑ SMALL ☐ MICRO

APPLICATION AS FILED - PART I

FOR	(Column 1) NUMBER FILED	(Column 2) NUMBER EXTRA		RATE ($)	FEE ($)
☐ BASIC FEE (37 CFR 1.16(a), (b), or (c))	N/A	N/A		N/A	
☐ SEARCH FEE (37 CFR 1.16(k), (i), or (m))	N/A	N/A		N/A	
☐ EXAMINATION FEE (37 CFR 1.16(o), (p), or (q))	N/A	N/A		N/A	
TOTAL CLAIMS (37 CFR 1.16(i))	minus 20 =	*		x $40 =	
INDEPENDENT CLAIMS (37 CFR 1.16(h))	minus 3 =	*		x $210 =	
☐ APPLICATION SIZE FEE (37 CFR 1.16(s))	If the specification and drawings exceed 100 sheets of paper, the application size fee due is $310 ($155 for small entity) for each additional 50 sheets or fraction thereof. See 35 U.S.C. 41(a)(1)(G) and 37 CFR 1.16(s).				
☐ MULTIPLE DEPENDENT CLAIM PRESENT (37 CFR 1.16(j))					
* If the difference in column 1 is less than zero, enter "0" in column 2.				TOTAL	

APPLICATION AS AMENDED - PART II

AMENDMENT	09/16/2019	(Column 1) CLAIMS REMAINING AFTER AMENDMENT		(Column 2) HIGHEST NUMBER PREVIOUSLY PAID FOR	(Column 3) PRESENT EXTRA		RATE ($)	ADDITIONAL FEE ($)
	Total (37 CFR 1.16(i))	* 18	Minus	** 20	= 0		x $50 =	0
	Independent (37 CFR 1.16(h))	* 2	Minus	*** 3	= 0		x $230 =	0
	☐ Application Size Fee (37 CFR 1.16(s))							
	☐ FIRST PRESENTATION OF MULTIPLE DEPENDENT CLAIM (37 CFR 1.16(j))							
							TOTAL ADD'L FEE	0

AMENDMENT		(Column 1) CLAIMS REMAINING AFTER AMENDMENT		(Column 2) HIGHEST NUMBER PREVIOUSLY PAID FOR	(Column 3) PRESENT EXTRA		RATE ($)	ADDITIONAL FEE ($)
	Total (37 CFR 1.16(i))	*	Minus	**	=		x $0 =	
	Independent (37 CFR 1.16(h))	*	Minus	***	=		x $0 =	
	☐ Application Size Fee (37 CFR 1.16(s))							
	☐ FIRST PRESENTATION OF MULTIPLE DEPENDENT CLAIM (37 CFR 1.16(j))							
							TOTAL ADD'L FEE	

* If the entry in column 1 is less than the entry in column 2, write "0" in column 3.	LIE
** If the "Highest Number Previously Paid For" IN THIS SPACE is less than 20, enter "20".	/RENEE D HAWKINS/
*** If the "Highest Number Previously Paid For" IN THIS SPACE is less than 3, enter "3".	
The "Highest Number Previously Paid For" (Total or Independent) is the highest number found in the appropriate box in column 1.	

This collection of information is required by 37 CFR 1.16. The information is required to obtain or retain a benefit by the public which is to file (and by the USPTO to process) an application. Confidentiality is governed by 35 U.S.C. 122 and 37 CFR 1.14. This collection is estimated to take 12 minutes to complete, including gathering, preparing, and submitting the completed application form to the USPTO. Time will vary depending upon the individual case. Any comments on the amount of time you require to complete this form and/or suggestions for reducing this burden, should be sent to the Chief Information Officer, U.S. Patent and Trademark Office, U.S. Department of Commerce, P.O. Box 1450, Alexandria, VA 22313-1450. DO NOT SEND FEES OR COMPLETED FORMS TO THIS ADDRESS. **SEND TO: Commissioner for Patents, P.O. Box 1450, Alexandria, VA 22313-1450.**

If you need assistance in completing the form, call 1-800-PTO-9199 and select option 2.

PTO/SB/06 (09-11)
Approved for use through 1/31/2014. OMB 0651-0032
U.S. Patent and Trademark Office; U.S. DEPARTMENT OF COMMERCE
Under the Paperwork Reduction Act of 1995, no persons are required to respond to a collection of information unless it displays a valid OMB control number.

PATENT APPLICATION FEE DETERMINATION RECORD Substitute for Form PTO-875	Application or Docket Number 15/590,282	Filing Date 05/09/2017	☐ To be Mailed

ENTITY: ☐ LARGE ☑ SMALL ☐ MICRO

APPLICATION AS FILED - PART I

FOR	(Column 1) NUMBER FILED	(Column 2) NUMBER EXTRA		RATE ($)	FEE ($)
☐ BASIC FEE (37 CFR 1.16(a), (b), or (c))	N/A	N/A		N/A	
☐ SEARCH FEE (37 CFR 1.16(k), (i), or (m))	N/A	N/A		N/A	
☐ EXAMINATION FEE (37 CFR 1.16(o), (p), or (q))	N/A	N/A		N/A	
TOTAL CLAIMS (37 CFR 1.16(i))	minus 20 =	*		x $40 =	
INDEPENDENT CLAIMS (37 CFR 1.16(h))	minus 3 =	*		x $210 =	
☐ APPLICATION SIZE FEE (37 CFR 1.16(s))	If the specification and drawings exceed 100 sheets of paper, the application size fee due is $310 ($155 for small entity) for each additional 50 sheets or fraction thereof. See 35 U.S.C. 41(a)(1)(G) and 37 CFR 1.16(s).				
☐ MULTIPLE DEPENDENT CLAIM PRESENT (37 CFR 1.16(j))					
* If the difference in column 1 is less than zero, enter "0" in column 2.				TOTAL	

APPLICATION AS AMENDED - PART II

AMENDMENT	09/16/2019	(Column 1) CLAIMS REMAINING AFTER AMENDMENT		(Column 2) HIGHEST NUMBER PREVIOUSLY PAID FOR	(Column 3) PRESENT EXTRA		RATE ($)	ADDITIONAL FEE ($)
	Total (37 CFR 1.16(i))	* 18	Minus	** 20	= 0		x $50 =	0
	Independent (37 CFR 1.16(h))	* 2	Minus	*** 3	= 0		x $230 =	0
	☐ Application Size Fee (37 CFR 1.16(s))							
	☐ FIRST PRESENTATION OF MULTIPLE DEPENDENT CLAIM (37 CFR 1.16(j))							
							TOTAL ADD'L FEE	0

AMENDMENT		(Column 1) CLAIMS REMAINING AFTER AMENDMENT		(Column 2) HIGHEST NUMBER PREVIOUSLY PAID FOR	(Column 3) PRESENT EXTRA		RATE ($)	ADDITIONAL FEE ($)
	Total (37 CFR 1.16(i))	*	Minus	**	=		x $0 =	
	Independent (37 CFR 1.16(h))	*	Minus	***	=		x $0 =	
	☐ Application Size Fee (37 CFR 1.16(s))							
	☐ FIRST PRESENTATION OF MULTIPLE DEPENDENT CLAIM (37 CFR 1.16(j))							
							TOTAL ADD'L FEE	

* If the entry in column 1 is less than the entry in column 2, write "0" in column 3.	LIE
** If the "Highest Number Previously Paid For" IN THIS SPACE is less than 20, enter "20".	/TAMMY D MCBETH BROWN/
*** If the "Highest Number Previously Paid For" IN THIS SPACE is less than 3, enter "3".	
The "Highest Number Previously Paid For" (Total or Independent) is the highest number found in the appropriate box in column 1.	

This collection of information is required by 37 CFR 1.16. The information is required to obtain or retain a benefit by the public which is to file (and by the USPTO to process) an application. Confidentiality is governed by 35 U.S.C. 122 and 37 CFR 1.14. This collection is estimated to take 12 minutes to complete, including gathering, preparing, and submitting the completed application form to the USPTO. Time will vary depending upon the individual case. Any comments on the amount of time you require to complete this form and/or suggestions for reducing this burden, should be sent to the Chief Information Officer, U.S. Patent and Trademark Office, U.S. Department of Commerce, P.O. Box 1450, Alexandria, VA 22313-1450. DO NOT SEND FEES OR COMPLETED FORMS TO THIS ADDRESS. **SEND TO: Commissioner for Patents, P.O. Box 1450, Alexandria, VA 22313-1450.**

If you need assistance in completing the form, call 1-800-PTO-9199 and select option 2.

UNITED STATES PATENT AND TRADEMARK OFFICE

UNITED STATES DEPARTMENT OF COMMERCE
United States Patent and Trademark Office
Address: COMMISSIONER FOR PATENTS
P.O. Box 1450
Alexandria, Virginia 22313-1450
www.uspto.gov

APPLICATION NO.	FILING DATE	FIRST NAMED INVENTOR	ATTORNEY DOCKET NO.	CONFIRMATION NO.
15/590,282	05/09/2017	G.R. MOHAN RAO	GRTD-33439	1032

25883 7590 05/16/2019
MUNCK WILSON MANDALA L.L.P
P.O. Drawer 800889
DALLAS, TX 75380

EXAMINER
ARORA, AJAY

ART UNIT	PAPER NUMBER
2892	

NOTIFICATION DATE	DELIVERY MODE
05/16/2019	ELECTRONIC

Please find below and/or attached an Office communication concerning this application or proceeding.

The time period for reply, if any, is set in the attached communication.

Notice of the Office communication was sent electronically on above-indicated "Notification Date" to the following e-mail address(es):

IPdocketing@munckwilson.com
admin@dalpat.com
eofficeaction@appcoll.com

Office Action Summary	Application No. 15/590,282	Applicant(s) RAO, G.R. MOHAN	
	Examiner AJAY ARORA	Art Unit 2892	AIA (FITF) Status No

-- The MAILING DATE of this communication appears on the cover sheet with the correspondence address --

Period for Reply

A SHORTENED STATUTORY PERIOD FOR REPLY IS SET TO EXPIRE 3 MONTHS FROM THE MAILING DATE OF THIS COMMUNICATION.

- Extensions of time may be available under the provisions of 37 CFR 1.136(a). In no event, however, may a reply be timely filed after SIX (6) MONTHS from the mailing date of this communication.
- If NO period for reply is specified above, the maximum statutory period will apply and will expire SIX (6) MONTHS from the mailing date of this communication.
- Failure to reply within the set or extended period for reply will, by statute, cause the application to become ABANDONED (35 U.S.C. § 133). Any reply received by the Office later than three months after the mailing date of this communication, even if timely filed, may reduce any earned patent term adjustment. See 37 CFR 1.704(b).

Status

1)☑ Responsive to communication(s) filed on 1/16/2019.

☐ A declaration(s)/affidavit(s) under **37 CFR 1.130(b)** was/were filed on _____.

2a)☑ This action is **FINAL.** 2b) ☐ This action is non-final.

3)☐ An election was made by the applicant in response to a restriction requirement set forth during the interview on _____; the restriction requirement and election have been incorporated into this action.

4)☐ Since this application is in condition for allowance except for formal matters, prosecution as to the merits is closed in accordance with the practice under *Ex parte Quayle*, 1935 C.D. 11, 453 O.G. 213.

Disposition of Claims*

5) ☑ Claim(s) 1-18 is/are pending in the application.

5a) Of the above claim(s) _____ is/are withdrawn from consideration.

6) ☐ Claim(s) _____ is/are allowed.

7) ☑ Claim(s) 1-18 is/are rejected.

8) ☐ Claim(s) _____ is/are objected to.

9) ☐ Claim(s) _____ are subject to restriction and/or election requirement

* If any claims have been determined allowable, you may be eligible to benefit from the **Patent Prosecution Highway** program at a participating intellectual property office for the corresponding application. For more information, please see http://www.uspto.gov/patents/init_events/pph/index.jsp or send an inquiry to **PPHfeedback@uspto.gov.**

Application Papers

10)☐ The specification is objected to by the Examiner.

11)☐ The drawing(s) filed on _____ is/are: a)☐ accepted or b)☐ objected to by the Examiner.

Applicant may not request that any objection to the drawing(s) be held in abeyance. See 37 CFR 1.85(a).

Replacement drawing sheet(s) including the correction is required if the drawing(s) is objected to. See 37 CFR 1.121(d).

Priority under 35 U.S.C. § 119

12)☐ Acknowledgment is made of a claim for foreign priority under 35 U.S.C. § 119(a)-(d) or (f).

Certified copies:

a)☐ All b)☐ Some** c)☐ None of the:

1.☐ Certified copies of the priority documents have been received.

2.☐ Certified copies of the priority documents have been received in Application No. _____.

3.☐ Copies of the certified copies of the priority documents have been received in this National Stage application from the International Bureau (PCT Rule 17.2(a)).

** See the attached detailed Office action for a list of the certified copies not received.

Attachment(s)

1) ☐ Notice of References Cited (PTO-892)

2) ☐ Information Disclosure Statement(s) (PTO/SB/08a and/or PTO/SB/08b) Paper No(s)/Mail Date _____.

3) ☐ Interview Summary (PTO-413) Paper No(s)/Mail Date _____.

4) ☐ Other: _____.

DETAILED ACTION

Notice of Pre-AIA or AIA Status

1. The present application is being examined under the pre-AIA first to invent provisions.

Claim Objections

2. Newly added claims 17 and 18 are objected to because of the following informalities: Each of claims 17 and 18 recite "the circuitry includes active devices" but their respective base claims (1 and 9) each recite "circuitry" that corresponds to "first active region" and also "circuitry" that corresponds to "second active region". As such, it is not clear which of the two "circuitry" is being referred to in the recitation "the circuitry" of claims 17 and 18. For the purposes of this office action, it will be assumed that it can refer to any one of the circuitry. Appropriate correction is required.

Claim Rejections - 35 USC § 103

3. The following is a quotation of pre-AIA 35 U.S.C. 103(a) which forms the basis for all obviousness rejections set forth in this Office action:

> (a) A patent may not be obtained though the invention is not identically disclosed or described as set forth in section 102 of this title, if the differences between the subject matter sought to be patented and the prior art are such that the subject matter as a whole would have been obvious at the time the invention was made to a person having ordinary skill in the art to which said subject matter pertains. Patentability shall not be negatived by the manner in which the invention was made.

4. Claims 1-18 are rejected under pre-AIA 35 U.S.C. 103(a) as being unpatentable over Hong (US 2007/0045682) of prior record, hereinafter Hong.

Regarding claims 1 and 17, Hong (refer to Figures 4A-4D and 5A-5C) teaches a semiconductor device, comprising:

a substrate (312 – see para 29) of a first doping type (i.e. parts 312 and 21 of the substrate have n-type doping, see para 29) at a first doping level having first and second surfaces;

a first active region (311, which includes wells such as 21, 22, 5, 2) disposed adjacent the first surface of the substrate with a second doping type opposite in conductivity to the first doping type (i.e. p-type, see para 29) and within which circuitry (comprising pixel cell 300 described in para 28, including transistors corresponding to 407 or 406 – see para 32) can be formed, wherein (as recited in claim 17) the circuitry includes active devices (i.e. active devices corresponding to pixel described above);

a second active region (such as source/drain region 2, see para 40; or 2 or 5 or 22 of pixel cell formed in an adjacent region separated by shallow trench isolation 37 – see para 30) separate from the first active region disposed adjacent to the first active region and within which circuitry (note that circuitry is a very broad term and does not necessarily imply presence of active elements like transistors, and any device terminals such as source/drain read on “circuitry”; also see claim objection to claim 17 which as recited, does not require “active devices” in both “first active region” and “second active region”) can be formed;

circuitry (comprising pixel cell 300 described in para 28, including transistors corresponding to 407 or 406 – see para 32) formed in at least one of the first active region or second active region; and

at least a portion of at least one of the first and second active regions having at least one graded dopant concentration (350 – see para 24, last 3 sentences; also see Figure 5C and para 29) to aid carrier movement (para 26).

Hong does not specifically state that the aiding of carrier movement is “from the first surface to the second surface of the substrate”. However, Hong teaches that although a p-n-p photodiode is shown formed in Figure 4D, other photodiode types may be formed (para 42); and that gradients different from those shown in examples of Figure 5A-5C may be used (para 24, especially last sentence). It would have been obvious to one of ordinary skills in the art at the time of the invention to modify Hong so that the aiding of carrier movement is “from the first surface to the second surface of the substrate”. The ordinary artisan would have been motivated to modify Hong for at least the purpose of using a gradient suitable for a photo-conversion device (23 of Figure 4D, see para 26) in which at least a part that collects carriers is aided by the gradient, for example as case where said part is formed in or extends into the substrate, or when vertical devices are formed.

Regarding claims 2-3, Hong (refer to Figures 4A-4D and 5A-5C) teaches that the substrate (312) may be a p-type substrate (para 42), as recited in claim 2; or may be an n-type substrate (see Figure 4D), as recited in claim 3.

Regarding claim 4, Hong (refer to Figures 4A-4D and 5A-5C) teaches that the substrate (312) has epitaxial silicon on top of a nonepitaxial substrate (para 19 describes that the term “substrate” includes silicon-on-insulator, which includes epitaxial silicon on top of a nonepitaxial substrate).

Regarding claims 5-6, Hong (refer to Figures 4A-4D and 5A-5C) teaches that the first active region and second active region may contain contain p-channel or n-channel devices (see Figure 4D and para 42) and further teaches that different configuration of device(s) are possible (para 42-43). It would have been obvious to one of ordinary skills in the art at the time of the invention to modify Hong so that the first active region and second active region “contain p-channel and n-channel devices” (as recited in claim 5); or “contain either p-channel or n-channel devices. The ordinary artisan would have been motivated to modify Hong for at least the purpose of Motivation: at least for the purpose of forming image sensors where either p-channel device or n-channel devices are used; or a combination of such devices is used to design the circuit for maximum electrical efficiency for the given design requirements.

Regarding claim 7, Hong (refer to Figures 4A-4D and 5A-5C) teaches that the first active region and second active region may each separated by at least one isolation region (37, as explained for claim 1).

Regarding claim 8, it is a product claim but recites a method of steps therein; i.e. the graded dopant is “fabricated with an ion implantation process”. Therefore, the claim amounts to a product by process claim. *"Even though product-by-process claims are limited by and defined by the process, determination of patentability is based on the*

product itself. The patentability of a product does not depend on its method of production. If the product in the product-by-process claim is the same as or obvious from a product of the prior art, the claim is unpatentable even though the prior product was made by a different process." In re Thorpe, 777 F.2d 695, 698, 227 USPQ 964, 966 (Fed. Cir. 1985). See MPEP 2113.

Claim 9 is substantially similar to claim 1 – instead of the limitation "from the first surface to the second surface of the substrate" of claim 1, claim 9 instead recites "from the surface to the substrate". As such, the rejection of claim 1 also applies to claim 9.

Regarding claims 10-16 and 18, respectively, they are substantially similar to claims 2-8 and 17, respectively, and hence the rejections are substantially similar.

Response to Arguments

5. Applicant's arguments filed 1/16/2019 have been fully considered but they are not persuasive. On pages 5-7 of applicant's response, applicant attempts to answer "Thus, the question is what is an active region ?" (especially see page 6 of applicant's response, 2nd last paragraph, last sentence). Applicant argues that claims now define "active region" as one where "active components" such as "transistors" are formed (page 6, last paragraph and page 7 of applicant's response). However, base claim 1 does not provide such a recitation – only that "circuitry" (which is a much broader term) can be formed in the active region. New claims 17 and 18 do not require all recited active regions (two are recited in each of claims 1 and 9) must include "active devices". Whereas the substrate (first active region) comprises the pixel structure and comprises active devices, the "second active region" only comprises part of an active device

(source/drain), which reads on “circuitry” but not on “circuitry” that “includes active devices”. However, that is not what is recited in the claims. In response to applicant's argument that the references fail to show certain features of applicant’s invention, it is noted that the features upon which applicant relies (i.e. “second active region” also comprises “circuitry” that “includes active devices”) are not recited in the rejected claim(s). Although the claims are interpreted in light of the specification, limitations from the specification are not read into the claims. See *In re Van Geuns*, 988 F.2d 1181, 26 USPQ2d 1057 (Fed. Cir. 1993).

Conclusion

6. Applicant's amendment necessitated the new ground(s) of rejection presented in this Office action. Accordingly, **THIS ACTION IS MADE FINAL**. See MPEP § 706.07(a). Applicant is reminded of the extension of time policy as set forth in 37 CFR 1.136(a).

A shortened statutory period for reply to this final action is set to expire THREE MONTHS from the mailing date of this action. In the event a first reply is filed within TWO MONTHS of the mailing date of this final action and the advisory action is not mailed until after the end of the THREE-MONTH shortened statutory period, then the shortened statutory period will expire on the date the advisory action is mailed, and any extension fee pursuant to 37 CFR 1.136(a) will be calculated from the mailing date of the advisory action. In no event, however, will the statutory period for reply expire later than SIX MONTHS from the date of this final action.

7. Any inquiry concerning this communication or earlier communications from the examiner should be directed to AJAY ARORA whose telephone number is (571)272-8347. The examiner can normally be reached on 9 AM - 5 PM.

Examiner interviews are available via telephone, in-person, and video conferencing using a USPTO supplied web-based collaboration tool. To schedule an interview, applicant is encouraged to use the USPTO Automated Interview Request (AIR) at http://www.uspto.gov/interviewpractice.

If attempts to reach the examiner by telephone are unsuccessful, the examiner's supervisor, Thao X. Le can be reached on 5712721708. The fax phone number for the organization where this application or proceeding is assigned is 571-273-8300.

Information regarding the status of an application may be obtained from the Patent Application Information Retrieval (PAIR) system. Status information for published applications may be obtained from either Private PAIR or Public PAIR. Status information for unpublished applications is available through Private PAIR only. For more information about the PAIR system, see http://pair-direct.uspto.gov. Should you have questions on access to the Private PAIR system, contact the Electronic Business Center (EBC) at 866-217-9197 (toll-free). If you would like assistance from a USPTO Customer Service Representative or access to the automated information system, call 800-786-9199 (IN USA OR CANADA) or 571-272-1000.

/AJAY ARORA/
Primary Examiner, Art Unit 2892

Index of Claims	Application/Control No.	Applicant(s)/Patent Under Reexamination
	15/590,282	RAO, G.R. MOHAN
	Examiner	**Art Unit**
	AJAY ARORA	2892

✓	Rejected	-	Cancelled	N	Non-Elected	A	Appeal
=	Allowed	÷	Restricted	I	Interference	O	Objected

CLAIMS

☐ Claims renumbered in the same order as presented by applicant ☐ CPA ☐ T.D. ☐ R.1.47

CLAIM		DATE								
Final	Original	05/13/2019	05/13/2019							
	1	✓	✓							
	2	✓	✓							
	3	✓	✓							
	4	✓	✓							
	5	✓	✓							
	6	✓	✓							
	7	✓	✓							
	8	✓	✓							
	9	✓	✓							
	10	✓	✓							
	11	✓	✓							
	12	✓	✓							
	13	✓	✓							
	14	✓	✓							
	15	✓	✓							
	16	✓	✓							
	17		✓							
	18		✓							

Search Notes	Application/Control No.	Applicant(s)/Patent Under Reexamination
	15/590,282	RAO, G.R. MOHAN
	Examiner	**Art Unit**
	AJAY ARORA	2892

CPC - Searched*		
Symbol	**Date**	**Examiner**
H01L 29/1095	6/25/2018	AKA

CPC Combination Sets - Searched*		
Symbol	**Date**	**Examiner**

US Classification - Searched*			
Class	**Subclass**	**Date**	**Examiner**
257	655	6/25/2018	AKA

* See search history printout included with this form or the SEARCH NOTES box below to determine the scope of the search.

Search Notes		
Search Notes	**Date**	**Examiner**
Inventor search	6/25/2018	AKA
Assignee search	6/25/2018	AKA
All references for parent applications considered	6/25/2018	AKA
EAST search history report	6/25/2018	AKA
Revised EAST search history report	05/13/2019	AKA

Interference Search			
US Class/CPC Symbol	**US Subclass/CPC Group**	**Date**	**Examiner**

/A.K.A./ Primary Examiner.Art Unit 2892	

Greenthread Ex. 2069, p. 93 of 199
Semiconductor v. Greenthread
IPR2023-01242

EAST Search History

EAST Search History (Prior Art)

Ref #	Hits	Search Query	DBs	Default Operator	Plurals	Time Stamp
L1	24	((("GREENTHREAD") near3 ("LLC"))).AS,AANM.	US-PGPUB; USPAT; USOCR; FPRS; EPO; JPO; DERWENT; IBM_TDB	OR	OFF	2019/05/13 10:42
L2	24	((("RAO") near3 ("G.R") near3 ("MOHAN"))).INV.	US-PGPUB; USPAT; USOCR; FPRS; EPO; JPO; DERWENT; IBM_TDB	OR	OFF	2019/05/13 10:42
L3	41	L1 L2	US-PGPUB; USPAT; USOCR; FPRS; EPO; JPO; DERWENT; IBM_TDB	OR	ON	2019/05/13 10:42
L4	8	(substrate and (first near3 (dop$3 impurity)) and (second near3 (dop$3 impurity)) and (active near2 circuit$2) and (grad$4 with (dop$3 impurity))).clm.	US-PGPUB; USPAT; USOCR; FPRS; EPO; JPO; DERWENT; IBM_TDB	OR	ON	2019/05/13 10:44

5/13/2019 11:29:27 AM
C:\Users\aarora\Documents\EAST\Workspaces\15590282.wsp

PTO/SB/06 (09-11)
Approved for use through 1/31/2014. OMB 0651-0032
U.S. Patent and Trademark Office; U.S. DEPARTMENT OF COMMERCE
Under the Paperwork Reduction Act of 1995, no persons are required to respond to a collection of information unless it displays a valid OMB control number.

PATENT APPLICATION FEE DETERMINATION RECORD Substitute for Form PTO-875	Application or Docket Number 15/590,282	Filing Date 05/09/2017	☐ To be Mailed

ENTITY: ☐ LARGE ☑ SMALL ☐ MICRO

APPLICATION AS FILED - PART I

FOR	(Column 1) NUMBER FILED	(Column 2) NUMBER EXTRA		RATE ($)	FEE ($)
☐ BASIC FEE (37 CFR 1.16(a), (b), or (c))	N/A	N/A		N/A	
☐ SEARCH FEE (37 CFR 1.16(k), (i), or (m))	N/A	N/A		N/A	
☐ EXAMINATION FEE (37 CFR 1.16(o), (p), or (q))	N/A	N/A		N/A	
TOTAL CLAIMS (37 CFR 1.16(i))	minus 20 =	*		x $40 =	
INDEPENDENT CLAIMS (37 CFR 1.16(h))	minus 3 =	*		x $210 =	
☐ APPLICATION SIZE FEE (37 CFR 1.16(s))	If the specification and drawings exceed 100 sheets of paper, the application size fee due is $310 ($155 for small entity) for each additional 50 sheets or fraction thereof. See 35 U.S.C. 41(a)(1)(G) and 37 CFR 1.16(s).				
☐ MULTIPLE DEPENDENT CLAIM PRESENT (37 CFR 1.16(j))					
* If the difference in column 1 is less than zero, enter "0" in column 2.				TOTAL	

APPLICATION AS AMENDED - PART II

AMENDMENT	01/16/2019	(Column 1) CLAIMS REMAINING AFTER AMENDMENT		(Column 2) HIGHEST NUMBER PREVIOUSLY PAID FOR	(Column 3) PRESENT EXTRA		RATE ($)	ADDITIONAL FEE ($)
	Total (37 CFR 1.16(i))	* 18	Minus	** 20	= 0		x $50 =	0
	Independent (37 CFR 1.16(h))	* 2	Minus	*** 3	= 0		x $230 =	0
	☐ Application Size Fee (37 CFR 1.16(s))							
	☐ FIRST PRESENTATION OF MULTIPLE DEPENDENT CLAIM (37 CFR 1.16(j))							
							TOTAL ADD'L FEE	0

AMENDMENT		(Column 1) CLAIMS REMAINING AFTER AMENDMENT		(Column 2) HIGHEST NUMBER PREVIOUSLY PAID FOR	(Column 3) PRESENT EXTRA		RATE ($)	ADDITIONAL FEE ($)
	Total (37 CFR 1.16(i))	*	Minus	**	=		x $0 =	
	Independent (37 CFR 1.16(h))	*	Minus	***	=		x $0 =	
	☐ Application Size Fee (37 CFR 1.16(s))							
	☐ FIRST PRESENTATION OF MULTIPLE DEPENDENT CLAIM (37 CFR 1.16(j))							
							TOTAL ADD'L FEE	

* If the entry in column 1 is less than the entry in column 2, write "0" in column 3.	LIE
** If the "Highest Number Previously Paid For" IN THIS SPACE is less than 20, enter "20".	/DAVID A HAUGHTON/
*** If the "Highest Number Previously Paid For" IN THIS SPACE is less than 3, enter "3".	
The "Highest Number Previously Paid For" (Total or Independent) is the highest number found in the appropriate box in column 1.	

This collection of information is required by 37 CFR 1.16. The information is required to obtain or retain a benefit by the public which is to file (and by the USPTO to process) an application. Confidentiality is governed by 35 U.S.C. 122 and 37 CFR 1.14. This collection is estimated to take 12 minutes to complete, including gathering, preparing, and submitting the completed application form to the USPTO. Time will vary depending upon the individual case. Any comments on the amount of time you require to complete this form and/or suggestions for reducing this burden, should be sent to the Chief Information Officer, U.S. Patent and Trademark Office, U.S. Department of Commerce, P.O. Box 1450, Alexandria, VA 22313-1450. DO NOT SEND FEES OR COMPLETED FORMS TO THIS ADDRESS. **SEND TO: Commissioner for Patents, P.O. Box 1450, Alexandria, VA 22313-1450.**

If you need assistance in completing the form, call 1-800-PTO-9199 and select option 2.

IN THE UNITED STATES PATENT AND TRADEMARK OFFICE

In re application of:	RAO, G.R. Mohan
Serial No.:	15/590,282
Confirmation No.:	1032
Filed:	May 9, 2017
Group:	2892
Examiner:	ARORA, Ajay
For:	SEMICONDUCTOR DEVICES WITH GRADED DOPANT REGIONS

Mail Stop AMENDMENT
Commissioner for Patents
P.O. Box 1450
Alexandria, VA 22313-1450

Dear Sir:

AMENDMENT AND RESPONSE TO OFFICE ACTION

This communication is responsive to the Examiner's Office Action dated July 17, 2018. Reconsideration is respectfully requested.

Amendments to the Claims are reflected in the listing of claims beginning on page 2 of this paper.

Remarks/Arguments begin on page 6 of this paper.

PTO/AIA/22 (03-13)
Approved for use through 11/30/2020. OMB 0651-0031
U.S. Patent and Trademark Office; U.S. DEPARTMENT OF COMMERCE
Under the Paperwork Reduction Act of 1995, no persons are required to respond to a collection of information unless it displays a valid OMB control number.

PETITION FOR EXTENSION OF TIME UNDER 37 CFR 1.136(a)

Docket Number (Optional): GRTD60-33439

Application Number: 15/590,282

Filed: May 9, 2017

For: SEMICONDUCTOR DEVICES WITH GRADED DOPANT REGIONS

Art Unit: 2892

Examiner: ARORA, Ajay

This is a request under the provisions of 37 CFR 1.136(a) to extend the period for filing a reply in the above-identified application.

The requested extension and fee are as follows (check time period desired and enter the appropriate fee below):

		Fee	Small Entity Fee	Micro Entity Fee	
☐	One month (37 CFR 1.17(a)(1))	$200	$100	$50	$
☐	Two months (37 CFR 1.17(a)(2))	$600	$300	$150	$
☑	Three months (37 CFR 1.17(a)(3))	$1,400	$700	$350	$ 700
☐	Four months (37 CFR 1.17(a)(4))	$2,200	$1,100	$550	$
☐	Five months (37 CFR 1.17(a)(5))	$3,000	$1,500	$750	$

☑ Applicant asserts small entity status. See 37 CFR 1.27.

☐ Applicant certifies micro entity status. See 37 CFR 1.29.
Form PTO/SB/15A or B or equivalent must either be enclosed or have been submitted previously.

☐ A check in the amount of the fee is enclosed.

☐ Payment by credit card. Form PTO-2038 is attached.

☐ The Director has already been authorized to charge fees in this application to a Deposit Account.

☑ The Director is hereby authorized to charge any fees which may be required, or credit any overpayment, to Deposit Account Number 500208.

☑ Payment made via EFS-Web.

WARNING: Information on this form may become public. Credit card information should not be included on this form. Provide credit card information and authorization on PTO-2038.

I am the

☐ applicant.

☑ attorney or agent of record. Registration number 30646.

☐ attorney or agent acting under 37 CFR 1.34. Registration number _____.

/Gregory M. Howison, Reg. #30646/
Signature

January 16, 2019
Date

Gregory M. Howison
Typed or printed name

972-628-3600
Telephone Number

NOTE: This form must be signed in accordance with 37 CFR 1.33. See 37 CFR 1.4 for signature requirements and certifications. Submit multiple forms if more than one signature is required, see below*.

☑ * Total of ONE forms are submitted.

This collection of information is required by 37 CFR 1.136(a). The information is required to obtain or retain a benefit by the public, which is to file (and by the USPTO to process) an application. Confidentiality is governed by 35 U.S.C. 122 and 37 CFR 1.11 and 1.14. This collection is estimated to take 6 minutes to complete, including gathering, preparing, and submitting the completed application form to the USPTO. Time will vary depending upon the individual case. Any comments on the amount of time you require to complete this form and/or suggestions for reducing this burden should be sent to the Chief Information Officer, U.S. Patent and Trademark Office, U.S. Department of Commerce, P.O. Box 1450, Alexandria, VA 22313-1450. DO NOT SEND FEES OR COMPLETED FORMS TO THIS ADDRESS. SEND TO: Mail Stop PCT, Commissioner for Patents, P.O. Box 1450, Alexandria, VA 22313-1450.

Electronic Patent Application Fee Transmittal

Application Number:	15590282
Filing Date:	09-May-2017
Title of Invention:	SEMICONDUCTOR DEVICES WITH GRADED DOPANT REGIONS
First Named Inventor/Applicant Name:	G.R. MOHAN RAO
Filer:	Gregory Michael Howison/Ashley Boyes
Attorney Docket Number:	GRTD-33439

Filed as Small Entity

Filing Fees for Utility under 35 USC 111(a)

Description	Fee Code	Quantity	Amount	Sub-Total in USD($)
Basic Filing:				
Pages:				
Claims:				
Miscellaneous-Filing:				
Petition:				
Patent-Appeals-and-Interference:				
Post-Allowance-and-Post-Issuance:				
Extension-of-Time:				

Description	Fee Code	Quantity	Amount	Sub-Total in USD($)
Extension - 3 months with $0 paid	2253	1	700	700
Miscellaneous:				
			Total in USD ($)	**700**

Electronic Acknowledgement Receipt

EFS ID:	34876098
Application Number:	15590282
International Application Number:	
Confirmation Number:	1032
Title of Invention:	SEMICONDUCTOR DEVICES WITH GRADED DOPANT REGIONS
First Named Inventor/Applicant Name:	G.R. MOHAN RAO
Customer Number:	25883
Filer:	Gregory Michael Howison
Filer Authorized By:	
Attorney Docket Number:	GRTD-33439
Receipt Date:	16-JAN-2019
Filing Date:	09-MAY-2017
Time Stamp:	18:21:33
Application Type:	Utility under 35 USC 111(a)

Payment information:

Submitted with Payment	yes
Payment Type	CARD
Payment was successfully received in RAM	$700
RAM confirmation Number	011719INTEFSW18243900
Deposit Account	500208
Authorized User	Gregory Howison

The Director of the USPTO is hereby authorized to charge indicated fees and credit any overpayment as follows:

37 CFR 1.17 (Patent application and reexamination processing fees)

37 CFR 1.21 (Miscellaneous fees and charges)

File Listing:

Document Number	Document Description	File Name	File Size(Bytes)/ Message Digest	Multi Part /.zip	Pages (if appl.)
1		GRT33439AMD011619.pdf	122884 1086404bf650a6a61e1a780c339a4e567c9126d6	yes	8
	Multipart Description/PDF files in .zip description				
	Document Description		**Start**	**End**	
	Amendment/Req. Reconsideration-After Non-Final Reject		1	1	
	Claims		2	5	
	Applicant Arguments/Remarks Made in an Amendment		6	8	
Warnings:					
Information:					
2	Extension of Time	GRT33439EXT011619.pdf	126325 4af6f6b087cd12af850de4ab03510468d702267b	no	1
Warnings:					
Information:					
3	Fee Worksheet (SB06)	fee-info.pdf	30793 8f7a95b472d5d3f12ffca7028f0830d2c0c8ee30	no	2
Warnings:					
Information:					
		Total Files Size (in bytes):	280002		

This Acknowledgement Receipt evidences receipt on the noted date by the USPTO of the indicated documents, characterized by the applicant, and including page counts, where applicable. It serves as evidence of receipt similar to a Post Card, as described in MPEP 503.

New Applications Under 35 U.S.C. 111
If a new application is being filed and the application includes the necessary components for a filing date (see 37 CFR 1.53(b)-(d) and MPEP 506), a Filing Receipt (37 CFR 1.54) will be issued in due course and the date shown on this Acknowledgement Receipt will establish the filing date of the application.
National Stage of an International Application under 35 U.S.C. 371
If a timely submission to enter the national stage of an international application is compliant with the conditions of 35 U.S.C. 371 and other applicable requirements a Form PCT/DO/EO/903 indicating acceptance of the application as a national stage submission under 35 U.S.C. 371 will be issued in addition to the Filing Receipt, in due course.
New International Application Filed with the USPTO as a Receiving Office
If a new international application is being filed and the international application includes the necessary components for an international filing date (see PCT Article 11 and MPEP 1810), a Notification of the International Application Number and of the International Filing Date (Form PCT/RO/105) will be issued in due course, subject to prescriptions concerning national security, and the date shown on this Acknowledgement Receipt will establish the international filing date of the application.

In the Claims

This listing of claims will replace all prior versions, and listings, of claims in the application:

1. (Currently Amended) A semiconductor device, comprising:

a substrate of a first doping type at a first doping level having first and second surfaces;

a first active region disposed adjacent the first surface of the substrate with a second doping type opposite in conductivity to the first doping type <u>and within which circuitry can be formed</u>;

a second active region separate from the first active region disposed adjacent to the first active region <u>and within which circuitry can be formed</u>;

circuitry formed in at least one of the first active region or second active region; and

at least a portion of at least one of the first and second active regions having at least one graded dopant concentration to aid carrier movement from the first surface to the second surface of the substrate.

2. (Original) The semiconductor device of Claim 1, wherein the substrate is a p-type substrate.

3. (Original) The semiconductor device of Claim 1, wherein the substrate is an n-type substrate.

4. (Original) The semiconductor device of Claim 1, wherein the substrate has epitaxial silicon on top of a nonepitaxial substrate.

5. (Original) The semiconductor device of Claim 1, wherein the first active region and second active region contain p-channel and n-channel devices.

6. (Original) The semiconductor device of Claim 1, wherein the first active region and second active region contain either p-channel or n-channel devices.

7. (Original) The semiconductor device of Claim 1, wherein the first active region and second active region are each separated by at least one isolation region.

8. (Original) The semiconductor device of Claim 1, wherein the graded dopant is fabricated with an ion implantation process.

9. (Currently Amended) A semiconductor device, comprising:

a substrate of a first doping type at a first doping level having first and second surfaces;

a first active region disposed adjacent the first surface of the substrate with a second doping type opposite in conductivity to the first doping type <u>and within which circuitry can be formed in the surface thereof</u>;

a second active region separate from the first active region disposed adjacent to the first active region <u>and within which circuitry can be formed in the surface thereof</u>;

circuitry formed in at least one of the first active region or second active region; and

at least a portion of at least one of the first and second active regions having at least one graded dopant concentration to aid carrier movement from the surface to the substrate.

10. (Original) The semiconductor device of Claim 9, wherein the substrate is a p-type substrate.

11. (Original) The semiconductor device of Claim 9, wherein the substrate is an n-type substrate.

12. (Original) The semiconductor device of Claim 9, wherein the substrate has epitaxial silicon on top of a nonepitaxial substrate.

13. (Original) The semiconductor device of Claim 9, wherein the first active region and second active region contain p-channel and n-channel devices.

14. (Original) The semiconductor device of Claim 9, wherein the first active region and second active region contain either p-channel or n-channel devices.

15. (Original) The semiconductor device of Claim 9, wherein the first active region and second active region are each separated by at least one isolation region.

16. (Original) The semiconductor device of Claim 9, wherein the graded dopant is fabricated with an ion implantation process.

17. (New) The semiconductor device of Claim 1, wherein the circuitry includes active devices.

18. (New) The semiconductor device of Claim 9, wherein the circuitry includes active devices.

REMARKS

Applicant has carefully reviewed the Office Action dated July 17, 2018. Applicant has amended Claims 1 and 9 and added new Claims 17 and 18 to more clearly point out the present inventive concept. Reconsideration and favorable action is respectfully requested.

Claims 1 – 16 stand rejected under 35 USC §103(a) as being anticipated by *Hong*. This rejection is respectfully traversed with respect to the claims as currently presented.

A basic misunderstanding between how the claims are drafted and how the Examiner is interpreted them is with respect to the term "active region." This will be discussed in detail.

With respect to the *Hong* reference, the primary figure, Figure 4D is reproduced as follows:

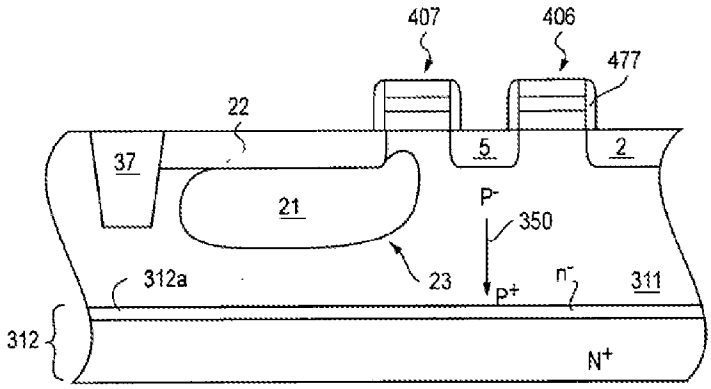

FIG. 4D

This Figure depicts the final construction at formation of the various doped regions. The description of this construction is as follows for the Examiner's convenience:

> As shown in FIG. 4D, the n-type region 21 is formed from a point adjacent the transfer gate stack 407 and extending in the epitaxial layer 311 between the gate stack 407 and the isolation region 37. The region 21 forms a photosensitive charge accumulating region for collecting photo-generated charge.

> The doped surface layer 22 for the photo-conversion device 23 is implanted and formed as a highly doped p-type surface layer. A p-type dopant, such as boron, indium, or any other suitable p-type dopant, may be used to form the p-type surface layer 22. The p-type surface layer 22 may be formed by known techniques. For example, layer 22 may be formed by implanting p-type ions through openings in a layer of photoresist. Alternatively, layer 22 may be formed by a gas source plasma doping process, or by diffusing a p-type dopant into the epitaxial layer 311 from an in-situ doped layer or a doped oxide layer deposited over the area where layer 22 is to be formed.
>
> The floating diffusion region 5 and source/drain region 2 are implanted by known methods, as also shown in FIG. 4D. The floating diffusion region 5 and source/drain region 2 are formed as n-type regions. Any suitable n-type dopant, such as phosphorus, arsenic, or antimony, may be used. The floating diffusion region 5 is formed on the side of the transfer gate stack 407 opposite the n-type photodiode region 21. The source/drain region 2 is formed on a side of the reset gate stack 406 opposite the floating diffusion region 5.
>
> Conventional processing methods can be used to form other structures of the pixel cell 300. For example, insulating, shielding, and metallization layers to connect gate lines, and other connections to the pixel cell 300 may be formed. Also, the entire surface may be covered with a passivation layer (not shown) of, for example, silicon dioxide, borosilicate glass (BSG), phosphosilicate glass (PSG), or borophosphosilicate glass (BPSG), which is CMP planarized and etched to provide contact holes, which are then metallized to provide contacts. Conventional layers of conductors and insulators may also be used to interconnect the structures and to connect pixel 300 to peripheral circuitry. (¶ ¶ 0038-0041).

From this description, it can be clearly seen that the region 2 is a source/drain region and it is formed similarly with the region 5 referred to as floating diffusion region. Both of the stacks 407 and 406 are referred to as "gate stacks." These are basically the gates of the transistors. Underneath the transistor gates is formed a channel region. The region 22 is referred to merely as a P-type surface layer. The doping range of this layer is not set forth. However, the structure formed by the region 22, region 21 and the region 311 forms a P-N-P photodiode. Thus, the question is-what is an active region?

The Examiner has referred to the first active region as the region 311, but has referred to the regions 21, 22, 5 and 2 as "wells." There is no support for such a construction, as the term "wells" in semiconductor technology is typically referred to as a region formed in a substrate within which active components are formed. The Examiner has referred to the second active region as being that defined by the source/drain region 2 or the regions 2 or 5 or 22 of the pixel

cell. Applicant has amended the claims to define the "active regions" as regions within which circuitry can be formed. The operation of the structure as set forth in ¶ 0007 as follows:

> In the CMOS pixel cell 10 depicted in FIGS. 1 and 2, electrons are generated by light incident on the photo-conversion device 23 and are stored in the n-type photodiode region 21. These charges are transferred to the floating diffusion region 5 by the transfer transistor 17 when the transfer transistor 17 is activated. The source follower transistor 19 produces an output signal based on the transferred charges applied to its gate. A maximum output signal is proportional to the number of electrons extracted from the n-type photodiode region 21.

Thus, the trapped charges are stored in the region 21, and all the region 22 does is provide a contact with one side of the channel under the transfer transistor/stack 17 to allow charge to be transferred from the photodiode region 21 to the floating diffusion region 5 when transfer transistor/stack 17 is activated and the underlying channel is conductive. Thus, there is provided an active region 311 within which two transistors are formed with the transistor gate stacks 407 and 406 and their associated source/drain regions. The actual source for the transistor stack 407 is the N-type region 21 which is connected to the channel underlying the gate stack 407 by the P-type region 22. There are no active devices formed within the region 22 or the region 5 or the region 2 within which circuitry (active devices) can be formed - the active devices are formed only within the active region 311.

Applicant believes that *Hong* does not anticipate or obviate Claims 1 – 16, as currently presented, and therefore respect requests withdrawal of the 35 USC §103(a) rejection with respect thereto.

Applicant has now made an earnest attempt in order to place this case in condition for allowance. For the reasons stated above, Applicant respectfully requests full allowance of the claims as amended.

If any issues arise, or if the Examiner has any suggestions for expediting allowance of this Application, the Applicant respectfully invites the Examiner to contact the undersigned at the telephone number indicated below or at kharden@munckwilson.com.

Recognizing that Internet communications are not secure, Applicant hereby authorizes

the USPTO to communicate with the undersigned and practitioners in accordance with 37 CFR 1.33 and 37 CFR 1.34 concerning any subject matter of this application by video conferencing, instant messaging, or electronic mail. Applicant understands that a copy of these communications will be made of record in the application file.

Please charge any additional fees or deficiencies in fees or credit any overpayment to Deposit Account No. 20-0780/GRTD-33439.

Respectfully submitted,
MUNCK WILSON MANDALA, LLP
Attorneys for Applicant

/Gregory M. Howison, Reg. #30646/

Gregory M. Howison
Registration No. 30,646

GMH/als

P.O. Drawer 800889
Dallas, Texas 75380
Tel: 972-628-3600
Fax: 972-628-3616
January 16, 2019

UNITED STATES PATENT AND TRADEMARK OFFICE

UNITED STATES DEPARTMENT OF COMMERCE
United States Patent and Trademark Office
Address: COMMISSIONER FOR PATENTS
P.O. Box 1450
Alexandria, Virginia 22313-1450
www.uspto.gov

APPLICATION NO.	FILING DATE	FIRST NAMED INVENTOR	ATTORNEY DOCKET NO.	CONFIRMATION NO.
15/590,282	05/09/2017	G.R. MOHAN RAO	GRTD-33439	1032

25883 7590 07/17/2018
MUNCK WILSON MANDALA L.L.P
P.O. Drawer 800889
DALLAS, TX 75380

EXAMINER
ARORA, AJAY

ART UNIT	PAPER NUMBER
2892	

NOTIFICATION DATE	DELIVERY MODE
07/17/2018	ELECTRONIC

Please find below and/or attached an Office communication concerning this application or proceeding.

The time period for reply, if any, is set in the attached communication.

Notice of the Office communication was sent electronically on above-indicated "Notification Date" to the following e-mail address(es):

admin@dalpat.com
eofficeaction@appcoll.com
IPdocketing@munckwilson.com

Office Action Summary	Application No. 15/590,282	Applicant(s) RAO, G.R. MOHAN	
	Examiner AJAY K. ARORA	Art Unit 2892	AIA (First Inventor to File) Status No

-- The MAILING DATE of this communication appears on the cover sheet with the correspondence address --

Period for Reply

A SHORTENED STATUTORY PERIOD FOR REPLY IS SET TO EXPIRE 3 MONTHS FROM THE MAILING DATE OF THIS COMMUNICATION.

- Extensions of time may be available under the provisions of 37 CFR 1.136(a). In no event, however, may a reply be timely filed after SIX (6) MONTHS from the mailing date of this communication.
- If NO period for reply is specified above, the maximum statutory period will apply and will expire SIX (6) MONTHS from the mailing date of this communication.
- Failure to reply within the set or extended period for reply will, by statute, cause the application to become ABANDONED (35 U.S.C. § 133). Any reply received by the Office later than three months after the mailing date of this communication, even if timely filed, may reduce any earned patent term adjustment. See 37 CFR 1.704(b).

Status

1)☒ Responsive to communication(s) filed on 5/9/2017.

☐ A declaration(s)/affidavit(s) under **37 CFR 1.130(b)** was/were filed on _____.

2a)☐ This action is **FINAL**. 2b)☒ This action is non-final.

3)☐ An election was made by the applicant in response to a restriction requirement set forth during the interview on _____; the restriction requirement and election have been incorporated into this action.

4)☐ Since this application is in condition for allowance except for formal matters, prosecution as to the merits is closed in accordance with the practice under *Ex parte Quayle*, 1935 C.D. 11, 453 O.G. 213.

Disposition of Claims*

5)☒ Claim(s) 1-16 is/are pending in the application.

5a) Of the above claim(s) _____ is/are withdrawn from consideration.

6)☐ Claim(s) _____ is/are allowed.

7)☒ Claim(s) 1-16 is/are rejected.

8)☐ Claim(s) _____ is/are objected to.

9)☐ Claim(s) _____ are subject to restriction and/or election requirement.

* If any claims have been determined allowable, you may be eligible to benefit from the **Patent Prosecution Highway** program at a participating intellectual property office for the corresponding application. For more information, please see http://www.uspto.gov/patents/init_events/pph/index.jsp or send an inquiry to PPHfeedback@uspto.gov.

Application Papers

10)☐ The specification is objected to by the Examiner.

11)☒ The drawing(s) filed on 5/9/2017 is/are: a)☒ accepted or b)☐ objected to by the Examiner.

Applicant may not request that any objection to the drawing(s) be held in abeyance. See 37 CFR 1.85(a).

Replacement drawing sheet(s) including the correction is required if the drawing(s) is objected to. See 37 CFR 1.121(d).

Priority under 35 U.S.C. § 119

12)☐ Acknowledgment is made of a claim for foreign priority under 35 U.S.C. § 119(a)-(d) or (f).

Certified copies:

a)☐ All b)☐ Some** c)☐ None of the:

1.☐ Certified copies of the priority documents have been received.

2.☐ Certified copies of the priority documents have been received in Application No. _____.

3.☐ Copies of the certified copies of the priority documents have been received in this National Stage application from the International Bureau (PCT Rule 17.2(a)).

** See the attached detailed Office action for a list of the certified copies not received.

Attachment(s)

1) ☒ Notice of References Cited (PTO-892)

2) ☒ Information Disclosure Statement(s) (PTO/SB/08a and/or PTO/SB/08b) Paper No(s)/Mail Date 8/9/2017 & 10/5/2017.

3) ☐ Interview Summary (PTO-413) Paper No(s)/Mail Date. _____ .

4) ☐ Other: _____.

Greenthread Exhibit 2069, p. 1 of 198
IPR2023-01242
Greenthread Exhibit 2069, p. 1 of 198
Semiconductor v. Greenthread
IPR2023-01242

DETAILED ACTION

1. The present application is being examined under the pre-AIA first to invent provisions.

Claim Rejections - 35 USC § 103

2. The following is a quotation of pre-AIA 35 U.S.C. 103(a) which forms the basis for all obviousness rejections set forth in this Office action:

> (a) A patent may not be obtained though the invention is not identically disclosed or described as set forth in section 102 of this title, if the differences between the subject matter sought to be patented and the prior art are such that the subject matter as a whole would have been obvious at the time the invention was made to a person having ordinary skill in the art to which said subject matter pertains. Patentability shall not be negatived by the manner in which the invention was made.

3. Claims 1-16 are rejected under pre-AIA 35 U.S.C. 103(a) as being unpatentable over Hong (US 2007/0045682, hereinafter Hong.

Regarding claim 1, Hong (refer to Figures 4A-4D and 5A-5C) teaches a semiconductor device, comprising:

a substrate (312 – see para 29)of a first doping type (i.e. parts 312 and 21 of the substrate have n-type doping, see para 29) at a first doping level having first and second surfaces;

a first active region (311, which includes wells such as 21, 22, 5, 2) disposed adjacent the first surface of the substrate with a second doping type opposite in conductivity to the first doping type (i.e. p-type, see para 29);

a second active region (such as source/drain region 2, see para 40; or 2 or 5 or 22 of pixel cell formed in an adjacent region separated by shallow trench isolation 37 – see para 30) separate from the first active region disposed adjacent to the first active region;

circuitry (comprising pixel cell 300 described in para 28, including transistors corresponding to 407 or 406 – see para 32) formed in at least one of the first active region or second active region; and

at least a portion of at least one of the first and second active regions having at least one graded dopant concentration (350 – see para 24, last 3 sentences; also see Figure 5C and para 29) to aid carrier movement (para 26).

Hong does not specifically state that the aiding of carrier movement is “from the first surface to the second surface of the substrate”. However, Hong teaches that although a p-n-p photodiode is shown formed in Figure 4D, other photodiode types may be formed (para 42); and that gradients different from those shown in examples of Figure 5A-5C may be used (para 24, especially last sentence). It would have been obvious to one of ordinary skills in the art at the time of the invention to modify Hong so that the aiding of carrier movement is “from the first surface to the second surface of the substrate”. The ordinary artisan would have been motivated to modify Hong for at least the purpose of using a gradient suitable for a photo-conversion device (23 of Figure 4D, see para 26) in which at least a part that collects carriers is aided by the gradient, for example as case where said part is formed in or extends into the substrate, or when vertical devices are formed.

Regarding claims 2-3, Hong (refer to Figures 4A-4D and 5A-5C) teaches that the substrate (312) may be a p-type substrate (para 42), as recited in claim 2; or may be an n-type substrate (see Figure 4D), as recited in claim 3.

Regarding claim 4, Hong (refer to Figures 4A-4D and 5A-5C) teaches that the substrate (312) has epitaxial silicon on top of a nonepitaxial substrate (para 19 describes that the term “substrate” includes silicon-on-insulator, which includes epitaxial silicon on top of a nonepitaxial substrate).

Regarding claims 5-6, Hong (refer to Figures 4A-4D and 5A-5C) teaches that the first active region and second active region may contain contain p-channel or n-channel devices (see Figure 4D and para 42) and further teaches that different configuration of device(s) are possible (para 42-43). It would have been obvious to one of ordinary skills in the art at the time of the invention to modify Hong so that the first active region and second active region “contain p-channel and n-channel devices” (as recited in claim 5); or “contain either p-channel or n-channel devices. The ordinary artisan would have been motivated to modify Hong for at least the purpose of Motivation: at least for the purpose of forming image sensors where either p-channel device or n-channel devices are used; or a combination of such devices is used to design the circuit for maximum electrical efficiency for the given design requirements.

Regarding claim 7, Hong (refer to Figures 4A-4D and 5A-5C) teaches that the first active region and second active region may each separated by at least one isolation region (37, as explained for claim 1).

Regarding claim 8, it is a product claim but recites a method of steps therein; i.e. the graded dopant is “fabricated with an ion implantation process”. Therefore, the claim amounts to a product by process claim. *"Even though product-by-process claims are limited by and defined by the process, determination of patentability is based on the product itself. The patentability of a product does not depend on its method of production. If the product in the product-by-process claim is the same as or obvious from a product of the prior art, the claim is unpatentable even though the prior product was made by a different process." In re Thorpe, 777 F.2d 695, 698, 227 USPQ 964, 966 (Fed. Cir. 1985). See MPEP 2113.*

Claim 9 is substantially similar to claim 1 – instead of the limitation “from the first surface to the second surface of the substrate” of claim 1, claim 9 instead recites “from the surface to the substrate”. As such, the rejection of claim 1 also applies to claim 9.

Regarding claims 10-16, respectively, they are substantially similar to claims 2-8, respectively, and hence the rejections are substantially similar.

Conclusion

Any inquiry concerning this communication or earlier communications from the examiner should be directed to AJAY K. ARORA whose telephone number is (571)272-8347. The examiner can normally be reached on Mon through Fri, 8:30am to 5:00pm.

Examiner interviews are available via telephone, in-person, and video conferencing using a USPTO supplied web-based collaboration tool. To schedule an

interview, applicant is encouraged to use the USPTO Automated Interview Request (AIR) at http://www.uspto.gov/interviewpractice.

If attempts to reach the examiner by telephone are unsuccessful, the examiner's supervisor, Thao X. Le can be reached on (571) 272-1708. The fax phone number for the organization where this application or proceeding is assigned is 571-273-8300.

Information regarding the status of an application may be obtained from the Patent Application Information Retrieval (PAIR) system. Status information for published applications may be obtained from either Private PAIR or Public PAIR. Status information for unpublished applications is available through Private PAIR only. For more information about the PAIR system, see http://pair-direct.uspto.gov. Should you have questions on access to the Private PAIR system, contact the Electronic Business Center (EBC) at 866-217-9197 (toll-free). If you would like assistance from a USPTO Customer Service Representative or access to the automated information system, call 800-786-9199 (IN USA OR CANADA) or 571-272-1000.

/AJAY K. ARORA/
Primary Examiner, Art Unit 2892

Notice of References Cited	Application/Control No. 15/590,282	Applicant(s)/Patent Under Reexamination RAO, G.R. MOHAN	
	Examiner AJAY K. ARORA	Art Unit 2892	Page 1 of 1

U.S. PATENT DOCUMENTS

*		Document Number Country Code-Number-Kind Code	Date MM-YYYY	Name	CPC Classification	US Classification
*	A	US-2012/0048462 A1	03-2012	Lee; Kyung-Jun	B32B37/185	156/272.8
*	B	US-2007/0045682 A1	03-2007	Hong; Sungkwon C.	H01L27/14601	257/292
	C	US-				
	D	US-				
	E	US-				
	F	US-				
	G	US-				
	H	US-				
	I	US-				
	J	US-				
	K	US-				
	L	US-				
	M	US-				

FOREIGN PATENT DOCUMENTS

*		Document Number Country Code-Number-Kind Code	Date MM-YYYY	Country	Name	CPC Classification
	N					
	O					
	P					
	Q					
	R					
	S					
	T					

NON-PATENT DOCUMENTS

*		Include as applicable: Author, Title Date, Publisher, Edition or Volume, Pertinent Pages)
	U	
	V	
	W	
	X	

*A copy of this reference is not being furnished with this Office action. (See MPEP § 707.05(a).)
Dates in MM-YYYY format are publication dates. Classifications may be US or foreign.

Index of Claims	Application/Control No.	Applicant(s)/Patent Under Reexamination
	15590282	RAO, G.R. MOHAN
	Examiner	**Art Unit**
	AJAY K ARORA	2892

✓	Rejected	-	Cancelled	N	Non-Elected	A	Appeal
=	Allowed	÷	Restricted	I	Interference	O	Objected

☐ Claims renumbered in the same order as presented by applicant ☐ CPA ☐ T.D. ☐ R.1.47

CLAIM		DATE								
Final	Original	06/25/2018								
	1	✓								
	2	✓								
	3	✓								
	4	✓								
	5	✓								
	6	✓								
	7	✓								
	8	✓								
	9	✓								
	10	✓								
	11	✓								
	12	✓								
	13	✓								
	14	✓								
	15	✓								
	16	✓								

Search Notes	Application/Control No.	Applicant(s)/Patent Under Reexamination
	15590282	RAO, G.R. MOHAN
	Examiner	**Art Unit**
	AJAY K ARORA	2892

CPC- SEARCHED

Symbol	Date	Examiner
H01L 29/1095	6/25/2018	AKA

CPC COMBINATION SETS - SEARCHED

Symbol	Date	Examiner

US CLASSIFICATION SEARCHED

Class	Subclass	Date	Examiner
257	655	6/25/2018	AKA

* See search history printout included with this form or the SEARCH NOTES box below to determine the scope of the search.

SEARCH NOTES

Search Notes	Date	Examiner
Inventor search	6/25/2018	AKA
Assignee search	6/25/2018	AKA
All references for parent applications considered	6/25/2018	AKA
EAST search history report	6/25/2018	AKA

INTERFERENCE SEARCH

US Class/ CPC Symbol	US Subclass / CPC Group	Date	Examiner

	/A.K.A./ Primary Examiner.Art Unit 2892

EAST Search History

EAST Search History (Prior Art)

Ref #	Hits	Search Query	DBs	Default Operator	Plurals	Time Stamp
S1	1	15/590,282	US-PGPUB; USPAT; USOCR; FPRS; EPO; JPO; DERWENT; IBM_TDB	OR	OFF	2018/06/25 06:54
S2	208	("20020102783" | "20030026126" | "20030030488" | "6211028" | "6310366" | "6753202" | "7115925" | "8164124" | "6878603" | "20020056883" | "20020093281" | "20150200314" | "4347654" | "5496746" | "6452086" | "6737722" | "6747883" | "6780713" | "20030042511" | "5029277" | "5888857" | "6670544" | "6706550" | "6713813" | "6921943" | "7504692" | "20040027753" | "4160985" | "5448087" | "6472715" | "6683343" | "6831292" | "7307327" | "5569612" | "5575862" | "5637898" | "6720622" | "6744117" | "20020134419" | "20060113592" | "20130001661" | "4481522" | "5262345" | "6756616" | "6933215" | "7233044" | "20010040622" | "20020074585" | "5130262" | "5213988" | "5329144" | "6465862" | "6696314" | "RE37441" | "20020084430" | "4001864" | "4866000" | "5480816" | "5517052" | "5797999" | "5973575" | "6754093" | "7064385").PN.	US-PGPUB; USPAT; USOCR; FPRS; EPO; JPO; DERWENT; IBM_TDB	OR	OFF	2018/06/25 06:55
S3	22	((("GREENTHREAD") near3 ("LLC"))).AS,AANM.	US-PGPUB; USPAT; USOCR; FPRS; EPO; JPO; DERWENT; IBM_TDB	OR	OFF	2018/06/25 06:57
S4	23	((("RAO") near3 ("G.R") near3 ("MOHAN"))).INV.	US-PGPUB; USPAT; USOCR; FPRS; EPO; JPO; DERWENT; IBM_TDB	OR	OFF	2018/06/25 06:57
S5	1112	(257/655).CCLS.	US-PGPUB; USPAT; USOCR; FPRS; EPO; JPO; DERWENT; IBM_TDB	OR	OFF	2018/06/25 06:57

S6	19693	h01l29/1095.cpc.	US-PGPUB; USPAT; USOCR; FPRS; EPO; JPO; DERWENT; IBM_TDB	OR	OFF	2018/06/25 06:58
S7	187	("20030030488" | "20020102783" | "20030026126" | "20030030488" | "6211028" | "6310366" | "6753202" | "7115925" | "8164124" | "20020056883" | "20020093281" | "20150200314" | "4347654" | "5496746" | "6452086" | "6737722" | "6747883" | "20030042511" | "5029277" | "5888857" | "6670544" | "6706550" | "6713813" | "6921943" | "20040027753" | "4160985" | "5448087" | "6472715" | "6683343" | "6831292" | "7307327" | "5569612" | "5575862" | "5637898" | "6720622" | "6744117" | "20020134419" | "20060113592" | "20130001661" | "4481522" | "5262345" | "6756616" | "20010040622" | "20020074585" | "5130262" | "5213988" | "5329144" | "6465862" | "6696314" | "RE37441" | "20020084430" | "4001864" | "4866000" | "5480816" | "5517052" | "5797999" | "5973575" | "6754093").PN.	US-PGPUB; USPAT; USOCR; FPRS; EPO; JPO; DERWENT; IBM_TDB	OR	OFF	2018/06/25 06:59
S8	10	("20010040622" | "20030030488" | "4160985").PN.	US-PGPUB; USPAT; USOCR; FPRS; EPO; JPO; DERWENT; IBM_TDB	OR	OFF	2018/06/25 07:00
S9	27	("5448087" | "5888857" | "20030030488" | "6720622" | "20030026126" | "5973575" | "5262345" | "20040027753").PN.	US-PGPUB; USPAT; USOCR; FPRS; EPO; JPO; DERWENT; IBM_TDB	OR	OFF	2018/06/25 07:02
S10	44	("20020056883" | "20020084430" | "20020102783" | "20030042511" | "4160985" | "5637898" | "5517052" | "4481522" | "6831292" | "20020093281" | "5029277" | "20060113592" | "20020134419").PN.	US-PGPUB; USPAT; USOCR; FPRS; EPO; JPO; DERWENT; IBM_TDB	OR	OFF	2018/06/25 07:03
S11	92	("20020074585" | "5496746" | "6683343" | "6696314" | "6452086" | "6472715" | "6747883" | "5797999" | "6670544" | "20040063288" | "4347654" | "4866000" | "6744117" | "6754093" | "5213988" | "5569612" | "RE37441" | "4001864" | "6756616" | "5130262" | "5329144" | "6706550" | "6753202" | "5480816" | "6713813" | "6737722" | "5575862" | "6211028").PN.	US-PGPUB; USPAT; USOCR; FPRS; EPO; JPO; DERWENT; IBM_TDB	OR	OFF	2018/06/25 07:04
S12	189	S7 S8 S9 S10 S11	US-PGPUB; USPAT; USOCR;	OR	OFF	2018/06/25 07:05

			FPRS; EPO; JPO; DERWENT; IBM_TDB			
S13	21	S2 NOT S12	US-PGPUB; USPAT; USOCR; FPRS; EPO; JPO; DERWENT; IBM_TDB	OR	OFF	2018/06/25 07:06
S14	22949	(grad$4 with dop$3)	US-PGPUB; USPAT; USOCR; FPRS; EPO; JPO; DERWENT; IBM_TDB	OR	OFF	2018/06/25 07:09
S15	3307	S14 and (substrate with surface with (first one) with (second other opposi$3))	US-PGPUB; USPAT; USOCR; FPRS; EPO; JPO; DERWENT; IBM_TDB	OR	ON	2018/06/25 07:11
S16	657	S15 and (carrier with surface)	US-PGPUB; USPAT; USOCR; FPRS; EPO; JPO; DERWENT; IBM_TDB	OR	ON	2018/06/25 07:12
S17	1	S12 and S16	US-PGPUB; USPAT; USOCR; FPRS; EPO; JPO; DERWENT; IBM_TDB	OR	ON	2018/06/25 07:12

6/25/2018 2:21:27 PM
C:\Users\aarora\Documents\EAST\Workspaces\15590282.wsp

Doc code: IDS
Doc description: Information Disclosure Statement (IDS) Filed

PTO/SB/08a (03-15)
Approved for use through 07/31/2016. OMB 0651-0031
U.S. Patent and Trademark Office; U.S. DEPARTMENT OF COMMERCE
Under the Paperwork Reduction Act of 1995, no persons are required to respond to a collection of information unless it contains a valid OMB control number.

INFORMATION DISCLOSURE STATEMENT BY APPLICANT

(Not for submission under 37 CFR 1.99)

Application Number	15590282
Filing Date	2017-05-09
First Named Inventor	G.R. Mohan Rao
Art Unit	2892
Examiner Name	ARORA, AJAY
Attorney Docket Number	GRTD-33439

U.S.PATENTS Remove

Examiner Initial*	Cite No	Patent Number	Kind Code[1]	Issue Date	Name of Patentee or Applicant of cited Document	Pages,Columns,Lines where Relevant Passages or Relevant Figures Appear
	1	6780713	B2	2004-08-24	BROMBERGER et al.	
	2	6878603	B2	2005-04-12	BROMBERGER et al.	
	3	6933215	B2	2005-08-23	BROMBERGER et al.	
	4	7064385	B2	2006-06-20	DUDEK et al.	
	5	7233044	B2	2007-06-19	DUDEK, Volker	
	6	7504692	B2	2009-03-17	DUDEK et al.	

If you wish to add additional U.S. Patent citation information please click the Add button. Add

U.S.PATENT APPLICATION PUBLICATIONS Remove

Examiner Initial*	Cite No	Publication Number	Kind Code[1]	Publication Date	Name of Patentee or Applicant of cited Document	Pages,Columns,Lines where Relevant Passages or Relevant Figures Appear

ALL REFERENCES CONSIDERED EXCEPT WHERE LINED THROUGH. /A.A/

INFORMATION DISCLOSURE STATEMENT BY APPLICANT

(Not for submission under 37 CFR 1.99)

Application Number	15590282
Filing Date	2017-05-09
First Named Inventor	G.R. Mohan Rao
Art Unit	2892
Examiner Name	ARORA, AJAY
Attorney Docket Number	GRTD-33439

	1				

If you wish to add additional U.S. Published Application citation information please click the Add button. Add

FOREIGN PATENT DOCUMENTS Remove

Examiner Initial*	Cite No	Foreign Document Number[3]	Country Code[2] i	Kind Code[4]	Publication Date	Name of Patentee or Applicant of cited Document	Pages,Columns,Lines where Relevant Passages or Relevant Figures Appear	T[5]
	1							

If you wish to add additional Foreign Patent Document citation information please click the Add button Add

NON-PATENT LITERATURE DOCUMENTS Remove

Examiner Initials*	Cite No	Include name of the author (in CAPITAL LETTERS), title of the article (when appropriate), title of the item (book, magazine, journal, serial, symposium, catalog, etc), date, pages(s), volume-issue number(s), publisher, city and/or country where published.	T[5]
	1		

If you wish to add additional non-patent literature document citation information please click the Add button Add

EXAMINER SIGNATURE

Examiner Signature	/AJAY ARORA/	Date Considered	06/25/2018

*EXAMINER: Initial if reference considered, whether or not citation is in conformance with MPEP 609. Draw line through a citation if not in conformance and not considered. Include copy of this form with next communication to applicant.

[1] See Kind Codes of USPTO Patent Documents at www.USPTO.GOV or MPEP 901.04. [2] Enter office that issued the document, by the two-letter code (WIPO Standard ST.3). [3] For Japanese patent documents, the indication of the year of the reign of the Emperor must precede the serial number of the patent document. [4] Kind of document by the appropriate symbols as indicated on the document under WIPO Standard ST.16 if possible. [5] Applicant is to place a check mark here if English language translation is attached.

ALL REFERENCES CONSIDERED EXCEPT WHERE LINED THROUGH. /A.A/

INFORMATION DISCLOSURE STATEMENT BY APPLICANT

(Not for submission under 37 CFR 1.99)

Application Number	15590282
Filing Date	2017-05-09
First Named Inventor	G.R. Mohan Rao
Art Unit	2892
Examiner Name	ARORA, AJAY
Attorney Docket Number	GRTD-33439

CERTIFICATION STATEMENT

Please see 37 CFR 1.97 and 1.98 to make the appropriate selection(s):

That each item of information contained in the information disclosure statement was first cited in any communication from a foreign patent office in a counterpart foreign application not more than three months prior to the filing of the information disclosure statement. See 37 CFR 1.97(e)(1).

OR

☐ That no item of information contained in the information disclosure statement was cited in a communication from a foreign patent office in a counterpart foreign application, and, to the knowledge of the person signing the certification after making reasonable inquiry, no item of information contained in the information disclosure statement was known to any individual designated in 37 CFR 1.56(c) more than three months prior to the filing of the information disclosure statement. See 37 CFR 1.97(e)(2).

See attached certification statement.

The fee set forth in 37 CFR 1.17 (p) has been submitted herewith.

☒ A certification statement is not submitted herewith.

SIGNATURE

A signature of the applicant or representative is required in accordance with CFR 1.33, 10.18. Please see CFR 1.4(d) for the form of the signature.

Signature	/Keith D. Harden, Reg. #74472/	Date (YYYY-MM-DD)	2017-10-05
Name/Print	Keith D. Harden	Registration Number	74,472

This collection of information is required by 37 CFR 1.97 and 1.98. The information is required to obtain or retain a benefit by the public which is to file (and by the USPTO to process) an application. Confidentiality is governed by 35 U.S.C. 122 and 37 CFR 1.14. This collection is estimated to take 1 hour to complete, including gathering, preparing and submitting the completed application form to the USPTO. Time will vary depending upon the individual case. Any comments on the amount of time you require to complete this form and/or suggestions for reducing this burden, should be sent to the Chief Information Officer, U.S. Patent and Trademark Office, U.S. Department of Commerce, P.O. Box 1450, Alexandria, VA 22313-1450. DO NOT SEND FEES OR COMPLETED FORMS TO THIS ADDRESS. **SEND TO: Commissioner for Patents, P.O. Box 1450, Alexandria, VA 22313-1450.**

Privacy Act Statement

The Privacy Act of 1974 (P.L. 93-579) requires that you be given certain information in connection with your submission of the attached form related to a patent application or patent. Accordingly, pursuant to the requirements of the Act, please be advised that: (1) the general authority for the collection of this information is 35 U.S.C. 2(b)(2); (2) furnishing of the information solicited is voluntary; and (3) the principal purpose for which the information is used by the U.S. Patent and Trademark Office is to process and/or examine your submission related to a patent application or patent. If you do not furnish the requested information, the U.S. Patent and Trademark Office may not be able to process and/or examine your submission, which may result in termination of proceedings or abandonment of the application or expiration of the patent.

The information provided by you in this form will be subject to the following routine uses:

1. The information on this form will be treated confidentially to the extent allowed under the Freedom of Information Act (5 U.S.C. 552) and the Privacy Act (5 U.S.C. 552a). Records from this system of records may be disclosed to the Department of Justice to determine whether the Freedom of Information Act requires disclosure of these record s.

2. A record from this system of records may be disclosed, as a routine use, in the course of presenting evidence to a court, magistrate, or administrative tribunal, including disclosures to opposing counsel in the course of settlement negotiations.

3. A record in this system of records may be disclosed, as a routine use, to a Member of Congress submitting a request involving an individual, to whom the record pertains, when the individual has requested assistance from the Member with respect to the subject matter of the record.

4. A record in this system of records may be disclosed, as a routine use, to a contractor of the Agency having need for the information in order to perform a contract. Recipients of information shall be required to comply with the requirements of the Privacy Act of 1974, as amended, pursuant to 5 U.S.C. 552a(m).

5. A record related to an International Application filed under the Patent Cooperation Treaty in this system of records may be disclosed, as a routine use, to the International Bureau of the World Intellectual Property Organization, pursuant to the Patent Cooperation Treaty.

6. A record in this system of records may be disclosed, as a routine use, to another federal agency for purposes of National Security review (35 U.S.C. 181) and for review pursuant to the Atomic Energy Act (42 U.S.C. 218(c)).

7. A record from this system of records may be disclosed, as a routine use, to the Administrator, General Services, or his/her designee, during an inspection of records conducted by GSA as part of that agency's responsibility to recommend improvements in records management practices and programs, under authority of 44 U.S.C. 2904 and 2906. Such disclosure shall be made in accordance with the GSA regulations governing inspection of records for this purpose, and any other relevant (i.e., GSA or Commerce) directive. Such disclosure shall not be used to make determinations about individuals.

8. A record from this system of records may be disclosed, as a routine use, to the public after either publication of the application pursuant to 35 U.S.C. 122(b) or issuance of a patent pursuant to 35 U.S.C. 151. Further, a record may be disclosed, subject to the limitations of 37 CFR 1.14, as a routine use, to the public if the record was filed in an application which became abandoned or in which the proceedings were terminated and which application is referenced by either a published application, an application open to public inspections or an issued patent.

9. A record from this system of records may be disclosed, as a routine use, to a Federal, State, or local law enforcement agency, if the USPTO becomes aware of a violation or potential violation of law or regulation.

Doc code: IDS
Doc description: Information Disclosure Statement (IDS) Filed

PTO/SB/08a (01-10)
Approved for use through 07/31/2012. OMB 0651-0031
U.S. Patent and Trademark Office; U.S. DEPARTMENT OF COMMERCE
Under the Paperwork Reduction Act of 1995, no persons are required to respond to a collection of information unless it contains a valid OMB control number.

INFORMATION DISCLOSURE STATEMENT BY APPLICANT

(Not for submission under 37 CFR 1.99)

Application Number	15590282
Filing Date	2017-05-09
First Named Inventor	G.R. Mohan Rao
Art Unit	2892
Examiner Name	ARORA, AJAY
Attorney Docket Number	GRTD-33439

U.S.PATENTS Remove

Examiner Initial*	Cite No	Patent Number	Kind Code[1]	Issue Date	Name of Patentee or Applicant of cited Document	Pages,Columns,Lines where Relevant Passages or Relevant Figures Appear
	1	4160985		1979-07-10	Kamins et al.	
	2	5448087		1995-09-05	Streit et al.	
	3	5262345		1993-11-16	Nasser et al.	
	4	5973575		1999-10-26	Kamogawa et al.	
	5	5888857		1999-03-30	Zhang et al.	
	6	6720622	B1	2004-04-13	Yu, Ta-Lee	
	7	6310366	B1	2001-10-30	Rhodes et al.	
	8	6465862	B1	2002-10-15	Harris	

ALL REFERENCES CONSIDERED EXCEPT WHERE LINED THROUGH. /A.A/

INFORMATION DISCLOSURE STATEMENT BY APPLICANT (Not for submission under 37 CFR 1.99)		
	Application Number	15590282
	Filing Date	2017-05-09
	First Named Inventor	G.R. Mohan Rao
	Art Unit	2892
	Examiner Name	ARORA, AJAY
	Attorney Docket Number	GRTD-33439

	9	7307327	B2	2007-12-11	Bahl et al.	
	10	7115925	B2	2006-10-03	Rhodes	
	11	8164124	B2	2012-04-24	Liu et al.	
	12	5517052		1996-05-14	Ishaque, Ahmad N.	
	13	6831292	B2	2004-12-14	Currie et al.	
	14	5029277		1991-07-02	Kane, Robert C.	
	15	5637898		1997-06-10	Baliga, Bantval J.	
	16	4347654		1982-09-07	Allen et al.	
	17	4866000		1989-09-12	Okita	
	18	5130262		1992-07-14	Masquelier et al.	
	19	5213988		1993-05-25	Yamauchi et al.	

ALL REFERENCES CONSIDERED EXCEPT WHERE LINED THROUGH. /A.A/

INFORMATION DISCLOSURE STATEMENT BY APPLICANT (Not for submission under 37 CFR 1.99)		
	Application Number	15590282
	Filing Date	2017-05-09
	First Named Inventor	G.R. Mohan Rao
	Art Unit	2892
	Examiner Name	ARORA, AJAY
	Attorney Docket Number	GRTD-33439

	20	5329144		1994-07-12	Luryi	
	21	5480816		1996-01-02	Uga et al.	
	22	5496746		1996-03-05	Matthews, James A.	
	23	5569612		1996-10-29	Frisina et al.	
	24	6211028	B1	2001-04-03	Tsai et al.	
	25	6472715	B1	2002-10-29	Liu et al.	
	26	6683343	B2	2004-01-27	Matsudai et al.	
	27	6696314	B2	2004-02-24	Rhodes	
	28	6706550	B2	2004-03-16	Lee et al.	
	29	6713813	B2	2004-03-30	Marchant	
	30	6921943	B2	2005-07-26	Kenney et al.	

INFORMATION DISCLOSURE STATEMENT BY APPLICANT (Not for submission under 37 CFR 1.99)		
	Application Number	15590282
	Filing Date	2017-05-09
	First Named Inventor	G.R. Mohan Rao
	Art Unit	2892
	Examiner Name	ARORA, AJAY
	Attorney Docket Number	GRTD-33439

	31	6737722	B2	2004-05-18	Yamamoto et al.	
	32	6744117	B2	2004-06-01	Dragon et al.	
	33	6747883	B2	2004-06-08	Yasumura	
	34	6754093	B2	2004-06-22	Lien	
	35	6753202	B2	2004-06-22	Chen et al.	
	36	6756616	B2	2004-06-29	Rhodes, Howard E.	
	37	5575862		1996-11-19	Nishida, Shoji	
	38	5797999		1998-08-25	Sannomiya et al.	
	39	RE37441		2001-11-13	Yamazaki	
	40	6452086	B1	2002-09-17	Muller, Rainer	
	41	6670544	B2	2003-12-30	Kibbel et al.	

INFORMATION DISCLOSURE STATEMENT BY APPLICANT

(Not for submission under 37 CFR 1.99)

Application Number	15590282
Filing Date	2017-05-09
First Named Inventor	G.R. Mohan Rao
Art Unit	2892
Examiner Name	ARORA, AJAY
Attorney Docket Number	GRTD-33439

	42	4001864		1977-01-04	Gibbons, James F.	
	43	4481522		1984-11-06	Jastrzebski et al.	

If you wish to add additional U.S. Patent citation information please click the Add button. Add

U.S.PATENT APPLICATION PUBLICATIONS Remove

Examiner Initial*	Cite No	Publication Number	Kind Code[1]	Publication Date	Name of Patentee or Applicant of cited Document	Pages,Columns,Lines where Relevant Passages or Relevant Figures Appear
	1	20010040622	A1	2001-11-15	Maruyama, Atsushi	
	2	20030030488	A1	2003-02-13	Hueting et al.	
	3	20040027753	A1	2004-02-12	Friedrichs et al.	
	4	20030026126	A1	2003-02-06	Uemura, Tetsuya	
	5	20130001661	A1	2013-01-03	Mao et al.	
	6	20150200314	A1	2015-07-16	Webster	
	7	20020056883	A1	2002-05-16	Baliga, Bantval Jayant	

ALL REFERENCES CONSIDERED EXCEPT WHERE LINED THROUGH. /A.A/

INFORMATION DISCLOSURE STATEMENT BY APPLICANT

(Not for submission under 37 CFR 1.99)

Application Number	15590282
Filing Date	2017-05-09
First Named Inventor	G.R. Mohan Rao
Art Unit	2892
Examiner Name	ARORA, AJAY
Attorney Docket Number	GRTD-33439

	8	20020084430	A1	2002-07-04	Bamji, et al.	
	9	20020102783	A1	2002-08-01	Fujimoto et al.	
	10	20060113592	A1	2006-06-01	Pendharkar et al.	
	11	20030042511	A1	2003-03-06	Rhodes, Howard E.	
	12	20020093281	A1	2002-07-18	Cathey, David A.	
	13	20020134419	A1	2002-09-26	Macris, Chris	
	14	20020074585	A1	2002-06-20	Tsang et al.	
	15	20030030488		2003-02-13	Hueting et al.	

If you wish to add additional U.S. Published Application citation information please click the Add button. Add

FOREIGN PATENT DOCUMENTS Remove

Examiner Initial*	Cite No	Foreign Document Number[3]	Country Code[2] i	Kind Code[4]	Publication Date	Name of Patentee or Applicant of cited Document	Pages,Columns,Lines where Relevant Passages or Relevant Figures Appear	T[5]
	1							

If you wish to add additional Foreign Patent Document citation information please click the Add button Add

ALL REFERENCES CONSIDERED EXCEPT WHERE LINED THROUGH. /A.A/

INFORMATION DISCLOSURE STATEMENT BY APPLICANT

(Not for submission under 37 CFR 1.99)

Application Number	15590282
Filing Date	2017-05-09
First Named Inventor	G.R. Mohan Rao
Art Unit	2892
Examiner Name	ARORA, AJAY
Attorney Docket Number	GRTD-33439

NON-PATENT LITERATURE DOCUMENTS Remove

Examiner Initials*	Cite No	Include name of the author (in CAPITAL LETTERS), title of the article (when appropriate), title of the item (book, magazine, journal, serial, symposium, catalog, etc), date, pages(s), volume-issue number(s), publisher, city and/or country where published.	T[5]
	1	P.D. MOOR, Advanced CMOS-based pixel sensors, https://indico.cern.ch/event/122027/contributions/88236/attachments/69340/99377/FEEimecPdM.pdf, 2011, 41 pages	
	2	E. PARTON, CMOS Sensors, Laser Focus World, http://www.laserfocusworld.com/articles/print/volume-49/issue-10/features/cmos-sensors-cmos-based-specialty-imagers-reach-new-performance-levels.html, October 14, 2013, 5 pages	
	3	Z. CAO, Design of Pixel for High Speed CMOS Image Sensors, http://www.imagesensors.org/Past%20Workshops/2013%20Workshop/2013%20Papers/07-11_072-Cao_paper.pdf, 4 pages	
	4	M. TANENBAUM, BSTJ: Diffused Emitter and Base Silicon Transistors, The Bell System Technical Journal, January 1956, 22 pages, Volume XXXV, https://archive.org/details/bstj35-1-1	
	5	IMEC Image Sensors and Vision Systems, http://www2.imec.be/content/user/File/Brochures/cmos%20imagers%20brochure-april26.pdf, April 2014, 2 pages	
	6	A. S. GROVE, Physics and Technology of Semiconductor Devices, John Wiley Sons, Inc., New York, November 1967	
	7	W. MURRAY BULLIS and W. R. RUNYAN, Influence of Mobility and Lifetime Variations on Drift-Field Effects in Silicon-Junction Devices, IEEE Transactions on Electron Devices, Vol. Ed-14, No. 2, February 1967	
	8	BERINDER BRAR et al., Herb's Bipolar Transistors, IEEE Transactions on Electron Devices, Vol. 48, No. 11, November 2001	

If you wish to add additional non-patent literature document citation information please click the Add button Add

EXAMINER SIGNATURE

Examiner Signature	/AJAY ARORA/	Date Considered	06/25/2018

*EXAMINER: Initial if reference considered, whether or not citation is in conformance with MPEP 609. Draw line through a citation if not in conformance and not considered. Include copy of this form with next communication to applicant.

ALL REFERENCES CONSIDERED EXCEPT WHERE LINED THROUGH. /A.A/

Greenthread Ex. 2069, p. 133 of 199
Semiconductor v. Greenthread
IPR2023-01242

INFORMATION DISCLOSURE STATEMENT BY APPLICANT

(Not for submission under 37 CFR 1.99)

Application Number	15590282
Filing Date	2017-05-09
First Named Inventor	G.R. Mohan Rao
Art Unit	2892
Examiner Name	ARORA, AJAY
Attorney Docket Number	GRTD-33439

[1] See Kind Codes of USPTO Patent Documents at www.USPTO.GOV or MPEP 901.04. [2] Enter office that issued the document, by the two-letter code (WIPO Standard ST.3). [3] For Japanese patent documents, the indication of the year of the reign of the Emperor must precede the serial number of the patent document. [4] Kind of document by the appropriate symbols as indicated on the document under WIPO Standard ST.16 if possible. [5] Applicant is to place a check mark here if English language translation is attached.

INFORMATION DISCLOSURE STATEMENT BY APPLICANT

(Not for submission under 37 CFR 1.99)

Application Number	15590282
Filing Date	2017-05-09
First Named Inventor	G.R. Mohan Rao
Art Unit	2892
Examiner Name	ARORA, AJAY
Attorney Docket Number	GRTD-33439

CERTIFICATION STATEMENT

Please see 37 CFR 1.97 and 1.98 to make the appropriate selection(s):

That each item of information contained in the information disclosure statement was first cited in any communication from a foreign patent office in a counterpart foreign application not more than three months prior to the filing of the information disclosure statement. See 37 CFR 1.97(e)(1).

OR

☐ That no item of information contained in the information disclosure statement was cited in a communication from a foreign patent office in a counterpart foreign application, and, to the knowledge of the person signing the certification after making reasonable inquiry, no item of information contained in the information disclosure statement was known to any individual designated in 37 CFR 1.56(c) more than three months prior to the filing of the information disclosure statement. See 37 CFR 1.97(e)(2).

See attached certification statement.

The fee set forth in 37 CFR 1.17 (p) has been submitted herewith.

☒ A certification statement is not submitted herewith.

SIGNATURE

A signature of the applicant or representative is required in accordance with CFR 1.33, 10.18. Please see CFR 1.4(d) for the form of the signature.

Signature	/Keith D. Harden, Reg. #74472/	Date (YYYY-MM-DD)	2017-08-09
Name/Print	Keith D. Harden	Registration Number	74,472

This collection of information is required by 37 CFR 1.97 and 1.98. The information is required to obtain or retain a benefit by the public which is to file (and by the USPTO to process) an application. Confidentiality is governed by 35 U.S.C. 122 and 37 CFR 1.14. This collection is estimated to take 1 hour to complete, including gathering, preparing and submitting the completed application form to the USPTO. Time will vary depending upon the individual case. Any comments on the amount of time you require to complete this form and/or suggestions for reducing this burden, should be sent to the Chief Information Officer, U.S. Patent and Trademark Office, U.S. Department of Commerce, P.O. Box 1450, Alexandria, VA 22313-1450. DO NOT SEND FEES OR COMPLETED FORMS TO THIS ADDRESS. **SEND TO: Commissioner for Patents, P.O. Box 1450, Alexandria, VA 22313-1450.**

Privacy Act Statement

The Privacy Act of 1974 (P.L. 93-579) requires that you be given certain information in connection with your submission of the attached form related to a patent application or patent. Accordingly, pursuant to the requirements of the Act, please be advised that: (1) the general authority for the collection of this information is 35 U.S.C. 2(b)(2); (2) furnishing of the information solicited is voluntary; and (3) the principal purpose for which the information is used by the U.S. Patent and Trademark Office is to process and/or examine your submission related to a patent application or patent. If you do not furnish the requested information, the U.S. Patent and Trademark Office may not be able to process and/or examine your submission, which may result in termination of proceedings or abandonment of the application or expiration of the patent.

The information provided by you in this form will be subject to the following routine uses:

1. The information on this form will be treated confidentially to the extent allowed under the Freedom of Information Act (5 U.S.C. 552) and the Privacy Act (5 U.S.C. 552a). Records from this system of records may be disclosed to the Department of Justice to determine whether the Freedom of Information Act requires disclosure of these record s.

2. A record from this system of records may be disclosed, as a routine use, in the course of presenting evidence to a court, magistrate, or administrative tribunal, including disclosures to opposing counsel in the course of settlement negotiations.

3. A record in this system of records may be disclosed, as a routine use, to a Member of Congress submitting a request involving an individual, to whom the record pertains, when the individual has requested assistance from the Member with respect to the subject matter of the record.

4. A record in this system of records may be disclosed, as a routine use, to a contractor of the Agency having need for the information in order to perform a contract. Recipients of information shall be required to comply with the requirements of the Privacy Act of 1974, as amended, pursuant to 5 U.S.C. 552a(m).

5. A record related to an International Application filed under the Patent Cooperation Treaty in this system of records may be disclosed, as a routine use, to the International Bureau of the World Intellectual Property Organization, pursuant to the Patent Cooperation Treaty.

6. A record in this system of records may be disclosed, as a routine use, to another federal agency for purposes of National Security review (35 U.S.C. 181) and for review pursuant to the Atomic Energy Act (42 U.S.C. 218(c)).

7. A record from this system of records may be disclosed, as a routine use, to the Administrator, General Services, or his/her designee, during an inspection of records conducted by GSA as part of that agency's responsibility to recommend improvements in records management practices and programs, under authority of 44 U.S.C. 2904 and 2906. Such disclosure shall be made in accordance with the GSA regulations governing inspection of records for this purpose, and any other relevant (i.e., GSA or Commerce) directive. Such disclosure shall not be used to make determinations about individuals.

8. A record from this system of records may be disclosed, as a routine use, to the public after either publication of the application pursuant to 35 U.S.C. 122(b) or issuance of a patent pursuant to 35 U.S.C. 151. Further, a record may be disclosed, subject to the limitations of 37 CFR 1.14, as a routine use, to the public if the record was filed in an application which became abandoned or in which the proceedings were terminated and which application is referenced by either a published application, an application open to public inspections or an issued patent.

9. A record from this system of records may be disclosed, as a routine use, to a Federal, State, or local law enforcement agency, if the USPTO becomes aware of a violation or potential violation of law or regulation.

PTO/SB/08a (03-15)
Approved for use through 07/31/2016. OMB 0651-0031
U.S. Patent and Trademark Office; U.S. DEPARTMENT OF COMMERCE
Under the Paperwork Reduction Act of 1995, no persons are required to respond to a collection of information unless it contains a valid OMB control number.

INFORMATION DISCLOSURE STATEMENT BY APPLICANT

(Not for submission under 37 CFR 1.99)

Application Number	15590282
Filing Date	2017-05-09
First Named Inventor	G.R. Mohan Rao
Art Unit	2892
Examiner Name	ARORA, AJAY
Attorney Docket Number	GRTD-33439

U.S.PATENTS Remove

Examiner Initial*	Cite No	Patent Number	Kind Code[1]	Issue Date	Name of Patentee or Applicant of cited Document	Pages,Columns,Lines where Relevant Passages or Relevant Figures Appear
	1	6780713	B2	2004-08-24	BROMBERGER et al.	
	2	6878603	B2	2005-04-12	BROMBERGER et al.	
	3	6933215	B2	2005-08-23	BROMBERGER et al.	
	4	7064385	B2	2006-06-20	DUDEK et al.	
	5	7233044	B2	2007-06-19	DUDEK, Volker	
	6	7504692	B2	2009-03-17	DUDEK et al.	

If you wish to add additional U.S. Patent citation information please click the Add button. Add

U.S.PATENT APPLICATION PUBLICATIONS Remove

Examiner Initial*	Cite No	Publication Number	Kind Code[1]	Publication Date	Name of Patentee or Applicant of cited Document	Pages,Columns,Lines where Relevant Passages or Relevant Figures Appear

INFORMATION DISCLOSURE STATEMENT BY APPLICANT (Not for submission under 37 CFR 1.99)		
	Application Number	15590282
	Filing Date	2017-05-09
	First Named Inventor	G.R. Mohan Rao
	Art Unit	2892
	Examiner Name	ARORA, AJAY
	Attorney Docket Number	GRTD-33439

	1				

If you wish to add additional U.S. Published Application citation information please click the Add button. Add

FOREIGN PATENT DOCUMENTS Remove

Examiner Initial*	Cite No	Foreign Document Number[3]	Country Code[2] i	Kind Code[4]	Publication Date	Name of Patentee or Applicant of cited Document	Pages,Columns,Lines where Relevant Passages or Relevant Figures Appear	T[5]
	1							

If you wish to add additional Foreign Patent Document citation information please click the Add button Add

NON-PATENT LITERATURE DOCUMENTS Remove

Examiner Initials*	Cite No	Include name of the author (in CAPITAL LETTERS), title of the article (when appropriate), title of the item (book, magazine, journal, serial, symposium, catalog, etc), date, pages(s), volume-issue number(s), publisher, city and/or country where published.	T[5]
	1		

If you wish to add additional non-patent literature document citation information please click the Add button Add

EXAMINER SIGNATURE

Examiner Signature		Date Considered	

*EXAMINER: Initial if reference considered, whether or not citation is in conformance with MPEP 609. Draw line through a citation if not in conformance and not considered. Include copy of this form with next communication to applicant.

[1] See Kind Codes of USPTO Patent Documents at www.USPTO.GOV or MPEP 901.04. [2] Enter office that issued the document, by the two-letter code (WIPO Standard ST.3). [3] For Japanese patent documents, the indication of the year of the reign of the Emperor must precede the serial number of the patent document. [4] Kind of document by the appropriate symbols as indicated on the document under WIPO Standard ST.16 if possible. [5] Applicant is to place a check mark here if English language translation is attached.

INFORMATION DISCLOSURE STATEMENT BY APPLICANT (Not for submission under 37 CFR 1.99)		
	Application Number	15590282
	Filing Date	2017-05-09
	First Named Inventor	G.R. Mohan Rao
	Art Unit	2892
	Examiner Name	ARORA, AJAY
	Attorney Docket Number	GRTD-33439

CERTIFICATION STATEMENT

Please see 37 CFR 1.97 and 1.98 to make the appropriate selection(s):

That each item of information contained in the information disclosure statement was first cited in any communication from a foreign patent office in a counterpart foreign application not more than three months prior to the filing of the information disclosure statement. See 37 CFR 1.97(e)(1).

OR

☐ That no item of information contained in the information disclosure statement was cited in a communication from a foreign patent office in a counterpart foreign application, and, to the knowledge of the person signing the certification after making reasonable inquiry, no item of information contained in the information disclosure statement was known to any individual designated in 37 CFR 1.56(c) more than three months prior to the filing of the information disclosure statement. See 37 CFR 1.97(e)(2).

See attached certification statement.

The fee set forth in 37 CFR 1.17 (p) has been submitted herewith.

☒ A certification statement is not submitted herewith.

SIGNATURE

A signature of the applicant or representative is required in accordance with CFR 1.33, 10.18. Please see CFR 1.4(d) for the form of the signature.

Signature	/Keith D. Harden, Reg. #74472/	Date (YYYY-MM-DD)	2017-10-05
Name/Print	Keith D. Harden	Registration Number	74,472

This collection of information is required by 37 CFR 1.97 and 1.98. The information is required to obtain or retain a benefit by the public which is to file (and by the USPTO to process) an application. Confidentiality is governed by 35 U.S.C. 122 and 37 CFR 1.14. This collection is estimated to take 1 hour to complete, including gathering, preparing and submitting the completed application form to the USPTO. Time will vary depending upon the individual case. Any comments on the amount of time you require to complete this form and/or suggestions for reducing this burden, should be sent to the Chief Information Officer, U.S. Patent and Trademark Office, U.S. Department of Commerce, P.O. Box 1450, Alexandria, VA 22313-1450. DO NOT SEND FEES OR COMPLETED FORMS TO THIS ADDRESS. **SEND TO: Commissioner for Patents, P.O. Box 1450, Alexandria, VA 22313-1450.**

Privacy Act Statement

The Privacy Act of 1974 (P.L. 93-579) requires that you be given certain information in connection with your submission of the attached form related to a patent application or patent. Accordingly, pursuant to the requirements of the Act, please be advised that: (1) the general authority for the collection of this information is 35 U.S.C. 2(b)(2); (2) furnishing of the information solicited is voluntary; and (3) the principal purpose for which the information is used by the U.S. Patent and Trademark Office is to process and/or examine your submission related to a patent application or patent. If you do not furnish the requested information, the U.S. Patent and Trademark Office may not be able to process and/or examine your submission, which may result in termination of proceedings or abandonment of the application or expiration of the patent.

The information provided by you in this form will be subject to the following routine uses:

1. The information on this form will be treated confidentially to the extent allowed under the Freedom of Information Act (5 U.S.C. 552) and the Privacy Act (5 U.S.C. 552a). Records from this system of records may be disclosed to the Department of Justice to determine whether the Freedom of Information Act requires disclosure of these record s.

2. A record from this system of records may be disclosed, as a routine use, in the course of presenting evidence to a court, magistrate, or administrative tribunal, including disclosures to opposing counsel in the course of settlement negotiations.

3. A record in this system of records may be disclosed, as a routine use, to a Member of Congress submitting a request involving an individual, to whom the record pertains, when the individual has requested assistance from the Member with respect to the subject matter of the record.

4. A record in this system of records may be disclosed, as a routine use, to a contractor of the Agency having need for the information in order to perform a contract. Recipients of information shall be required to comply with the requirements of the Privacy Act of 1974, as amended, pursuant to 5 U.S.C. 552a(m).

5. A record related to an International Application filed under the Patent Cooperation Treaty in this system of records may be disclosed, as a routine use, to the International Bureau of the World Intellectual Property Organization, pursuant to the Patent Cooperation Treaty.

6. A record in this system of records may be disclosed, as a routine use, to another federal agency for purposes of National Security review (35 U.S.C. 181) and for review pursuant to the Atomic Energy Act (42 U.S.C. 218(c)).

7. A record from this system of records may be disclosed, as a routine use, to the Administrator, General Services, or his/her designee, during an inspection of records conducted by GSA as part of that agency's responsibility to recommend improvements in records management practices and programs, under authority of 44 U.S.C. 2904 and 2906. Such disclosure shall be made in accordance with the GSA regulations governing inspection of records for this purpose, and any other relevant (i.e., GSA or Commerce) directive. Such disclosure shall not be used to make determinations about individuals.

8. A record from this system of records may be disclosed, as a routine use, to the public after either publication of the application pursuant to 35 U.S.C. 122(b) or issuance of a patent pursuant to 35 U.S.C. 151. Further, a record may be disclosed, subject to the limitations of 37 CFR 1.14, as a routine use, to the public if the record was filed in an application which became abandoned or in which the proceedings were terminated and which application is referenced by either a published application, an application open to public inspections or an issued patent.

9. A record from this system of records may be disclosed, as a routine use, to a Federal, State, or local law enforcement agency, if the USPTO becomes aware of a violation or potential violation of law or regulation.

Electronic Acknowledgement Receipt

EFS ID:	30569741
Application Number:	15590282
International Application Number:	
Confirmation Number:	1032
Title of Invention:	SEMICONDUCTOR DEVICES WITH GRADED DOPANT REGIONS
First Named Inventor/Applicant Name:	G.R. MOHAN RAO
Customer Number:	25883
Filer:	Keith D. Harden
Filer Authorized By:	
Attorney Docket Number:	GRTD-33439
Receipt Date:	05-OCT-2017
Filing Date:	09-MAY-2017
Time Stamp:	11:05:59
Application Type:	Utility under 35 USC 111(a)

Payment information:

Submitted with Payment	no

File Listing:

Document Number	Document Description	File Name	File Size(Bytes)/ Message Digest	Multi Part /.zip	Pages (if appl.)
1	Information Disclosure Statement (IDS) Form (SB08)	GRT33439IDS2.pdf	1035287 0fb20e8e33626092589fdc5f72d2e4c27263954a	no	4

Warnings:

Information:	
Total Files Size (in bytes):	1035287

This Acknowledgement Receipt evidences receipt on the noted date by the USPTO of the indicated documents, characterized by the applicant, and including page counts, where applicable. It serves as evidence of receipt similar to a Post Card, as described in MPEP 503.

New Applications Under 35 U.S.C. 111
If a new application is being filed and the application includes the necessary components for a filing date (see 37 CFR 1.53(b)-(d) and MPEP 506), a Filing Receipt (37 CFR 1.54) will be issued in due course and the date shown on this Acknowledgement Receipt will establish the filing date of the application.
National Stage of an International Application under 35 U.S.C. 371
If a timely submission to enter the national stage of an international application is compliant with the conditions of 35 U.S.C. 371 and other applicable requirements a Form PCT/DO/EO/903 indicating acceptance of the application as a national stage submission under 35 U.S.C. 371 will be issued in addition to the Filing Receipt, in due course.
New International Application Filed with the USPTO as a Receiving Office
If a new international application is being filed and the international application includes the necessary components for an international filing date (see PCT Article 11 and MPEP 1810), a Notification of the International Application Number and of the International Filing Date (Form PCT/RO/105) will be issued in due course, subject to prescriptions concerning national security, and the date shown on this Acknowledgement Receipt will establish the international filing date of the application.

UNITED STATES PATENT AND TRADEMARK OFFICE

UNITED STATES DEPARTMENT OF COMMERCE
United States Patent and Trademark Office
Address: COMMISSIONER FOR PATENTS
P.O. Box 1450
Alexandria, Virginia 22313-1450
www.uspto.gov

APPLICATION NUMBER	FILING OR 371(C) DATE	FIRST NAMED APPLICANT	ATTY. DOCKET NO./TITLE
15/590,282	05/09/2017	G.R. MOHAN RAO	GRTD-33439

CONFIRMATION NO. 1032

PUBLICATION NOTICE

OC000000093667859

25883
HOWISON & ARNOTT, L.L.P
P.O. BOX 741715
DALLAS, TX 75374-1715

Title:SEMICONDUCTOR DEVICES WITH GRADED DOPANT REGIONS

Publication No.US-2017-0243876-A1
Publication Date:08/24/2017

NOTICE OF PUBLICATION OF APPLICATION

The above-identified application will be electronically published as a patent application publication pursuant to 37 CFR 1.211, et seq. The patent application publication number and publication date are set forth above.

The publication may be accessed through the USPTO's publically available Searchable Databases via the Internet at www.uspto.gov. The direct link to access the publication is currently http://www.uspto.gov/patft/.

The publication process established by the Office does not provide for mailing a copy of the publication to applicant. A copy of the publication may be obtained from the Office upon payment of the appropriate fee set forth in 37 CFR 1.19(a)(1). Orders for copies of patent application publications are handled by the USPTO's Public Records Division. The Public Records Division can be reached by telephone at (571) 272-3150 or (800) 972-6382, by facsimile at (571) 273-3250, by mail addressed to the United States Patent and Trademark Office, Public Records Division, Alexandria, VA 22313-1450 or via the Internet.

In addition, information on the status of the application, including the mailing date of Office actions and the dates of receipt of correspondence filed in the Office, may also be accessed via the Internet through the Patent Electronic Business Center at www.uspto.gov using the public side of the Patent Application Information and Retrieval (PAIR) system. The direct link to access this status information is currently https://portal.uspto.gov/pair/PublicPair. Prior to publication, such status information is confidential and may only be obtained by applicant using the private side of PAIR.

Further assistance in electronically accessing the publication, or about PAIR, is available by calling the Patent Electronic Business Center at 1-866-217-9197.

Office of Data Managment, Application Assistance Unit (571) 272-4000, or (571) 272-4200, or 1-888-786-0101

Greenthread Ex. 2069, p. 143 of 199
Semiconductor v. Greenthread
IPR2023-01242

PTO/SB/08a (01-10)
Approved for use through 07/31/2012. OMB 0651-0031
U.S. Patent and Trademark Office; U.S. DEPARTMENT OF COMMERCE
Under the Paperwork Reduction Act of 1995, no persons are required to respond to a collection of information unless it contains a valid OMB control number.

INFORMATION DISCLOSURE STATEMENT BY APPLICANT

(Not for submission under 37 CFR 1.99)

Application Number	15590282
Filing Date	2017-05-09
First Named Inventor	G.R. Mohan Rao
Art Unit	2892
Examiner Name	ARORA, AJAY
Attorney Docket Number	GRTD-33439

U.S.PATENTS Remove

Examiner Initial*	Cite No	Patent Number	Kind Code[1]	Issue Date	Name of Patentee or Applicant of cited Document	Pages,Columns,Lines where Relevant Passages or Relevant Figures Appear
	1	4160985		1979-07-10	Kamins et al.	
	2	5448087		1995-09-05	Streit et al.	
	3	5262345		1993-11-16	Nasser et al.	
	4	5973575		1999-10-26	Kamogawa et al.	
	5	5888857		1999-03-30	Zhang et al.	
	6	6720622	B1	2004-04-13	Yu, Ta-Lee	
	7	6310366	B1	2001-10-30	Rhodes et al.	
	8	6465862	B1	2002-10-15	Harris	

INFORMATION DISCLOSURE STATEMENT BY APPLICANT (Not for submission under 37 CFR 1.99)	Application Number	15590282
	Filing Date	2017-05-09
	First Named Inventor	G.R. Mohan Rao
	Art Unit	2892
	Examiner Name	ARORA, AJAY
	Attorney Docket Number	GRTD-33439

	9	7307327	B2	2007-12-11	Bahl et al.	
	10	7115925	B2	2006-10-03	Rhodes	
	11	8164124	B2	2012-04-24	Liu et al.	
	12	5517052		1996-05-14	Ishaque, Ahmad N.	
	13	6831292	B2	2004-12-14	Currie et al.	
	14	5029277		1991-07-02	Kane, Robert C.	
	15	5637898		1997-06-10	Baliga, Bantval J.	
	16	4347654		1982-09-07	Allen et al.	
	17	4866000		1989-09-12	Okita	
	18	5130262		1992-07-14	Masquelier et al.	
	19	5213988		1993-05-25	Yamauchi et al.	

INFORMATION DISCLOSURE STATEMENT BY APPLICANT (Not for submission under 37 CFR 1.99)		
	Application Number	15590282
	Filing Date	2017-05-09
	First Named Inventor	G.R. Mohan Rao
	Art Unit	2892
	Examiner Name	ARORA, AJAY
	Attorney Docket Number	GRTD-33439

	20	5329144		1994-07-12	Luryi	
	21	5480816		1996-01-02	Uga et al.	
	22	5496746		1996-03-05	Matthews, James A.	
	23	5569612		1996-10-29	Frisina et al.	
	24	6211028	B1	2001-04-03	Tsai et al.	
	25	6472715	B1	2002-10-29	Liu et al.	
	26	6683343	B2	2004-01-27	Matsudai et al.	
	27	6696314	B2	2004-02-24	Rhodes	
	28	6706550	B2	2004-03-16	Lee et al.	
	29	6713813	B2	2004-03-30	Marchant	
	30	6921943	B2	2005-07-26	Kenney et al.	

INFORMATION DISCLOSURE STATEMENT BY APPLICANT (Not for submission under 37 CFR 1.99)		
	Application Number	15590282
	Filing Date	2017-05-09
	First Named Inventor	G.R. Mohan Rao
	Art Unit	2892
	Examiner Name	ARORA, AJAY
	Attorney Docket Number	GRTD-33439

	31	6737722	B2	2004-05-18	Yamamoto et al.	
	32	6744117	B2	2004-06-01	Dragon et al.	
	33	6747883	B2	2004-06-08	Yasumura	
	34	6754093	B2	2004-06-22	Lien	
	35	6753202	B2	2004-06-22	Chen et al.	
	36	6756616	B2	2004-06-29	Rhodes, Howard E.	
	37	5575862		1996-11-19	Nishida, Shoji	
	38	5797999		1998-08-25	Sannomiya et al.	
	39	RE37441		2001-11-13	Yamazaki	
	40	6452086	B1	2002-09-17	Muller, Rainer	
	41	6670544	B2	2003-12-30	Kibbel et al.	

INFORMATION DISCLOSURE STATEMENT BY APPLICANT (Not for submission under 37 CFR 1.99)		
	Application Number	15590282
	Filing Date	2017-05-09
	First Named Inventor	G.R. Mohan Rao
	Art Unit	2892
	Examiner Name	ARORA, AJAY
	Attorney Docket Number	GRTD-33439

	42	4001864		1977-01-04	Gibbons, James F.	
	43	4481522		1984-11-06	Jastrzebski et al.	

If you wish to add additional U.S. Patent citation information please click the Add button. Add

U.S.PATENT APPLICATION PUBLICATIONS Remove

Examiner Initial*	Cite No	Publication Number	Kind Code[1]	Publication Date	Name of Patentee or Applicant of cited Document	Pages,Columns,Lines where Relevant Passages or Relevant Figures Appear
	1	20010040622	A1	2001-11-15	Maruyama, Atsushi	
	2	20030030488	A1	2003-02-13	Hueting et al.	
	3	20040027753	A1	2004-02-12	Friedrichs et al.	
	4	20030026126	A1	2003-02-06	Uemura, Tetsuya	
	5	20130001661	A1	2013-01-03	Mao et al.	
	6	20150200314	A1	2015-07-16	Webster	
	7	20020056883	A1	2002-05-16	Baliga, Bantval Jayant	

INFORMATION DISCLOSURE STATEMENT BY APPLICANT (Not for submission under 37 CFR 1.99)		
	Application Number	15590282
	Filing Date	2017-05-09
	First Named Inventor	G.R. Mohan Rao
	Art Unit	2892
	Examiner Name	ARORA, AJAY
	Attorney Docket Number	GRTD-33439

	8	20020084430	A1	2002-07-04	Bamji, et al.	
	9	20020102783	A1	2002-08-01	Fujimoto et al.	
	10	20060113592	A1	2006-06-01	Pendharkar et al.	
	11	20030042511	A1	2003-03-06	Rhodes, Howard E.	
	12	20020093281	A1	2002-07-18	Cathey, David A.	
	13	20020134419	A1	2002-09-26	Macris, Chris	
	14	20020074585	A1	2002-06-20	Tsang et al.	
	15	20030030488		2003-02-13	Hueting et al.	

If you wish to add additional U.S. Published Application citation information please click the Add button. Add

FOREIGN PATENT DOCUMENTS Remove

Examiner Initial*	Cite No	Foreign Document Number[3]	Country Code[2] i	Kind Code[4]	Publication Date	Name of Patentee or Applicant of cited Document	Pages,Columns,Lines where Relevant Passages or Relevant Figures Appear	T[5]
	1							

If you wish to add additional Foreign Patent Document citation information please click the Add button Add

INFORMATION DISCLOSURE STATEMENT BY APPLICANT (Not for submission under 37 CFR 1.99)		
	Application Number	15590282
	Filing Date	2017-05-09
	First Named Inventor	G.R. Mohan Rao
	Art Unit	2892
	Examiner Name	ARORA, AJAY
	Attorney Docket Number	GRTD-33439

NON-PATENT LITERATURE DOCUMENTS Remove

Examiner Initials*	Cite No	Include name of the author (in CAPITAL LETTERS), title of the article (when appropriate), title of the item (book, magazine, journal, serial, symposium, catalog, etc), date, pages(s), volume-issue number(s), publisher, city and/or country where published.	T[5]
	1	P.D. MOOR, Advanced CMOS-based pixel sensors, https://indico.cern.ch/event/122027/contributions/88236/attachments/69340/99377/FEEimecPdM.pdf, 2011, 41 pages	
	2	E. PARTON, CMOS Sensors, Laser Focus World, http://www.laserfocusworld.com/articles/print/volume-49/issue-10/features/cmos-sensors-cmos-based-specialty-imagers-reach-new-performance-levels.html, October 14, 2013, 5 pages	
	3	Z. CAO, Design of Pixel for High Speed CMOS Image Sensors, http://www.imagesensors.org/Past%20Workshops/2013%20Workshop/2013%20Papers/07-11_072-Cao_paper.pdf, 4 pages	
	4	M. TANENBAUM, BSTJ: Diffused Emitter and Base Silicon Transistors, The Bell System Technical Journal, January 1956, 22 pages, Volume XXXV, https://archive.org/details/bstj35-1-1	
	5	IMEC Image Sensors and Vision Systems, http://www2.imec.be/content/user/File/Brochures/cmos%20imagers%20brochure-april26.pdf, April 2014, 2 pages	
	6	A. S. GROVE, Physics and Technology of Semiconductor Devices, John Wiley Sons, Inc., New York, November 1967	
	7	W. MURRAY BULLIS and W. R. RUNYAN, Influence of Mobility and Lifetime Variations on Drift-Field Effects in Silicon-Junction Devices, IEEE Transactions on Electron Devices, Vol. Ed-14, No. 2, February 1967	
	8	BERINDER BRAR et al., Herb's Bipolar Transistors, IEEE Transactions on Electron Devices, Vol. 48, No. 11, November 2001	

If you wish to add additional non-patent literature document citation information please click the Add button Add

EXAMINER SIGNATURE

Examiner Signature		Date Considered	

*EXAMINER: Initial if reference considered, whether or not citation is in conformance with MPEP 609. Draw line through a citation if not in conformance and not considered. Include copy of this form with next communication to applicant.

INFORMATION DISCLOSURE STATEMENT BY APPLICANT (Not for submission under 37 CFR 1.99)	Application Number	15590282
	Filing Date	2017-05-09
	First Named Inventor	G.R. Mohan Rao
	Art Unit	2892
	Examiner Name	ARORA, AJAY
	Attorney Docket Number	GRTD-33439

[1] See Kind Codes of USPTO Patent Documents at www.USPTO.GOV or MPEP 901.04. [2] Enter office that issued the document, by the two-letter code (WIPO Standard ST.3). [3] For Japanese patent documents, the indication of the year of the reign of the Emperor must precede the serial number of the patent document. [4] Kind of document by the appropriate symbols as indicated on the document under WIPO Standard ST.16 if possible. [5] Applicant is to place a check mark here if English language translation is attached.

INFORMATION DISCLOSURE STATEMENT BY APPLICANT (Not for submission under 37 CFR 1.99)		
	Application Number	15590282
	Filing Date	2017-05-09
	First Named Inventor	G.R. Mohan Rao
	Art Unit	2892
	Examiner Name	ARORA, AJAY
	Attorney Docket Number	GRTD-33439

CERTIFICATION STATEMENT

Please see 37 CFR 1.97 and 1.98 to make the appropriate selection(s):

That each item of information contained in the information disclosure statement was first cited in any communication from a foreign patent office in a counterpart foreign application not more than three months prior to the filing of the information disclosure statement. See 37 CFR 1.97(e)(1).

OR

☐ That no item of information contained in the information disclosure statement was cited in a communication from a foreign patent office in a counterpart foreign application, and, to the knowledge of the person signing the certification after making reasonable inquiry, no item of information contained in the information disclosure statement was known to any individual designated in 37 CFR 1.56(c) more than three months prior to the filing of the information disclosure statement. See 37 CFR 1.97(e)(2).

See attached certification statement.

The fee set forth in 37 CFR 1.17 (p) has been submitted herewith.

☒ A certification statement is not submitted herewith.

SIGNATURE

A signature of the applicant or representative is required in accordance with CFR 1.33, 10.18. Please see CFR 1.4(d) for the form of the signature.

Signature	/Keith D. Harden, Reg. #74472/	Date (YYYY-MM-DD)	2017-08-09
Name/Print	Keith D. Harden	Registration Number	74,472

This collection of information is required by 37 CFR 1.97 and 1.98. The information is required to obtain or retain a benefit by the public which is to file (and by the USPTO to process) an application. Confidentiality is governed by 35 U.S.C. 122 and 37 CFR 1.14. This collection is estimated to take 1 hour to complete, including gathering, preparing and submitting the completed application form to the USPTO. Time will vary depending upon the individual case. Any comments on the amount of time you require to complete this form and/or suggestions for reducing this burden, should be sent to the Chief Information Officer, U.S. Patent and Trademark Office, U.S. Department of Commerce, P.O. Box 1450, Alexandria, VA 22313-1450. DO NOT SEND FEES OR COMPLETED FORMS TO THIS ADDRESS. **SEND TO: Commissioner for Patents, P.O. Box 1450, Alexandria, VA 22313-1450.**

Privacy Act Statement

The Privacy Act of 1974 (P.L. 93-579) requires that you be given certain information in connection with your submission of the attached form related to a patent application or patent. Accordingly, pursuant to the requirements of the Act, please be advised that: (1) the general authority for the collection of this information is 35 U.S.C. 2(b)(2); (2) furnishing of the information solicited is voluntary; and (3) the principal purpose for which the information is used by the U.S. Patent and Trademark Office is to process and/or examine your submission related to a patent application or patent. If you do not furnish the requested information, the U.S. Patent and Trademark Office may not be able to process and/or examine your submission, which may result in termination of proceedings or abandonment of the application or expiration of the patent.

The information provided by you in this form will be subject to the following routine uses:

1. The information on this form will be treated confidentially to the extent allowed under the Freedom of Information Act (5 U.S.C. 552) and the Privacy Act (5 U.S.C. 552a). Records from this system of records may be disclosed to the Department of Justice to determine whether the Freedom of Information Act requires disclosure of these record s.

2. A record from this system of records may be disclosed, as a routine use, in the course of presenting evidence to a court, magistrate, or administrative tribunal, including disclosures to opposing counsel in the course of settlement negotiations.

3. A record in this system of records may be disclosed, as a routine use, to a Member of Congress submitting a request involving an individual, to whom the record pertains, when the individual has requested assistance from the Member with respect to the subject matter of the record.

4. A record in this system of records may be disclosed, as a routine use, to a contractor of the Agency having need for the information in order to perform a contract. Recipients of information shall be required to comply with the requirements of the Privacy Act of 1974, as amended, pursuant to 5 U.S.C. 552a(m).

5. A record related to an International Application filed under the Patent Cooperation Treaty in this system of records may be disclosed, as a routine use, to the International Bureau of the World Intellectual Property Organization, pursuant to the Patent Cooperation Treaty.

6. A record in this system of records may be disclosed, as a routine use, to another federal agency for purposes of National Security review (35 U.S.C. 181) and for review pursuant to the Atomic Energy Act (42 U.S.C. 218(c)).

7. A record from this system of records may be disclosed, as a routine use, to the Administrator, General Services, or his/her designee, during an inspection of records conducted by GSA as part of that agency's responsibility to recommend improvements in records management practices and programs, under authority of 44 U.S.C. 2904 and 2906. Such disclosure shall be made in accordance with the GSA regulations governing inspection of records for this purpose, and any other relevant (i.e., GSA or Commerce) directive. Such disclosure shall not be used to make determinations about individuals.

8. A record from this system of records may be disclosed, as a routine use, to the public after either publication of the application pursuant to 35 U.S.C. 122(b) or issuance of a patent pursuant to 35 U.S.C. 151. Further, a record may be disclosed, subject to the limitations of 37 CFR 1.14, as a routine use, to the public if the record was filed in an application which became abandoned or in which the proceedings were terminated and which application is referenced by either a published application, an application open to public inspections or an issued patent.

9. A record from this system of records may be disclosed, as a routine use, to a Federal, State, or local law enforcement agency, if the USPTO becomes aware of a violation or potential violation of law or regulation.

Electronic Acknowledgement Receipt

EFS ID:	30033296
Application Number:	15590282
International Application Number:	
Confirmation Number:	1032
Title of Invention:	SEMICONDUCTOR DEVICES WITH GRADED DOPANT REGIONS
First Named Inventor/Applicant Name:	G.R. MOHAN RAO
Customer Number:	25883
Filer:	Keith D. Harden
Filer Authorized By:	
Attorney Docket Number:	GRTD-33439
Receipt Date:	09-AUG-2017
Filing Date:	09-MAY-2017
Time Stamp:	16:15:12
Application Type:	Utility under 35 USC 111(a)

Payment information:

Submitted with Payment	no

File Listing:

Document Number	Document Description	File Name	File Size(Bytes)/ Message Digest	Multi Part /.zip	Pages (if appl.)
1	Information Disclosure Statement (IDS) Form (SB08)	GRT33439IDS.pdf	615002 61eb564782cabc4140a494f64386ff6040f32c9b	no	10

Warnings:

Information:					
2	Non Patent Literature	1AdvancedCmosMOOR.pdf	2169139 204d9c191c556d94cb3d9a99cc37d9fe04853a55	no	41
Warnings:					
Information:					
3	Non Patent Literature	2CMOSSensorsPARTON.pdf	98815 46e37dd079fc337e98cb31ef5d9021e4ca19b94b	no	5
Warnings:					
Information:					
4	Non Patent Literature	3DesignOfPixelCAO.pdf	512913 92b759662a558bd91570464da2fa9cea58250d84	no	4
Warnings:					
Information:					
5	Non Patent Literature	4DiffusedEmitterTANENBAUM.pdf	6581105 d0610cd63c381df2a5b7756f51b44f36444973e3	no	22
Warnings:					
Information:					
6	Non Patent Literature	5IMECsImageSensor.pdf	860676 70933a602fbe7c55f2d2202df771e359c156ebef	no	2
Warnings:					
Information:					
7	Non Patent Literature	6PhysicsAndTechnologyOfSemiconductorDevicesGROVE.pdf	2482002 59141850559b7b8d474174d0e7c6126c040b70bb	no	3
Warnings:					
Information:					
8	Non Patent Literature	7InfluenceOfMobilityAndLifetimeVariationsOnDriftFieldEffectsBULLIS.pdf	12041888 9cdcf336e27ff9e078ce725ce74f71c99f05a269	no	7
Warnings:					
Information:					

9	Non Patent Literature	8HerbsBipolarTransistorsBRAR.pdf	8424854 997f31e47ae687b547c92bb61ae5244295f16fcc	no	4
Warnings:					
Information:					
			Total Files Size (in bytes):	33786394	

This Acknowledgement Receipt evidences receipt on the noted date by the USPTO of the indicated documents, characterized by the applicant, and including page counts, where applicable. It serves as evidence of receipt similar to a Post Card, as described in MPEP 503.

<u>New Applications Under 35 U.S.C. 111</u>
If a new application is being filed and the application includes the necessary components for a filing date (see 37 CFR 1.53(b)-(d) and MPEP 506), a Filing Receipt (37 CFR 1.54) will be issued in due course and the date shown on this Acknowledgement Receipt will establish the filing date of the application.
<u>National Stage of an International Application under 35 U.S.C. 371</u>
If a timely submission to enter the national stage of an international application is compliant with the conditions of 35 U.S.C. 371 and other applicable requirements a Form PCT/DO/EO/903 indicating acceptance of the application as a national stage submission under 35 U.S.C. 371 will be issued in addition to the Filing Receipt, in due course.
<u>New International Application Filed with the USPTO as a Receiving Office</u>
If a new international application is being filed and the international application includes the necessary components for an international filing date (see PCT Article 11 and MPEP 1810), a Notification of the International Application Number and of the International Filing Date (Form PCT/RO/105) will be issued in due course, subject to prescriptions concerning national security, and the date shown on this Acknowledgement Receipt will establish the international filing date of the application.

PATENT APPLICATION FEE DETERMINATION RECORD

Substitute for Form PTO-875

Application or Docket Number
15/590,282

APPLICATION AS FILED - PART I

FOR	(Column 1) NUMBER FILED	(Column 2) NUMBER EXTRA	SMALL ENTITY RATE($)	SMALL ENTITY FEE($)	OR	OTHER THAN SMALL ENTITY RATE($)	OTHER THAN SMALL ENTITY FEE($)
BASIC FEE (37 CFR 1.16(a), (b), or (c))	N/A	N/A	N/A	70		N/A	
SEARCH FEE (37 CFR 1.16(k), (i), or (m))	N/A	N/A	N/A	300		N/A	
EXAMINATION FEE (37 CFR 1.16(o), (p), or (q))	N/A	N/A	N/A	360		N/A	
TOTAL CLAIMS (37 CFR 1.16(i))	16 minus 20 =	*	x 40 =	0.00	OR		
INDEPENDENT CLAIMS (37 CFR 1.16(h))	2 minus 3 =	*	x 210 =	0.00			
APPLICATION SIZE FEE (37 CFR 1.16(s))	If the specification and drawings exceed 100 sheets of paper, the application size fee due is $310 ($155 for small entity) for each additional 50 sheets or fraction thereof. See 35 U.S.C. 41(a)(1)(G) and 37 CFR 1.16(s).			0.00			
MULTIPLE DEPENDENT CLAIM PRESENT (37 CFR 1.16(j))				0.00			
* If the difference in column 1 is less than zero, enter "0" in column 2.			TOTAL	730		TOTAL	

APPLICATION AS AMENDED - PART II

		(Column 1) CLAIMS REMAINING AFTER AMENDMENT		(Column 2) HIGHEST NUMBER PREVIOUSLY PAID FOR	(Column 3) PRESENT EXTRA	SMALL ENTITY RATE($)	SMALL ENTITY ADDITIONAL FEE($)	OR	OTHER THAN SMALL ENTITY RATE($)	OTHER THAN SMALL ENTITY ADDITIONAL FEE($)
AMENDMENT A	Total (37 CFR 1.16(i))	*	Minus	**	=	x =		OR	x =	
AMENDMENT A	Independent (37 CFR 1.16(h))	*	Minus	***	=	x =		OR	x =	
AMENDMENT A	Application Size Fee (37 CFR 1.16(s))									
AMENDMENT A	FIRST PRESENTATION OF MULTIPLE DEPENDENT CLAIM (37 CFR 1.16(j))							OR		
						TOTAL ADD'L FEE		OR	TOTAL ADD'L FEE	

		(Column 1) CLAIMS REMAINING AFTER AMENDMENT		(Column 2) HIGHEST NUMBER PREVIOUSLY PAID FOR	(Column 3) PRESENT EXTRA	RATE($)	ADDITIONAL FEE($)		RATE($)	ADDITIONAL FEE($)
AMENDMENT B	Total (37 CFR 1.16(i))	*	Minus	**	=	x =		OR	x =	
AMENDMENT B	Independent (37 CFR 1.16(h))	*	Minus	***	=	x =		OR	x =	
AMENDMENT B	Application Size Fee (37 CFR 1.16(s))									
AMENDMENT B	FIRST PRESENTATION OF MULTIPLE DEPENDENT CLAIM (37 CFR 1.16(j))							OR		
						TOTAL ADD'L FEE		OR	TOTAL ADD'L FEE	

* If the entry in column 1 is less than the entry in column 2, write "0" in column 3.
** If the "Highest Number Previously Paid For" IN THIS SPACE is less than 20, enter "20".
*** If the "Highest Number Previously Paid For" IN THIS SPACE is less than 3, enter "3".
The "Highest Number Previously Paid For" (Total or Independent) is the highest found in the appropriate box in column 1.

UNITED STATES PATENT AND TRADEMARK OFFICE

UNITED STATES DEPARTMENT OF COMMERCE
United States Patent and Trademark Office
Address: COMMISSIONER FOR PATENTS
P.O. Box 1450
Alexandria, Virginia 22313-1450
www.uspto.gov

APPLICATION NUMBER	FILING or 371(c) DATE	GRP ART UNIT	FIL FEE REC'D	ATTY.DOCKET.NO	TOT CLAIMS	IND CLAIMS
15/590,282	05/09/2017	2811	730	GRTD-33439	16	2

CONFIRMATION NO. 1032

FILING RECEIPT

25883
HOWISON & ARNOTT, L.L.P
P.O. BOX 741715
DALLAS, TX 75374-1715

OC000000091399097

Date Mailed: 05/17/2017

Receipt is acknowledged of this non-provisional patent application. The application will be taken up for examination in due course. Applicant will be notified as to the results of the examination. Any correspondence concerning the application must include the following identification information: the U.S. APPLICATION NUMBER, FILING DATE, NAME OF APPLICANT, and TITLE OF INVENTION. Fees transmitted by check or draft are subject to collection. Please verify the accuracy of the data presented on this receipt. **If an error is noted on this Filing Receipt, please submit a written request for a Filing Receipt Correction. Please provide a copy of this Filing Receipt with the changes noted thereon. If you received a "Notice to File Missing Parts" for this application, please submit any corrections to this Filing Receipt with your reply to the Notice. When the USPTO processes the reply to the Notice, the USPTO will generate another Filing Receipt incorporating the requested corrections**

Inventor(s)

G.R. MOHAN RAO, ALLEN, TX;

Applicant(s)

GREENTHREAD, LLC, DALLAS, TX;

Power of Attorney: The patent practitioners associated with Customer Number 25883

Domestic Priority data as claimed by applicant

This application is a CON of 14/931,636 11/03/2015 PAT 9647070
which is a CON of 14/515,584 10/16/2014 PAT 9190502
which is a CON of 13/854,319 04/01/2013 ABN
which is a CON of 11/622,496 01/12/2007 PAT 8421195
which is a DIV of 10/934,915 09/03/2004 ABN

Foreign Applications for which priority is claimed (You may be eligible to benefit from the **Patent Prosecution Highway** program at the USPTO. Please see http://www.uspto.gov for more information.) - None.
Foreign application information must be provided in an Application Data Sheet in order to constitute a claim to foreign priority. See 37 CFR 1.55 and 1.76.

Permission to Access Application via Priority Document Exchange: Yes

Permission to Access Search Results: Yes

Applicant may provide or rescind an authorization for access using Form PTO/SB/39 or Form PTO/SB/69 as appropriate.

If Required, Foreign Filing License Granted: 05/16/2017

The country code and number of your priority application, to be used for filing abroad under the Paris Convention, is **US 15/590,282**

Projected Publication Date: 08/24/2017

Non-Publication Request: No

Early Publication Request: No
**** SMALL ENTITY ****
Title

SEMICONDUCTOR DEVICES WITH GRADED DOPANT REGIONS

Preliminary Class

257

Statement under 37 CFR 1.55 or 1.78 for AIA (First Inventor to File) Transition Applications: No

PROTECTING YOUR INVENTION OUTSIDE THE UNITED STATES

Since the rights granted by a U.S. patent extend only throughout the territory of the United States and have no effect in a foreign country, an inventor who wishes patent protection in another country must apply for a patent in a specific country or in regional patent offices. Applicants may wish to consider the filing of an international application under the Patent Cooperation Treaty (PCT). An international (PCT) application generally has the same effect as a regular national patent application in each PCT-member country. The PCT process **simplifies** the filing of patent applications on the same invention in member countries, but **does not result** in a grant of "an international patent" and does not eliminate the need of applicants to file additional documents and fees in countries where patent protection is desired.

Almost every country has its own patent law, and a person desiring a patent in a particular country must make an application for patent in that country in accordance with its particular laws. Since the laws of many countries differ in various respects from the patent law of the United States, applicants are advised to seek guidance from specific foreign countries to ensure that patent rights are not lost prematurely.

Applicants also are advised that in the case of inventions made in the United States, the Director of the USPTO must issue a license before applicants can apply for a patent in a foreign country. The filing of a U.S. patent application serves as a request for a foreign filing license. The application's filing receipt contains further information and guidance as to the status of applicant's license for foreign filing.

Applicants may wish to consult the USPTO booklet, "General Information Concerning Patents" (specifically, the section entitled "Treaties and Foreign Patents") for more information on timeframes and deadlines for filing foreign patent applications. The guide is available either by contacting the USPTO Contact Center at 800-786-9199, or it can be viewed on the USPTO website at http://www.uspto.gov/web/offices/pac/doc/general/index.html.

For information on preventing theft of your intellectual property (patents, trademarks and copyrights), you may wish to consult the U.S. Government website, http://www.stopfakes.gov. Part of a Department of Commerce initiative, this website includes self-help "toolkits" giving innovators guidance on how to protect intellectual property in specific countries such as China, Korea and Mexico. For questions regarding patent enforcement issues, applicants may call the U.S. Government hotline at 1-866-999-HALT (1-866-999-4258).

LICENSE FOR FOREIGN FILING UNDER

Title 35, United States Code, Section 184

Title 37, Code of Federal Regulations, 5.11 & 5.15

GRANTED

The applicant has been granted a license under 35 U.S.C. 184, if the phrase "IF REQUIRED, FOREIGN FILING LICENSE GRANTED" followed by a date appears on this form. Such licenses are issued in all applications where the conditions for issuance of a license have been met, regardless of whether or not a license may be required as set forth in 37 CFR 5.15. The scope and limitations of this license are set forth in 37 CFR 5.15(a) unless an earlier license has been issued under 37 CFR 5.15(b). The license is subject to revocation upon written notification. The date indicated is the effective date of the license, unless an earlier license of similar scope has been granted under 37 CFR 5.13 or 5.14.

This license is to be retained by the licensee and may be used at any time on or after the effective date thereof unless it is revoked. This license is automatically transferred to any related applications(s) filed under 37 CFR 1.53(d). This license is not retroactive.

The grant of a license does not in any way lessen the responsibility of a licensee for the security of the subject matter as imposed by any Government contract or the provisions of existing laws relating to espionage and the national security or the export of technical data. Licensees should apprise themselves of current regulations especially with respect to certain countries, of other agencies, particularly the Office of Defense Trade Controls, Department of State (with respect to Arms, Munitions and Implements of War (22 CFR 121-128)); the Bureau of Industry and Security, Department of Commerce (15 CFR parts 730-774); the Office of Foreign AssetsControl, Department of Treasury (31 CFR Parts 500+) and the Department of Energy.

NOT GRANTED

No license under 35 U.S.C. 184 has been granted at this time, if the phrase "IF REQUIRED, FOREIGN FILING LICENSE GRANTED" DOES NOT appear on this form. Applicant may still petition for a license under 37 CFR 5.12, if a license is desired before the expiration of 6 months from the filing date of the application. If 6 months has lapsed from the filing date of this application and the licensee has not received any indication of a secrecy order under 35 U.S.C. 181, the licensee may foreign file the application pursuant to 37 CFR 5.15(b).

SelectUSA

The United States represents the largest, most dynamic marketplace in the world and is an unparalleled location for business investment, innovation, and commercialization of new technologies. The U.S. offers tremendous resources and advantages for those who invest and manufacture goods here. Through SelectUSA, our nation works to promote and facilitate business investment. SelectUSA provides information assistance to the international investor community; serves as an ombudsman for existing and potential investors; advocates on behalf of U.S. cities, states, and regions competing for global investment; and counsels U.S. economic development organizations on investment attraction best practices. To learn more about why the United States is the best country in the world to develop technology, manufacture products, deliver services, and grow your business, visit http://www.SelectUSA.gov or call +1-202-482-6800.

PTO/AIA/82A (07-13)
Approved for use through 11/30/2014. OMB 0651-0051
U.S. Patent and Trademark Office; U.S. DEPARTMENT OF COMMERCE
Under the Paperwork Reduction Act of 1995, no persons are required to respond to a collection of information unless it displays a valid OMB control number.

TRANSMITTAL FOR POWER OF ATTORNEY TO ONE OR MORE REGISTERED PRACTITIONERS

NOTE: This form is to be submitted with the Power of Attorney by Applicant form (PTO/AIA/82B) to identify the application to which the Power of Attorney is directed, in accordance with 37 CFR 1.5, unless the application number and filing date are identified in the Power of Attorney by Applicant form. If neither form PTO/AIA/82A nor form PTO/AIA82B identifies the application to which the Power of Attorney is directed, the Power of Attorney will not be recognized in the application.

Application Number	
Filing Date	
First Named Inventor	RAO, G.R. MOHAN
Title	SEMICONDUCTOR DEVICES WITH GRADED DOPANT REGIONS
Art Unit	
Examiner Name	
Attorney Docket Number	GRTD-33439

SIGNATURE of Applicant or Patent Practitioner

Signature	/Keith D. Harden, Reg. #74472/	Date (Optional)	
Name	Keith D. Harden	Registration Number	74472
Title (if Applicant is a juristic entity)			
Applicant Name (if Applicant is a juristic entity)			

NOTE: This form must be signed in accordance with 37 CFR 1.33. See 37 CFR 1.4(d) for signature requirements and certifications. If more than one applicant, use multiple forms.

☑ *Total of ONE forms are submitted.

This collection of information is required by 37 CFR 1.131, 1.32, and 1.33. The information is required to obtain or retain a benefit by the public which is to file (and by the USPTO to process) an application. Confidentiality is governed by 35 U.S.C. 122 and 37 CFR 1.11 and 1.14. This collection is estimated to take 3 minutes to complete, including gathering, preparing, and submitting the completed application form to the USPTO. Time will vary depending upon the individual case. Any comments on the amount of time you require to complete this form and/or suggestions for reducing this burden, should be sent to the Chief Information Officer, U.S. Patent and Trademark Office, U.S. Department of Commerce, P.O. Box 1450, Alexandria, VA 22313-1450. DO NOT SEND FEES OR COMPLETED FORMS TO THIS ADDRESS. **SEND TO: Commissioner for Patents, P.O. Box 1450, Alexandria, VA 22313-1450.**

If you need assistance in completing the form, call 1-800-PTO-9199 and select option 2.

Doc Code: PA..
Document Description: Power of Attorney

PTO/AIA/82B (07-13)
Approved for use through 11/30/2014. OMB 0651-0031
U.S. Patent and Trademark Office; U.S. DEPARTMENT OF COMMERCE
Under the Paperwork Reduction Act of 1995, no persons are required to respond to a collection of information unless it displays a valid OMB control number

POWER OF ATTORNEY BY APPLICANT

I hereby revoke all previous powers of attorney given in the application identified in either the attached transmittal letter or the boxes below.

Application Number	Filing Date

(Note: The boxes above may be left blank if information is provided on form PTO/AIA/82A.)

☑ I hereby appoint the Patent Practitioner(s) associated with the following Customer Number as my/our attorney(s) or agent(s), and to transact all business in the United States Patent and Trademark Office connected therewith for the application referenced in the attached transmittal letter (form PTO/AIA/82A) or identified above: 25883

OR

☐ I hereby appoint Practitioner(s) named in the attached list (form PTO/AIA/82C) as my/our attorney(s) or agent(s), and to transact all business in the United States Patent and Trademark Office connected therewith for the patent application referenced in the attached transmittal letter (form PTO/AIA/82A) or identified above. (Note: Complete form PTO/AIA/82C.)

Please recognize or change the correspondence address for the application identified in the attached transmittal letter or the boxes above to:

☑ The address associated with the above-mentioned Customer Number

OR

☐ The address associated with Customer Number:

OR

Firm or Individual Name					
Address					
City		State		Zip	
Country					
Telephone		Email			

I am the Applicant (if the Applicant is a juristic entity, list the Applicant name in the box):

GREENTHREAD, LLC

☐ Inventor or Joint Inventor (title not required below)

☐ Legal Representative of a Deceased or Legally Incapacitated Inventor (title not required below)

☑ Assignee or Person to Whom the Inventor is Under an Obligation to Assign (provide signer's title if applicant is a juristic entity)

☐ Person Who Otherwise Shows Sufficient Proprietary Interest (e.g., a petition under 37 CFR 1.46(b)(2) was granted in the application or is concurrently being filed with this document) (provide signer's title if applicant is a juristic entity)

SIGNATURE of Applicant for Patent

The undersigned (whose title is supplied below) is authorized to act on behalf of the applicant (e.g., where the applicant is a juristic entity).

Signature		Date (Optional)	5/28/2016
Name	Philip W. John Jr.		
Title	PRESIDENT GREENTHREAD, LLC		

NOTE: Signature - This form must be signed by the applicant in accordance with 37 CFR 1.33. See 37 CFR 1.4 for signature requirements and certifications. If more than one applicant, use multiple forms.

☑ Total of ONE forms are submitted.

This collection of information is required by 37 CFR 1.131, 1.32, and 1.33. The information is required to obtain or retain a benefit by the public which is to file (and by the USPTO to process) an application. Confidentiality is governed by 35 U.S.C. 122 and 37 CFR 1.11 and 1.14. This collection is estimated to take 3 minutes to complete, including gathering, preparing, and submitting the completed application form to the USPTO. Time will vary depending upon the individual case. Any comments on the amount of time you require to complete this form and/or suggestions for reducing this burden, should be sent to the Chief Information Officer, U.S. Patent and Trademark Office, U.S. Department of Commerce, P.O. Box 1450, Alexandria, VA 22313-1450. DO NOT SEND FEES OR COMPLETED FORMS TO THIS ADDRESS. **SEND TO: Commissioner for Patents, P.O. Box 1450, Alexandria, VA 22313-1450.**

If you need assistance in completing the form, call 1-800-PTO-9199 and select option 2.

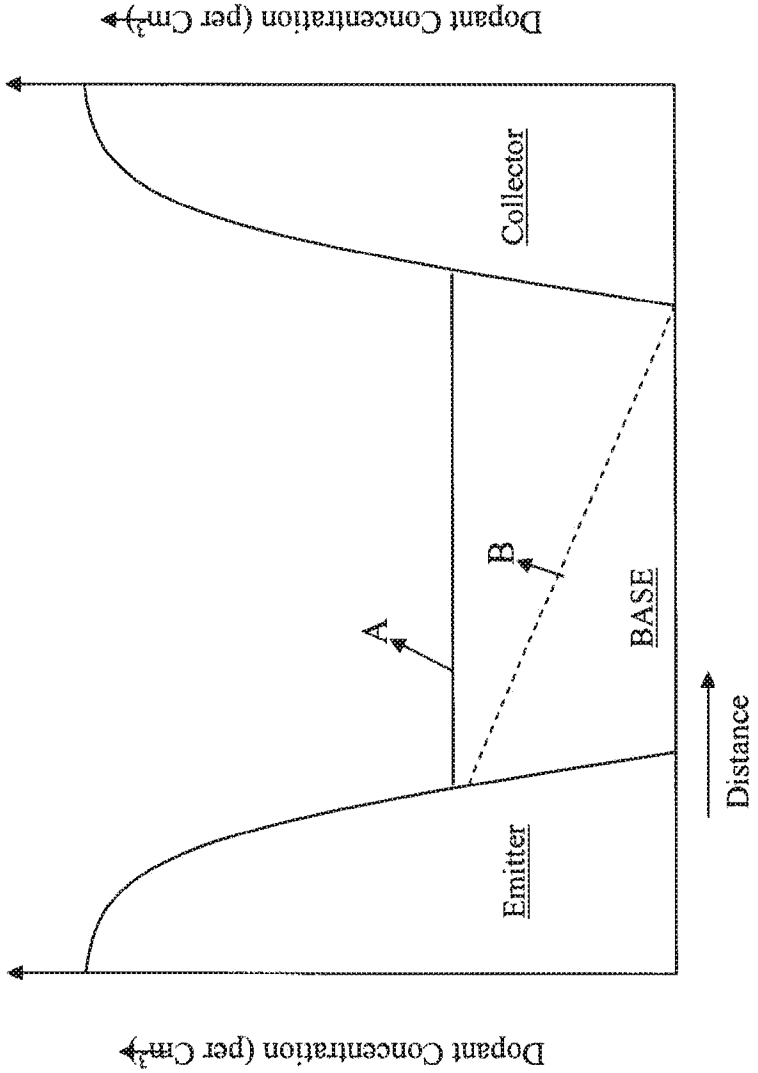

Figure 1 Prior Art

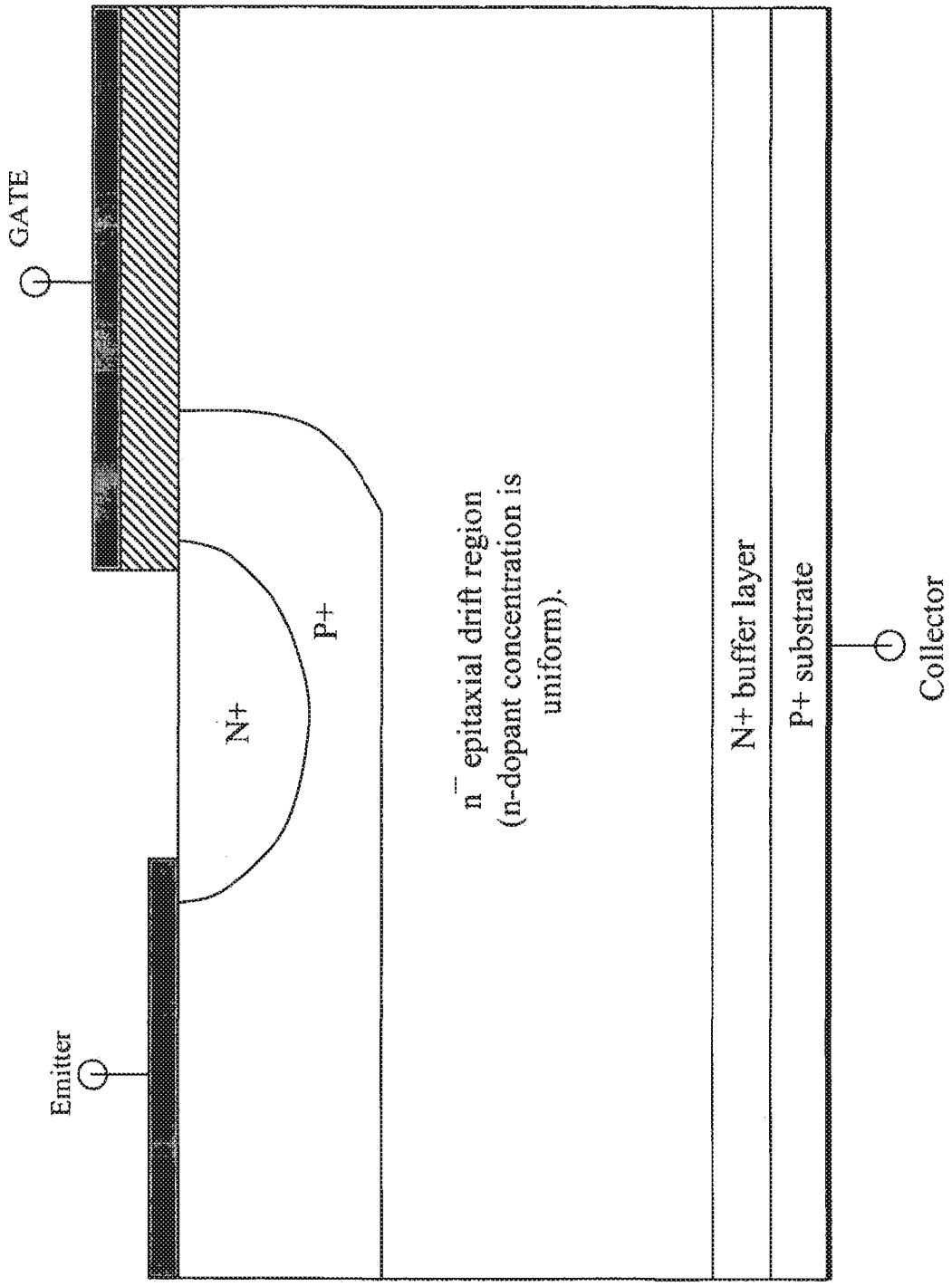

FIGURE 2 Prior art

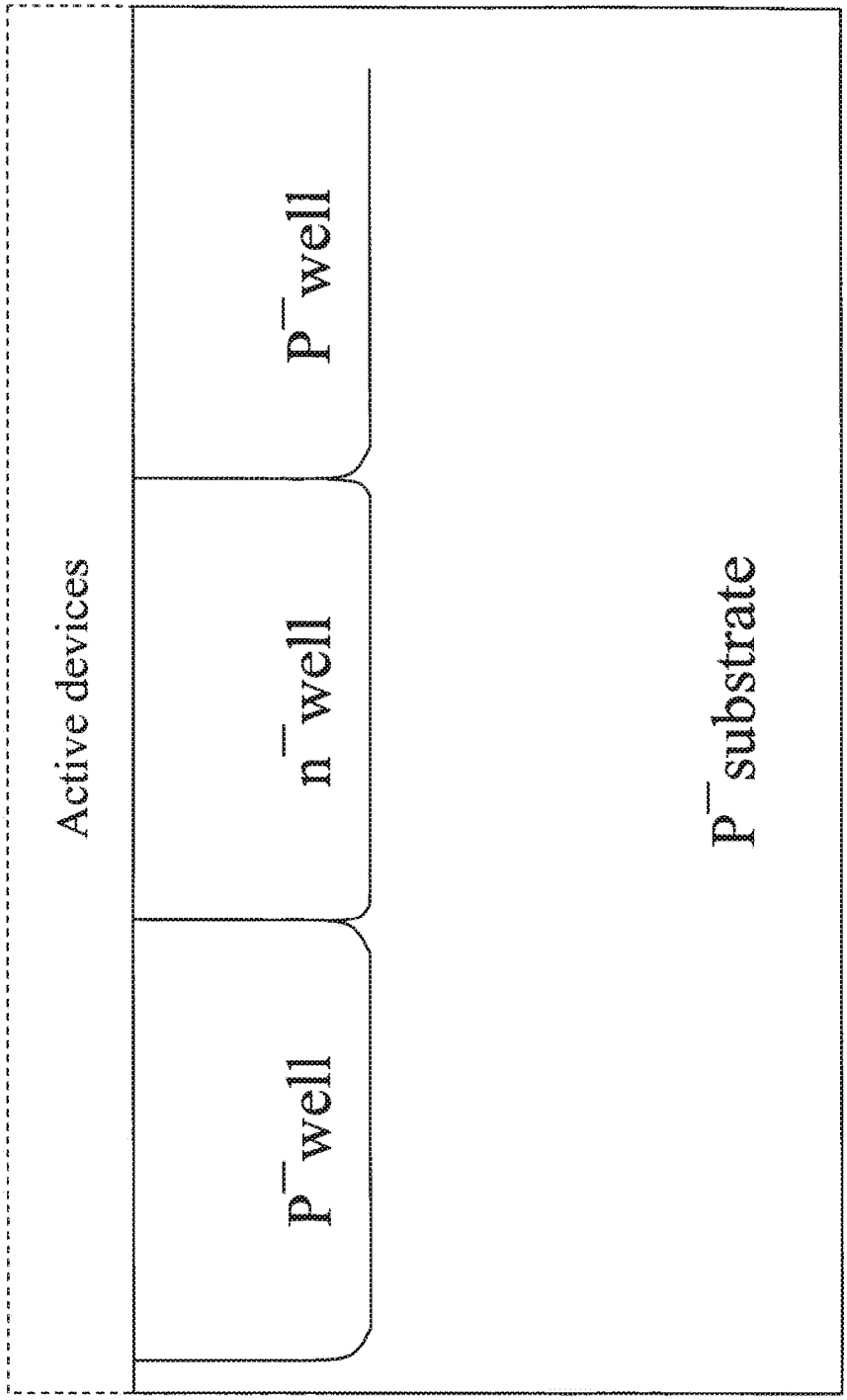

FIGURE 3A Prior art (Twin well CMOS) for a CMOS integrated circuit

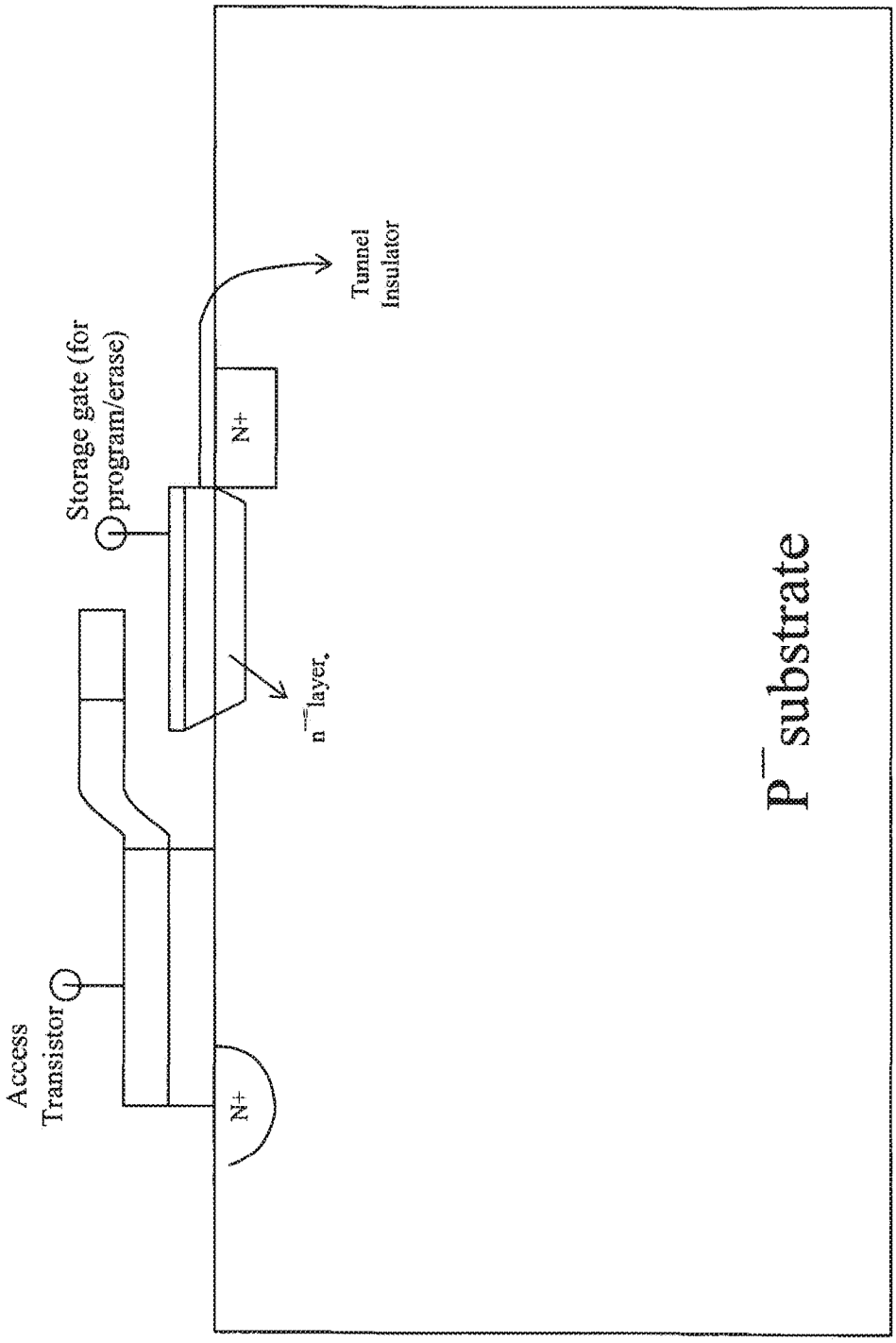

FIGURE 3B Prior art for a two-device EEPROM memory cell

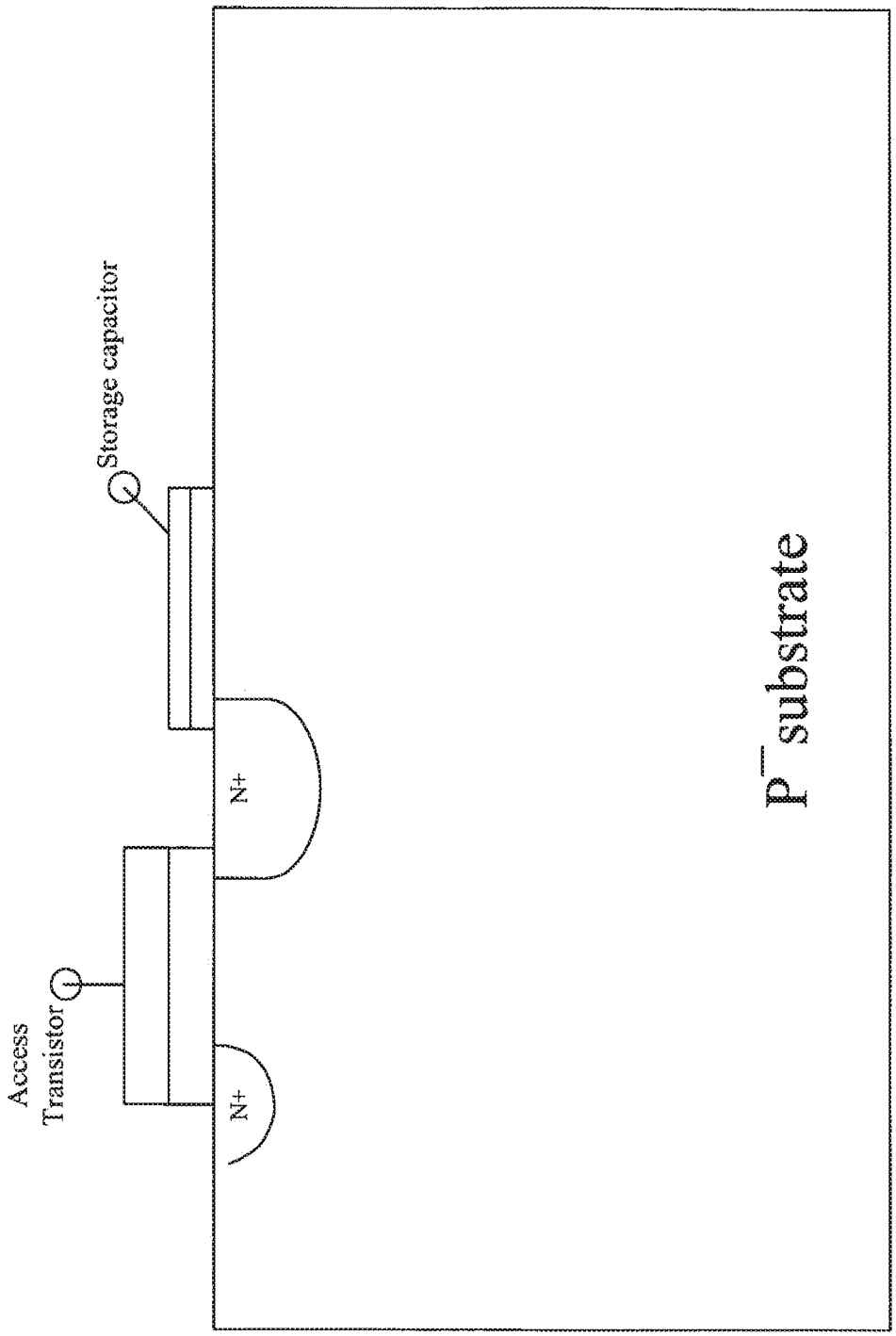

FIGURE 3C Prior art for a 1T-1C DRAM memory cell

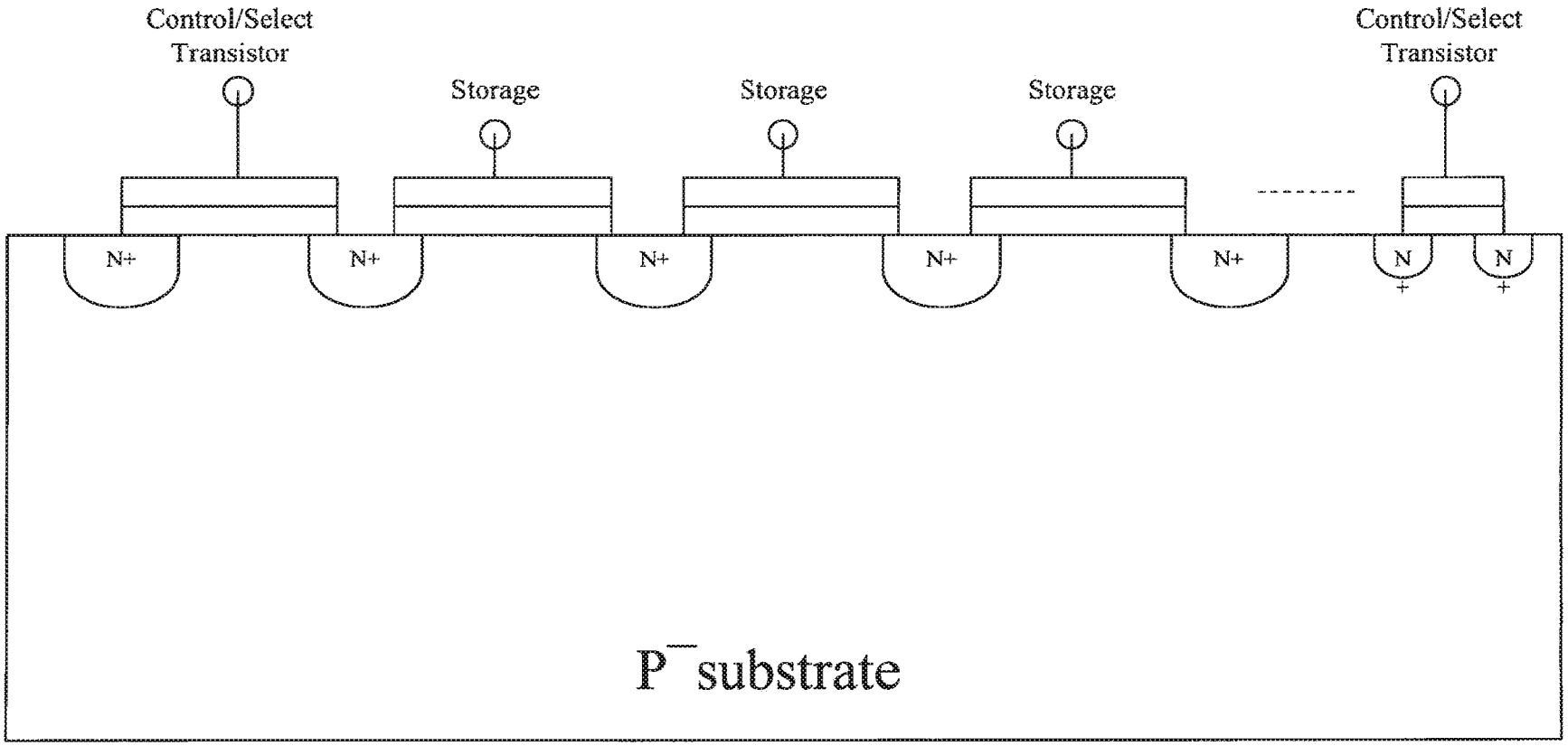

FIGURE 3D Prior art for a NAND flash memory cell

Note: Control/ Sect transistors have a single insulator - traditional MOS transistor.
Storage nodes have a stacked gate structure, typically with a floating gate and control gate comprising the stack.

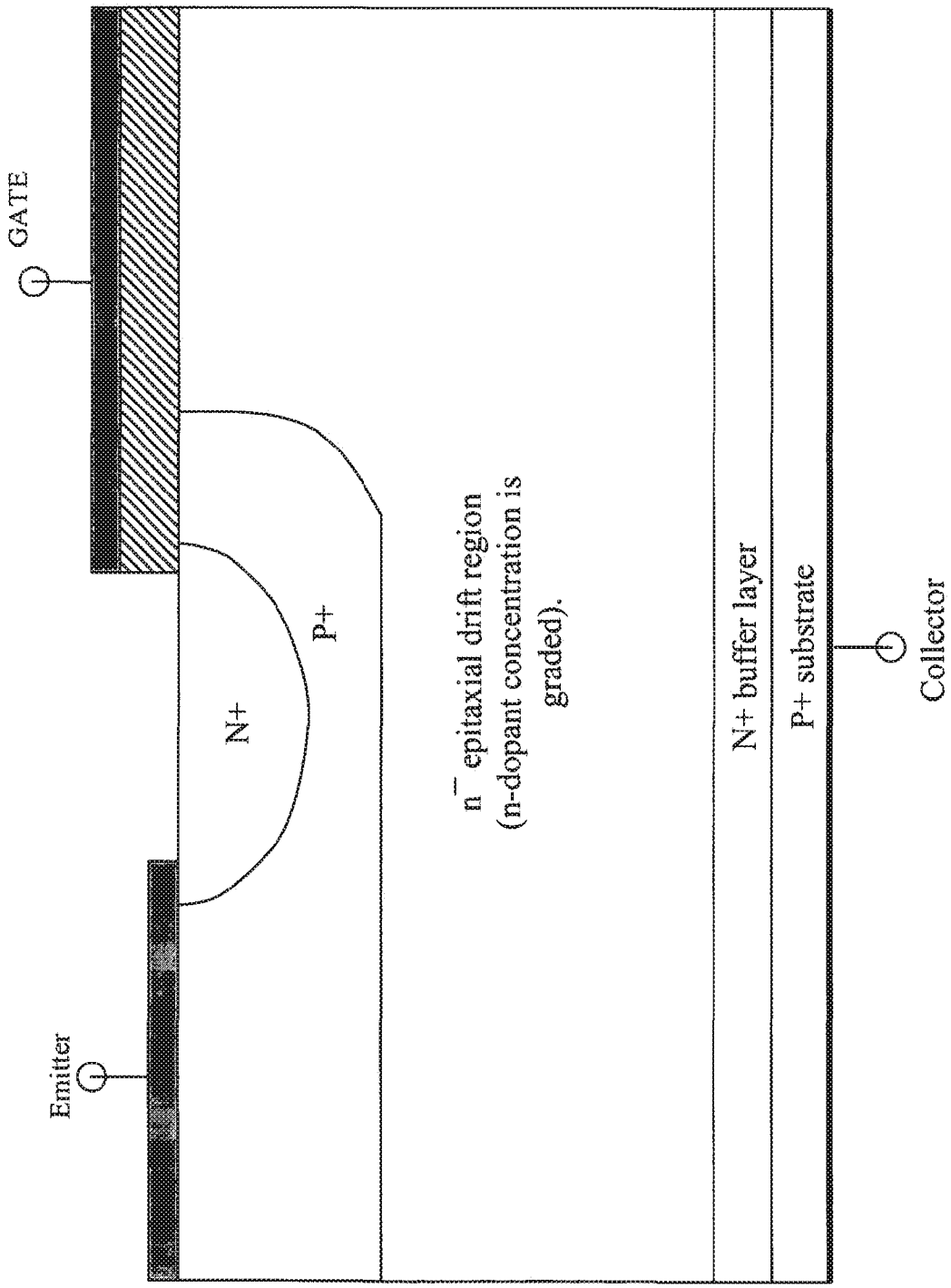

FIGURE 4 A dopant - concentration grinded drift region in a IGBT

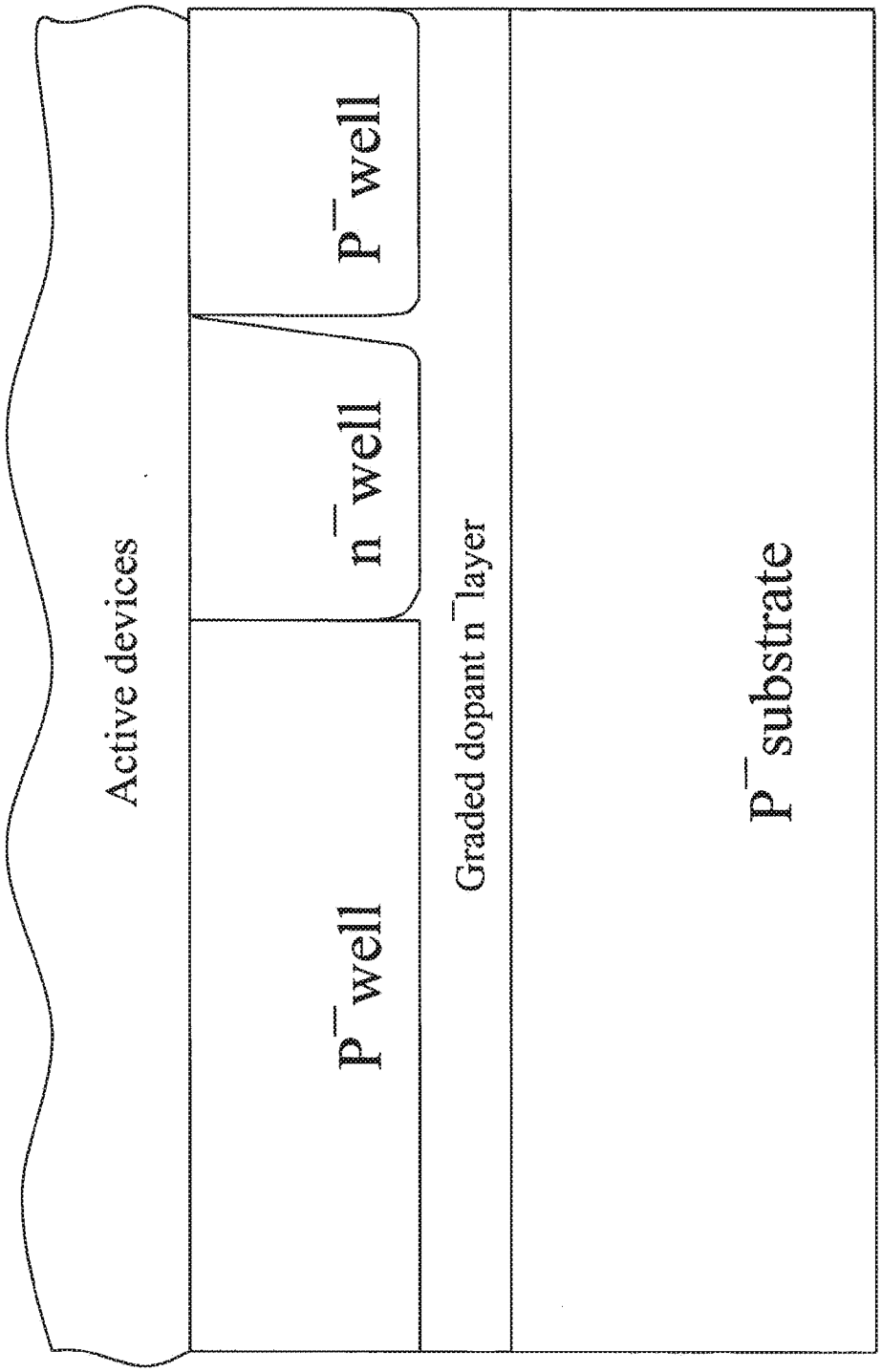

FIGURE 5A A CMOS Substrate for digital, mixed, signal, and senors IC's

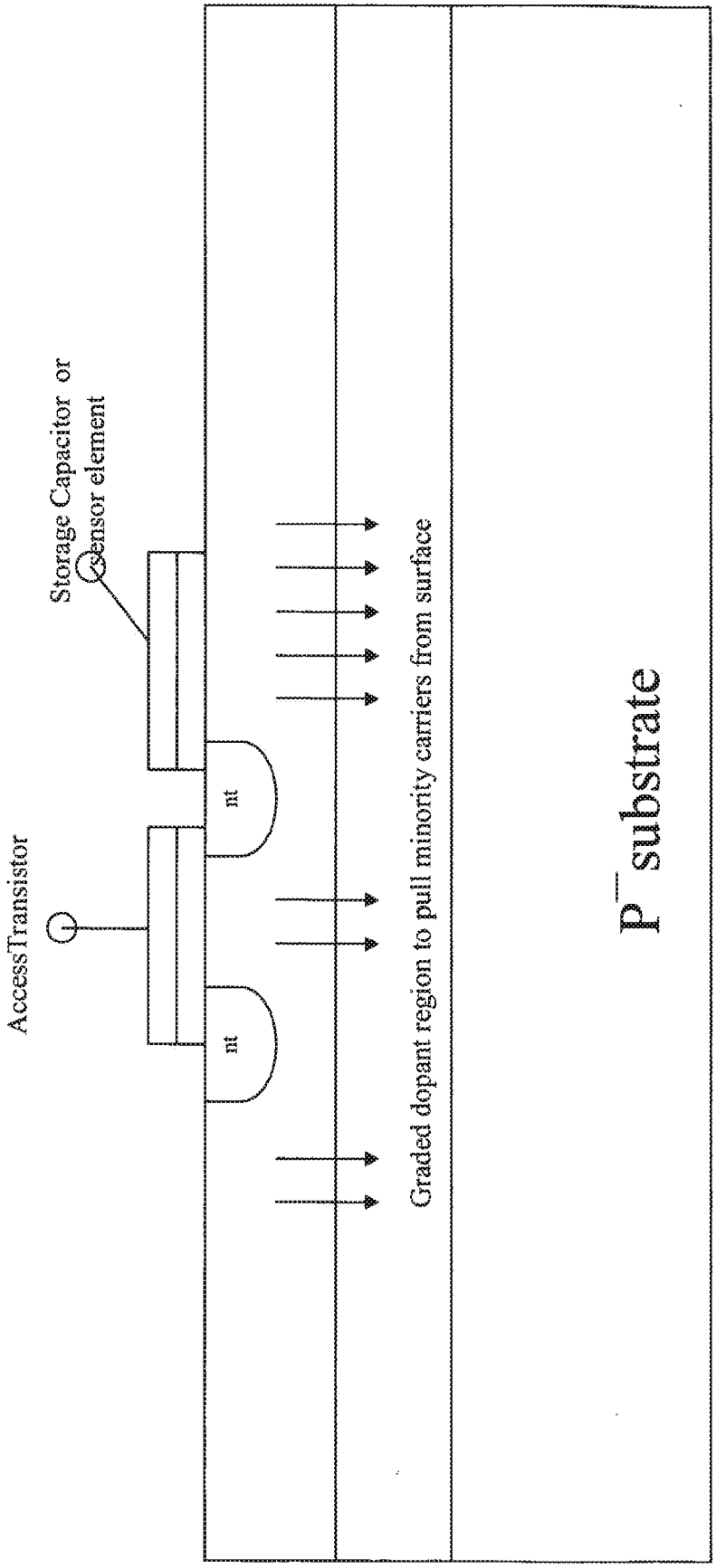

FIGURE 5B CMOS Substrate for a DRAM or image sensor, with one embodiment of the invention

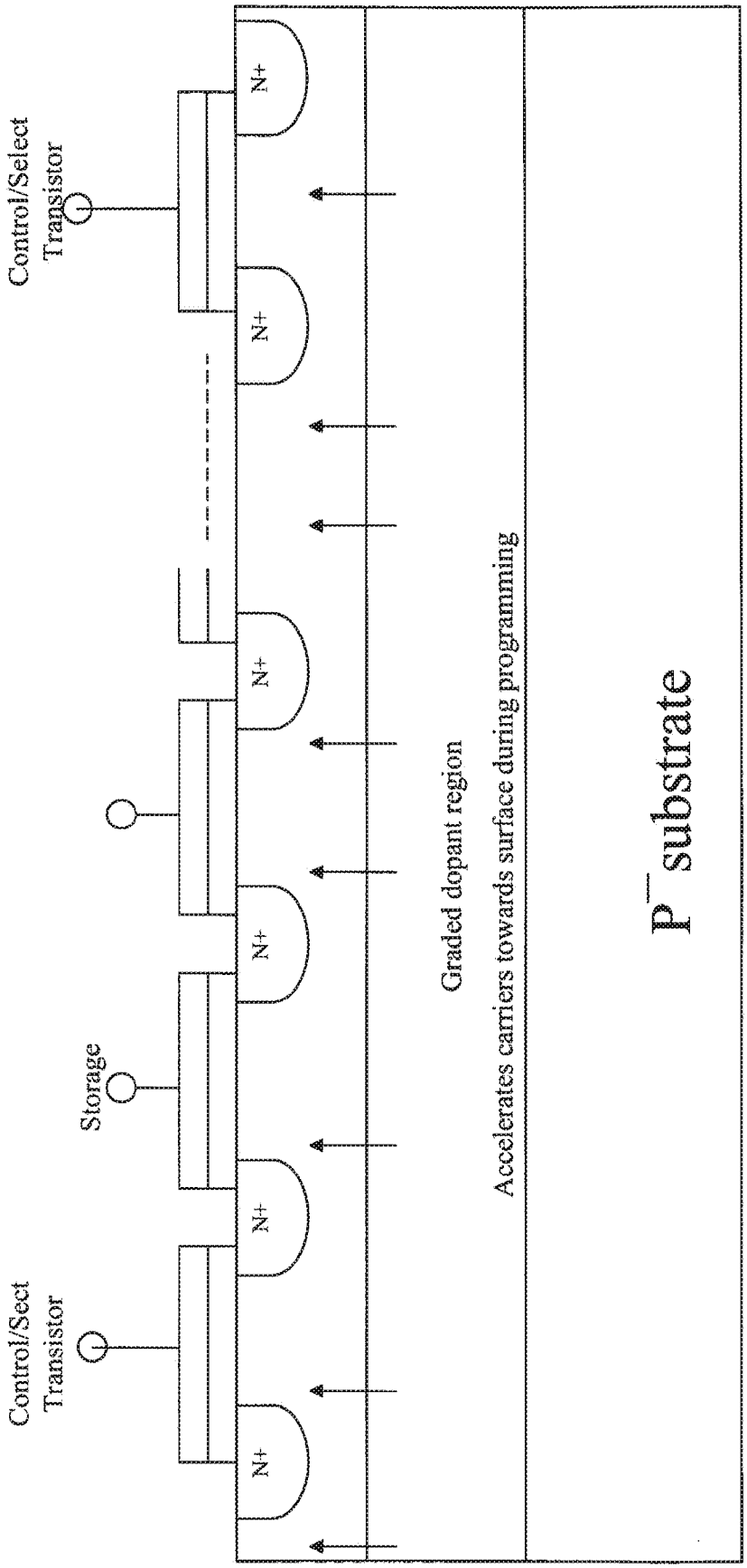

FIGURE 5C CMOS Substrate for a NAND flash device to improve programming times

IN THE UNITED STATES PATENT AND TRADEMARK OFFICE
APPLICATION FOR UNITED STATES PATENT

SEMICONDUCTOR DEVICES WITH GRADED DOPANT REGIONS

Inventor:

G. R. Mohan Rao, Allen, TX

Attorneys:
Howison & Arnott, L.L.P.
P.O. Box 741715
Dallas, Texas 75374-1715

Greenthread Ex. 2069, p. 173 of 199
Semiconductor v. Greenthread
IPR2023-01242

IN THE UNITED STATES PATENT AND TRADEMARK OFFICE

SEMICONDUCTOR DEVICES WITH GRADED DOPANT REGIONS

CROSS-REFERENCE TO RELATED APPLICATIONS

[0001] This application is a Continuation of U.S. Patent Application No. 14/931,636, filed November 3, 2015, published on June 16, 2016 as U.S. Publication No. 2016-0172447, now U.S. Patent No. 9,647,070, issued on May 9, 2017. Application No. 14/931,636 is a continuation of U.S. Patent Application No. 14/515,584, filed October 16, 2014, published on February 5, 2015, as U.S. Publication No. 2015-0035004, now U.S. Patent No. 9,190,502, issued on November 17, 2015, (GRTD-32613). Application No. 14/515,584 is a Continuation of U.S. Patent Application No. 13/854,319 filed April 1, 2013, published on August 29, 2013, as U.S. Publication No. 2013-0221488 (GRTD-32626). Application No. 13/854,319 is a Continuation of 11/622,496, filed January 12, 2007, published on July 12, 2007, as Publication No. 2007-0158790, now U.S. Patent No. 8,421,195, issued on April 16, 2013 (GRTD-32611). Application No. 11/622,496, is a Division of U.S. Patent Application No. 10/934,915, filed September 3, 2004, published on March 9, 2006, as U.S. Publication No. 2006-0049464 (GRTD-32625). Patent Nos. 9,647,070, 9,190,502, and 8,421,195, and Patent Application Publication Nos. 2016-0172447, 2015-0035004, 2013-0221488, 2007-0158790, and 2006-0049464, are incorporated herein by reference in their entirety.

TECHNICAL FIELD

[0002] This present invention relates to all semiconductor devices and systems. Particularly it applies to diffused diodes, avalanche diodes, Schottky devices, power MOS transistors, JFET's, RF bipolar transistors, IGBTs (Insulated Gate Bipolar Transistors), varactors, digital VLSI, mixed signal circuits and sensor devices including camera ICs employing CCD (Charge Coupled Device) as well as CMOS technologies.

Greenthread Ex. 2069, p. 174 of 199
Semiconductor v. Greenthread
IPR2023-01242

BACKGROUND

[0003] Bipolar Junction Transistors (BJT) are classified as minority carrier devices because minority carriers are the principle device conduction mechanism. However, majority carriers also play a small but finite role in modulating the conductivity in BJTs. Consequently, both carriers (electrons and holes) play a role in the switching performance of BJTs. The maximum frequency of operation in BJTs is limited by the base transit time as well as the quick recombination of the majority carriers when the device is switched off (prior to beginning the next cycle). The dominant carrier mechanism in BJTs is carrier diffusion. The carrier drift current component is fairly small, especially in uniformly doped base BJTs. Efforts have been made in graded base transistors to create an aiding drift field to enhance the diffusing minority carrier's speed from emitter to collector. However, most semiconductor devices, including various power MOSFETs (traditional, DMOS, lateral, vertical and a host of other configurations), IGBT's (Insulated Gated Base Transistors), still use a uniformly doped 'drift epitaxial' region in the base. FIG. 1 shows the relative doping concentration versus distance in a BJT. FIG. 2 shows the uniformly doped epi region in an IGBT. In contrast to BJTs, MOS devices are majority carrier devices for conduction. The conduction is channel dominated. The channel can be a surface in one plane in planar devices. The surface can also be on the sidewalls in a vertical device. Other device architectures to combine planar and vertical conductions are also possible. The maximum frequency of operation is dictated primarily by source-drain separation distance. Most MOS devices use a uniformly doped substrate (or a well region). When a MOSFET is optimally integrated with a BJT in a monolithic fashion, an IGBT results. The IGBT inherits the advantages of both MOSFET and BJT. It also brings new challenges because the required characteristics (electron transit and hole recombination as fast as possible in n-channel IGBT) necessitate different dopant gradients either in the same layer at different positions, or at the interfaces of similar or dissimilar layers.

[0004] Retrograde wells have been attempted, with little success, to help improve soft error immunity in SRAMs and visual quality in imaging circuits. FIG. 3A shows a typical CMOS VLSI device employing a twin well substrate, on which active devices are subsequently fabricated. FIGS. 3B, 3C, and 3D illustrate device cross sections, as practiced today. Retrograde and halo wells have also been attempted to improve refresh time in DRAMs (dynamic random-

Greenthread Ex. 2069, p. 175 of 199
Semiconductor v. Greenthread
IPR2023-01242

access memories), as well as, reducing dark current (background noise) and enhance RGB (Red, Green, Blue) color resolution in digital camera ICs. Most of these techniques either divert the minority carriers away from the active regions of critical charge storage nodes at the surface, or, increase minority carrier density locally as the particular application requires.

Greenthread Ex. 2069, p. 176 of 199
Semiconductor v. Greenthread
IPR2023-01242

BRIEF DESCRIPTION OF THE DRAWINGS

[0005] For a more complete understanding of the present invention, and the advantages thereof, reference is now made to the following descriptions taken in conjunction with the accompanying drawings, in which:

[0006] FIG. 1 illustrates the relative doping profiles of emitter, base and collector for the two most popular bipolar junction transistors: namely, uniform base ("A") and graded base ("B");

[0007] FIG. 2 illustrates the cross section of a commercial IGBT with a uniform epitaxial drift region (base);

[0008] FIGS. 3A, 3B, 3C, and 3D illustrate cross sections of commonly used prior art CMOS silicon substrates; FIG. 3A showing a typical prior art IC with two wells (one n^-well in which p-channel transistors are subsequently fabricated and one p^-well in which n-channel transistors are subsequently fabricated); FIG 3B showing a prior art EEPROM (Electronically Erasable Programmable Read-Only Memory) memory cell having a tunnel insulator; FIG. 3C showing a prior art DRAM memory cell; and FIG. 3D showing a prior art NAND flash memory cell;

[0009] FIG. 4 illustrates the cross section of an IGBT, using one embodiment of the invention described here, where the dopant is optimally graded in the epitaxial drift region; and

[0010] FIGS. 5A, 5B, and 5C illustrate the cross sections of a CMOS silicon substrate with two wells and an underlying layer using embodiments of the invention to improve performance in each application—VLSI logic, DRAM/image IC, nonvolatile memory IC.

Greenthread Ex. 2069, p. 177 of 199
Semiconductor v. Greenthread
IPR2023-01242

DETAILED DESCRIPTION

[0011] The relative doping concentrations of emitter and collector regions varies from 10^{18} to $10^{20}/cm^3$, whereas the base region is 10^{14} to $10^{16}/cm^3$ depending on the desired characteristics of the BJT. In graded base p-n-p transistors, the donor dopant concentration may be 10 to 100× at the emitter-base junction, relative to the base-collector junction (1×). The gradient can be linear, quasi linear, exponential or complimentary error function. The relative slope of the donor concentration throughout the base creates a suitable aiding drift electric field, to help the holes (p-n-p transistor) transverse from emitter to collector. Since the aiding drift electric field helps hole conduction, the current gain at a given frequency is enhanced, relative to a uniformly-doped (base) BJT. The improvement in cut-off frequency (or, frequency at unity gain, f_T) can be as large as 2×-5×. Similar performance improvements are also applicable to n-p-n transistors.

[0012] As illustrated in FIG. 4, in one embodiment according to the invention, a donor gradient is established from the emitter-drift epitaxial base region junction of the punch-through IGBT, to the drift epitaxial base region—n^+ buffer layer boundary (electrons in this case are accelerated in their transit from emitter to collector). The "average" base resistance is optimized so that conductivity modulation and lifetime (for minority carriers) in the base region are not compromised. By sweeping the carriers towards the n^+ buffer region a number of advantages are obtained. First, the frequency of operation (combination of t_{on} and t_{off} as is known in the IGBT commercial nomenclature) can be enhanced. Second, and maybe more importantly, during t_{off}, holes can be recombined much quicker at the n^+ buffer layer, compared to the uniformly doped n^-epitaxial drift region by establishing a different dopant gradient near the n^+ buffer layer. It should be noted that the drift region can also be a non-epitaxial silicon substrate. Although epitaxy enhances lifetime, it is not mandatory. Different layers of dopant regions can be transferred through wafer to wafer bonding (or other similar transfer mechanisms) for eventual device fabrication. The "reverse recovery time" for an IGBT is significantly improved due to the optimized graded dopant in the so called "drift region" as well as at the interfaces of the drift region. Graded dopants can also be implemented in the n^+ buffer layer as well as other regions adjacent to the respective layers. Two important performance enhancements are the result of dopant gradients. For example, in an n-channel IGBT, electrons can be swept from source to

Greenthread Ex. 2069, p. 178 of 199
Semiconductor v. Greenthread
IPR2023-01242

drain rapidly, while at the same time holes can be recombined closer to the n^+ buffer layer. This can improve t_{on} and t_{off} in the same device.

[0013] As illustrated in FIGS. 5A, 5B, and 5C, donor gradient is also of benefit to very large scale integrated circuits (VLSI)—VLSI logic, DRAM, nonvolatile memory like NAND flash. Spurious minority carriers can be generated by clock switching in digital VLSI logic and memory ICs. These unwanted carriers can discharge dynamically-held "actively held high" nodes. In most cases, statically-held nodes (with V_{cc}) cannot be affected. Degradation of refresh time in DRAMs is one of the results, because the capacitor holds charge dynamically. Similarly, degradation of CMOS digital images in digital imaging ICs is another result of the havoc caused by minority carriers. Pixel and color resolution can be significantly enhanced in imaging ICs with the embodiments described herein. Creating "subterranean" recombination centers underneath the wells (gold doping, platinum doping) as is done in some high-voltage diodes is not practical for VLSI circuits. Hence, a novel technique is described herein which creates a drift field to sweep these unwanted minority carriers from the active circuitry at the surface into the substrate in a monolithic die as quickly as possible. In a preferred embodiment, the subterranean n^-layer has a graded donor concentration to sweep the minority carriers deep into the substrate. One or more of such layers can also be implemented through wafer to wafer bonding or similar "transfer" mechanisms. This n^-layer can be a deeply-implanted layer. It can also be an epitaxial layer. As desired, the n^-well and p^-wells can also be graded or retrograded in dopants to sweep those carriers away from the surface as well. The graded dopant can also be implemented in surface channel MOS devices to accelerate majority carriers towards the drain. To decrease programming time in nonvolatile memory devices, carriers should be accelerated towards the surface when programming of memory cells is executed. The graded dopant can also be used to fabricate superior Junction Field-Effect transistors where the "channel pinch-off" is controlled by a graded channel instead of a uniformly doped channel (as practiced in the prior art).

[0014] One of ordinary skill and familiarity in the art will recognize that the concepts taught herein can be customized and tailored to a particular application in many advantageous ways. For instance, minority carriers can be channeled to the surface to aid programming in nonvolatile memory devices (NOR, NAND, multivalued-cell). Moreover, single-well, and triple-well CMOS

Greenthread Ex. 2069, p. 179 of 199
Semiconductor v. Greenthread
IPR2023-01242

fabrication techniques can also be optimized to incorporate these embodiments individually and collectively. Any modifications of such embodiments (described here) fall within the spirit and scope of the invention. Hence, they fall within the scope of the claims described below.

[0015] Although the invention has been described with reference to specific embodiments, these descriptions are not meant to be construed in a limiting sense. Various modifications of the disclosed embodiments, as well as alternative embodiments of the invention will become apparent to persons skilled in the art upon reference to the description of the invention. It should be appreciated by those skilled in the art that the conception and the specific embodiment disclosed may be readily utilized as a basis for modifying or designing other structures for carrying out the same purposes of the present invention. It should also be realized by those skilled in the art that such equivalent constructions do not depart from the spirit and scope of the invention as set forth in the appended claims.

[0016] It is therefore, contemplated that the claims will cover any such modifications or embodiments that fall within the true scope of the invention.

Greenthread Ex. 2069, p. 180 of 199
Semiconductor v. Greenthread
IPR2023-01242

WHAT IS CLAIMED IS:

1. A semiconductor device, comprising:

a substrate of a first doping type at a first doping level having first and second surfaces;

a first active region disposed adjacent the first surface of the substrate with a second doping type opposite in conductivity to the first doping type;

a second active region separate from the first active region disposed adjacent to the first active region;

circuitry formed in at least one of the first active region or second active region; and

at least a portion of at least one of the first and second active regions having at least one graded dopant concentration to aid carrier movement from the first surface to the second surface of the substrate.

2. The semiconductor device of Claim 1, wherein the substrate is a p-type substrate.

3. The semiconductor device of Claim 1, wherein the substrate is an n-type substrate.

4. The semiconductor device of Claim 1, wherein the substrate has epitaxial silicon on top of a nonepitaxial substrate.

5. The semiconductor device of Claim 1, wherein the first active region and second active region contain p-channel and n-channel devices.

6. The semiconductor device of Claim 1, wherein the first active region and second active region contain either p-channel or n-channel devices.

7. The semiconductor device of Claim 1, wherein the first active region and second active region are each separated by at least one isolation region.

8. The semiconductor device of Claim 1, wherein the graded dopant is fabricated with an ion implantation process.

9. A semiconductor device, comprising:

a substrate of a first doping type at a first doping level having first and second surfaces;

a first active region disposed adjacent the first surface of the substrate with a second doping type opposite in conductivity to the first doping type;

a second active region separate from the first active region disposed adjacent to the first active region;

circuitry formed in at least one of the first active region or second active region; and

at least a portion of at least one of the first and second active regions having at least one graded dopant concentration to aid carrier movement from the surface to the substrate.

10. The semiconductor device of Claim 9, wherein the substrate is a p-type substrate.

11. The semiconductor device of Claim 9, wherein the substrate is an n-type substrate.

12. The semiconductor device of Claim 9, wherein the substrate has epitaxial silicon on top of a nonepitaxial substrate.

13. The semiconductor device of Claim 9, wherein the first active region and second active region contain p-channel and n-channel devices.

14. The semiconductor device of Claim 9, wherein the first active region and second active region contain either p-channel or n-channel devices.

15. The semiconductor device of Claim 9, wherein the first active region and second active region are each separated by at least one isolation region.

16. The semiconductor device of Claim 9, wherein the graded dopant is fabricated with an ion implantation process.

ABSTRACT

Most semiconductor devices manufactured today, have uniform dopant concentration, either in the lateral or vertical device active (and isolation) regions. By grading the dopant concentration, the performance in various semiconductor devices can be significantly improved. Performance improvements can be obtained in application specific areas like increase in frequency of operation for digital logic, various power MOSFET and IGBT ICs, improvement in refresh time for DRAMs, decrease in programming time for nonvolatile memory, better visual quality including pixel resolution and color sensitivity for imaging ICs, better sensitivity for varactors in tunable filters, higher drive capabilities for JFETs, and a host of other applications.

Greenthread Ex. 2069, p. 184 of 199
Semiconductor v. Greenthread
IPR2023-01242

Electronic Patent Application Fee Transmittal

Application Number:	
Filing Date:	
Title of Invention:	SEMICONDUCTOR DEVICES WITH GRADED DOPANT REGIONS
First Named Inventor/Applicant Name:	MOHAN G.R. RAO
Filer:	Keith D. Harden
Attorney Docket Number:	GRTD-33439

Filed as Small Entity

Filing Fees for Utility under 35 USC 111(a)

Description	Fee Code	Quantity	Amount	Sub-Total in USD($)
Basic Filing:				
UTILITY FILING FEE (ELECTRONIC FILING)	4011	1	70	70
UTILITY SEARCH FEE	2111	1	300	300
UTILITY EXAMINATION FEE	2311	1	360	360
Pages:				
Claims:				
Miscellaneous-Filing:				
Petition:				
Patent-Appeals-and-Interference:				

Description	Fee Code	Quantity	Amount	Sub-Total in USD($)
Post-Allowance-and-Post-Issuance:				
Extension-of-Time:				
Miscellaneous:				
			Total in USD ($)	**730**

Electronic Acknowledgement Receipt

EFS ID:	29154346
Application Number:	15590282
International Application Number:	
Confirmation Number:	1032
Title of Invention:	SEMICONDUCTOR DEVICES WITH GRADED DOPANT REGIONS
First Named Inventor/Applicant Name:	MOHAN G.R. RAO
Customer Number:	25883
Filer:	Keith D. Harden
Filer Authorized By:	
Attorney Docket Number:	GRTD-33439
Receipt Date:	09-MAY-2017
Filing Date:	
Time Stamp:	13:22:11
Application Type:	Utility under 35 USC 111(a)

Payment information:

Submitted with Payment	yes
Payment Type	DA
Payment was successfully received in RAM	$730
RAM confirmation Number	050917INTEFSW00012143200780
Deposit Account	200780
Authorized User	Keith Harden

The Director of the USPTO is hereby authorized to charge indicated fees and credit any overpayment as follows:

37 CFR 1.16 (National application filing, search, and examination fees)

37 CFR 1.17 (Patent application and reexamination processing fees)

37 CFR 1.21 (Miscellaneous fees and charges)

File Listing:

Document Number	Document Description	File Name	File Size(Bytes)/ Message Digest	Multi Part /.zip	Pages (if appl.)
1	Application Data Sheet	GRT33439ADS.pdf	1823021 f799775d761de8e19214e99fc04a5dbb5b4a294b	no	9
Warnings:					
Information:					
2	Oath or Declaration filed	GRT32806DECEXE.pdf	64623 b940b3703a26f0050647878a0a41d917f9039005	no	1
Warnings:					
The page size in the PDF is too large. The pages should be 8.5 x 11 or A4. If this PDF is submitted, the pages will be resized upon entry into the Image File Wrapper and may affect subsequent processing					
Information:					
3	Power of Attorney	GRT33439POAEXE.pdf	1282328 0bf0c85a217a586f312000061eb7bb82554a9930	no	2
Warnings:					
Information:					
4	Drawings-only black and white line drawings	GRT33439FRMLDWGS.pdf	3505555 11a6f1762d3af8e1d857f1543cf8802749f917a9	no	10
Warnings:					
Information:					
5		GRT33439CONAPP.pdf	130625 1644af2c8a0af0e531bbe24155888dcc1b920ee5	yes	12

Multipart Description/PDF files in .zip description

Document Description	Start	End
Specification	1	8
Claims	9	11

	Abstract		12	12	
Warnings:					
Information:					
6	Fee Worksheet (SB06)	fee-info.pdf	34657 7226cb56b968b0052254cd0ed05051f8471bd06e	no	2
Warnings:					
Information:					
		Total Files Size (in bytes):	6840809		

This Acknowledgement Receipt evidences receipt on the noted date by the USPTO of the indicated documents, characterized by the applicant, and including page counts, where applicable. It serves as evidence of receipt similar to a Post Card, as described in MPEP 503.

<u>New Applications Under 35 U.S.C. 111</u>
If a new application is being filed and the application includes the necessary components for a filing date (see 37 CFR 1.53(b)-(d) and MPEP 506), a Filing Receipt (37 CFR 1.54) will be issued in due course and the date shown on this Acknowledgement Receipt will establish the filing date of the application.
<u>National Stage of an International Application under 35 U.S.C. 371</u>
If a timely submission to enter the national stage of an international application is compliant with the conditions of 35 U.S.C. 371 and other applicable requirements a Form PCT/DO/EO/903 indicating acceptance of the application as a national stage submission under 35 U.S.C. 371 will be issued in addition to the Filing Receipt, in due course.
<u>New International Application Filed with the USPTO as a Receiving Office</u>
If a new international application is being filed and the international application includes the necessary components for an international filing date (see PCT Article 11 and MPEP 1810), a Notification of the International Application Number and of the International Filing Date (Form PCT/RO/105) will be issued in due course, subject to prescriptions concerning national security, and the date shown on this Acknowledgement Receipt will establish the international filing date of the application.

Under the Paperwork Reduction Act of 1995, no persons are required to respond to a collection of information unless it contains a valid OMB control number.

Application Data Sheet 37 CFR 1.76	Attorney Docket Number	GRTD-33439
	Application Number	
Title of Invention	SEMICONDUCTOR DEVICES WITH GRADED DOPANT REGIONS	

The application data sheet is part of the provisional or nonprovisional application for which it is being submitted. The following form contains the bibliographic data arranged in a format specified by the United States Patent and Trademark Office as outlined in 37 CFR 1.76.
This document may be completed electronically and submitted to the Office in electronic format using the Electronic Filing System (EFS) or the document may be printed and included in a paper filed application.

Secrecy Order 37 CFR 5.2:

☐ Portions or all of the application associated with this Application Data Sheet may fall under a Secrecy Order pursuant to 37 CFR 5.2 (Paper filers only. Applications that fall under Secrecy Order may not be filed electronically.)

Inventor Information:

Inventor 1 Remove

Legal Name

Prefix	Given Name	Middle Name	Family Name	Suffix
	G.R. MOHAN		RAO	

Residence Information (Select One) ● US Residency Non US Residency Active US Military Service

City	ALLEN	State/Province	TX	Country of Residence i	US

Mailing Address of Inventor:

Address 1	1611 WILLINGHAM DRIVE		
Address 2			
City	ALLEN	State/Province	TX
Postal Code	75013	Country i	US

All Inventors Must Be Listed - Additional Inventor Information blocks may be generated within this form by selecting the **Add** button. Add

Correspondence Information:

Enter either Customer Number or complete the Correspondence Information section below.
For further information see 37 CFR 1.33(a).

☐ **An Address is being provided for the correspondence Information of this application.**

Customer Number	25883		
Email Address	ADMIN@DALPAT.COM	Add Email	Remove Email

Application Information:

Title of the Invention	SEMICONDUCTOR DEVICES WITH GRADED DOPANT REGIONS		
Attorney Docket Number	GRTD-33439	Small Entity Status Claimed	☒
Application Type	Nonprovisional		
Subject Matter	Utility		
Total Number of Drawing Sheets (if any)		Suggested Figure for Publication (if any)	

Under the Paperwork Reduction Act of 1995, no persons are required to respond to a collection of information unless it contains a valid OMB control number.

Application Data Sheet 37 CFR 1.76	Attorney Docket Number	GRTD-33439
	Application Number	
Title of Invention	SEMICONDUCTOR DEVICES WITH GRADED DOPANT REGIONS	

Filing By Reference:

Only complete this section when filing an application by reference under 35 U.S.C. 111(c) and 37 CFR 1.57(a). Do not complete this section if application papers including a specification and any drawings are being filed. Any domestic benefit or foreign priority information must be provided in the appropriate section(s) below (i.e., "Domestic Benefit/National Stage Information" and "Foreign Priority Information").

For the purposes of a filing date under 37 CFR 1.53(b), the description and any drawings of the present application are replaced by this reference to the previously filed application, subject to conditions and requirements of 37 CFR 1.57(a).

Application number of the previously filed application	Filing date (YYYY-MM-DD)	Intellectual Property Authority or Country

Publication Information:

☐ Request Early Publication (Fee required at time of Request 37 CFR 1.219)

☐ **Request Not to Publish.** I hereby request that the attached application not be published under 35 U.S.C. 122(b) and certify that the invention disclosed in the attached application **has not and will not** be the subject of an application filed in another country, or under a multilateral international agreement, that requires publication at eighteen months after filing.

Representative Information:

Representative information should be provided for all practitioners having a power of attorney in the application. Providing this information in the Application Data Sheet does not constitute a power of attorney in the application (see 37 CFR 1.32).
Either enter Customer Number or complete the Representative Name section below. If both sections are completed the customer Number will be used for the Representative Information during processing.

Please Select One:	● Customer Number	US Patent Practitioner	○ Limited Recognition (37 CFR 11.9)
Customer Number	25883		

Domestic Benefit/National Stage Information:

This section allows for the applicant to either claim benefit under 35 U.S.C. 119(e), 120, 121, 365(c), or 386(c) or indicate National Stage entry from a PCT application. Providing benefit claim information in the Application Data Sheet constitutes the specific reference required by 35 U.S.C. 119(e) or 120, and 37 CFR 1.78.
When referring to the current application, please leave the "Application Number" field blank.

Prior Application Status: Patented — Remove

Application Number	Continuity Type	Prior Application Number	Filing Date (YYYY-MM-DD)	Patent Number	Issue Date (YYYY-MM-DD)
	Continuation of	14/931636	2015-11-03	9647070	2017-05-09

Under the Paperwork Reduction Act of 1995, no persons are required to respond to a collection of information unless it contains a valid OMB control number.

Application Data Sheet 37 CFR 1.76	Attorney Docket Number	GRTD-33439
	Application Number	
Title of Invention	SEMICONDUCTOR DEVICES WITH GRADED DOPANT REGIONS	

Prior Application Status	Patented				Remove
Application Number	Continuity Type	Prior Application Number	Filing Date (YYYY-MM-DD)	Patent Number	Issue Date (YYYY-MM-DD)
14/931636	Continuation of	14/515584	2014-10-16	9190502	2015-11-17
Prior Application Status	Abandoned				Remove
Application Number	Continuity Type	Prior Application Number	Filing or 371(c) Date (YYYY-MM-DD)		
14/515584	Continuation of	13/854319	2013-04-01		
Prior Application Status	Patented				Remove
Application Number	Continuity Type	Prior Application Number	Filing Date (YYYY-MM-DD)	Patent Number	Issue Date (YYYY-MM-DD)
13/854319	Continuation of	11/622496	2007-01-12	8421195	2013-04-16
Prior Application Status	Abandoned				Remove
Application Number	Continuity Type	Prior Application Number	Filing or 371(c) Date (YYYY-MM-DD)		
11/622496	Division of	10/934915	2004-09-03		

Additional Domestic Benefit/National Stage Data may be generated within this form by selecting the **Add** button. Add

Foreign Priority Information:

This section allows for the applicant to claim priority to a foreign application. Providing this information in the application data sheet constitutes the claim for priority as required by 35 U.S.C. 119(b) and 37 CFR 1.55. When priority is claimed to a foreign application that is eligible for retrieval under the priority document exchange program (PDX)[i] the information will be used by the Office to automatically attempt retrieval pursuant to 37 CFR 1.55(i)(1) and (2). Under the PDX program, applicant bears the ultimate responsibility for ensuring that a copy of the foreign application is received by the Office from the participating foreign intellectual property office, or a certified copy of the foreign priority application is filed, within the time period specified in 37 CFR 1.55(g)(1).

Remove

Application Number	Country[i]	Filing Date (YYYY-MM-DD)	Access Code[i] (if applicable)

Additional Foreign Priority Data may be generated within this form by selecting the **Add** button. Add

Statement under 37 CFR 1.55 or 1.78 for AIA (First Inventor to File) Transition Applications

Under the Paperwork Reduction Act of 1995, no persons are required to respond to a collection of information unless it contains a valid OMB control number.

Application Data Sheet 37 CFR 1.76	Attorney Docket Number	GRTD-33439
	Application Number	
Title of Invention	SEMICONDUCTOR DEVICES WITH GRADED DOPANT REGIONS	

☐ This application (1) claims priority to or the benefit of an application filed before March 16, 2013 and (2) also contains, or contained at any time, a claim to a claimed invention that has an effective filing date on or after March 16, 2013.
NOTE: By providing this statement under 37 CFR 1.55 or 1.78, this application, with a filing date on or after March 16, 2013, will be examined under the first inventor to file provisions of the AIA.

Application Data Sheet 37 CFR 1.76	Attorney Docket Number	GRTD-33439
	Application Number	
Title of Invention	SEMICONDUCTOR DEVICES WITH GRADED DOPANT REGIONS	

Authorization or Opt-Out of Authorization to Permit Access:

When this Application Data Sheet is properly signed and filed with the application, applicant has provided written authority to permit a participating foreign intellectual property (IP) office access to the instant application-as-filed (see paragraph A in subsection 1 below) and the European Patent Office (EPO) access to any search results from the instant application (see paragraph B in subsection 1 below).

Should applicant choose not to provide an authorization identified in subsection 1 below, applicant **must opt-out** of the authorization by checking the corresponding box A or B or both in subsection 2 below.

NOTE: This section of the Application Data Sheet is **ONLY** reviewed and processed with the **INITIAL** filing of an application. After the initial filing of an application, an Application Data Sheet cannot be used to provide or rescind authorization for access by a foreign IP office(s). Instead, Form PTO/SB/39 or PTO/SB/69 must be used as appropriate.

1. Authorization to Permit Access by a Foreign Intellectual Property Office(s)

A. Priority Document Exchange (PDX) - Unless box A in subsection 2 (opt-out of authorization) is checked, the undersigned hereby **grants the USPTO authority** to provide the European Patent Office (EPO), the Japan Patent Office (JPO), the Korean Intellectual Property Office (KIPO), the State Intellectual Property Office of the People's Republic of China (SIPO), the World Intellectual Property Organization (WIPO), and any other foreign intellectual property office participating with the USPTO in a bilateral or multilateral priority document exchange agreement in which a foreign application claiming priority to the instant patent application is filed, access to: (1) the instant patent application-as-filed and its related bibliographic data, (2) any foreign or domestic application to which priority or benefit is claimed by the instant application and its related bibliographic data, and (3) the date of filing of this Authorization. See 37 CFR 1.14(h)(1).

B. Search Results from U.S. Application to EPO - Unless box B in subsection 2 (opt-out of authorization) is checked, the undersigned hereby **grants the USPTO authority** to provide the EPO access to the bibliographic data and search results from the instant patent application when a European patent application claiming priority to the instant patent application is filed. See 37 CFR 1.14(h)(2).

The applicant is reminded that the EPO's Rule 141(1) EPC (European Patent Convention) requires applicants to submit a copy of search results from the instant application without delay in a European patent application that claims priority to the instant application.

2. Opt-Out of Authorizations to Permit Access by a Foreign Intellectual Property Office(s)

☐ A. Applicant **DOES NOT** authorize the USPTO to permit a participating foreign IP office access to the instant application-as-filed. If this box is checked, the USPTO will not be providing a participating foreign IP office with any documents and information identified in subsection 1A above.

☐ B. Applicant **DOES NOT** authorize the USPTO to transmit to the EPO any search results from the instant patent application. If this box is checked, the USPTO will not be providing the EPO with search results from the instant application.

NOTE: Once the application has published or is otherwise publicly available, the USPTO may provide access to the application in accordance with 37 CFR 1.14.

Under the Paperwork Reduction Act of 1995, no persons are required to respond to a collection of information unless it contains a valid OMB control number.

Application Data Sheet 37 CFR 1.76	Attorney Docket Number	GRTD-33439
	Application Number	
Title of Invention	SEMICONDUCTOR DEVICES WITH GRADED DOPANT REGIONS	

Applicant Information:

Providing assignment information in this section does not substitute for compliance with any requirement of part 3 of Title 37 of CFR to have an assignment recorded by the Office.

Applicant 1 Remove

If the applicant is the inventor (or the remaining joint inventor or inventors under 37 CFR 1.45), this section should not be completed. The information to be provided in this section is the name and address of the legal representative who is the applicant under 37 CFR 1.43; or the name and address of the assignee, person to whom the inventor is under an obligation to assign the invention, or person who otherwise shows sufficient proprietary interest in the matter who is the applicant under 37 CFR 1.46. If the applicant is an applicant under 37 CFR 1.46 (assignee, person to whom the inventor is obligated to assign, or person who otherwise shows sufficient proprietary interest) together with one or more joint inventors, then the joint inventor or inventors who are also the applicant should be identified in this section.

Clear

● Assignee	Legal Representative under 35 U.S.C. 117	Joint Inventor
Person to whom the inventor is obligated to assign.	Person who shows sufficient proprietary interest	

If applicant is the legal representative, indicate the authority to file the patent application, the inventor is:

Name of the Deceased or Legally Incapacitated Inventor:

If the Applicant is an Organization check here. ☒

Organization Name	GREENTHREAD, LLC		
Mailing Address Information For Applicant:			
Address 1	4544 HARRYS LANE		
Address 2			
City	DALLAS	**State/Province**	TX
Country	US	Postal Code	75229-5400
Phone Number		Fax Number	
Email Address			

Additional Applicant Data may be generated within this form by selecting the Add button. Add

Assignee Information including Non-Applicant Assignee Information:

Providing assignment information in this section does not substitute for compliance with any requirement of part 3 of Title 37 of CFR to have an assignment recorded by the Office.

Under the Paperwork Reduction Act of 1995, no persons are required to respond to a collection of information unless it contains a valid OMB control number.

Application Data Sheet 37 CFR 1.76	Attorney Docket Number	GRTD-33439
	Application Number	
Title of Invention	SEMICONDUCTOR DEVICES WITH GRADED DOPANT REGIONS	

Assignee 1

Complete this section if assignee information, including non-applicant assignee information, is desired to be included on the patent application publication. An assignee-applicant identified in the "Applicant Information" section will appear on the patent application publication as an applicant. For an assignee-applicant, complete this section only if identification as an assignee is also desired on the patent application publication.

Remove

If the Assignee or Non-Applicant Assignee is an Organization check here. ☐

Prefix	**Given Name**	Middle Name	**Family Name**	Suffix

Mailing Address Information For Assignee including Non-Applicant Assignee:

Address 1			
Address 2			
City		**State/Province**	
Country i		Postal Code	
Phone Number		Fax Number	
Email Address			

Additional Assignee or Non-Applicant Assignee Data may be generated within this form by selecting the Add button. Add

Signature:

Remove

NOTE: This Application Data Sheet must be signed in accordance with 37 CFR 1.33(b). **However, if this Application Data Sheet is submitted with the INITIAL filing of the application and either box A or B is not checked in subsection 2 of the "Authorization or Opt-Out of Authorization to Permit Access" section, then this form must also be signed in accordance with 37 CFR 1.14(c).**

This Application Data Sheet **must** be signed by a patent practitioner if one or more of the applicants is a **juristic entity** (e.g., corporation or association). If the applicant is two or more joint inventors, this form must be signed by a patent practitioner, **all** joint inventors who are the applicant, or one or more joint inventor-applicants who have been given power of attorney (e.g., see USPTO Form PTO/AIA/81) on behalf of **all** joint inventor-applicants.

See 37 CFR 1.4(d) for the manner of making signatures and certifications.

Signature	/Keith D. Harden, Reg. #74472/			Date (YYYY-MM-DD)	2017-05-09
First Name	Keith	Last Name	Harden	Registration Number	74472

Additional Signature may be generated within this form by selecting the Add button. Add

Under the Paperwork Reduction Act of 1995, no persons are required to respond to a collection of information unless it contains a valid OMB control number.

Application Data Sheet 37 CFR 1.76	Attorney Docket Number	GRTD-33439
	Application Number	
Title of Invention	SEMICONDUCTOR DEVICES WITH GRADED DOPANT REGIONS	

This collection of information is required by 37 CFR 1.76. The information is required to obtain or retain a benefit by the public which is to file (and by the USPTO to process) an application. Confidentiality is governed by 35 U.S.C. 122 and 37 CFR 1.14. This collection is estimated to take 23 minutes to complete, including gathering, preparing, and submitting the completed application data sheet form to the USPTO. Time will vary depending upon the individual case. Any comments on the amount of time you require to complete this form and/or suggestions for reducing this burden, should be sent to the Chief Information Officer, U.S. Patent and Trademark Office, U.S. Department of Commerce, P.O. Box 1450, Alexandria, VA 22313-1450. DO NOT SEND FEES OR COMPLETED FORMS TO THIS ADDRESS. **SEND TO: Commissioner for Patents, P.O. Box 1450, Alexandria, VA 22313-1450.**

Privacy Act Statement

The Privacy Act of 1974 (P.L. 93-579) requires that you be given certain information in connection with your submission of the attached form related to a patent application or patent. Accordingly, pursuant to the requirements of the Act, please be advised that: (1) the general authority for the collection of this information is 35 U.S.C. 2(b)(2); (2) furnishing of the information solicited is voluntary; and (3) the principal purpose for which the information is used by the U.S. Patent and Trademark Office is to process and/or examine your submission related to a patent application or patent. If you do not furnish the requested information, the U.S. Patent and Trademark Office may not be able to process and/or examine your submission, which may result in termination of proceedings or abandonment of the application or expiration of the patent.

The information provided by you in this form will be subject to the following routine uses:

1 The information on this form will be treated confidentially to the extent allowed under the Freedom of Information Act (5 U.S.C. 552) and the Privacy Act (5 U.S.C. 552a). Records from this system of records may be disclosed to the Department of Justice to determine whether the Freedom of Information Act requires disclosure of these records.

2. A record from this system of records may be disclosed, as a routine use, in the course of presenting evidence to a court, magistrate, or administrative tribunal, including disclosures to opposing counsel in the course of settlement negotiations.

3 A record in this system of records may be disclosed, as a routine use, to a Member of Congress submitting a request involving an individual, to whom the record pertains, when the individual has requested assistance from the Member with respect to the subject matter of the record.

4. A record in this system of records may be disclosed, as a routine use, to a contractor of the Agency having need for the information in order to perform a contract. Recipients of information shall be required to comply with the requirements of the Privacy Act of 1974, as amended, pursuant to 5 U.S.C. 552a(m).

5. A record related to an International Application filed under the Patent Cooperation Treaty in this system of records may be disclosed, as a routine use, to the International Bureau of the World Intellectual Property Organization, pursuant to the Patent CooperationTreaty.

6. A record in this system of records may be disclosed, as a routine use, to another federal agency for purposes of National Security review (35 U.S.C. 181) and for review pursuant to the Atomic Energy Act (42 U.S.C. 218(c)).

7. A record from this system of records may be disclosed, as a routine use, to the Administrator, General Services, or his/her designee, during an inspection of records conducted by GSA as part of that agency's responsibility to recommend improvements in records management practices and programs, under authority of 44 U.S.C. 2904 and 2906. Such disclosure shall be made in accordance with the GSA regulations governing inspection of records for this purpose, and any other relevant (i.e., GSA or Commerce) directive. Such disclosure shall not be used to make determinations about individuals.

8. A record from this system of records may be disclosed, as a routine use, to the public after either publication of the application pursuant to 35 U.S.C. 122(b) or issuance of a patent pursuant to 35 U.S.C. 151. Further, a record may be disclosed, subject to the limitations of 37 CFR 1.14, as a routine use, to the public if the record was filed in an application which became abandoned or in which the proceedings were terminated and which application is referenced by either a published application, an application open to public inspections or an issued patent.

9. A record from this system of records may be disclosed, as a routine use, to a Federal, State, or local law enforcement agency, if the USPTO becomes aware of a violation or potential violation of law or regulation.

PTO/AIA/01 (06-12)
Approved for use through 01/31/2014. OMB 0651-0032
U.S. Patent and Trademark Office; U.S. DEPARTMENT OF COMMERCE
Under the Paperwork Reduction Act of 1995, no persons are required to respond to a collection of information unless it displays a valid OMB control number.

DECLARATION (37 CFR 1.63) FOR UTILITY OR DESIGN APPLICATION USING AN APPLICATION DATA SHEET (37 CFR 1.76)

Title of Invention	SEMICONDUCTOR DEVICES WITH GRADED DOPANT REGIONS

As the below named inventor, I hereby declare that:

This declaration is directed to: ☑ The attached application, or

☐ United States application or PCT International application number _____

filed on _____.

The above-identified application was made or authorized to be made by me.

I believe that I am the original inventor or an original joint inventor of a claimed invention in the application.

I hereby acknowledge that any willful false statement made in this declaration is punishable under 18 U.S.C. 1001 by fine or imprisonment of not more than five (5) years, or both.

WARNING:

Petitioner/applicant is cautioned to avoid submitting personal information in documents filed in a patent application that may contribute to identity theft. Personal information such as social security numbers, bank account numbers, or credit card numbers (other than a check or credit card authorization form PTO-2038 submitted for payment purposes) is never required by the USPTO to support a petition or an application. If this type of personal information is included in documents submitted to the USPTO, petitioners/applicants should consider redacting such personal information from the documents before submitting them to the USPTO. Petitioner/applicant is advised that the record of a patent application is available to the public after publication of the application (unless a non-publication request in compliance with 37 CFR 1.213(a) is made in the application) or issuance of a patent. Furthermore, the record from an abandoned application may also be available to the public if the application is referenced in a published application or an issued patent (see 37 CFR 1.14). Checks and credit card authorization forms PTO-2038 submitted for payment purposes are not retained in the application file and therefore are not publicly available.

LEGAL NAME OF INVENTOR

Inventor: G.R. Mohan Rao Date (Optional): Sept 30, 2015

Signature: G R Mohan Rao

Note: An application data sheet (PTO/AIA/14 or equivalent), including naming the entire inventive entity, must accompany this form. Use an additional PTO/SB/AIA01 form for each additional inventor.

This collection of information is required by 35 U.S.C. 115 and 37 CFR 1.63. The information is required to obtain or retain a benefit by the public which is to file (and by the USPTO to process) an application. Confidentiality is governed by 35 U.S.C. 122 and 37 CFR 1.11 and 1.14. This collection is estimated to take 1 minute to complete, including gathering, preparing, and submitting the completed application form to the USPTO. Time will vary depending upon the individual case. Any comments on the amount of time you require to complete this form and/or suggestions for reducing this burden, should be sent to the Chief Information Officer, U.S. Patent and Trademark Office, U.S. Department of Commerce, P.O. Box 1450, Alexandria, VA 22313-1450. DO NOT SEND FEES OR COMPLETED FORMS TO THIS ADDRESS. SEND TO: Commissioner for Patents, P.O. Box 1450, Alexandria, VA 22313-1450.

If you need assistance in completing the form, call 1-800-PTO-9199 and select option 2.