US005384476A

United States Patent [19]

Nishizawa et al.

[11] Patent Number: 5,384,476

[45] Date of Patent: Jan. 24, 1995

[54] SHORT CHANNEL MOSFET WITH BURIED ANTI-PUNCH THROUGH REGION

[75] Inventors: Jun-ichi Nishizawa; Tadahiro Ohmi, both of Sendai, Japan

[73] Assignee: Zaidan Hojin Handotai Kenkyu Shinkokai, Sendai, Japan

[21] Appl. No.: 62,333

[22] Filed: Jun. 9, 1987

Related U.S. Application Data

[63] Continuation of Ser. No. 179,782, Aug. 20, 1980, abandoned.

[30] **Foreign Application Priority Data**

Aug. 25, 1979 [JP] Japan 54-108377
Sep. 7, 1979 [JP] Japan 54-115491

[51] Int. Cl.[6] H01L 27/108

[52] U.S. Cl. 257/345; 257/297; 257/407

[58] Field of Search 257/407, 297, 345

[56] **References Cited**

U.S. PATENT DOCUMENTS

3,673,471	6/1972	Klein et al.	357/59
4,247,862	1/1981	Klein et al.	357/23 C
4,329,706	5/1982	Crowder et al.	357/23 S
4,334,235	6/1982	Nishizawa	357/41

FOREIGN PATENT DOCUMENTS

53-80172	7/1978	Japan	357/23 R
53-84571	7/1978	Japan	357/23 R
53-141585	12/1978	Japan	357/23 D

OTHER PUBLICATIONS

Konaka et al, "Suppression of Anomalous Drain Current . . . ", Japan. J. Appl. Physics, Suppl. 18-1, 1979, pp. 27-33.

Nishiuchi et al, IEEE International Electron Dev. Meeting, Dec. 1978, Technical Digest pp. 26-29.

Dennard, et al, IEEE J. of Solid State Circuits, vol. SC 9 No. 5, Oct. 1974, pp. 256-267.

Tasch, Jr., et al, IEEE Trans. on Electron Dev. vol. ED 25 No. 1, Jan. 1978, pp. 33-41 (not including p. 39).

Primary Examiner—William D. Larkins

Attorney, Agent, or Firm—Cushman, Darby & Cushman

[57] **ABSTRACT**

A semiconductor device having a source region, a drain region and a channel region which are formed in a surface portion of a semiconductor substrate, and a gate formed with a material having a relatively high built-in voltage relative to the source region. This semiconductor device may further include, in the semiconductor substrate to extend along the channel region, a highly-doped region having a conductivity type opposite to that of the source region. This highly-closed region may have an impurity concentration gradient which is greater toward its portion facing the abovesaid surface of the substrate. These arrangements serve to prevent extinction of memory due to current leakage during absence of bias voltage which otherwise would develop in semiconductor devices having short-channel and thin gate oxide layer, and due to irradiation of alpha-particle onto the device.

19 Claims, 18 Drawing Sheets

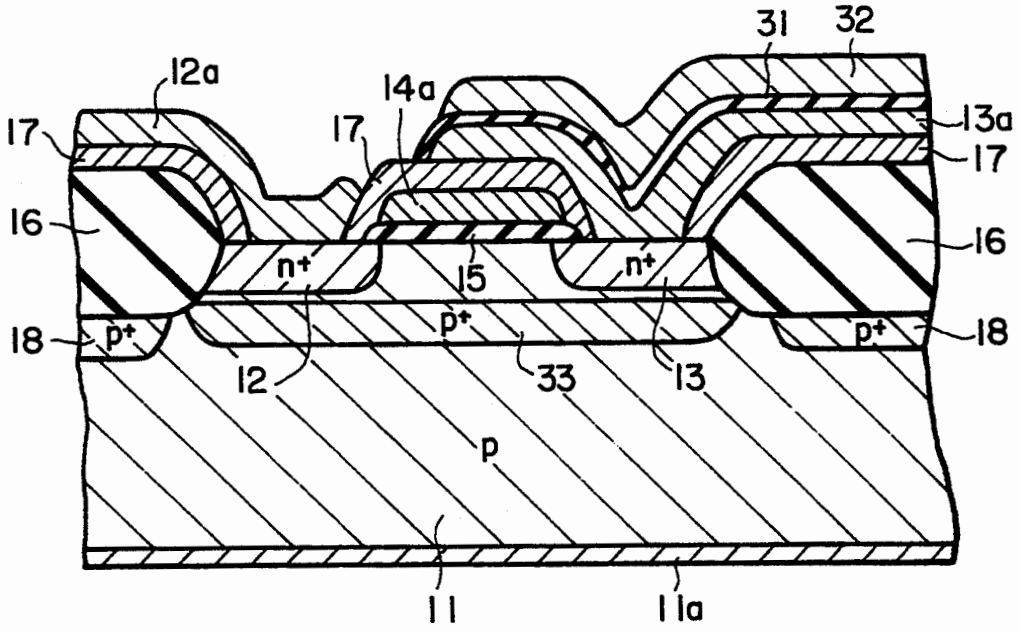

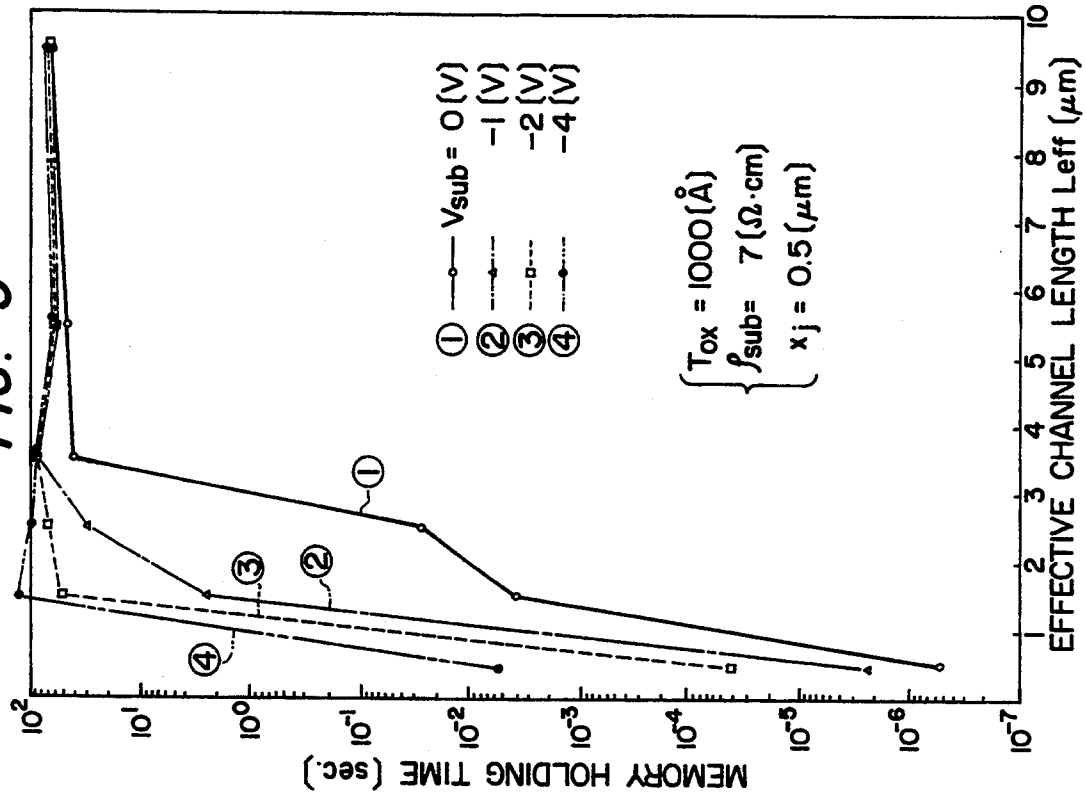
FIG. 3
MEMORY HOLDING TIME (sec.)
EFFECTIVE CHANNEL LENGTH Leff (μm)
① Vsub = 0 (V)
② -1 (V)
③ -2 (V)
④ -4 (V)
Tox = 1000 (Å)
ρsub = 7 (Ω·cm)
xj = 0.5 (μm)

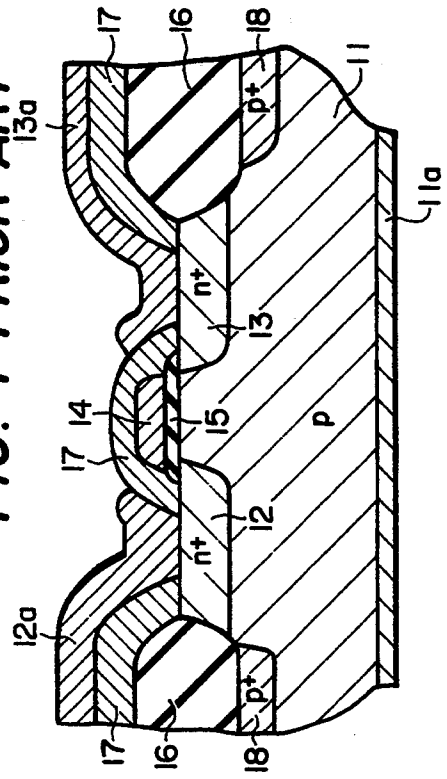
FIG. 1 PRIOR ART
13a
17
16
18
p+
11
11a
n+
13
14
15
p
12
12a

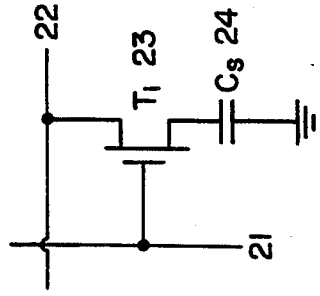
FIG. 2
22
T1 23
Cs 24
21

FIG. 5

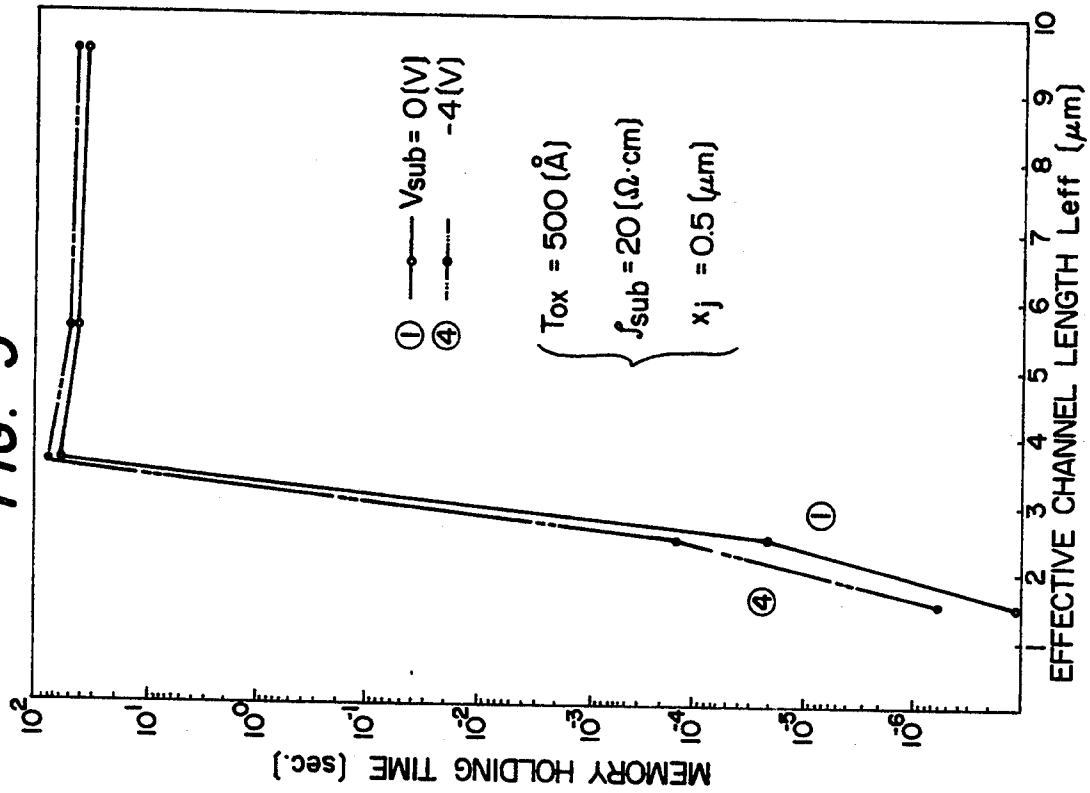
MEMORY HOLDING TIME (sec.)
EFFECTIVE CHANNEL LENGTH Leff (μm)
① Vsub = 0 (V)
④ -4 (V)
Tox = 500 (Å)
ρsub = 20 (Ω·cm)
xj = 0.5 (μm)

FIG. 4

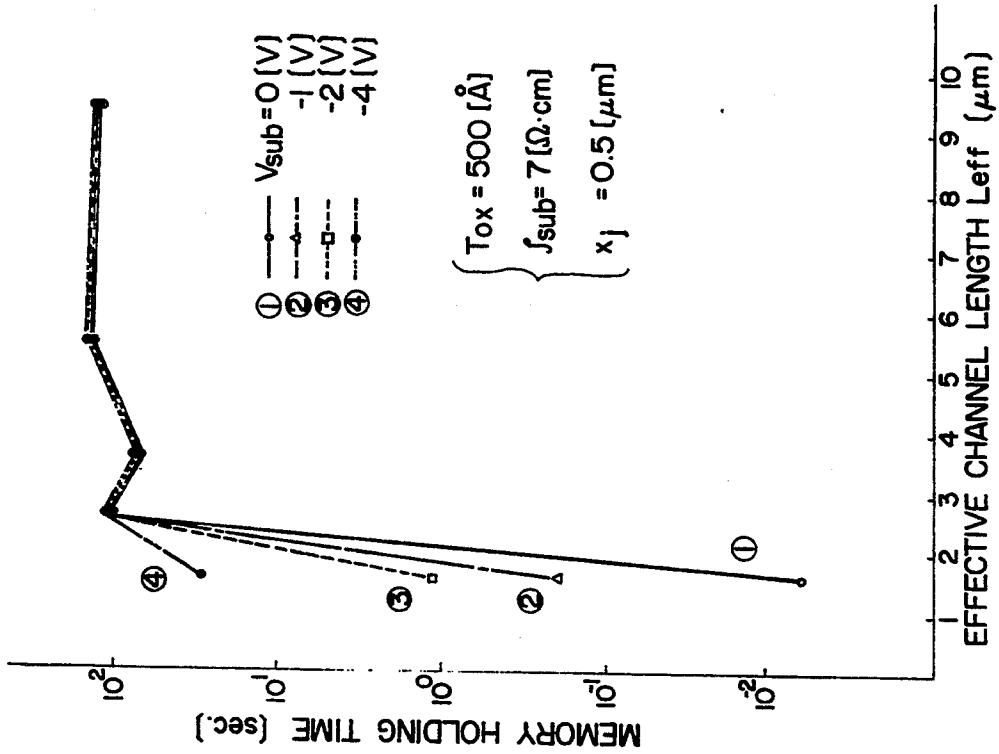
MEMORY HOLDING TIME (sec.)
EFFECTIVE CHANNEL LENGTH Leff (μm)
① Vsub = 0 (V)
② -1 (V)
③ -2 (V)
④ -4 (V)
Tox = 500 (Å)
ρsub = 7 (Ω·cm)
xj = 0.5 (μm)

FIG. 6

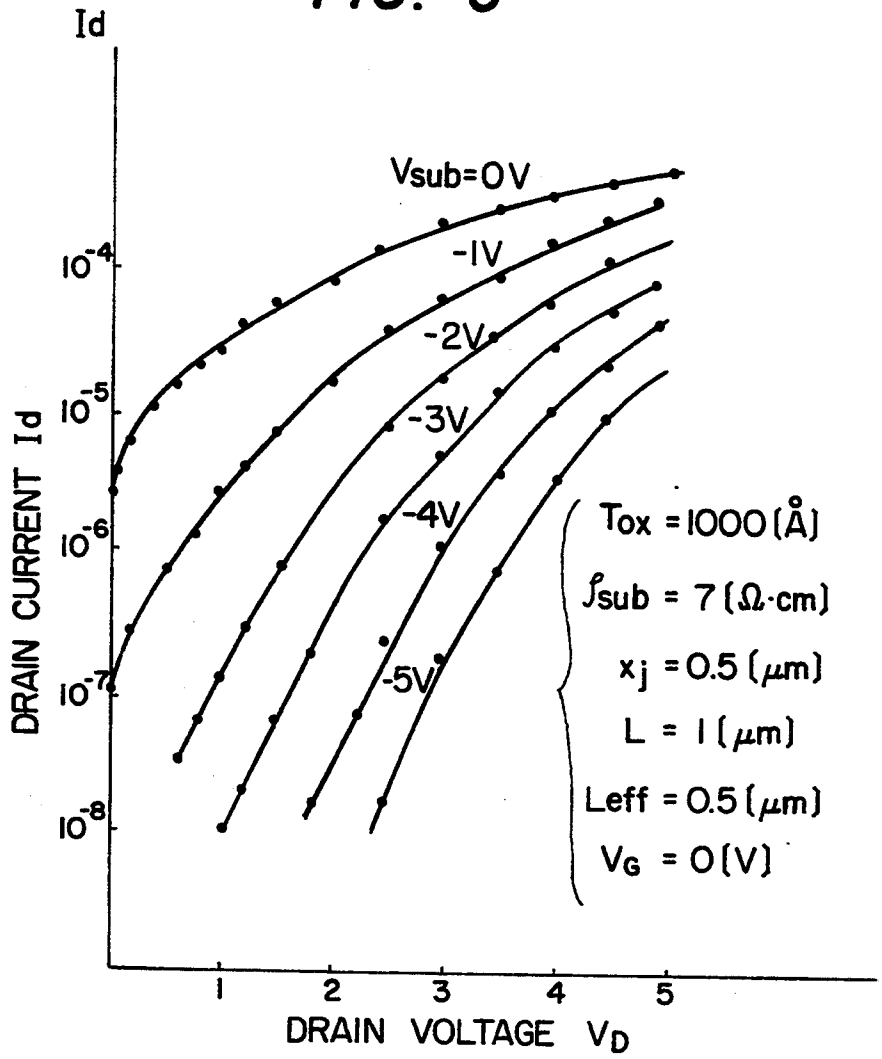
Id
Vsub=0V
-1V
-2V
-3V
-4V
-5V
10^{-4}
10^{-5}
10^{-6}
10^{-7}
10^{-8}
DRAIN CURRENT Id
Tox = 1000 (Å)
ρsub = 7 (Ω·cm)
xj = 0.5 (μm)
L = 1 (μm)
Leff = 0.5 (μm)
VG = 0 (V)
1
2
3
4
5
DRAIN VOLTAGE VD

FIG. 7

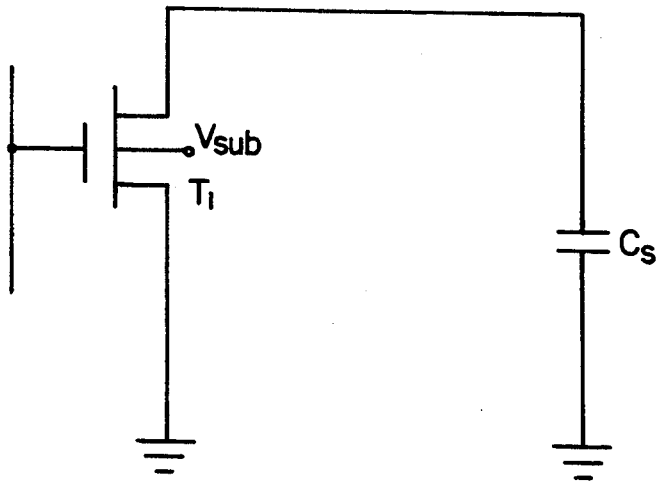
Vsub
T1
Cs

FIG. 8

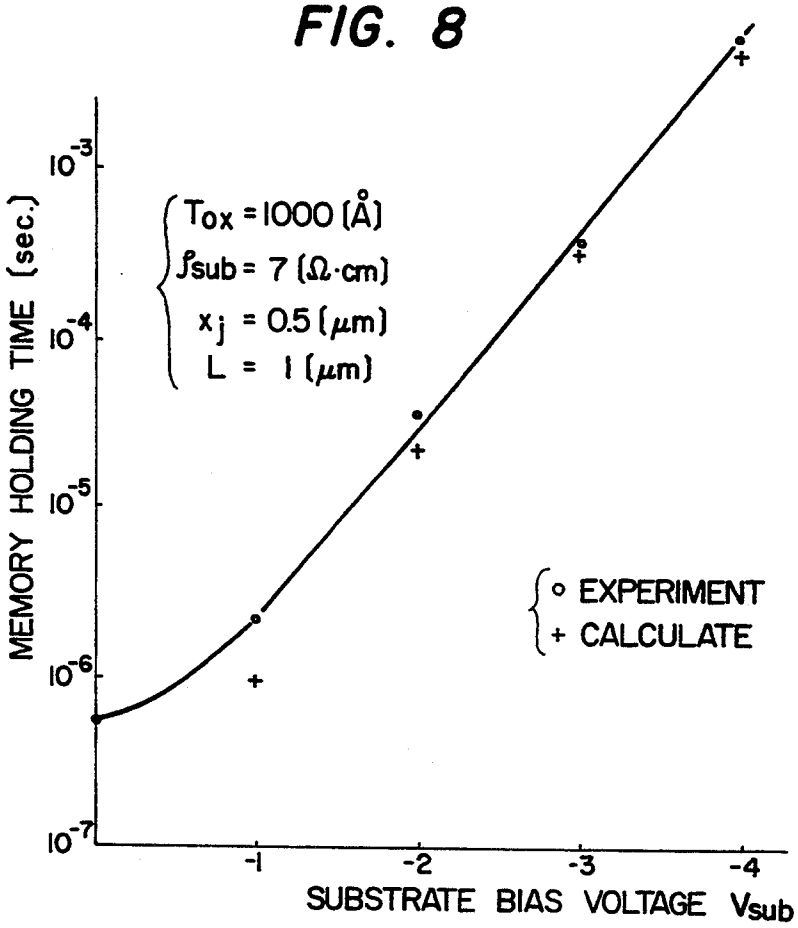

FIG. 9

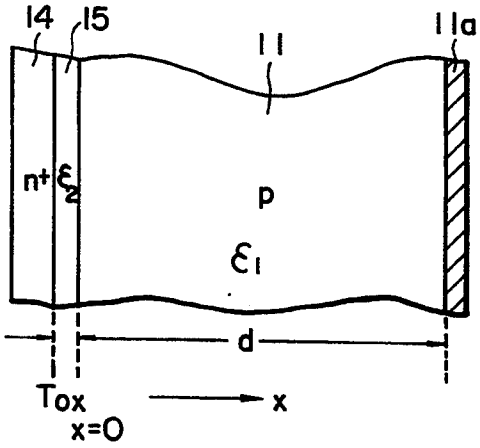

FIG. 10

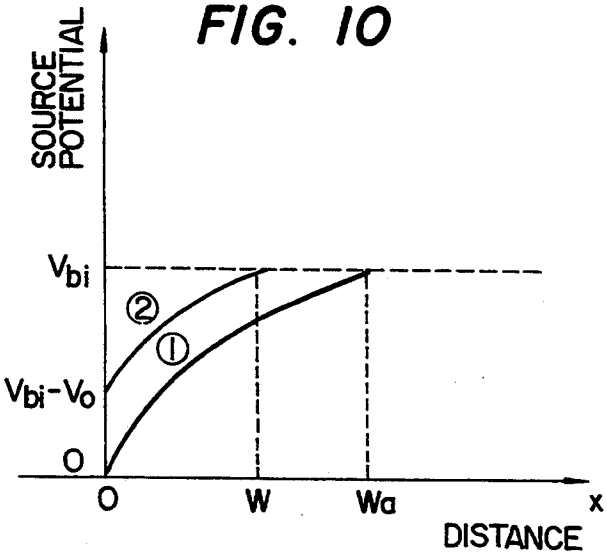

FIG. 11

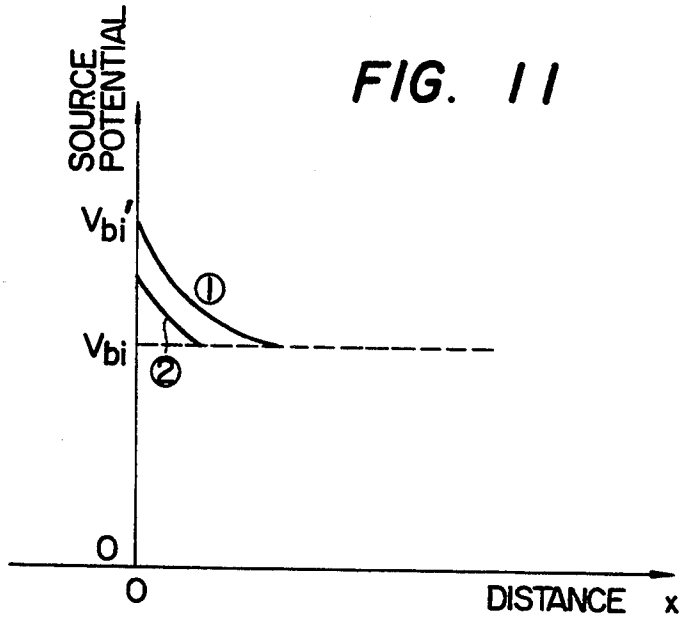
SOURCE POTENTIAL
Vbi'
Vbi
0
①
②
0
DISTANCE x

FIG. 12

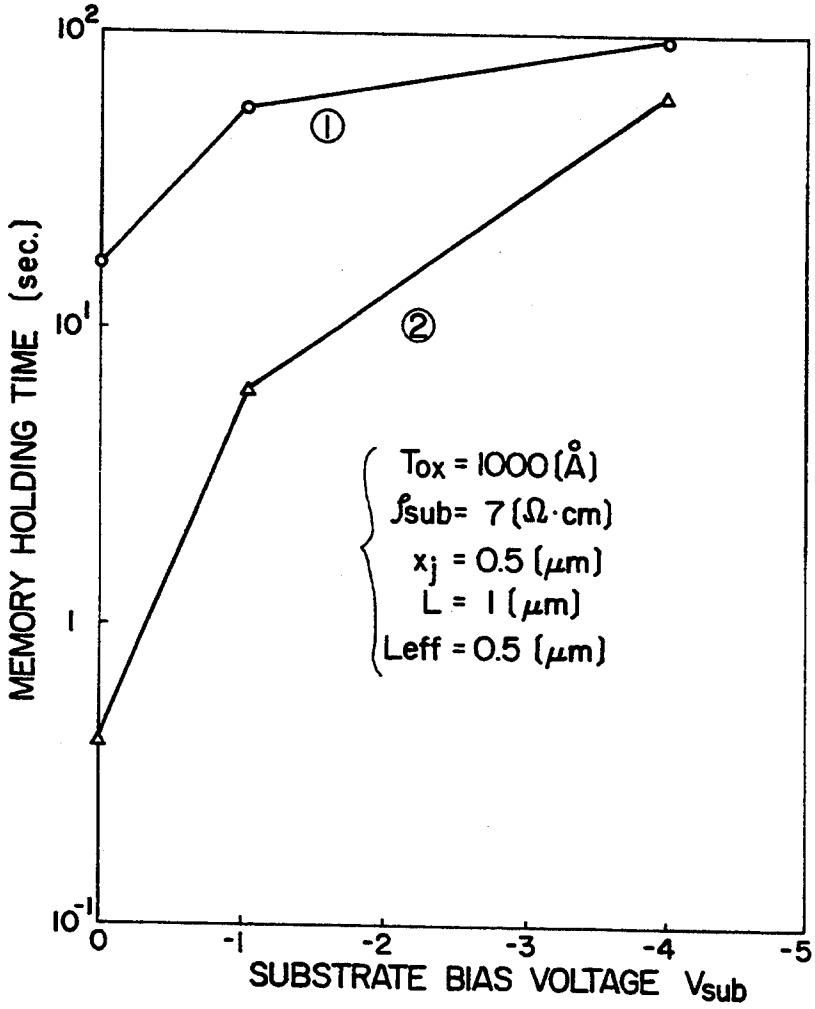
MEMORY HOLDING TIME (sec.)
10²
10¹
1
10⁻¹
①
②
Tox = 1000 (Å)
ρsub = 7 (Ω·cm)
xj = 0.5 (μm)
L = 1 (μm)
Leff = 0.5 (μm)
0
-1
-2
-3
-4
-5
SUBSTRATE BIAS VOLTAGE Vsub

FIG. 13

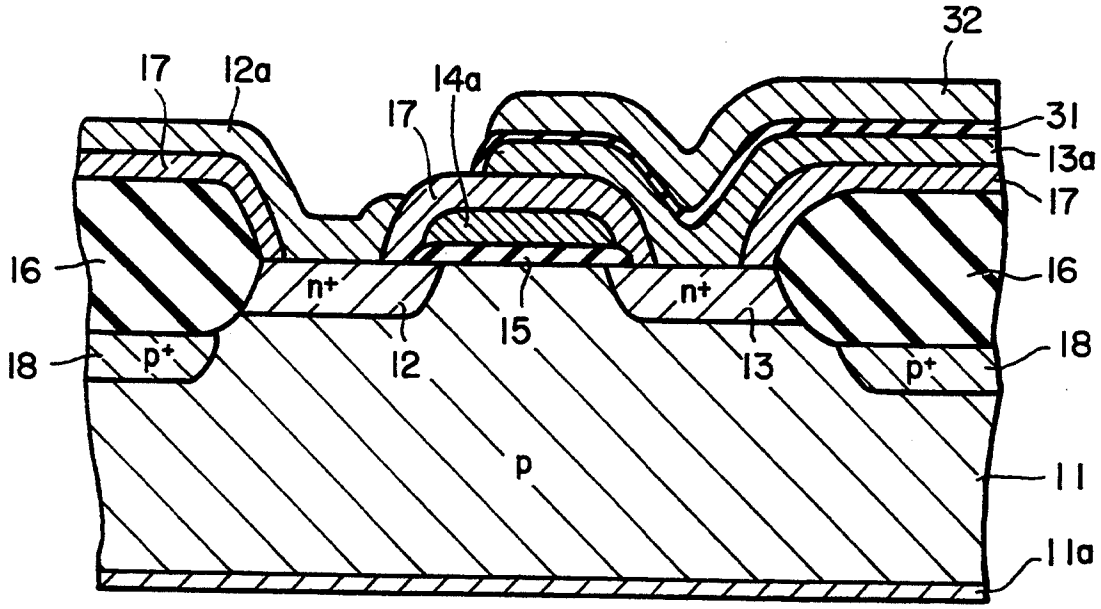
32
17
12a
14a
17
31
13a
17
16
n+
n+
16
15
18
p+
12
13
p+
18
p
11
11a

FIG. 14

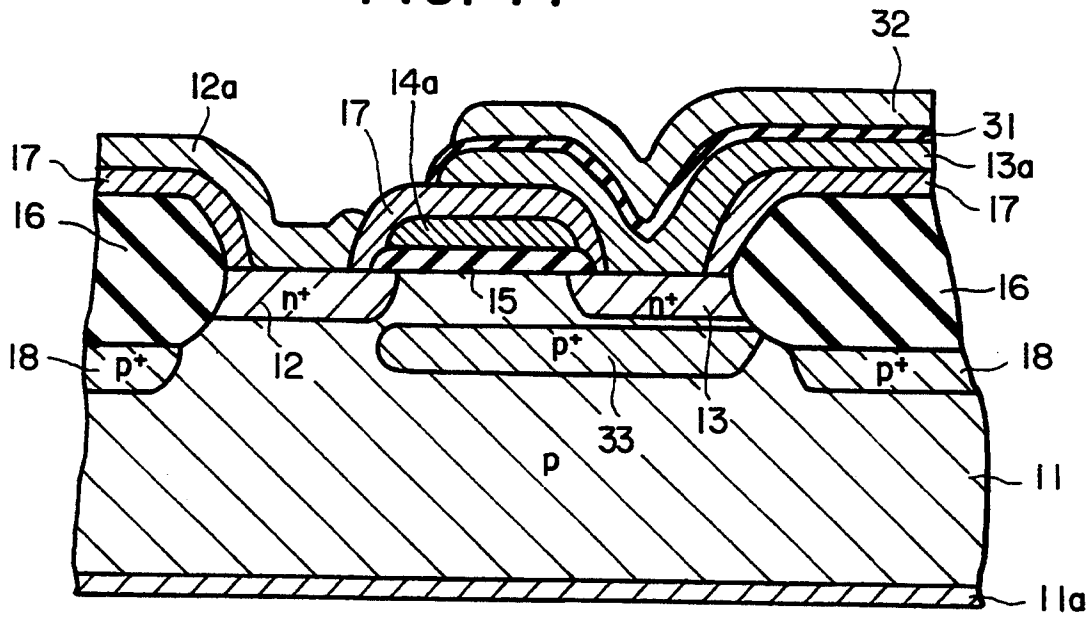
32
12a
14a
17
31
17
13a
16
17
n+
15
n+
16
18
p+
12
p+
p+
18
33
13
p
11
11a

FIG. 15

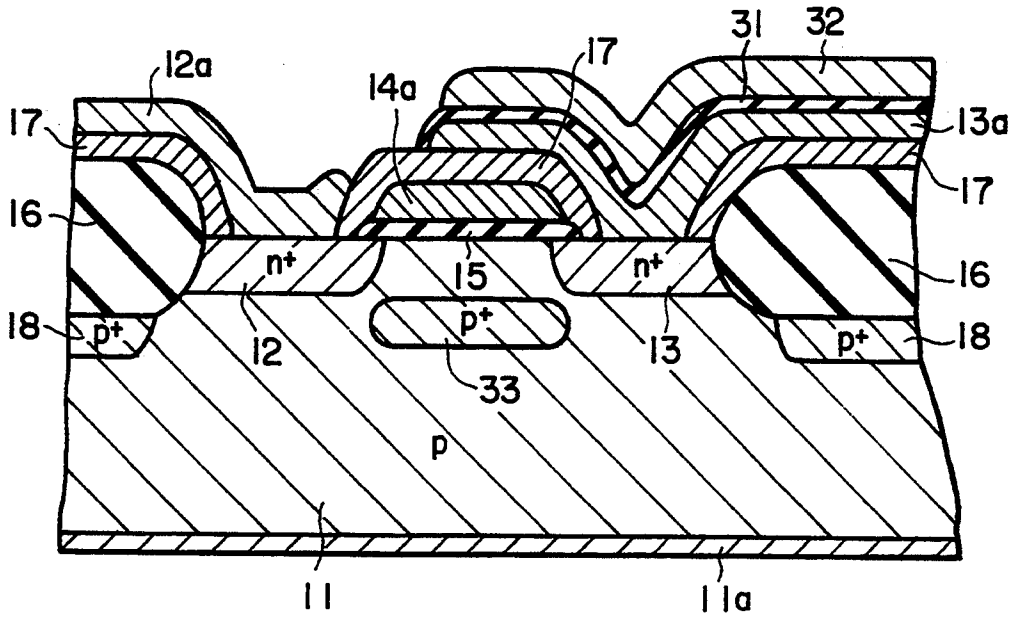
31
32
12a
17
14a
17
13a
17
16
n+
15
n+
16
18
p+
12
p+
13
p+
18
33
p
11
11a

FIG. 16

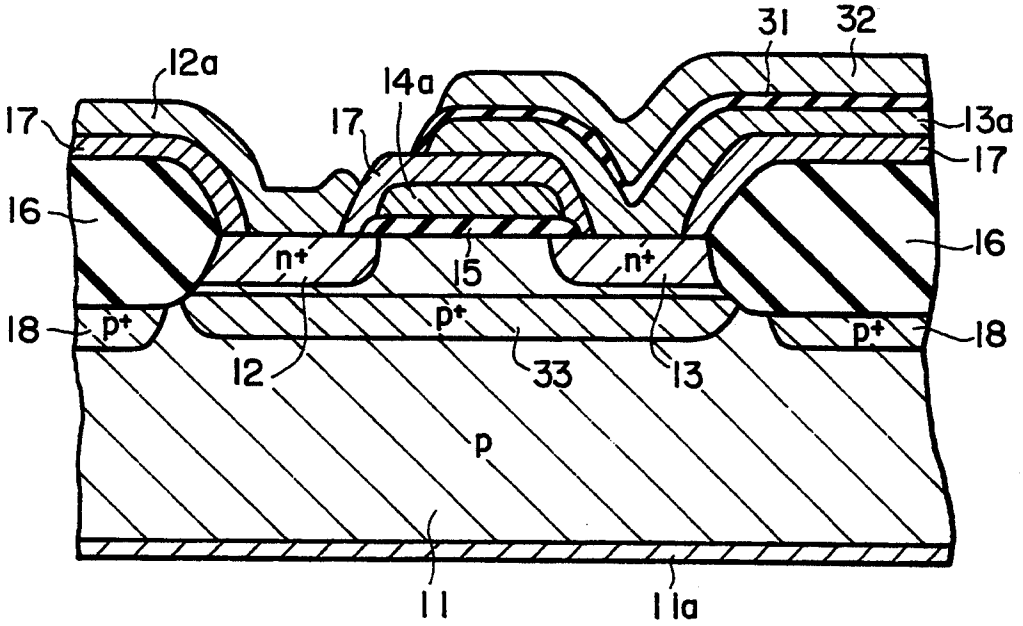
31
32
12a
14a
17
17
13a
17
16
n+
15
n+
16
18
p+
p+
p+
18
12
33
13
p
11
11a

FIG. 17

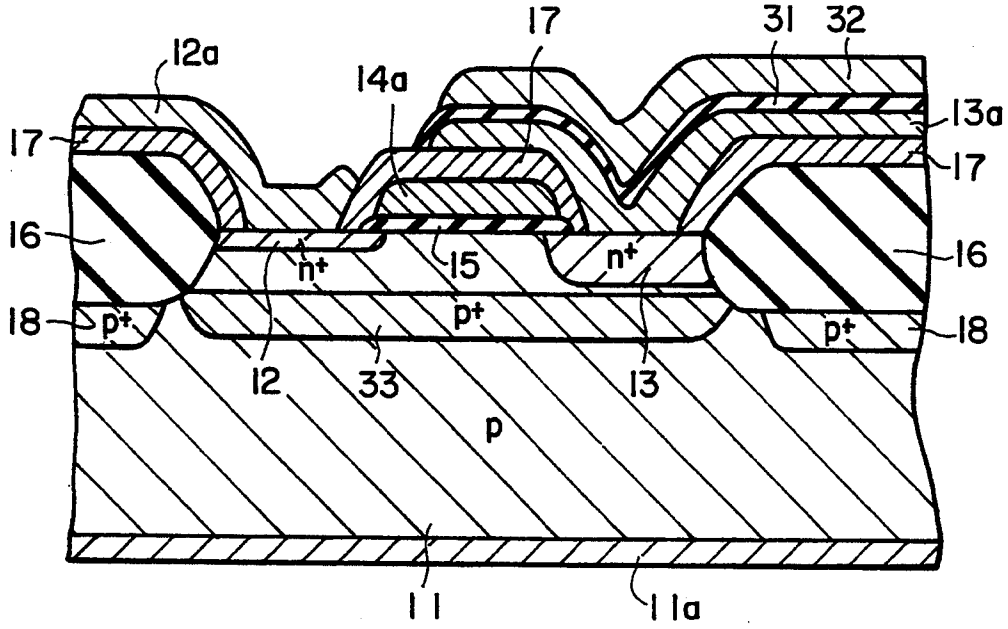
17
31
32
12a
14a
13a
17
17
16
16
n+
15
n+
18
p+
p+
p+
18
12
33
13
p
11
11a

FIG. 18

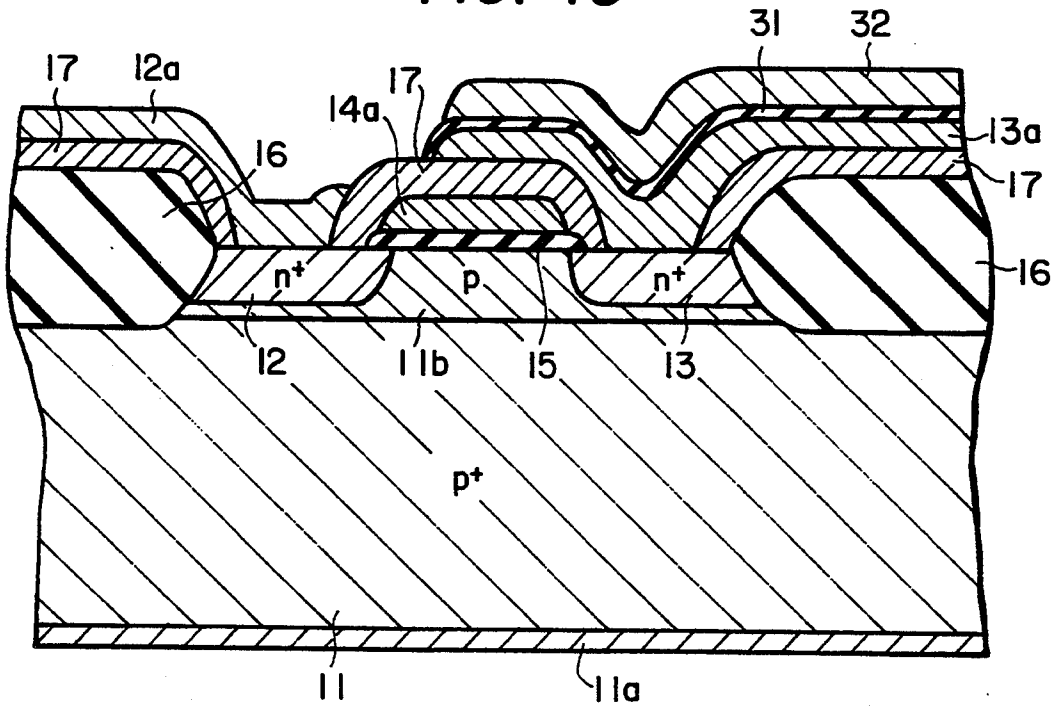
31
32
17
12a
17
14a
13a
16
17
16
n+
p
n+
12
11b
15
13
p+
11
11a

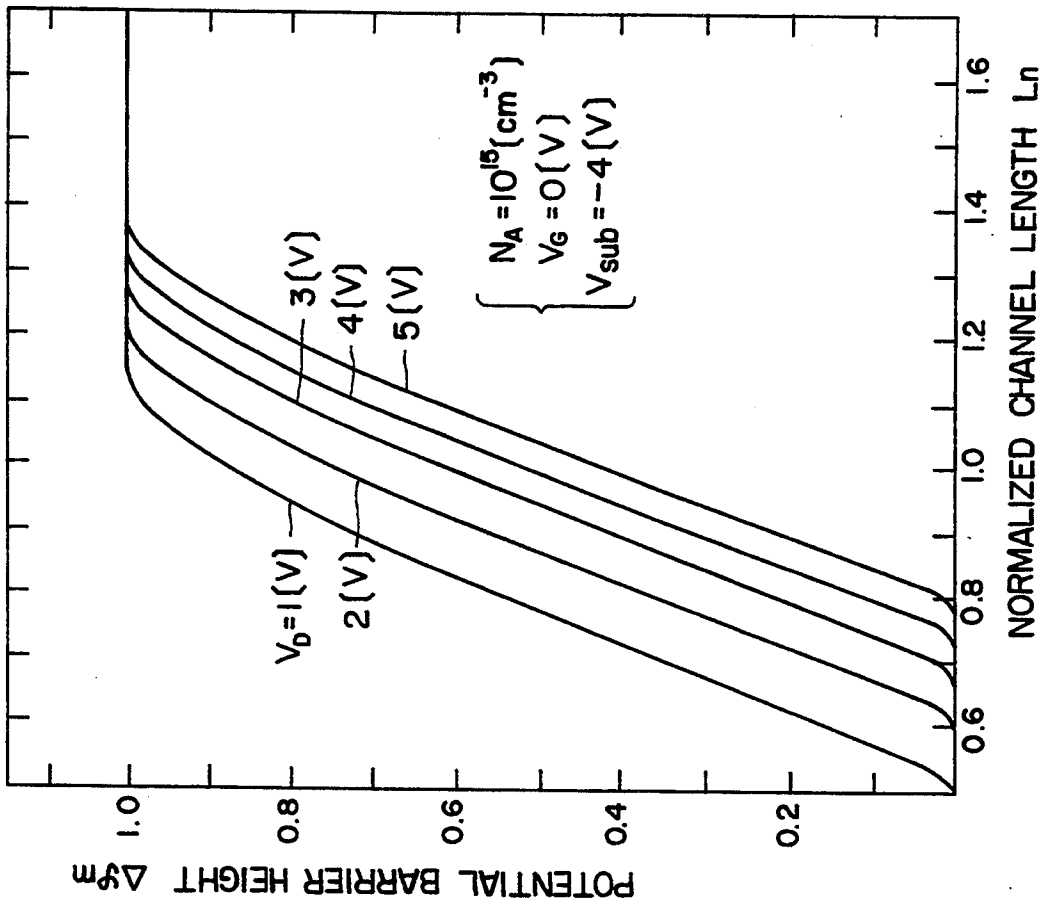
FIG. 21
POTENTIAL BARRIER HEIGHT Δφm
1.0
0.8
0.6
0.4
0.2
0.6
0.8
1.0
1.2
1.4
1.6
NORMALIZED CHANNEL LENGTH Ln
V_D=1(V)
2(V)
3(V)
4(V)
5(V)
N_A=10^{15}(cm^{-3})
V_G=0(V)
V_{sub}=−4(V)

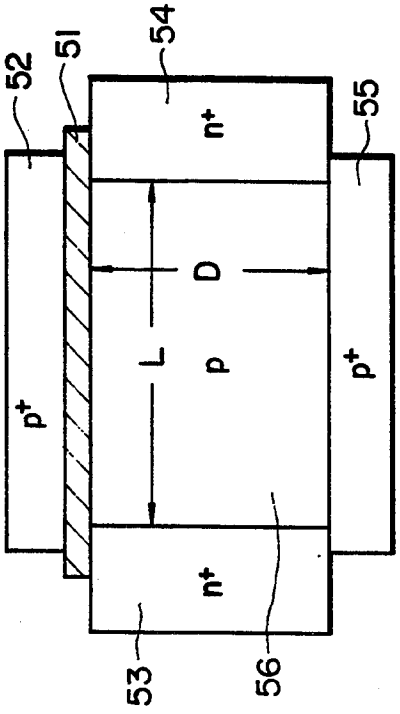
FIG. 19
p+
52
51
54
n+
55
p+
L
D
p
n+
53
56

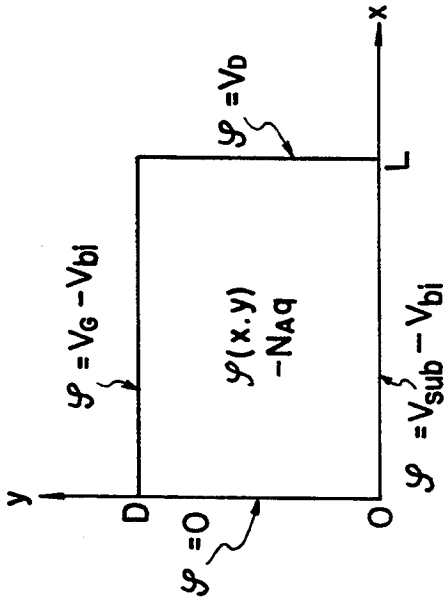
FIG. 20
y
x
D
0
L
φ=0
φ=V_G−V_{bi}
φ(x,y)
−N_Aq
φ=V_D
φ=V_{sub}−V_{bi}

FIG. 23

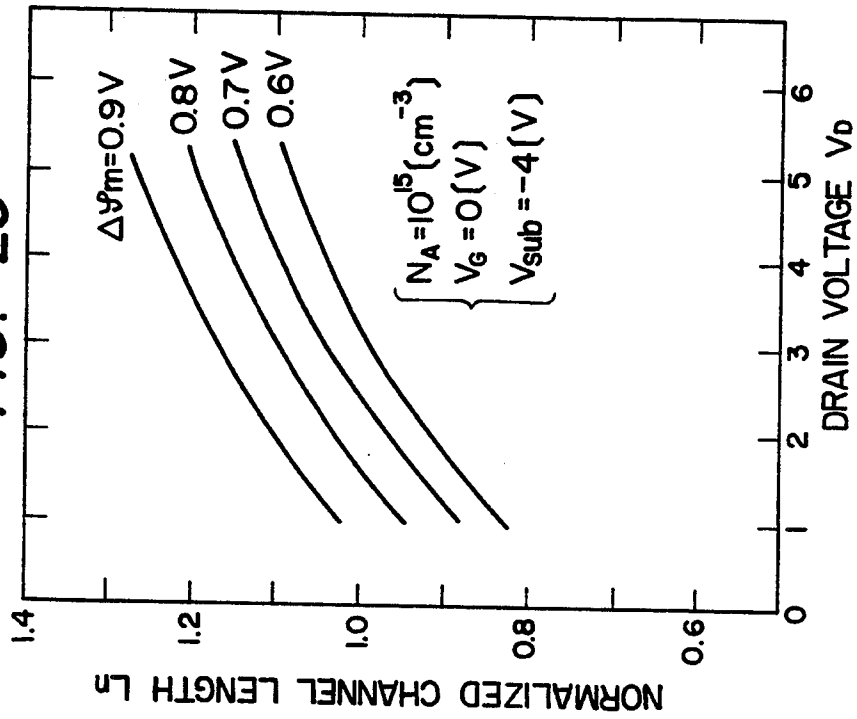
NORMALIZED CHANNEL LENGTH Ln
1.4
1.2
1.0
0.8
0.6
0
1
2
3
4
5
6
DRAIN VOLTAGE VD
Δϑm=0.9V
0.8V
0.7V
0.6V
NA=10^15(cm^-3)
VG=0(V)
Vsub=-4(V)

FIG. 22

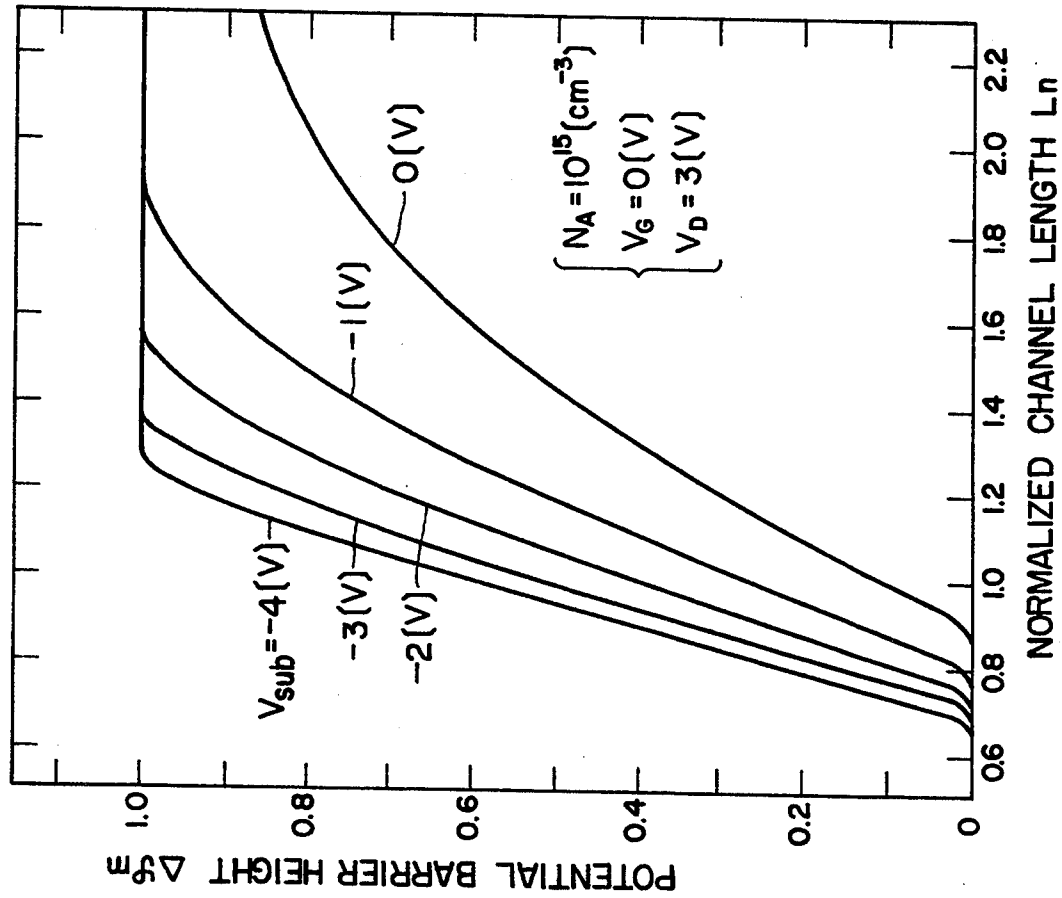
POTENTIAL BARRIER HEIGHT Δϑm
1.0
0.8
0.6
0.4
0.2
0
0.6
0.8
1.0
1.2
1.4
1.6
1.8
2.0
2.2
NORMALIZED CHANNEL LENGTH Ln
Vsub=-4(V)
-3(V)
-2(V)
-1(V)
0(V)
NA=10^15(cm^-3)
VG=0(V)
VD=3(V)

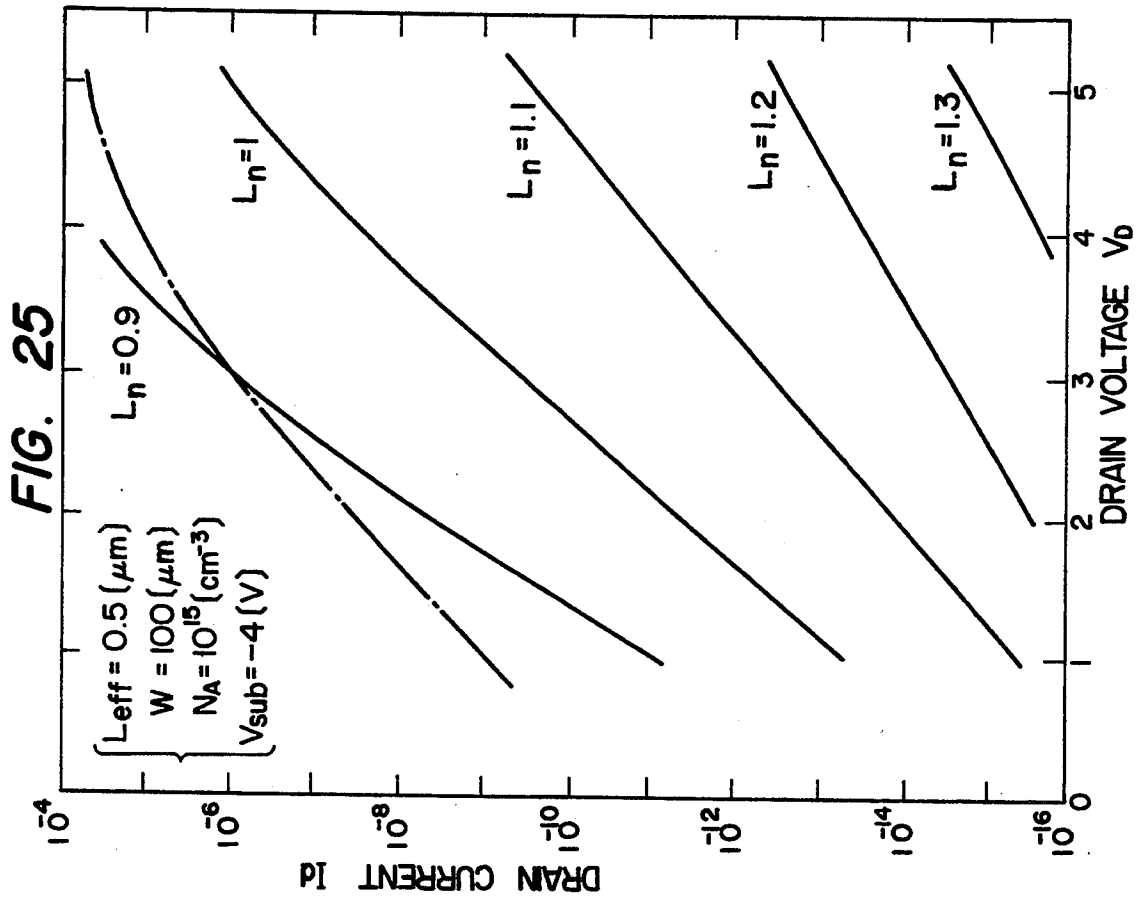
FIG. 25
Leff = 0.5 (μm)
W = 100 (μm)
NA = 10^15 (cm^-3)
Vsub = -4 (V)
Ln = 0.9
Ln = 1
Ln = 1.1
Ln = 1.2
Ln = 1.3
DRAIN CURRENT Id
DRAIN VOLTAGE VD

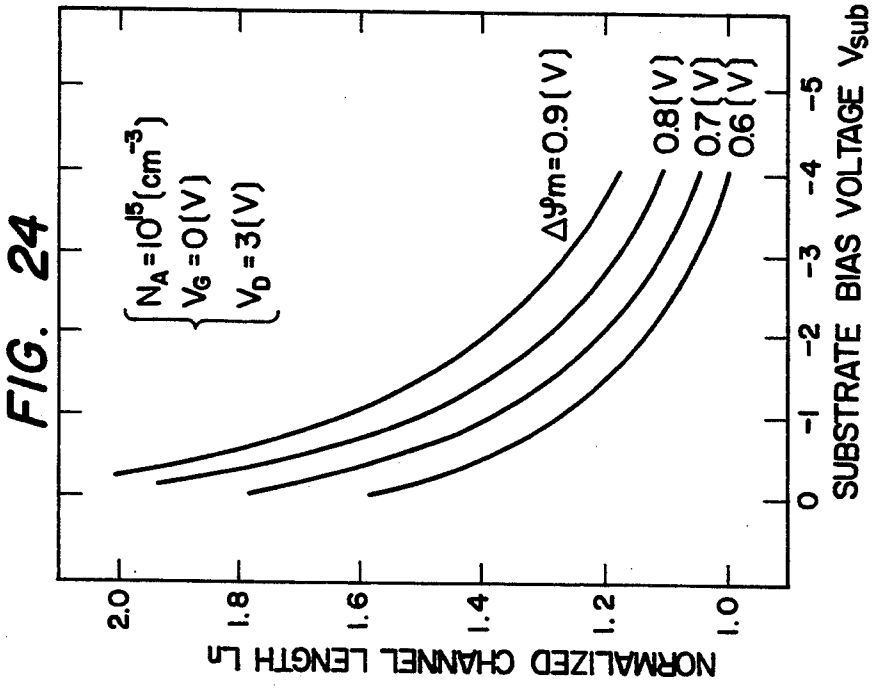
FIG. 24
NA = 10^15 (cm^-3)
VG = 0 (V)
VD = 3 (V)
Δφm = 0.9 (V)
0.8 (V)
0.7 (V)
0.6 (V)
NORMALIZED CHANNEL LENGTH Ls
SUBSTRATE BIAS VOLTAGE Vsub

FIG. 26

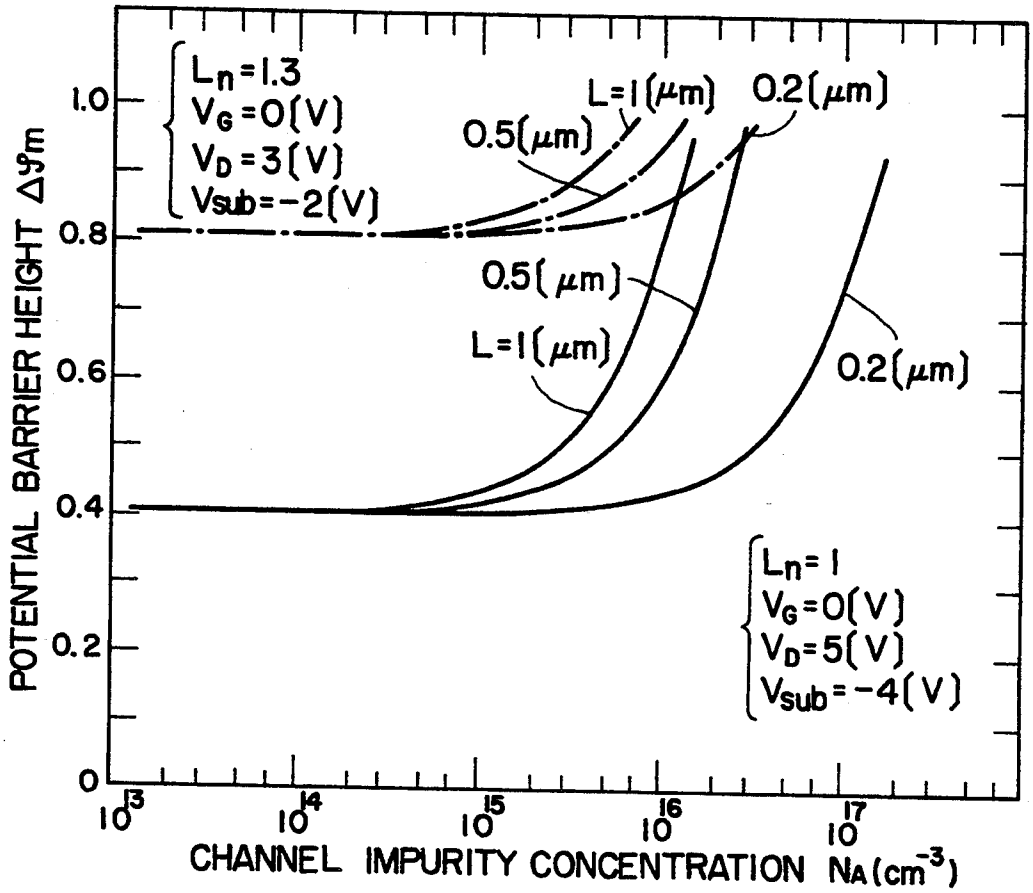
Ln=1.3
VG=0(V)
VD=3(V)
Vsub=-2(V)
L=1(μm)
0.2(μm)
0.5(μm)
0.5(μm)
L=1(μm)
0.2(μm)
Ln=1
VG=0(V)
VD=5(V)
Vsub=-4(V)
POTENTIAL BARRIER HEIGHT Δφm
1.0
0.8
0.6
0.4
0.2
0
10^13
10^14
10^15
10^16
10^17
CHANNEL IMPURITY CONCENTRATION NA(cm^-3)

FIG. 27

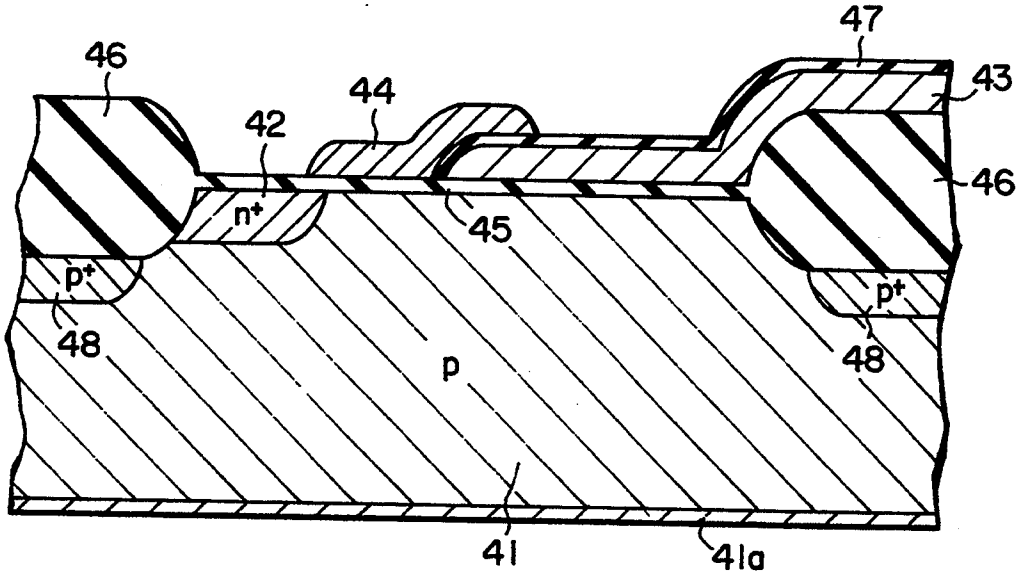
46
47
43
44
42
46
n+
45
p+
p+
48
48
p
41
41a

FIG. 28

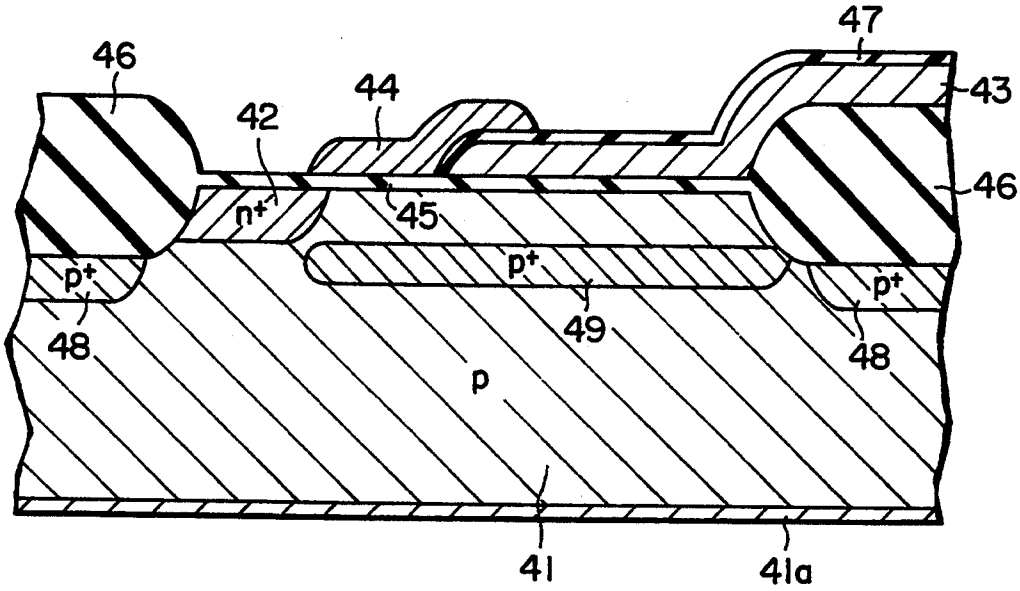
47
46
44
43
42
46
n+
45
p+
p+
p+
49
48
48
p
41
41a

FIG. 29

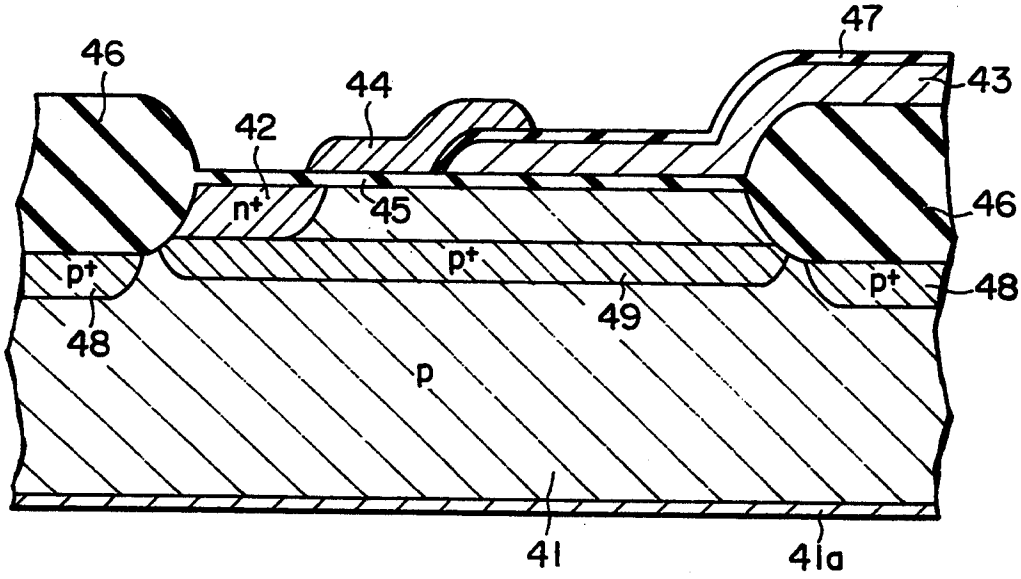
47
46
44
43
42
46
n+
45
p+
p+
p+
48
49
48
p
41
41a

FIG. 30

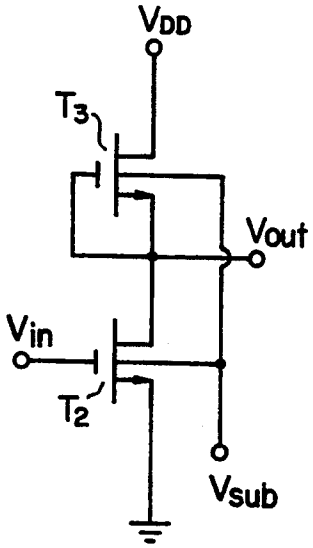

FIG. 31

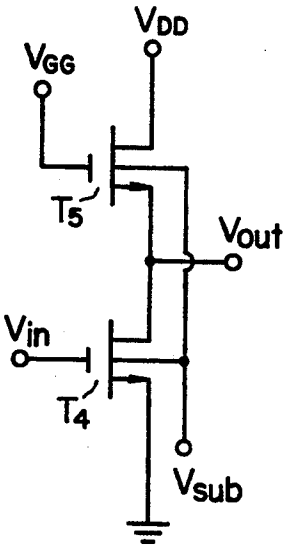

FIG. 32

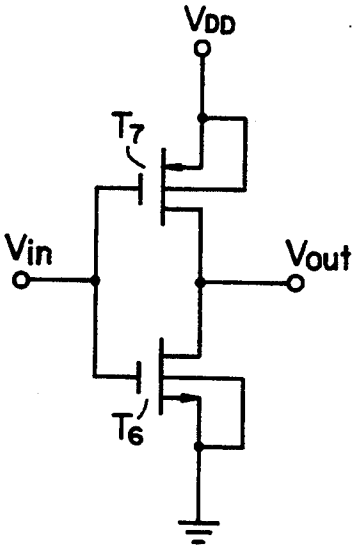

FIG. 35

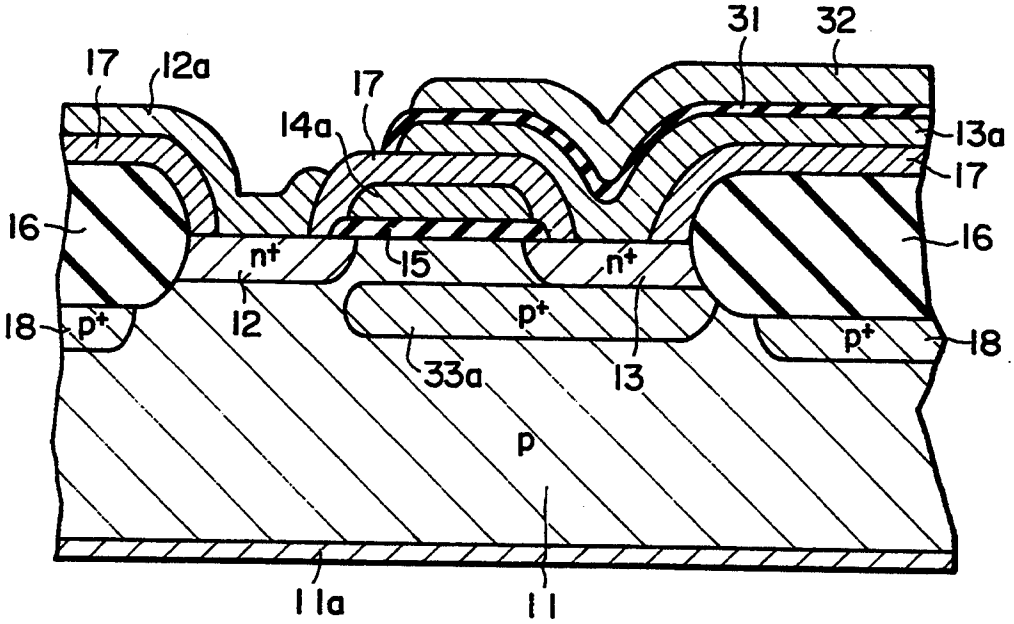

FIG. 33

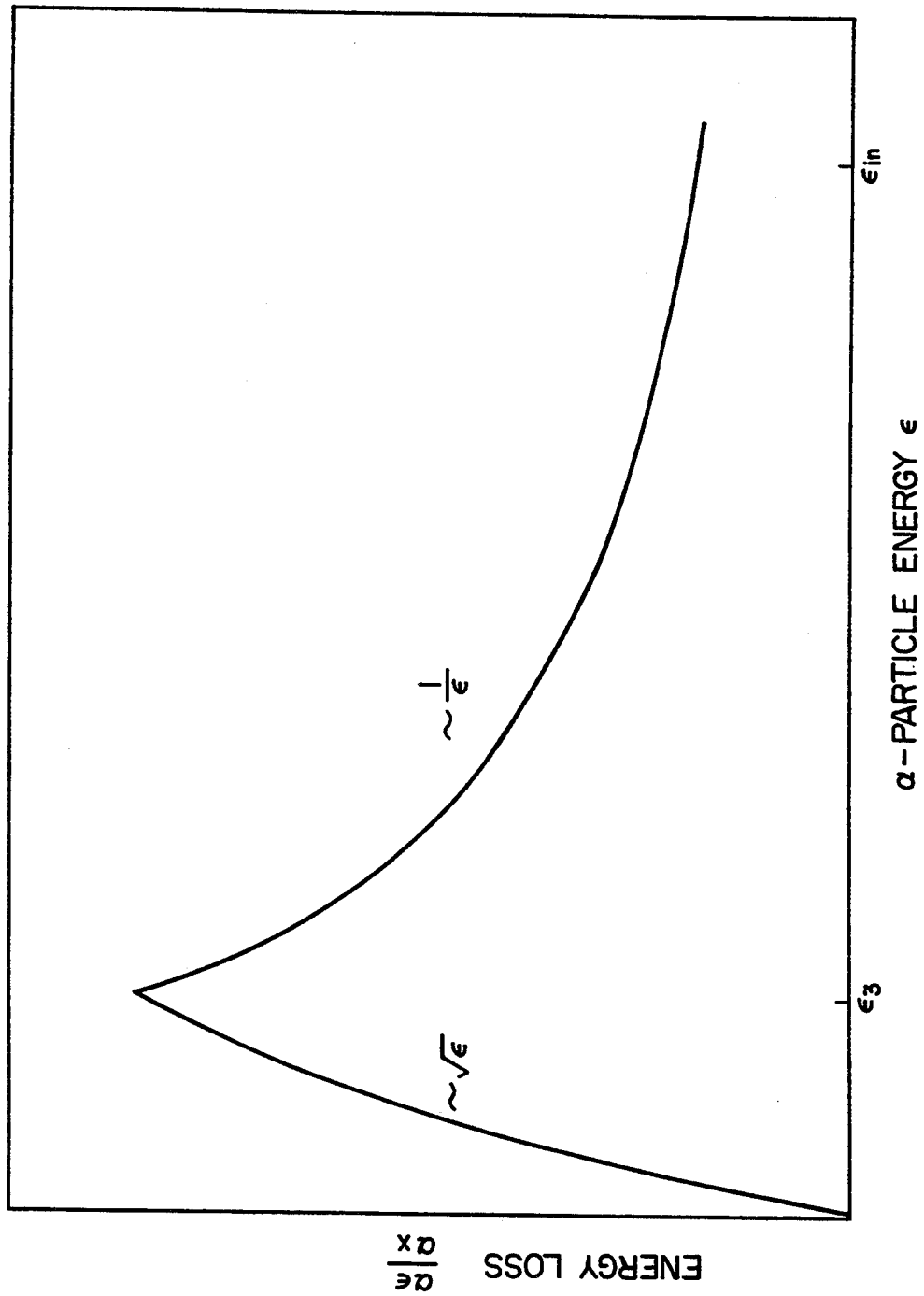
ENERGY LOSS
$\frac{d\epsilon}{dx}$
$\sim\sqrt{\epsilon}$
$\sim\frac{1}{\epsilon}$
ϵ_3
ϵ_{in}
α-PARTICLE ENERGY ε

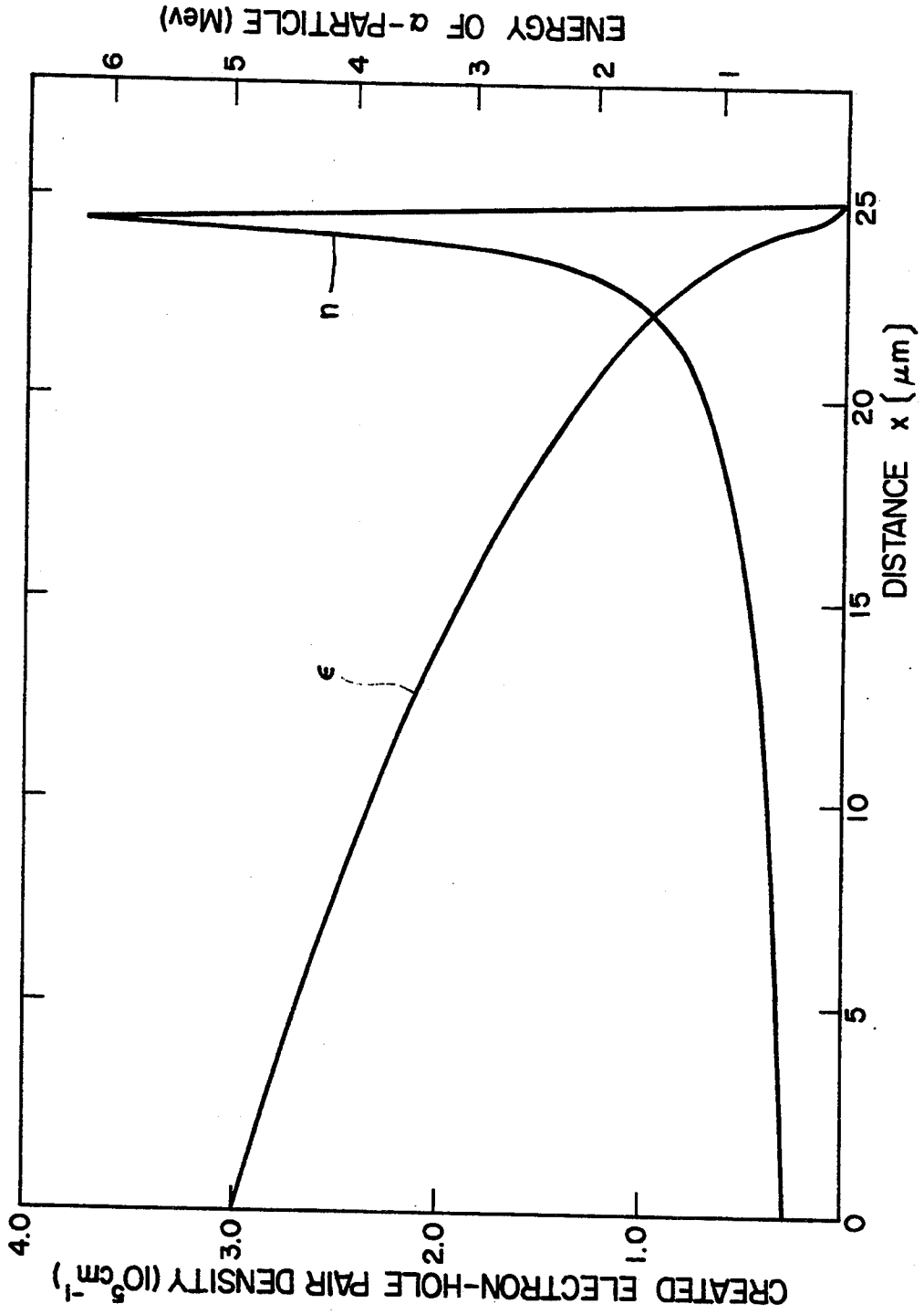
ENERGY OF α-PARTICLE (Mev)
6
5
4
3
2
1
n
ε
25
20
15
10
5
0
DISTANCE x (μm)
4.0
3.0
2.0
1.0
CREATED ELECTRON-HOLE PAIR DENSITY ($10^5 cm^{-1}$)

FIG. 34

FIG. 36

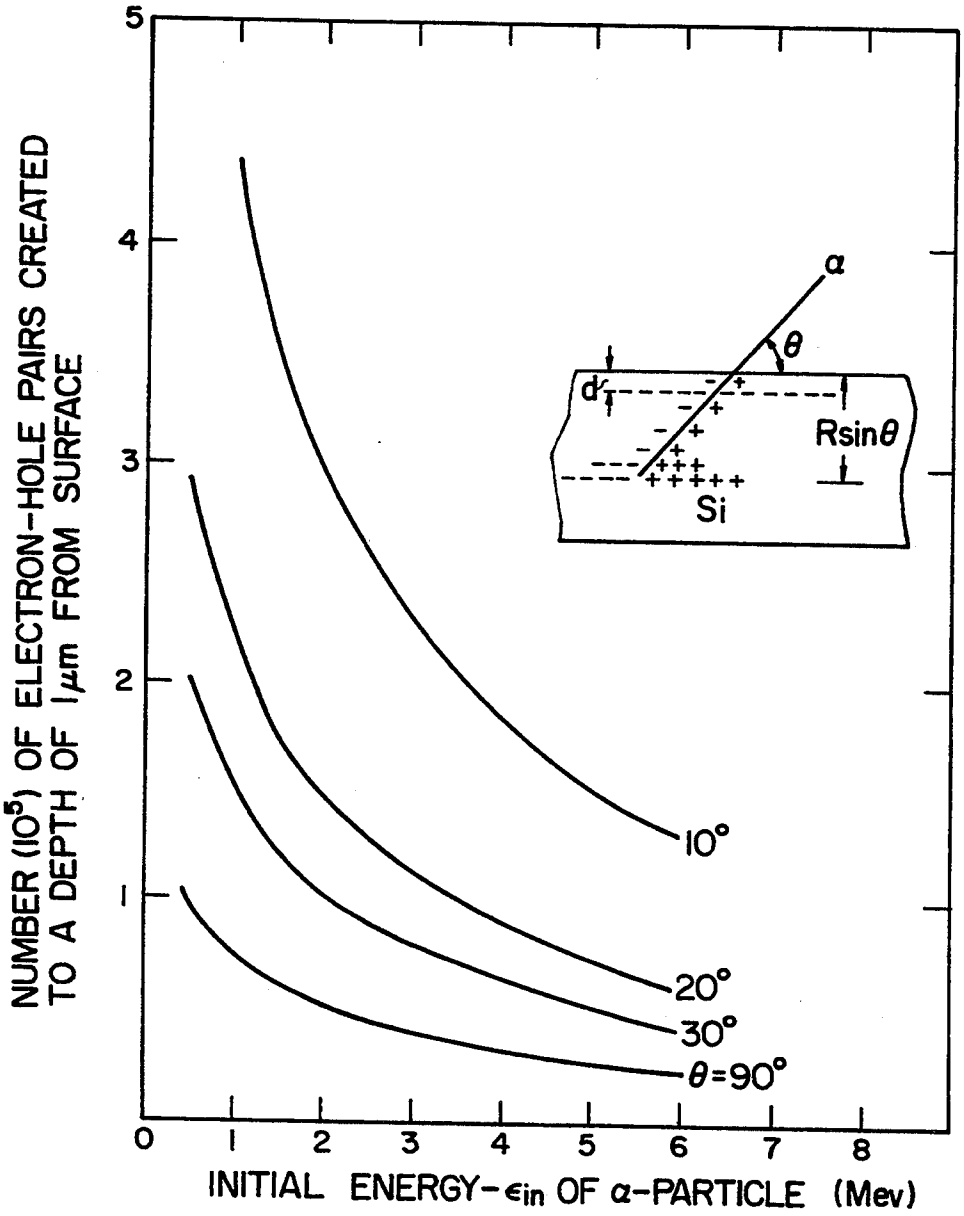
NUMBER (10^5) OF ELECTRON-HOLE PAIRS CREATED TO A DEPTH OF 1μm FROM SURFACE
INITIAL ENERGY-ϵ_{in} OF α-PARTICLE (Mev)
0
1
2
3
4
5
6
7
8
10°
20°
30°
θ=90°
α
θ
Rsinθ
Si

FIG. 37

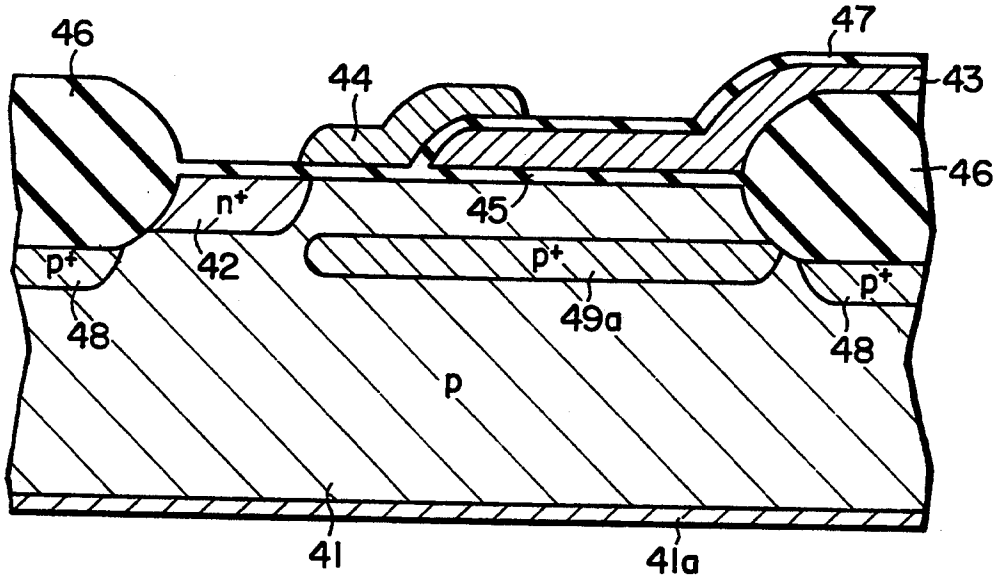

FIG. 38

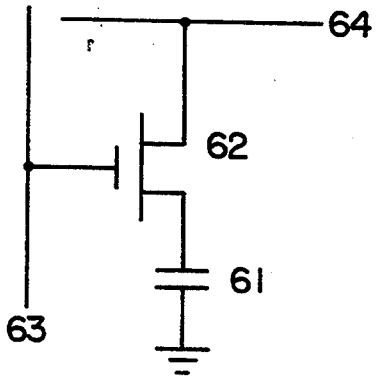

FIG. 39

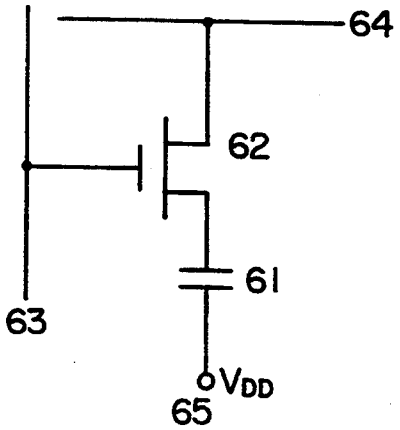

SHORT CHANNEL MOSFET WITH BURIED ANTI-PUNCH THROUGH REGION

This is a continuation of application Ser. No. 179,782, filed Aug. 20, 1980, which was abandoned upon the filing hereof.

RELATED APPLICATIONS

This application is related to the Nishizawa application Ser. No. 20,498, filed Mar. 14, 1979, Nishizawa et al application Ser. No. 167,343 filed Jul. 10, 1980, which is a continuation of the abandoned parent application Ser. No. 867,298 filed Jan. 5, 1978 and the Nishizawa et al application Ser. No. 238,968 filed Feb. 27, 1981, which is a continuation of the abandoned parent application Ser. No. 32,219 filed Apr. 23, 1979.

BACKGROUND OF THE INVENTION

FIELD OF THE INVENTION

The present invention relates to a semiconductor device, and more particularly to a semiconductor device such as an insulation-gate transistor which allows a high packing density integration and effects a good holding of memory contents and which does not make soft errors induced by alpha-particle irradiation. Also the invention concerns such semiconductor devices serving as a semiconductor memory and a logic circuitry.

A remarkable development is under way in the field of high packing density integration of semiconductor memories, especially in the field of dynamic random access memory (hereinafter to be referred to as d-RAM) which refreshes its memory contents at certain time intervals. Recently, there have been placed on the market 64 kilo-bit d-RAMs, and development of 256 kilobit d-RAMs is under way. High packing density integration of d-RAMs whose circuit arrangement has gone to such an extreme end as will not be simplified easily any further than the "one transistor-one capacitor" type is attained only by making the sizes of the respective structural components extremely fine. Such a trend of development has given rise to the tendency for progressively shortening the distance between the source region and the drain region (hereinafter to be referred to as the channel length) in insulation-gate transistors (hereinafter to be referred to as MOS transistors). However, in case the channel length of such transistors is reduced, there arises the inconvenience that, even when the gate potential of the transistor is zero-biased in order to render the transistor non-conductive, there flows a leakage current between the source region and the drain region so that the memory contents will become extinguished in a very short period of time, and the device will not operate to serve as a memory.

In the currently practiced process of making LSI devices using silicon, it is often the case to arrange a MOS field effect transistor (hereinafter to be referred to as MOS-FET) which is a component of the LSI, in such way as mentioned in FIG. 1. In order to cause a high-speed operation, this MOS-FET is formed to have an n-channel structure. In FIG. 1 which represents a prior art device, a p type region **11** represents a substrate. Also, two main electrodes are provided in a symmetrical pattern, so that an n+ type region **12** represents, for example, a source region, and an n+ type region **13** represents, for example, a drain region. Numeral **14** represents a gate region serving as a controlling electrode which is comprised of an n+ type polysilicon, and which is formed by relying on a known usual process of manufacture. It should be understood that this n+ type polysilicon gate region may be substituted by a metal gate region such as aluminum, molybdenum and tungsten. Numeral **15** represents a gate oxide film, **16** a field oxide film, and **17** a PSG film. Numerals **12*a*** and **13*a*** represent a source electrode and a drain electrode, respectively, which are made of a metal such as aluminum. Numeral **18** represents a p+ type region which serves as a channel-stopper region for inhibiting the tendency of formation of a current channel between the field oxide film **16** and p type substrate **11**. It should be understood here that the gate oxide film **15** and like films can locally contain a Si_3N_4 film. Also, it is usual to provide a passivation film on the surface of the device shown in FIG. **1**.

By using the MOS-FET having basically the arrangement as shown in FIG. **1**, there may be formed a d-RAM cell, for example, the following two types of arrangements. Instead of providing an electrode directly on one of the two main electrode regions, for example, on the drain region **13** of this MOS-FET, there may be provided thereon an insulating film made of SiO_2, and an electrode is provided via this insulating film. Alternatively, there may be provided an n+ type polysilicon layer on the drain region **13**, and the surface of this polysilicon layer is oxidized for a very small distance to provide a thin oxide film (SiO_2), and an electrode is provided on this oxide film. The former arrangement is such that a capacitor, i.e. a storage capacitor, is formed by the n+ type region **13**, the insulating oxide film and the electrode **13*a***. The latter arrangement is such that a capacitor or a storage capacitor is formed by the electrode **13*a***, the oxide film and the n+ type polysilicon layer. Such arrangements each serves as a d-RAM cell comprising one transistor and one capacitor.

Experimental samples are made for two kinds of substrates and gate oxide films having two kinds of thicknesses T_{ox}, using the same manufacturing parameters excepting the channel length L (mask level). The memory retention characteristics of these samples are evaluated, and the result is described hereinbelow. The source region **12** and the drain region **13** are formed by ion-implantation of arsenic (As, implantation voltage: 100 kV, dose: 1×10^{15} cm^{-2}) to a depth of X_j of about 0.5 μm. Also, there is given a channel doping with boron (B, implantation voltage: 30 kV, dose: 3×10^{11} cm^{-2}). The gate width is set at 100 μm for each sample, and the thickness T_{ox} of gate oxide film is set at 500 Å and 1000 Å, respectively, and the resistivity ρ_{sub} of the p type substrate **11** is set at about 7 Ωcm and about 20 Ωcm, respectively.

By the use of a circuit arrangement of the above-mentioned d-RAM having a terminal of its storage capacitor C_s grounded as shown in FIG. **2**, its memory retention characteristic is evaluated.

In FIG. **2**, reference numeral **21** represents a word line, and **22** a bit line. Numeral **23** represents a MOS-FET T_1, and **24** a storage capacitor C_s. To effect "write-in", a write-in voltage V_w is applied to the bit line **22**, while a voltage V_G is applied to the word line **21**. In case this MOS-FET T_1 is an n-channel type, these voltages V_w and V_G are positive voltages, respectively. When a positive voltage V_w is applied to the bit line **22**, it should be understood that when the MOS-FET T_1 is

rendered conductive by the application of a positive voltage V_G to the word line **21**, there flows a current to the storage capacitor C_s, and this storage capacitor C_s is charged to a value represented substantially by $V_w - V_{th}$, wherein V_{th} represents a threshold voltage of the MOS-FET T_1. In this state of the FET, electrons are allowed to flow out from the n^+ type drain region **13** which serves as an electrode of storage capacitor C_s, so that this region **13** is positively charged due to shortage of electrons therein. Then, the voltage V_G of the word line **21** is set back to zero, and thereafter the voltage V_w of the bit line **22** is removed. Whereupon, the write-in operation is completed. In the state that the memory contents are being retained, there is no need to apply an external voltage to any one of the terminals of the memory cell having the circuit arrangement of FIG. **2**. As stated above, in this memory content holding state, the n^+ type region **13** is short of electrons and is charged positive, and this n^+ type region **13** is reverse biased relative to the p type substrate **11**. This storing mode is called an electron-depletion storing mode. Accordingly, the contents of memory will be preserved for an extended period of time. The memory retention time in the electron-depletion storing mode is always longer than that in the electron-accumulation storing mode where the amount of excess electrons is stored in the n^+ type storage region.

Although the biasing of the p type substrate **11** of the MOS-FET T_1 has not been described with respect to FIG. **2**, in case there is the fear that the contents of memory would become extinguished due to a sub-threshold current attributable to a shortened length of the effective channel of the MOS-FET T_1, there is applied a substrate bias voltage, which is a negative voltage in this example, to prevent such extinguishment of the memory contents.

The memory content holding characteristic is measured in the manner as stated above. Such characteristic for three different samples is shown in FIGS. **3**, **4** and **5**, respectively. These data are observed in a d-RAM cell operating at room temperature. The applied voltages are: $V_G=5$ V, and $V_w=5$ V. The memory holding time means a period of time starting from the time at which the word line voltage is returned to zero up to the time when the voltage stored in the storage capacitor C_s has dropped to about $\frac{1}{2}$. The memory holding time is plotted as a function of the effective channel length L_{eff}. This L_{eff} should be noted to be shorter by about 0.5 μm as compared with the channel length at mask level. In FIG. **3**, marks ①, ②, ③ and ④ correspond to the substrate bias voltage of 0 V, −1 V, −2 V and −4 V, respectively. FIG. **3** shows the result of the sample with its gate oxide film has a thickness $T_{ox}=1000$ Å and the resistivity of the p type substrate is $\rho_{sub}=7$ Ωcm. FIG. **4** is the result of a sample wherein $T_{ox}=500$ Å and $\rho_{sub}=7$ Ωcm. FIG. **5** shows the result of a sample wherein $T_{ox}=500$ Å, and $\rho_{sub}=20$ Ωcm. In all of these samples, the depths of the n^+ type source region and the n^+ type drain region are invariably 0.5 μm, and the doping amounts of the channels by implantation of boron (B) are identical such as $5\sim7\times10^{16}$ cm^{-3}. In case L_{eff} is long, the memory holding time in each of these samples is long, being about 100 seconds. However, for a shorter L_{eff}, the holding time sharply becomes shorter. In the sample of FIG. **5** in which L_{eff} is 2.5 μm, the result of observation is such that even by the application of a substrate bias voltage V_{sub}, the memory holding time lasts no longer than about 100 μsec. In other words, with respect to the sample shown in FIG. **5**, it should be understood that unless L_{eff} is 3.5 μm or greater, the device will no longer operate as a d-RAM. On the other hand, with the sample shown in FIG. **3**, it will be understood that, if the substrate bias voltage V_{sub} is set at −4 V, the memory contents are held for a sufficient period of time, even if the effective channel length is reduced up to $L_{eff}=1.5$ μm. However, even in this sample shown in FIG. **3**, in case the effective channel length is reduced to $L_{eff}=0.5$ μm, the device can no longer be used as a d-RAM. In the sample shown in FIG. **4**, even when $V_{sub}=-4$ V, the memory contents-holding time is noted to begin dropping when $L_{eff}=1.5$ μm.

As will be understood from the foregoing description of samples, in case the channel length is shortened for the purpose of improving the packing density, if the channel length is reduced to about L=1 μm (L_{eff}=-about 0.5 μm), the memory content holding time drops sharply so that the device will no longer be operated as a d-RAM.

Next, explanation will be made of the reasons for the phenomenon that, in case the channel length is reduced as shown in FIGS. **3** to **5**, the memory contents become extinguished sharply. A reduced length of channel gives rise to the effect of lowering, due to the effect provided by the source and drain regions, the potential barrier which, in case the channel length is not shortened, serves to prevent the flow of electrons across the source region and the drain region. In a sample having a long channel, the height of the potential barrier in the channel region is controlled almost solely by both the gate voltage V_G and the substrate voltage V_{sub}. However, in case the length of channel is reduced, the potential barrier height will become controlled also by the source region potential and the drain region potential. In other words, a static induction effect which is noted in a static induction transistor (SIT) begins to appear in the device having a substantially reduced length of channel, so that a current will become allowed to flow across the source and the drain regions even without an application of a gate voltage. Such current will hereunder be called an SIT current or a sub-threshold current. In FIG. **6** will be shown the relationship between the drain current I_d and the drain voltage V_d (a voltage relative to the source voltage when the latter is zero) for the sample shown in FIG. **3** but wherein the channel length L at mask level is 1 μm ($L_{eff}=0.5$ μm). The vertical axis represents the drain current I_d, and the horizontal axis represents the drain voltage V_d. FIG. **6** shows the fact that, even in case the gate voltage $V_G=0$, there flows a current I_d across the source and drain regions. It is needless to say that, when the magnitude of the negative substrate bias voltage V_{sub} is augmented, the drain current I_d will become smaller. That is, even when the gate voltage is set at $V_G=0$, there will begin to flow a current across the source and drain regions when a certain amount of voltage is applied therebetween.

In a d-RAM which is in the state that a voltage $V_m=V_w-V_{th}$ is written in the storage capacitor C_s and is stored therein, it should be understood that the voltage V_m is being applied across the source and drain regions. Accordingly, there naturally flows such drain current I_d as that shown in FIG. **6**, and thereby the stored voltage decreases progressively. The process of reduction of the stored voltage due to the current flowing across the source and drain regions can be analyzed easily. Since the device may be expressed in an equiva-

lent circuit as shown in FIG. 7, the voltage stored in the storage capacitor C_s will attenuate by the current which flows through the MOS-FET T_1. By designating the voltage of the storage capacitor C_s as V, the process of attenuation of the voltage can be expressed by the following formula:

$$-C_s\frac{dV}{dt} = I_d, \tag{1}$$

wherein t represents time.

As will be understood from FIG. 6, the subthreshold current I_d varies substantially exponentially relative to the voltage of the storage capacitor. That is, the subthreshold current can be expressed by $I_d=I_0e^{\alpha V}$, wherein I_0 and α can vary depending on the substrate bias V_{sub}. The abovementioned Formula (1) under an initial condition $V_0=V_m$ can be solved as follows:

$$V_t = \frac{1}{\alpha} l_n \frac{1}{\frac{\alpha I_0}{C_s} t + e^{-\alpha V_m}}. \tag{2}$$

The time required for V_t to become 1/r of the initial voltage V_m will be:

$$t_r = \frac{C_s}{\alpha I_0}\left(e^{-\frac{\alpha V_m}{r}} - e^{-\alpha V_m}\right). \tag{3}$$

The value obtained from calculation on the basis of r=2, and the value obtained from actual measurement are shown in FIG. 8. In FIG. 8, the memory-holding time is plotted as a function of the substrate bias voltage. In this Figure, mark o represents the value of measurement, and mark + represents the value of calculation. It will be noted that these two kinds of values are substantially in agreement with each other. More particularly, the attenuation of the stored voltage for a device having a reduced channel length is brought about by the subthreshold current flowing across the source and the drain regions. Next, comparison is made between FIG. 3 and FIG. 4. It will be noted that the memory-holding characteristic for a reduced channel device is poor with the sample shown in FIG. 4. In other words, the smaller the thickness T_{ox} of the gate oxide film becomes, the more the memory-holding characteristic degradates. This relationship will be described briefly as follows.

Referring back to FIG. 1, the gate region 14 of the n-channel MOS-FET is formed most frequently with an n+ type polysilicon. A sectional construction taken in one-dimensional direction from the gate region 14 toward the p type substrate 11 is shown in FIG. 9. The thickness of the p type substrate 11 is indicated by d. The gate oxide film 15 has a dielectric constant ϵ_2 and the p type substrate 11 has a dielectric constant ϵ_1. The potential profile when a reverse bias voltage V_a (including a built-in potential V_{bi}) is applied across the p type substrate 11 and the n+ type gate electrode 14 is expressed by the formula:

$$V_a = V_0 + V_{sc}, \tag{4}$$

and

$$\frac{\epsilon_2}{T_{ox}} V_0 = N_A q W,\ V_{sc} = \frac{N_A q}{2\epsilon_1}\cdot W_2, \tag{5}$$

wherein:

V_0 represents a voltage applied to the gate oxide film 15;

V_{sc} represents a voltage applied to the p type substrate;

N_A represents an impurity concentration of the p type substrate 11; and

q represents a unit charge.

From Formulas (4) and (5), the width W of the depletion layer in the p type substrate 11 and the voltage V_0 which is applied to the gate oxide film are obtained as follows:

$$W = \frac{\epsilon_1}{\epsilon_2} T_{ox}\left\{-1 + \sqrt{1 + \left(\frac{\epsilon_2}{\epsilon_1}\cdot\frac{W_a}{T_{ox}}\right)^2}\right\} \tag{6}$$

$$V_0 = \frac{N_A q \epsilon_1 T_{ox}^2}{\epsilon_2^2}\left\{-1 + \sqrt{1 + \left(\frac{\epsilon_2 W_a}{\epsilon_1 T_{ox}}\right)^2}\right\}. \tag{7}$$

Also, the intensities E_0 and E_s of electric fields in the gate oxide film 15 and in the p type region 11 are expressed as:

$$E_0 = \frac{N_A q \epsilon_1 T_{ox}}{\epsilon_2^2}\left\{-1 + \sqrt{1 + \left(\frac{\epsilon_2}{\epsilon_1}\cdot\frac{W_a}{T_{ox}}\right)^2}\right\}, \tag{8}$$

and

$$E_s = \frac{N_a q T_{ox}}{\epsilon_2}\left\{-1 + \sqrt{1 + \left(\frac{\epsilon_2}{\epsilon_1}\cdot\frac{W_a}{T_{ox}}\right)^2}\right\}\cdot\frac{W-x}{W} \tag{9}$$

wherein:

$$W_a = \left(\frac{2\epsilon_1 V_a}{N_A q}\right)^{\frac{1}{2}},$$

and represents the width of the depletion layer when the voltage V_a is applied solely to the p type substrate 11.

The potential distribution within the p type substrate 11 is shown in FIG. 10 where the thickness T_{ox} of the gate oxide film is varied. This Figure represents the result when the gate potential is maintained at the same level of the source potential. The vertical axis represents the potential, and the horizontal axis represents the distance from the gate oxide film 15 up to the p type substrate 11. The Figure shows the state in which only a built-in potential V_{bi} is applied, when the substrate bias voltage $V_{sub}=0$. It should be noted here that V_{bi} represents a built-in potential at the junction of the n+ type region and the p type region. The symbol 0 given at the vertical axis represents a source potential. When $T_{ox}=0$, the potential profile takes the curve as indicated by (1), and the potential at the interface of the p type region is rendered to a same level as that of the source potential. As T_{ox} increases, the potential at the interface of the oxide film will increase as indicated by (2). When $T_{ox}=\infty$, i.e. when the oxide film has a substantially large thickness, the potential curve will assume constant patterns as shown by broken lines. Conversely, as T_{ox}

decreases, the interface potential approaches the potential of the source region. This means that electrons are allowed to enter easily into this lowered potential region from either the source region or the drain region, so that a current is thus allowed to flow.

The attempt to develop a short channel structure necessitates a further reduction of the thickness of the gate oxide film. As a result, the tendency that the surface potential drops and that accordingly the current is allowed to flow easily will become more conspicuous. Also, as the channel length is shortened further, the storage capacitance C_s becomes smaller. At the same time therewith, the write-in voltage V_w for writing-in the memory cell will decrease also. Since the electric charge Q which is .stored in the storage capacitor under the written-in state is given by C_sV_m, the value $Q=C_sV_m$ also naturally decreases as the length of the channel decreases. In case the storage capacitor C_s is formed with SiO_2 of 300 Å into 10 μm square in size, the storage capacitance C_s will be about 0.12 pF. The stored electric charge when V_m of 5 V is stored on this C_s will be: $Q=C_sV_m=6\times10^{-13}C$, which represents about 3×10^6 in number of the electrons stored or in number of shortage of electrons.

However, the energy of alpha-particles which are irradiated from the ceramic package or the like is said to be of the order of 5 MeV. When a single alpha-particle is irradiated within a semiconductor body, there will be produced about one million pairs of electrons and holes. This single alpha-particle which is irradiated constitutes an amount sufficient for cancelling out almost all of the electric charge which has been stored in the storage capacitor. In other words, even where other holding conditions are perfect, the electric charge which is being stored in the storage capacitor will become extinguished by the irradiation of only a single alpha-particle.

SUMMARY OF THE INVENTION

It is, therefore, a primary object of the present invention to provide a semiconductor device whose memory retention characteristic will not degradate even where the channel length of this device is shortened.

Another object of the present invention is to provide a semiconductor device of the type described above, whose memory holding characteristic will not degradate even where the gate oxide film thereof has a reduced thickness.

Still another object of the present invention is to provide a semiconductor device of the type described above, which permits a further improvement in packing density in view of the foregoing features.

Yet another object of the present invention is to provide a semiconductor device of the type described above, whose memory content will not become extinguished even by the introduction thereinto of an alpha particle.

A further object of the present invention is to provide a semiconductor device of the type described above, which is suitable for use as a d-RAM.

Still another object of the present invention is to provide a semiconductor device of the type described above, which is suitable for use as a CMOS.

BRIEF DESCRIPTION OF THE DRAWINGS

FIG. **1** is a diagrammatic sectional view, showing the structure of a conventional MOS-FET cell.

FIG. **2** is a circuit diagram of a known d-RAM cell.

FIGS. **3** to **5** are charts for explaining the dependency characteristic of memory holding time upon effective channel length of the MOS-FET of FIG. **1**.

FIG. **6** is a chart for explaining the dependency characteristic of drain current upon drain voltage.

FIG. **7** is a circuit diagram for analyzing memory holding characteristics.

FIG. **8** is a chart for explaining the dependency characteristic of memory holding time upon substrate bias voltage.

FIG. **9** is a diagrammatic illustration of a sectional structure in one dimensional direction as taken from the gate region to the p type substrate of the MOS-FET shown in FIG. **1**.

FIG. **10** is a chart showing the potential profile within the p type substrate at a location just below the gate oxide film in case of n^+ polysilicon gate.

FIG. **11** is a chart showing the potential profile within the p type substrate at a location just below the gate oxide film in case the gate region is formed with a p^+ type polysilicon.

FIG. **12** is a chart for explaining the dependency characteristic of memory holding time upon substrate bias voltage of an embodiment of the present invention.

FIGS. **13** to **18** are diagrammatic sectional views, showing the structures of d-RAM cell according to embodiments of the present invention.

FIG. **19** is a diagrammatic explanatory sectional view of a model device for analyzing potential profile.

FIG. **20** is a chart for explaining the boundary condition of the potential profile in the channel region of the model shown in FIG. **19**.

FIGS. **21** and **22** are charts for explaining the dependency characteristics of potential barrier height upon normalized channel lengths.

FIG. **23** is a chart for explaining the dependency characteristic of normalized channel length upon drain voltage for giving a constant potential barrier height $\Delta\phi m$.

FIG. **24** is a chart for explaining the dependency characteristic of normalized channel length upon substrate bias, for giving a constant potential barrier height $\Delta\phi m$

FIG. **25** is a chart for explaining the dependency characteristic of drain current upon drain voltage for various normalized channel lengths.

FIG. **26** is a chart for explaining the dependency characteristic of potential barrier height upon channel impurity concentration for various normalized channel lengths.

FIGS. **27** to **29** are diagrammatic sectional views, showing the structures of d-RAM cells according to embodiments of the present invention.

FIGS. **30** to **32** are circuit diagrams of inverters employing the MOS transistors according to the present invention.

FIG. **33** is a chart for showing energy loss of alpha particle.

FIG. **34** is a chart for explaining the dependency characteristic of the density of electron-hole pairs which are excited by alpha particle upon the distance of entry of this alpha particle.

FIG. **35** is a diagrammatic sectional view, showing the structure of a d-RAM cell according to a further embodiment of the present invention.

FIG. **36** is a chart for explaining the dependency characteristic of the density of electron-hole pairs which are excited by alpha particle up to a depth of 1

μm from surface, upon the initial energy of this alpha particle.

FIG. 37 is a diagrammatic sectional view, showing the structure of d-RAM cell according to another embodiment of the present invention.

FIGS. 38 and 39 are circuit diagrams of d-RAM cell according to the present invention.

DETAILED DESCRIPTION OF THE PREFERRED EMBODIMENTS

Description will hereunder be made of some preferred embodiments of the semiconductor device according to the present invention. It should be understood that, in these embodiments, the gate electrode in an n-channel MOS-FET is formed with a polysilicon of a high impurity concentration and having a conductivity type opposite to that of the source region, i.e. with a p^+ type polysilicon, instead of n^+ type polysilicon as in known such devices. The potential profile within the p type substrate at a location just below the gate oxide film in case the gate electrode is constructed with a p^+ type polysilicon is shown in FIG. 11. Zero potential (0) in this Figure indicates the potential of the source region. V_{bi}, represents the built-in potential at the junction of the source region and the p^+ type polysilicon region, and it is about 1.0 to 1.1 V at room temperature. In case the impurity concentration of the p type substrate is about 1×10^{15} cm^{-3}, the value of V_{bi}, $-V_{bi}$ will be about 0.25 V. In case the gate region is formed with a p^+ type polysilicon, the curve (1) represents the potential profile when the thickness T_{ox} of the gate oxide film is extremely small. As this T_{ox} increases, the curve will assume the pattern as indicated by (2). That is, the smaller the thickness T_{ox}, is the higher will become the potential at the interface between the oxide film and the p type substrate, so that electrons are allowed to flow with lesser degree of easiness. For an instance where the gate oxide thickness T_{ox} is substantially large, the potential profile is illustrated by the dashed line. By using the sample shown in FIG. 3, i.e. the channel-doped device having a T_{ox} of 1000 Å and a p type substrate resistivity ρ_{sub} of 7 Ω.cm, and by forming the gate region with a p type polysilicon, the memory holding time of this device is measured under the same conditions as for the samples shown in FIGS. 3 to 5, and the resulting memory holding time characteristic is shown by the curve (1) in FIG. 12. The device has a channel length L at mask level of 1 μm (effective channel length being 0.5 μm). In the case of the sample shown in FIG. 3, the memory holding time is very short. In FIG. 12, however, there can be obtained a memory holding time of about 6 and 100 seconds by setting V_{sub} at 0 V and −4 V. Just for reference sake, the memory holding time in a device having a conventional n^+ type polysilicon gate region is measured under the same conditions as mentioned above, is 6 μsec and 6 msec at $V_{sub}=0$ V and −4 V. The trend of improvement in the memory holding time resulting from the employment of a p^+ type polysilicon gate region in the n-channel device becomes more prominent as the thickness T_{ox} is made smaller. The curve (2) in FIG. 12 represents the result obtained in case the gate electrode is made with platinum (Pt). It should be noted here that a sufficient improvement in the memory holding time is effected also by forming the p^+ type gate region with platinum. In addition to the instance where platinum is used, almost similar results can be obtained also from the use of molybdenum (Mo) and tungsten (W) which have a certain high Schottky potential barrier and remain stable even for high temperature process. It should be understood that, in attempts for shorter channel lengths, there .will arise the tendency that the gate resistance becomes higher, so that the construction of the gate with a metal has sufficient significance. It should be understood also that similar good results can be obtained from metal silicide such as molybdenum silicide, ($MoSi_2$), tungsten silicide (WSi_2) , titanium silicide ($TiSi_2$), tantalum silicide ($TaSi_2$) , platinum silicide (PtSi) , etc. These materials have a certain high Schottky barrier height for the source region (bit line region), i.e. n^+ region in this case.

A sectional view of the structure of an n-channel d-RAM cell having a p^+ type polysilicon gate region according to the present invention is shown in FIG. 13. Like parts as in FIG. 1 are given like reference numerals and symbols, and their explanation is omitted. Numeral **14a** represents a gate electrode made of p^+ type polysilicon, **13a** an n^+ type polysilicon, **31** a thin oxide film, and **32** a metal electrode such as aluminum. In this instant structure, a storage capacitor C_s is formed by **13a**, **31** and **32**. In the embodiment of FIG. 13, the gate electrode **14a** is formed only by a p^+ type polysilicon. It should be understood, however, that in such instances where attempts are made for smaller channel lengths and for higher packing density, bringing about an excessively high resistance of the word line and disturbance in operation, it is effective to provide a p^+ type polysilicon layer on the gate oxide film **15** and also a platinum layer on top of this p^+ type polysilicon layer to thereby lower the resistance of the word line. In place of platinum layer, molybdenum or tungsten or metal silicide layer may be provided. It is also useful to provide multilayers of such metals as platinum, molybdenum and tungsten. Or, alternatively, there may be provided nothing else but only metal layers such as Mo, W and Pt, without the use of p^+ type polysilicon. In any way, there may be used metals, provided that they have a high melting point and that they will not be damaged during subsequent processes conducted at high temperature.

The data shown in FIG. 12 represent what have been measured with respect to the arrangement shown in FIG. 2 where a terminal of the storage capacitor C_s, i.e. the aluminum electrode **32**, is grounded. In other words, these are data with respect to the depletion storing mode operation where the shortage of amount of electrons is memorized. In contrast thereto, it is natural that the d-RAM cell shown in FIG. 13 is intended for accumulation storing mode operation which is ordinarily practiced by the application of a positive voltage V_{ss} to the aluminum electrode **32**, i.e. this d-RAM cell is operated so as to accumulate excessive electrons in the n^+ type drain region **13**. It should be noted here that the accumulation storing mode operation has such disadvantage that the memory holding time becomes shortened when subjected to a high temperature, as compared with the depletion storing mode operation.

In the n-channel MOS transistor having a p^+ type polysilicon gate region according to the present invention, the potential barrier which is produced at the interface between the gate oxide film **15** and the p type substrate **11** is higher than that produced in the conventional n-channel MOS transistor having an n^+ type polysilicon gate region. As the smaller channel length is intended, the depths x_j of the n^+ type source region **12** and the n^+ type drain region **13** are also made accordingly smaller. In such instance also, a sub-threshold

current tends to flow not only in the vicinity of the interface of junction, but also across the source region and the drain region due to internal bulk conduction, thus degradating the memory holding characteristic. In order to suppress such flow of sub-threshold current, it is effective to provide a p+ type buried region in the interior portion of the semiconductor body. For example, a p+ type region is buried, along the channel, in that part of the substrate at a location deeper than the depths of the n+ type regions **12** and **13**. Accordingly, the potential barrier in the bulk region of the substrate has a greater height, so that the sub-threshold current is reduced further. Such arrangement of device is shown in FIG. **14**. The embodiment of FIG. **14** shows the instance where the p+ type buried region **33** reaches as far as that portion of the p type substrate **11** located below the n+ type drain region **13**. That portion of this p+ type buried region **33** located below the n+ type drain region **13** may have an impurity concentration identical with that of the portion of the buried region **33** located along the channel region, or the portion of the buried region **33** located along the channel region may have a higher impurity concentration than that of the remaining portions thereof, such as channel region. Alternatively, the p+ type buried region **33** may be provided only in that site located along the channel region as shown in FIG. **15**. The n+ type source region **12** desirably is separated apart from the p+ type buried region **33**, in order not to make the capacity of the bit line large. It is needless to say that the p+ type buried region **33** may extend as far as that portion of the p type substrate **11** located below the n+ type source region **12**, as shown in FIG. **16**. In this embodiment, the bit line capacitance is liable to become large. In order to decrease the bit line capacitance, the n+ type source region **12** is formed to be sufficiently shallow so that this n+ type source region **12** is separated sufficiently away from the p+ type buried region **33** as shown in FIG. **17**. This p+ type region need only to have such impurity concentration as will not develop breakdown when write-in voltage is accumulated. Thus, the impurity concentration of the p+ type region is set at the order of 10^{17} cm^{-3}.

Similar effect can be brought about by the arrangement shown in FIG. **18** wherein the substrate **11** is formed with p+ type, and a p type layer **11b** is formed on top of this p+ type substrate **11**. It is needless to say that the n+ type drain region **13** is in direct contact with the p+ type substrate **11**. What requires to be taken care of is to arrange so as to avoid the occurrence of flow of current due to the breakdown of either the n+ type drain region and the p+ type substrate **11** or the n+ type source region **12** and the p+ type substrate **11**, caused by the application of a write-in voltage. Also, a consideration about a substrate bias voltage is required. In this instant case also, like the instances shown in FIGS. **14** to **17**, it is desirable to arrange the n+ type source region **12** so as to be directly adjacent the p+ type substrate **11**, where the bit line capacitance tends to increase.

Next, description will be made of the turn-off state of the MOS transistor as shown in FIGS. **14** to **18**. In order to facilitate the analysis, the MOS transistor which is to be explained here is approximated to a rectangular structure as shown in FIG. **19**. On top of a thin SiO_2 gate oxide film **51** is provided a p+ type polysilicon gate region **52**, and at both lateral ends are provided an n+ type source region **53** and an n+ type drain region **54**. The p+ type region located at the bottom in this Figure corresponds to the buried region. The distance between the source region and the drain region is designated as L, the channel depth from the gate oxide film **51** to the p+ type buried region **55** as D, and the impurity concentration of the channel region **56** as N_A. The potential within the channel region **56** will be sought, under the condition that the potential of the n+ type source region **53** is assumed to be 0 V, and that a potential V_G-V_{bi} is applied to the p type gate region **52**, and that a potential $V_{sub}-V_{bi}$ is applied to the p+ type buried region **55** and also that a potential V_D is applied to the n+ type drain region **54**. For the purpose of simplicity, let us assume that the oxide film **51** has a sufficiently small thickness, and that the channel region **56** is completely depleted. The potential profile $\phi(x, y)$ in the effective channel region **56** is derived under the above-mentioned boundary conditions as shown in FIG. **20**, as follows:

$$\phi(x_n, y_n) = \frac{4V_D}{\pi}\sum_{n=0}^{\infty}\frac{\sinh\{(2n+1)\pi L_n x_n\}\cdot\sin\{(2n+1)\pi y_n\}}{(2n+1)\sinh\{(2n+1)\pi L_n\}} + \tag{10}$$

$$\frac{4(V_{sub}-V_{bi})}{\pi}\sum_{n=0}^{\infty}\frac{\sinh\left\{\frac{(2n+1)\pi(1-y_n)}{L_n}\right\}\cdot\sin\{(2n+1)\pi x_n\}}{(2n+1)\sinh\left\{\frac{(2n+1)\pi}{L_n}\right\}} -$$

$$\frac{4V_{bi}}{\pi}\sum_{n=0}^{\infty}\frac{\sinh\left\{\frac{(2n+1)\pi y_n}{L_n}\right\}\cdot\sin\{(2n+1)\pi y_n\}}{(2n+1)\sinh\left\{\frac{(2n+1)\pi}{L_n}\right\}} -$$

$$\frac{16N_A qL^2}{\epsilon\pi^4}\sum_{n,m=0}^{\infty}\frac{\sin\{(2m+1)\pi x_n\}\cdot\sin\{(2n+1)\pi y_n\}}{\{(2m+1)^2+L_n^2(2n+1)^2\}(2m+1)(2n+1)},$$

Wherein:

$$L_N = \frac{L}{D},\ x_n = \frac{x}{L},\ y_n = \frac{y}{D}, \tag{11}$$

From the formula (10), it is possible to easily obtain the potential profile within the channel region. For simplicity's sake, it is assumed that $V_{bi}=1$ V.

In FIG. **21** is shown the dependency characteristic of the height $\Delta\phi_m$ of the potential barrier produced within the channel region upon the normalized channel length L_n. The parameter therefor is the drain voltage V_D. The

gate voltage V_G is set at 0 V, and the substrate bias voltage V_{sub} is set at −4 V. The drain voltage V_D corresponds to the voltage V_m which is stored in the storage region. In FIG. **21**, the value of the normalized channel length L_n for providing a same potential barrier height $\Delta\phi_m$ is noted to increase with an increase in the value of V_D.

In FIG. **22** is shown the relationship between $\Delta\phi_m$ and L_n, with the substrate bias voltage V_{sub} serving as the parameter. This Figure shows the data in case $V_G=0$ V, and $V_D=3$ V. As a matter of course, as the substrate bias voltage V_{sub} becomes smaller, the value of L_n for giving a same value of $\Delta\phi_m$ becomes greater. The process in which the normalized channel length L_n for imparting a same potential barrier height $\Delta\phi_m$ increases with an increase in the drain voltage V_D is shown in FIG. **23**. The value of L_n for giving $\Delta\phi_m=0.7$ V is about 0.96 when, for example, $V_D=2$ V, and it is 1.05 at $V_D=3$ V, and it is 1.14 at $V_D=5$ V.

In FIG. **24** is shown the relationship between L_n and V_{sub} for the respective values of $\Delta\phi_m$ when $V_D=3$ V. Needless to say, L_n for giving a same $\Delta\phi_m$ becomes smaller with an increase in V_{sub}. In the instant structure, it is possible to give $\Delta\phi_m=0.7$ V at $L_n=1.8$ even at $V_{sub}=0$ V, i.e. even in the state in which no bias voltage is applied to the substrate.

If the potential barrier height $\Delta\phi_m$ is about 0.7 V, the memory holding time of the device serving as a d-RAM is sufficiently long, for example, longer than 1 sec at the temperature of 80° C. Therefore, the above-mentioned result of observation indicates that a value of about 0.9~2.0 of L_n provides a sufficient memory holding time length. In case the channel depth D is set at 0.1 μm, the device will operate well as a dynamic RAM even when the effective channel length is in the range of 0.09 μm to 0.2 μm.

In FIG. **25** is shown the relationship between the drain current I_d and the drain voltage V_D in case the channel width W is set at 100 μm. In the Figure, one-dot-chain line indicates the experimental value of sample I ($L_{eff}=0.5$ μm). It will be noted clearly in FIG. **25** that by increasing L_n to 0.9, 1.0, 1.1, 1.2 and 1.3, the drain current (sub-threshold current) decreases progressively accordingly.

Discussions have been made under the assumption that the impurity concentration N_A of the channel region is held constant for the foregoing embodiments. However, the effect of the impurity concentration N_A of the channel region upon the potential barrier height $\Delta\phi_m$ is shown in FIG. **26**. In this Figure, there are shown two kinds of instances. As is well known, in case the impurity concentration N_A of the channel region is increased, the height of the potential barrier $\Delta\phi_m$ will increase. However, $\Delta\phi_m$ is kept substantially constant for values of N_A below a certain level. The maximum value of N_A below which $\Delta\phi_m$ assumes a substantially constant value will augment with shorter lengths of the channel region. Thus, so long as a required value of $\Delta\phi_m$ is guaranteed, N_A is desired to have as small a value as possible. This is because of the fact that a small value of N_A brings about a reduction of space charge resistance, and the profile of electric field within the channel region is uniformalized, so that the intensity of electric field decreases, resulting in a reduction of hot electron effect.

Based on the above-stated consideration, the effective channel length of those d-RAM cells having the structures shown in FIGS. **14** to **18** can be shortened up to about 0.1 μm. In case the effective channel length is shortened up to this level, the hot electron effect which acts to shift threshold voltage in a short-channel MOS transistor becomes extremely small. This is because the time required for the electrons to flow through the channel becomes shorter, so that these electrons will reach the electrode region prior to being converted to hot electrons.

In case a p^+ type buried region **33** is provided within the channel region along therewith as shown in FIGS. **14** to **18**, the response of the potential profile within the channel to the varying word line voltage becomes quick, and accordingly the operation speed of the device improves. This, of course, is required to be accompanied by the consideration not to increase the bit line capacitance.

A concept completely the same with that discussed above can be applied to a double-layer polysilicon d-RAM cell wherein the n^+ type region **13** is formed with an inversion layer. Such example is shown in FIG. **27**. In this Figure, reference numeral **41** represents a p type substrate. An n^+ type region **42** constitutes a bit line region. Numeral **43** represents a low resistivity polysilicon layer, **44** a p^+ type polysilicon gate region, **45** a gate oxide film, **46** a field oxide film, **47** an oxide film, and **48** a p^+ type channel stopper region. A storage capacitor C_s is formed by **43**, **45** and **41**. Numeral **41*a*** represents a substrate electrode. A signal is stored on the basis of the amount of electrons which are stored within the depletion layer which, in turn, is induced below the low resistivity polysilicon layer **43**, and this layer may be called an inversion layer. However, this region will be called the drain region herein for the sake of simplicity.

In a same manner and conception for the embodiments shown in FIGS. **14** to **18**, it is also effective to provide a p^+ type buried region or a p^+ type substrate. For example, in FIG. **28** there is provided a p^+ type region **49** It is needless to say that the p^+ type buried region **49** may extent as far as that portion of the p type substrate **41** located below the n^+ type source (bit line) region **42**, as shown in FIG. **29**.

It is in the d-RAM cell structure that the suppression of what is called leak current flowing across the source region and the drain region is required most severely at the zero gate bias state of the device. For this reason, description of an application of the MOS transistor according to the present invention has hereinabove been directed solely to d-RAM cell. In these preceding Figures, there have been shown only a single cell structure. In practice, however, such cell is provided at respective crossing points of a matrix which is formed by bit lines and word lines, wherein word lines are connected to a decoder and bit lines are connected to a sense amplifier.

A short channel MOS transistor structure serves to increase transconductance, and to accelerate high-speed operation in logic circuit also. The effect of leak current at turn-off time of semiconductor devices employed in the formation of logic circuitry is not so great as in d-RAM cell. However, in case leak current becomes excessively large, this will give rise to the tendency that clear differentiation between high level and low level of an output becomes difficult to be acquired. Accordingly, in a logic circuit using such MOS transistor wherein the effective channel length, is set smaller than about 1 μm, it is desirable to construct a gate region having a conductivity type same as that of the channel

region, even though there may be some complexity in the fabrication process. Such gate can needless to say be made with a metal having a high melting point or a metal silicide.

Some logic circuits embodying the above-stated principle are shown in FIGS. **30**, **31** and **32**.

FIG. **30** illustrates the circuit diagram of an inverter arrangement in which a load transistor is comprised of a MOS transistor T_3 having its gate electrode directly coupled to its source electrode. Symbol T_2 represents a MOS transistor embodying the present invention. Since the turn-off of this MOS transistor T_2 can be performed sufficiently well owing to the practically suppressed leak current, the high level output is almost perfectly close to the voltage V_{DD} of power supply. It should be understood that the load transistor T_3 may be formed with the MOS transistor of the present invention.

FIG. **31** shows another inverter arrangement in which a constant potential V_{GG} is applied to the gate electrode of a MOS transistor T_5. Depending on the requirement of design, the constant potential V_{GG} may be directly coupled to the drain electrode of the MOS transistor T_5. Symbol T_4 represents a MOS transistor of the present invention. It should be understood here again that the transistor T_5 may be formed with the MOS transistor of the present invention.

FIG. **32** illustrates a circuit diagram of a complementary inverter. Symbols T_6 and T_7 represent MOS transistors of the present invention. This CMOS arrangement may be termed an ideal circuit arrangement such that a current is allowed to flow only during the switching operation, and that no current is allowed to flow during non-switching period. Besides, the MOS transistor of the present invention which has been described above is such that leak current is suppressed to a very small level. Thus, the strong point of a CMOS arrangement can be displayed prominently even in short-channel semiconductor devices and also in high packing density integrated circuits. Furthermore, a short-channel semiconductor device leads to a reduced gate capacitance, and also to a quick response of the channel potential to the gate voltages applied. Therefore, the switching speed of the device is greatly improved, and thus the advantage of a CMOS arrangement can be displayed all the more conspicuously. As described, the CMOS arrangement using the MOS transistor of the present invention is extremely excellent in its high-speed operation and low power dissipation characteristics. Based on the above-described arrangements shown in FIGS. **30**, **31** and **32**, there can be easily constructed multi-input NOR gate and NAND gate, and furthermore static RAM can be easily formed.

It should be understood here that the MOS transistor embodying the present invention is not limited to those arrangements described hereinabove. The respective conductivity types of the constituting semiconductor regions may be reversed. In short, it is only necessary to arrange that a highly-doped region having a conductivity type opposite to that of the source region is provided, as at least part of the gate electrode, so as to be in direct contact with the gate insulating layer or film. In case it is intended to further improve the performance, it is only necessary to provide a highly-doped region within the substrate so as to extend along the channel region. It should be noted also that in case the depth from the surface of the substrate up to the p+ buried region **33** (FIG. **14**) is designated as D and in case the effective channel length is designated as L_{eff}, the device will operate sufficiently well as d-RAM even where this L_{eff} is nearly in the order of about D to 1.2 D, though depending on the substrate bias voltage applied. More particularly, in case said depth D is 0.15 μm, L_{eff} will be 0.15 to 0.18 μm.

The MOS transistor which has been described above is such that even in a short-channel structure having an effective channel length L_{eff} of 1 μm or less, the leak current can be suppressed to a sufficiently small value. Thus, its effect or advantage is displayed very prominently especially when a d-RAM is constructed by such MOS transistor. Even when the effective channel length L_{eff} is set at 0.1 to 0.5 μm, a sufficient holding of memory contents can be materialized.

Now, generally speaking, in case the channel length is reduced in a MOS transistor and when, thus, the storage capacitance is reduced as discussed previously, there arises the problem that those carriers which have been created by irradiation of alpha-particle will flow into the storage region which has been rendered to a floating state, to thereby extinguish the stored electric charge or the contents of memory. In FIG. **33** are shown the energy loss characteristics of alpha-particle irradiated into a silicon semiconductor body. The vertical axis represents a loss rate of energy ϵ of alpha-particle relative to the distance x in the direction of entry of alpha-particle. The horizontal axis represents the energy of alpha-particle. In case energy ϵ of the alpha-particle is small, this alpha-particle will lose its energy mostly due to its collision with nuclei. In case the energy ϵ is great, the alpha-particle will lose its energy mostly when it collides with electrons. In case an alpha-particle is irradiated into silicon, ϵ_3 will have a value of about 360 keV.

The process of loss of energy of alpha-particle due to its collision with electrons may be said to be proportional substantially to $1/\epsilon$ in a region where energy ϵ is greater than ϵ_3, and to be proportional substantially to $\sqrt{\epsilon}$ in a region where e is smaller than ϵ_3, as:

$$-\frac{d\epsilon}{dx} = \frac{A}{\epsilon} : \epsilon > \epsilon_3, \text{ and} \tag{12}$$

$$-\frac{d\epsilon}{dx} = K\sqrt{\epsilon} : \epsilon < \epsilon_3, \tag{13}$$

wherein: A and K are constants. The depth or range R of entry into silicon of alpha-particle having an initial energy ϵ_{in} at the time of irradiation is given by:

$$R = \frac{1}{2A}(\epsilon_{in}^2 + 3\epsilon_3^3). \tag{14}$$

The density of electron-hole pairs n(x) excited by alpha-particle along its track of entry is given by:

$$n(x) = \frac{1}{\epsilon_g}\left(-\frac{d\epsilon}{dx}\right), \tag{15}$$

wherein: ϵ_g represents an energy required for creating electron-hole pairs.

From Formulas (12), (13) and (15), are yielded the following:

$$n(x) = \frac{A}{\epsilon_g \sqrt{\epsilon_{in}^2 - 2Ax}} : x \leqq x_3 \text{ and} \quad (16)$$

$$n(x) = \frac{1}{4\epsilon_3^3 \epsilon_g} (\epsilon_{in}^2 + 3\epsilon_3^2 - 2Ax) : R \geqq x > x_3, \quad (17)$$

wherein: x_3 represents the distance at which the energy of alpha-particle becomes ϵ_3. In silicon, $A=5.1\times10^5$ $(keV)^2/\mu m$ and $\epsilon_g=3.6$ eV. Supposing that ϵ_{in} is 5 MeV the depth of entry of alpha-particle will be 25 μm. Accordingly, alpha-particle which is irradiated with an energy of about 5 MeV will not make many electron-hole pairs at the surface of silicon semiconductor substrate, and will create a greater number of electron-hole pairs when alpha-particle has lost 90% or more of its energy. An alpha-particle is considered, in ordinary cases, to enter into silicon, by initial energy, to a depth of about 10 to 30 μm. As such, the alpha-particle will create a greater number of electron-hole pairs at a depth of entry just before it reaches the depth of 10 to 30 μm.

FIG. **34** shows variation of the energy ϵ of alpha-particle having an initial energy of 5 MeV, relative to the distance of its entry into silicon when irradiated thereinto, and also the density of electron-hole pairs created thereby.

FIG. **35** shows an example of a section of a MOS d-RAM cell which is designed so that the flow, into the storage region, of electrons or holes which are created by irradiation of alpha-particle is inhibited and that accordingly the stored electric charge is not cancelled out. In this Figure, like parts in FIG. **14** are indicated by like reference numerals and symbols. A p^+ type buried region **33***a* is a region of high impurity concentration which is provided along the channel region. Numeral **11***a* represents a substrate electrode. This electrode **11***a* need not be provided on the entire rear-side surface of the substrate **11**. Also, in a short-channel transistor, an n^+ type region **12** and an n^+ type region **13** have a depth of about 0.05 to 0.5 μm. These two regions are provided shallower as the channel length becomes shorter. The p^+ type buried region **33***a* is illustrated here so that it is directly adjacent the n^+ type region **13** which is to serve as the storage region. It should be noted, however, that said buried region **33***a* need not be in direct adjacent this storage region **13**. The directly adjacent arrangement leads to a larger storage capacitance. In case the p^+ type buried region **33***a* is located to be in direct adjacent the storage region **13** as illustrated here, it is desirable to arrange the impurity concentration of that portion of this p^+ type buried region **33***a* which is directly adjacent the n^+ type storage region **13** so as to be about 3×10^{17} cm^{-3} or lower. Such selection of the impurity concentration of said portion is intended to suppress the occurrence of the phenomenon that the region located between the n^+ type region **13** and the p^+ type buried region **33***a* is rendered to breakdown state by the reverse bias condition during operation and that, accordingly, a current is allowed to flow thereacross. In the case of silicon, the breakdown voltage at the junction of n^+p^+ is about 12 V in case the p^+ type region has an impurity concentration of 1×10^{17} cm^{-3}. If the write-in voltage V_w is 5 V and the substrate reverse bias voltage V_{sub} is -5 V, the breakdown voltage has to be set at least 10 V. It should be understood that the impurity concentration of that portion of the p^+ type buried region **33***a* located so as to be in contact with the channel region may be identical with the impurity concentration of that portion which is located directly adjacent the n^+ type region **13**, or it may be higher than that. Even where the impurity concentration of the p^+ type region **33***a* is substantially uniform as portions of this region go progressively toward the p type substrate **11**, there is being produced, between the p^+ type buried region **33***a* and the p type substrate **11**, a drift electric field due to slight difference in the degree of impurity concentration. That is, those holes located in the p^+ type buried region **33***a* diffuse toward the p type substrate **11** side. Whereby, there is induced, between the p^+ type buried region **33***a* and the p type substrate **11** which may have an impurity concentration of, for example 2×10^{15} cm^{-3} or less, an electric field extending from the p type substrate **11** toward the p^+ type buried region **33***a*. Those electrons which are created by alpha-particle in the p type substrate **11** are transferred back to the p type substrate **11** side by this electric field, and thus they cannot enter into the p^+ type buried region **33***a*. Therefore, these electrons, after all, will not reach the n^+ type region **13**. On the other hand, those holes which have been produced will flow into the p type substrate **11**.

In order to increase the diffusion electric field or diffusion potential which is induced between the p^+ type buried region **33***a* and the p type substrate **11**, it is only necessary to lower the impurity concentration of the p type semiconductor substrate **11**. For example, this impurity concentration is set at about 10^{14} to 10^{15} cm^{-3}. It is needless to say that the level of this impurity concentration may be lower than the above-mentioned range.

However, with the device structure as described just above and shown in FIG. **35**, those electrons, among the electrons which have been created by alpha-particle in the p^+ type buried region **33***a*, which are located in the upper half portion of the p^+ type buried region **33***a* located closer to the n^+ type region **13**, will diffuse toward that side which is contiguous with the n^+ type region **13**. This diffusion of electrons will be accelerated by a reverse bias electric field applied between the two regions **33***a* and **13**, so that the electrons will flow into the n^+ type region **13** and will constitute a cause of extinction of memory. In order to prevent such flow of electrons, it is only necessary to form an impurity concentration gradient in the p^+ type buried region **33***a* in the direction toward the p type substrate **11**. For example, the impurity concentration of that portion of the p^+ type buried region **33***a* located adjacent the channel region and the n^+ type region **13** is set at about 1×10^{17} cm^{-3}, with progressively lowered concentration as the portions of the buried region **33***a* go progressively toward the p type substrate **11**, in such manner that the impurity concentration of lowermost portion of the buried region is less than at least one third of that of the highest impurity concentration. Usually, the impurity concentration of the p type substrate **11** is about 10^{15} cm^{-3}. However, it is also effective to arrange this impurity concentration of the semiconductor substrate **11** at a low level such as about 1×10^{15} cm^{-3} or about 1×10^{14} cm^{-3}, and also to arrange the impurity concentration of the channel region at a desired higher level by channel doping using ion-implantation technique. The p^+ buried region, usually, is fabricated by ion-implantation.

With the device structure stated above which has an impurity concentration gradient in the p^+ type buried region **33a** to be progressively decreasing toward the p type substrate **11**, those electrons, among the electrons created by irradiation of alpha-particle, which contribute to the extinction of memory, are only those electrons excited in the narrow region located between the p^+ type buried region **33a** and the surface of the semiconductor substrate. It should be understood here that in case L_{eff} which is determined by the distance between the source region and the drain region is 1 μm or less, the depths of the n^+ type regions **12** and **13** are about 0.3 μm or less. Also, the width of the depletion layer which grows when a reverse voltage is applied across the n^+ type region **13** and the p^+ type buried region **33a** is about 0.3 to 0.5 μm. Accordingly, the depth of the semiconductor region which contributes to extinction of memory is no greater than just about 0.8 μm. On the other hand, the alpha-particle having an energy of several MeV will enter for a distance of about 15 to 25 μm into, for example, silicon. As shown in FIG. **33**, when the alpha-particle gains an energy ϵ_3 of about 360 keV, it creates electron-hole pairs with highest probability. In case the alpha-particle gains an energy higher than that, the probability of generation of electron-hole pairs drops sharply. Accordingly, it will be understood that the alpha-particle immediately after irradiation to the surface of a semiconductor body has an energy of several MeV, for example about 5 MeV, and that, accordingly, the probability of creation of electron-hole pairs is extremely low near the surface. The alpha-particle will begin to create electron-hole pairs after it has entered into the semiconductor substrate to a certain distance. The number of electron-hole pairs which are created in that portion of semiconductor region up to a depth of about 0.8 μm from the surface of the semiconductor body is about 1/50 or less of the total number (which is of the order of 10^6) of those electron-hole pairs which are created in the semiconductor body by a single alpha-particle, where alpha-particle is irradiated in a vertical direction. In other words, several ten thousand electrons will flow into the n^+ type region **13**. In case the storage capacitance $C_s=0.12$ pF and the stored voltage $V_m=5$ V, the number of those electrons which are stored in the n^+ type region **13** or which are in short of electrons is about 3×10^6. Thus, the amount of those electrons which flow there into by the irradiation of a single alpha-particle will be smaller by two orders of magnitude than the abovesaid number. Thus, the memory cell embodying the structure of the present invention will not exhibit soft errors due to alpha-particle even where the cell area is reduced by about another one order of magnitude.

Description has been made in the above of instances where alpha-particle is irradiated normally or vertically onto the surface of silicon substrate. However, in case alpha-particle is irradiated with an inclination thereonto, the situation will become different. For example, in case an alpha-particle having an initial energy of 5 MeV impinges onto the surface of a silicon semiconductor body at an angle of incidence of 30°, this alpha-particle will enter into silicon up to a depth of 25 μm. However, the depth measured from the topmost surface of the device is 12.5 μm. Also, as the initial energy of alpha-particle attenuates, the site at which electron-hole pairs are created in a large number will shift toward and closer to the surface of the device. Based on the foregoing considerations, there is shown in FIG. **36**, as the function of the initial energy ϵ_{in}, the total number of electron-hole pairs which are created in that portion of the semiconductor body from the surface of the device up to a depth of 1 μm, which depth substantially influencing the memory-storing action of the memory cell. As a matter of course, as the value of ϵ_{in} becomes smaller, the total number of the electron-hole pairs created at a depth within 1 μm by alpha-particle will become larger. Also, as the angle of incidence θ of alpha-particle becomes smaller, the total number will increase. Usually, the angle of incidence of alpha-particle irradiated from a package is considered to be 30° or greater, and the minimum energy of alpha-particle is about 1 MeV. The number of electron-hole pairs, when $\theta=30°$ and when $\epsilon_{in}=1$ MeV, is about 1.5×10^5. When the storage capacitance $C_s=0.1$ pF and when the stored voltage $V_m=3$ V, the stored electric charge $Q=C_s\cdot V_m=3\times10^{-13}$ C. The number of corresponding electrons is 1.9×10^6. That is, the amount of electrons created which adversely affect the memory action is no greater than only 10% of the stored electric charge, and thus it can be disregarded.

In FIG. **35**, the p^+ type buried region **33a** is not provided below the n^+ type region **12** side which serves as the bit line. This p type buried region **33a** may be provided so as to extend up to below the n^+ type region **12** as in the instance of FIG. **16**. By so arranging, it is possible to eliminate the adverse effect caused by those electrons excited by alpha-particle in the bit line at the time of read-out operation. Such arrangement, however, has the disadvantage that the bit line capacitance becomes increased. Therefore, in such case, it is effective to form the n^+ type region **12** shallow so as to position this region apart from the p^+ type buried region **33a**.

Now, FIG. **37** shows a sectional structure of a memory cell according to the present invention wherein a region corresponding to the n^+ type region **13** shown in FIG. **35** is formed by an inversion layer. Like parts in FIG. **28** are indicated by like reference numerals and symbols, and their explanation is omitted. The p^+ type buried region **49** in FIG. **37** is provided with an impurity concentration gradient toward the p type semiconductor substrate **41** in the same manner as that of the embodiment shown in FIG. **35**. However, unlike the p^+ type buried region **33a** shown in FIG. **35**, there is almost no need to consider reverse bias voltage of the p^+ type buried region **49**. Therefore, there is no need to limit the impurity concentration of that portion of this region located close to the surface thereof to about 1×10^{17} cm^{-3}. The impurity concentration of that portion may be higher than the above-mentioned level.

In the embodiment shown in FIG. **35**, there is provided an n^+ type region **13**. Therefore, the abovesaid embodiment is able to perform not only the electron-depletion storing mode operation as shown in FIG. **38**, but also the electron-accumulation storing mode operation as shown in FIG. **39**. It should be noted, however, that with the structure shown in FIG. **37**, it is only possible to operate the electron-accumulation storing mode operation as shown in FIG. **39**.

In FIGS. **38** and **39**, numeral **61** represents a word line, and **64** a bit line. In the embodiment of FIG. **38**, a terminal of the storage capacitor **64** is grounded. In the embodiment of FIG. **39**, however, this terminal is connected to a positive power supply V_{DD}**65**. In the embodiment of FIG. **38**, a write-in voltage V_w (in case of an n-channel MOS transistor, it is a positive voltage) is

applied to the bit line **64**, and a voltage is applied to the word line **63**, and thus the MOS transistor **62** is rendered conductive to thereby allow electrons to flow out from the n+ type region **13** which serves as the storage region, to cause this n+ type region **13** to be positively charged up. Thereafter, the voltage on the word line **64** is removed to effect a memorizing operation. In such instance, the n+ type region **13** becomes in short of electrons, and it is positively charged. Therefore, this region **13** is reversely biased relative to its surrounding p type region including the p+ type region. Thus, memory contents are retained well.

In the operating state of the device shown in FIG. **39**, a positive voltage V_{DD} is always applied to a terminal of the storage capacitor **61**. Accordingly, in the normal state, an excessive amount of electrons is stored in the n+ type region **13**. During the write-in operation, however, the number of the excessive electrons is reduced. In case the write-in voltage is equal to the power supply voltage V_{DD}, the excessive electrons in the n+ type region **13** will almost disappear upon application of the write-in voltage V_w.

It should be understood that the device structures according to the present invention are not limited to those shown in FIGS. **13** to **18**, **27**, **28**, **29**, **35** and **37**. Constitutional regions of devices may have reverse conductivity types. Although such structures will exhibit lower-speed operation, they can provide similar operation if the polarity of voltages applied is reversed accordingly.

Description has been made of those embodiments wherein the channel stopper region is separated away from the buried region. It should be understood, however, that these two regions may be arranged to be in contact with each other.

Embodiments of d-RAM cell due to the present invention have a storage capacitor which includes a thin insulator layer. In these embodiments, said thin insulator layer is comprised of an oxide layer. It should be understood, however, that this thin insulator layer consists of other insulator material such as silicon nitride (Si_3N_4) or tantalum oxide (Ta_2O_5). These materials have a dielectric constant larger than that of silicon dioxide (SiO_2), such as about 8 (Si_3N_4) and 22 (Si_3N_4), so that these materials are more suitable for increasing the storage capacitance.

Embodiments have been illustrated for those instances wherein components are provided on a flat surface of a semiconductor body. It is needless to say that the device may have either a V-MOS structure or a U-MOS structure.

Also, there have been shown memory cells. Such memory cells may be provided at respective cross points of a matrix formed by word lines and bit lines, and the word lines are coupled to a decoder, and the bit lines are connected to a sense amplifier, whereby a semi-conductor memory is provided.

Description has been made of devices using a silicon substrate. It should be understood, however, that the substrate may be made of GaAs. Similar functions can be obtained from devices having GaAs substrate.

The structures embodying the present invention can be fabricated by relying on known oxidation technique, CVD technique, diffusion technique, ion-implantation technique, evaporation-deposition technique, wiring technique, wet-dry etching technique and like techniques.

What is claimed is:

1. A semiconductor device formed with an insulation-gate transistor having a semiconductor substrate, and having, closer to a surface of said substrate, a source semiconductor region of one conductivity type and a low resistance and a channel semiconductor region of the opposite conductivity type and a high resistivity defined between said source region and a drain region, and having a gate electrode formed on a surface of said channel region via a gate insulator layer, wherein:

at least a portion of said gate electrode contacting said gate insulator layer is formed with a material which has a relatively high built-in voltage relative to said source region and which is selected from a group consisting of a metal, a metal silicide and a highly-doped polysilicon of a conductivity type opposite to that of said source region,

a deep semiconductor region (**33**) of said opposite conductivity type having an impurity concentration higher than that of the channel region and extending along at least a part of said effective channel length but being effectively separated from and located at a depth sufficiently lower than said source region so as to reduce junction capacitance between said deep region and said source region;

an effective channel length of less than 1 μm defined by the distance between said source and said drain regions,

said gate insulator layer being less than 500 Å, and

the relationship $L/D>0.9$, where L represents the effective channel length and D represents the depth from the surface of said semiconductor region.

2. A semiconductor device according to claim **1**, in which said metal is one selected from a group consisting of platinum, molybdem and tungsten.

3. A semiconductor device according to claim **1**, in which said metal silicide is selected from a group consisting of molybdenum silicide, tungsten silicide, titanium silicide, tantalum silicide and platinum silicide.

4. A semiconductor device according to claim **1**, in which said buried region extends to contact said drain region.

5. A semiconductor device according to claim **1**, in which said buried region extends close to said drain region.

6. A semiconductor device according to claim **1**, in which said buried region extends to both of said drain region and said source region.

7. A semiconductor device according to claim **1**, in which said semiconductor substrate has a high impurity concentration and has a conductivity type opposite to that of said source region,

said semiconductor device further includes, at a surface of said substrate, a region of a lesser impurity concentration that of said substrate and of a conductivity type same as that of said substrate, and

said source region, said drain region and said channel region are formed in said region of a lesser impurity concentration.

8. A semiconductor device according to claim **1**, in which said buried region has such an impurity concentration gradient that the degree of concentration is lower progressively toward the interior of said substrate from said surface thereof.

9. A semiconductor device according to claim **1** in which said insulation-gate transistor constitutes a memory cell of a dynamic random access memory.

10. A semiconductor device according to claim 9, in which the electrode is formed on the drain region via a thin insulator layer so that a storage capacitor is formed by this insulator layer, the drain region and the electrode.

11. A semiconductor device according to claim 9, in which a storage capacitor is formed in said drain region.

12. A semiconductor device according to claim 10, in which said source region serves as a bit line, and said gate electrode serves as a word line.

13. A semiconductor device according to claim 1, in which said insulation-gate transistor serves as one of transistors constituting a complementary inverter circuit.

14. A semiconductor device according to claim 11 in which said source region serves as a bit line and said gate electrode serves as a word line.

15. A dynamic random access memory comprising at least one insulated gate transistor and one storage capacitor, wherein:

said transistor comprises;

an insulated-gate transistor having a semiconductor substrate, and having, closer to a surface of said substrate, a source semiconductor region of one conductivity type and a low resistivity, a drain region having said one conductivity type and resistivity and a channel semiconductor region of the opposite conductivity type and a high resistivity defined between said source region and drain region, and having a gate electrode formed on a surface of said channel region via a gate insulator layer, characterized in that

(a) at least a portion of said gate electrode contacting said gate insulator layer is formed with a material which has a relatively high built-in voltage relative to said source region (12) and which is a metal, a metal silicide, or a highly-doped polysilicon of a conductivity type opposite to that of said source region;

(b) a deep semiconductor region (33) of said opposite conductivity type having an impurity concentration higher than that of the channel region and extending along at least a part of said effective channel length but being effectively separated from and located at a depth sufficiently lower than said source region so as to reduce junction capacitance between said deep region said source region;

(c) an effective channel length of less than 1 μm is defined by the distance between said source and said drain regions;

(d) said gate insulator layer is less than 500 Å,

(e) the relationship $L/D>0.9$, where L represents the effective channel length and D represents the depth from the surface to said semiconductor region.

16. A semiconductor device according to claim 15 characterized in that the electrode is formed on the drain region via a thin insulator layer so that a storage capacitor is formed by this insulator layer, the drain region and the electrode.

17. A dynamic random access memory comprising at least one insulated gate transistor and one storage capacitor, wherein:

said transistor comprises:

an insulated-gate transistor having a semiconductor substrate, and having, closer to a surface of said substrate, a source semiconductor region of one conductivity type and a low resistivity, a drain region formed with an inversion region and a channel semiconductor region of the opposite conductivity type and a high resistivity defined between said source region and drain region, and having a gate electrode formed on a surface of said channel region via a gate insulator layer, characterized in that

(a) at least a portion of said gate electrode contacting said gate insulator layer is formed with a material which has a relatively high built-in voltage relative to said source region and which is a metal, a metal silicide, or a highly-doped polysilicon of a conductivity type opposite to that of said source region;

(b) a deep semiconductor region (33) of said opposite conductivity type having an impurity concentration higher than that of the channel region and extending along at least a part of said effective channel length including beneath said drain region, but being effectively separated from and located at a depth sufficiently lower than said source region so as to reduce junction capacitance between said deep region and said source region;

(c) an effective channel length of less than 1 μm is defined by the distance between said source and said drain regions;

(d) said gate insulator layer is less than 500 Å, and

(e) the relationship $L/D>0.9$, where L represents the effective channel length and D represents the depth from the surface to said semiconductor region,

said one storage capacitor comprising an inversion region serving as a drain region and an insulator layer and an electrode formed above said inversion region.

18. A semiconductor device according to claim 17, in which said source region serves as a bit line, and said gate electrode serve as a word line.

19. A semiconductor device having a complementary inverter circuit comprising an n-channel insulated-gate transistor and a p-channel insulated-gate transistor connected in series to said n-channel insulated-gate transistor, gates of these transistors being directly connected to each other, wherein:

each of these transistors has a semiconductor substrate, and having, closer to a surface of said substrate, a source of semiconductor region of one conductivity type and a low resistivity, a drain region having said one conductivity type and a low resistivity and a channel semiconductor region of the opposite type and a high resistivity defined between said source region and drain region, and having a gate electrode formed on a surface of said channel region via a gate insulator layer, characterized in that

(a) at least a portion of said gate electrode contacting said gate insulator layer is formed with a material which has a relatively high built-in voltage relative to said source region and which is a metal, a metal silicide, or a highly-doped polysilicon of conductivity type opposite to that of said source region;

(b) a deep semiconductor region (33) of said opposite conductivity type having an impurity concentration higher than that of the channel region and extending along at least a part of said effective channel length but being effectively separated from and located at a depth sufficiently lower than said source region so as to reduce junction capacitance between said deep region and said source region;

(c) an effective channel length of less than 1 μm is defined by the distance between said source and said drain regions;

(d) said gate insulator layer is less than 500 Å, and

(e) the relationship $L/D>0.9$, where L represents the effective channel length and D represents the depth from the surface to said semiconductor region,

said one storage capacitor comprising an inversion region serving as a drain region and an insulator layer and an electrode formed above said inversion region.

* * * * *