US010510842B2

(12) **United States Patent**
Rao

(10) **Patent No.: US 10,510,842 B2**
(45) **Date of Patent: Dec. 17, 2019**

(54) **SEMICONDUCTOR DEVICES WITH GRADED DOPANT REGIONS**

(71) Applicant: **GREENTHREAD, LLC**, Dallas, TX (US)

(72) Inventor: **G.R. Mohan Rao**, Allen, TX (US)

(73) Assignee: **GREENTHREAD, LLC**, Dallas, TX (US)

(*) Notice: Subject to any disclaimer, the term of this patent is extended or adjusted under 35 U.S.C. 154(b) by 0 days.

(21) Appl. No.: **15/590,282**

(22) Filed: **May 9, 2017**

(65) **Prior Publication Data**

US 2017/0243876 A1 Aug. 24, 2017

Related U.S. Application Data

(60) Continuation of application No. 14/931,636, filed on Nov. 3, 2015, now Pat. No. 9,647,070, which is a continuation of application No. 14/515,584, filed on Oct. 16, 2014, now Pat. No. 9,190,502, which is a continuation of application No. 13/854,319, filed on

(Continued)

(51) **Int. Cl.**

H01L 21/02	(2006.01)
H01L 29/10	(2006.01)
H01L 27/11524	(2017.01)
H01L 27/146	(2006.01)
H01L 27/11521	(2017.01)
H01L 29/739	(2006.01)
H01L 29/36	(2006.01)

(Continued)

(52) **U.S. Cl.**

CPC ***H01L 29/1095*** (2013.01); ***H01L 27/11521*** (2013.01); ***H01L 27/11524*** (2013.01); ***H01L 27/14643*** (2013.01); ***H01L 29/36*** (2013.01); ***H01L 29/7395*** (2013.01); *H01L 27/0214* (2013.01); *H01L 27/10844* (2013.01)

(58) **Field of Classification Search**

CPC H01L 29/1095
USPC 257/655
See application file for complete search history.

(56) **References Cited**

U.S. PATENT DOCUMENTS

4,001,864 A 1/1977 Gibbons
4,160,985 A 7/1979 Kamins et al.
(Continued)

OTHER PUBLICATIONS

P.D. Moor, Advanced CMOS-based pixel sensors, https://indico.cem.ch/event/122027/contributions/88236/ attachments/69340/99377/FEEimecPdM.pdf, 2011, 41 pages.

(Continued)

Primary Examiner — Ajay Arora
(74) *Attorney, Agent, or Firm* — Bill R. Naifeh; Timothy F. Bliss

(57) **ABSTRACT**

Most semiconductor devices manufactured today, have uniform dopant concentration, either in the lateral or vertical device active (and isolation) regions. By grading the dopant concentration, the performance in various semiconductor devices can be significantly improved. Performance improvements can be obtained in application specific areas like increase in frequency of operation for digital logic, various power MOFSFET and IGBT ICs, improvement in refresh time for DRAMs, decrease in programming time for nonvolatile memory, better visual quality including pixel resolution and color sensitivity for imaging ICs, better sensitivity for varactors in tunable filters, higher drive capabilities for JFETs, and a host of other applications.

18 Claims, 10 Drawing Sheets

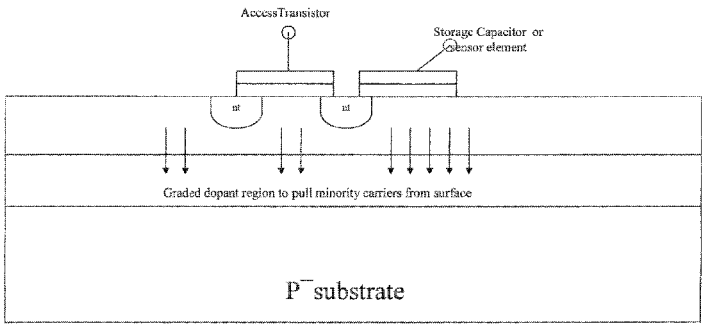

CMOS Substrate for a DRAM or image sensor, with one embodiment of the invention

Related U.S. Application Data

Apr. 1, 2013, now abandoned, which is a continuation of application No. 11/622,496, filed on Jan. 12, 2007, now Pat. No. 8,421,195, which is a division of application No. 10/934,915, filed on Sep. 3, 2004, now abandoned.

(51) **Int. Cl.**
H01L 27/02 (2006.01)
H01L 27/108 (2006.01)

(56) **References Cited**

U.S. PATENT DOCUMENTS

4,347,654	A	9/1982	Allen et al.
4,481,522	A	11/1984	Jastrzebski et al.
4,866,000	A	9/1989	Okita
5,029,277	A	7/1991	Kane
5,130,262	A	7/1992	Masquelier et al.
5,213,988	A	5/1993	Yamauchi et al.
5,262,345	A	11/1993	Nasser et al.
5,329,144	A	7/1994	Luryi
5,448,087	A	9/1995	Streit et al.
5,480,816	A	1/1996	Uga et al.
5,496,746	A	3/1996	Matthews
5,517,052	A	5/1996	Ishaque
5,569,612	A	10/1996	Frisina et al.
5,575,862	A	11/1996	Nishida
5,637,898	A	6/1997	Baliga
5,797,999	A	8/1998	Sannomiya et al.
5,888,857	A	3/1999	Zhang et al.
5,973,575	A	10/1999	Kamogawa et al.
6,211,028	B1	4/2001	Tsai et al.
6,310,366	B1	10/2001	Rhodes et al.
RE37,441	E	11/2001	Yamazaki
6,452,086	B1	9/2002	Muller
6,465,862	B1	10/2002	Harris
6,472,715	B1	10/2002	Liu et al.
6,670,544	B2	12/2003	Kibbel et al.
6,683,343	B2	1/2004	Matsudai et al.
6,696,314	B2	2/2004	Rhodes
6,706,550	B2	3/2004	Lee et al.
6,713,813	B2	3/2004	Marchant
6,720,622	B1	4/2004	Yu
6,737,722	B2	5/2004	Yamamoto et al.
6,744,117	B2	6/2004	Dragon et al.
6,747,883	B2	6/2004	Yasumura
6,753,202	B2	6/2004	Chen et al.
6,754,093	B2	6/2004	Lien
6,756,616	B2	6/2004	Rhodes
6,780,713	B2	8/2004	Bromberger et al.
6,831,292	B2	12/2004	Currie et al.
6,878,603	B2	4/2005	Bromberger et al.
6,921,943	B2	7/2005	Kenney et al.
6,933,215	B2	8/2005	Bromberger et al.
7,064,385	B2	6/2006	Dudek et al.
7,115,925	B2	10/2006	Rhodes
7,233,044	B2	6/2007	Dudek
7,307,327	B2	12/2007	Bahl et al.
7,504,692	B2	3/2009	Dudek et al.
8,164,124	B2	4/2012	Liu et al.
2001/0040622	A1	11/2001	Maruyama
2002/0056883	A1	5/2002	Baliga
2002/0074585	A1	6/2002	Tsang et al.
2002/0084430	A1	7/2002	Bamji et al.
2002/0093281	A1	7/2002	Cathey
2002/0102783	A1	8/2002	Fujimoto et al.
2002/0134419	A1	9/2002	Macris
2003/0026126	A1	2/2003	Uemura
2003/0030488	A1	2/2003	Hueting et al.
2003/0042511	A1	3/2003	Rhodes
2004/0027753	A1	2/2004	Friedrichs et al.
2006/0113592	A1	6/2006	Pendharkar et al.
2007/0045682	A1*	3/2007	Hong H01L 27/14601 257/292
2012/0048462	A1*	3/2012	Lee B32B 37/185 156/272.8
2013/0001661	A1	1/2013	Mao et al.
2015/0200314	A1	7/2015	Webster

OTHER PUBLICATIONS

E. Parton, CMOS Sensors, Laser Focus World, http://www.laserfocusworld.com/articles/print/volume-49/issue-10/features/cmos-sensors-cmos-based-specialty-imagers-reach-new-performance-levels.html, Oct. 14, 2013, 5 pages.

Z. Cao, Design of Pixel for High Speed CMOS Image Sensors, http://www.imagesensors.org/Past%20Workshops/2013%20Workshop/2013%20Papers/07-11_072-Cao_paper.pdf, 4 pages.

M. Tanenbaum, BSTJ: Diffused Emitter and Base Silicon Transistors, The Bell System Technical Journal, Jan. 1956, 22 pages, vol. XXXV, https://archive.org/details/bstj35-1-1.

IMEC Image Sensors and Vision Systems, http://www2.imec.be/content/user/File/Brochures/cmos%20imagers%20brochure-april26.pdf, Apr. 2014, 2 pages.

A. S. Grove, Physics and Technology of Semiconductor Devices, John Wiley Sons, Inc., New York, Nov. 1967.

W. Murray Bullis and W. R. Runyan, Influence of Mobility and Lifetime Variations on Drift-Field Effects in Silicon-Junction Devices, IEEE Transactions on Electron Devices, vol. Ed-14, No. 2, Feb. 1967.

Berinder Brar et al., Herb's Bipolar Transistors, IEEE Transactions on Electron Devices, vol. 48, No. 11, Nov. 2001.

* cited by examiner

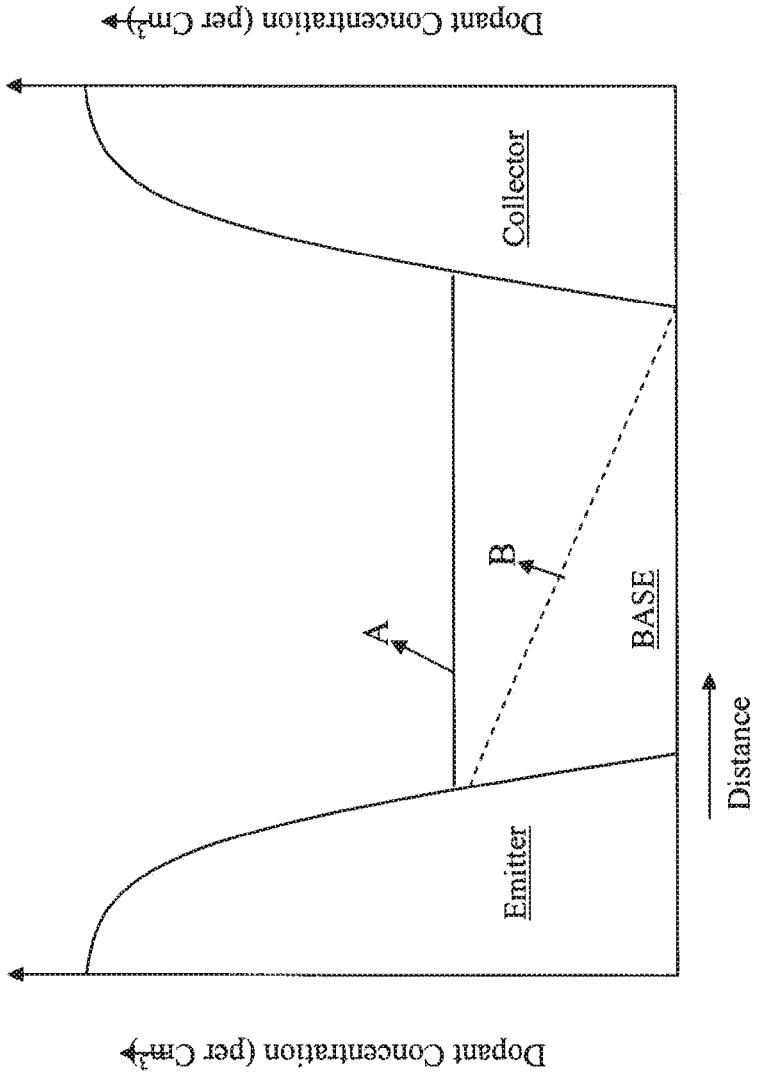

Figure 1 Prior Art

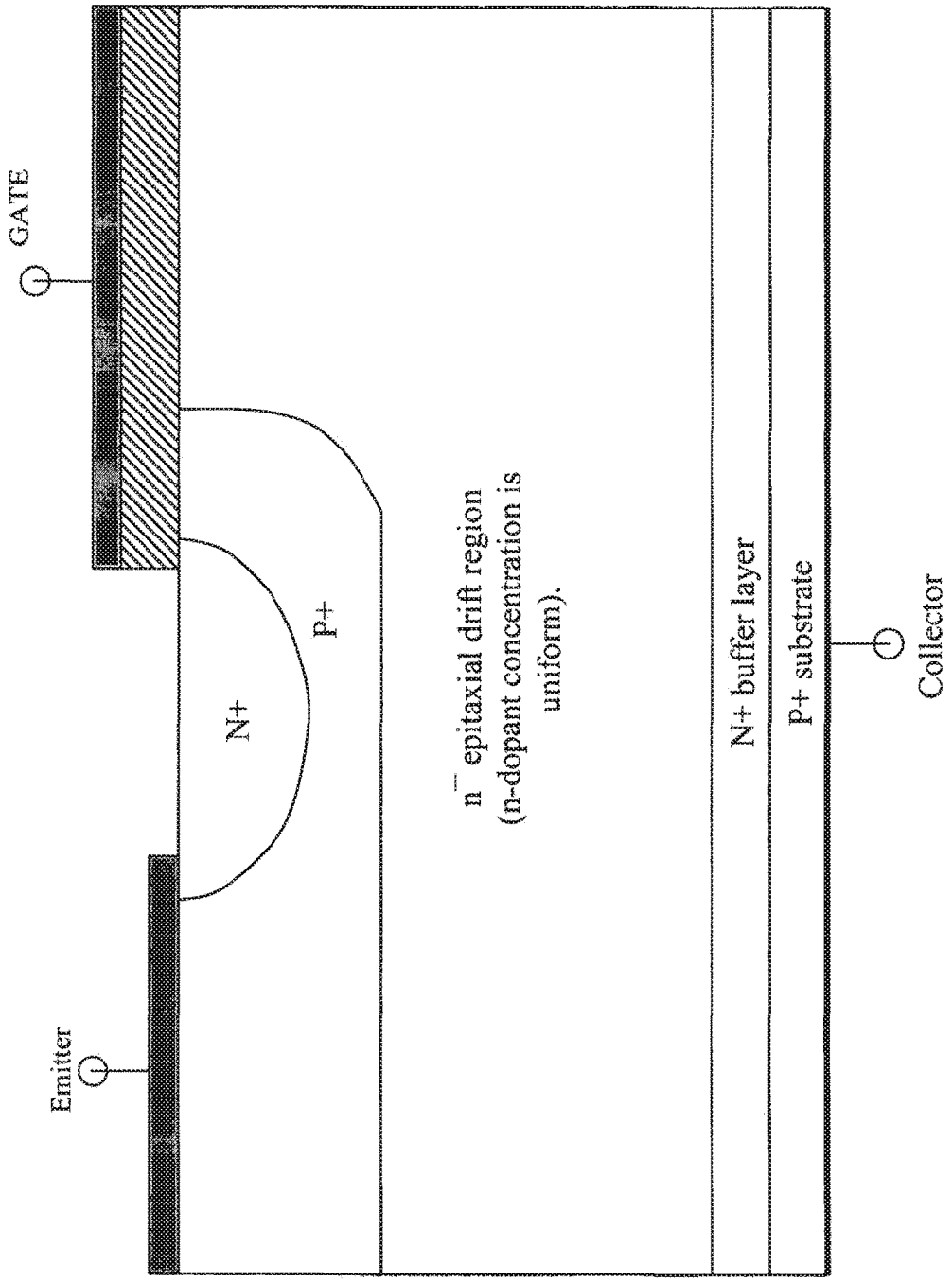

FIGURE 2 Prior art

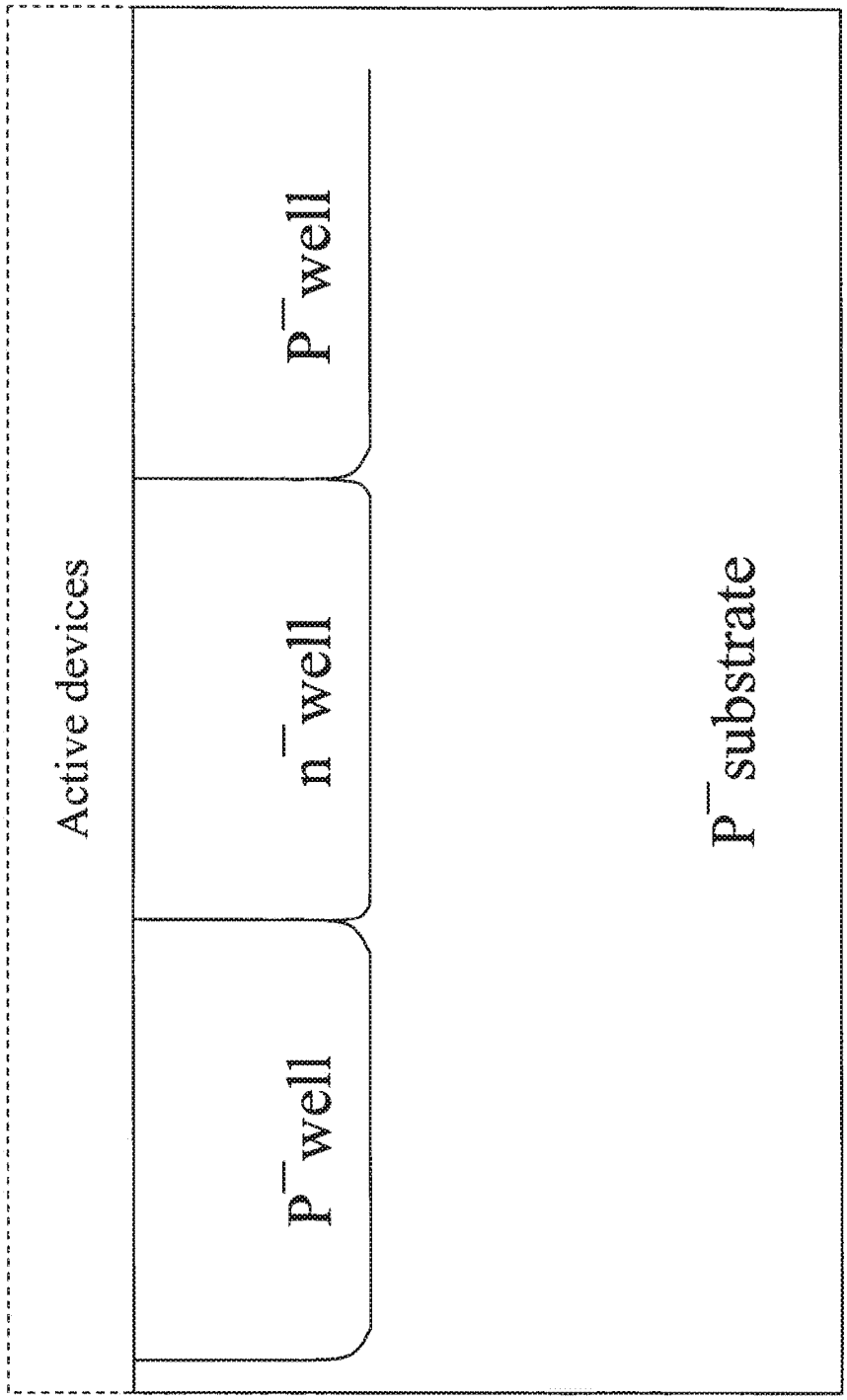

FIGURE 3A Prior art (Twin well CMOS) for a CMOS integrated circuit

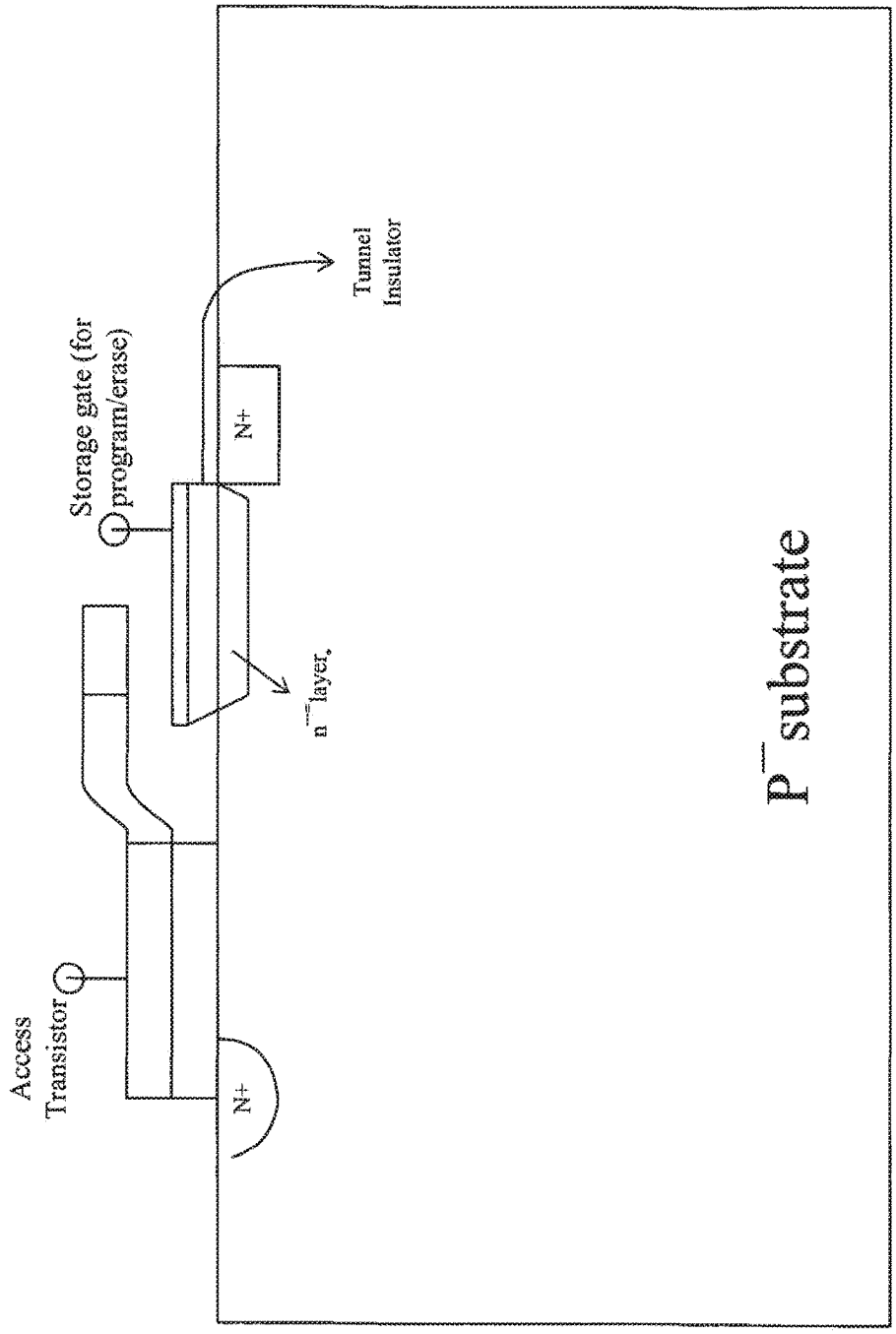

FIGURE 3B Prior art for a two-device EEPROM memory cell

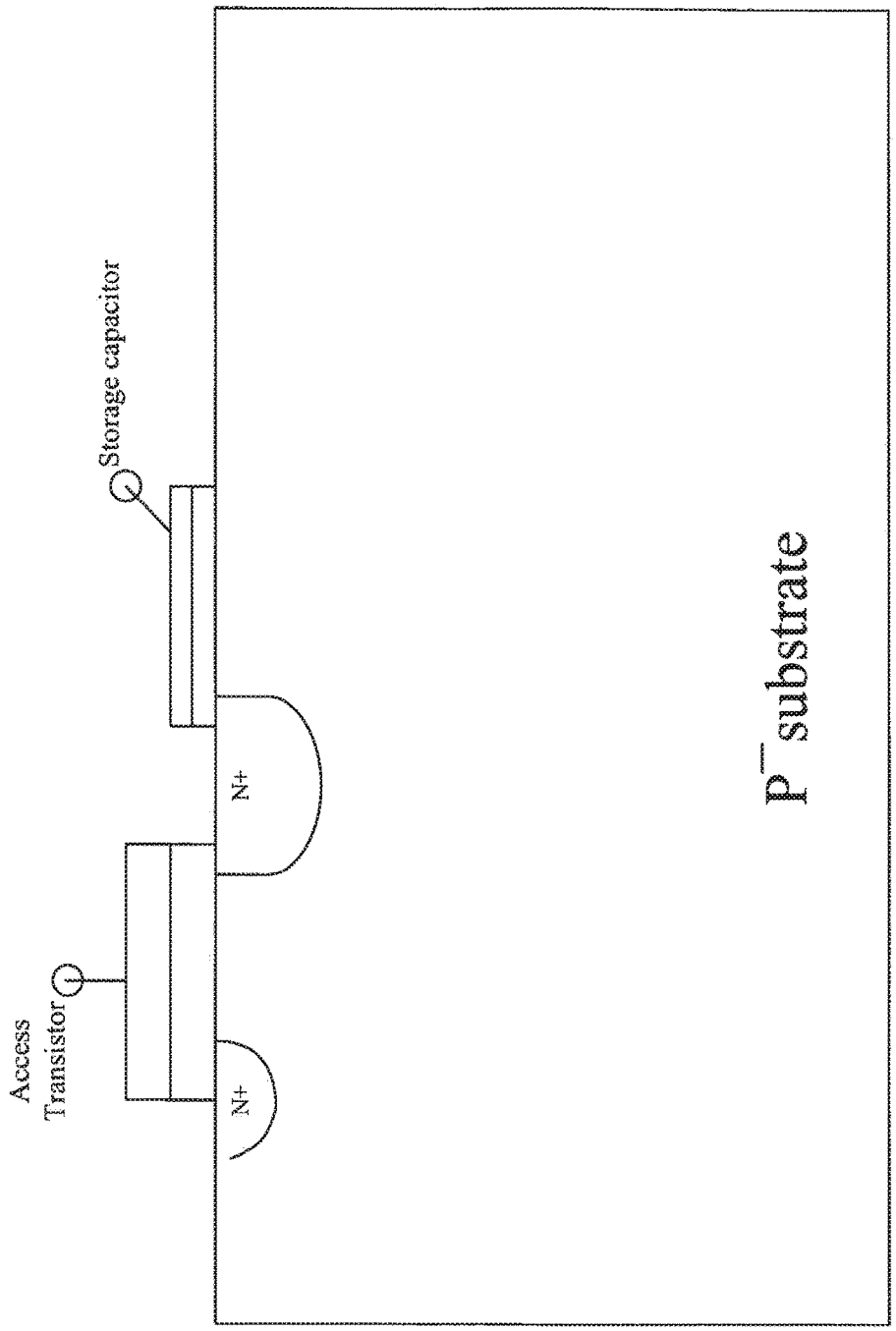

FIGURE 3C Prior art for a 1T-1C DRAM memory cell

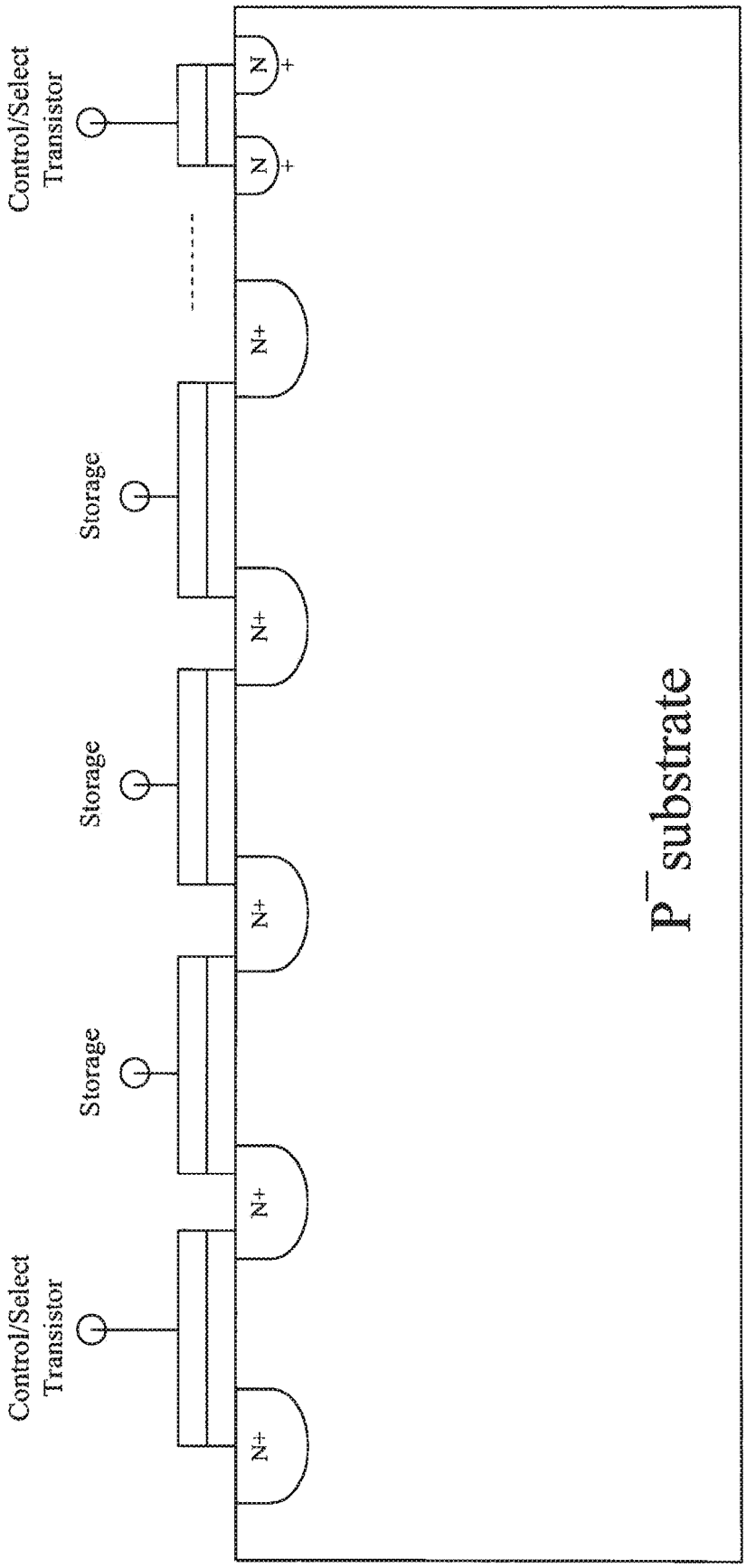

FIGURE 3D Prior art for a NAND flash memory cell

Note: Control/ Sect transistors have a single insulator - traditional MOS transistor.

Storage nodes have a stacked gate structure, typically with a floating gate and control gate comprising the stack.

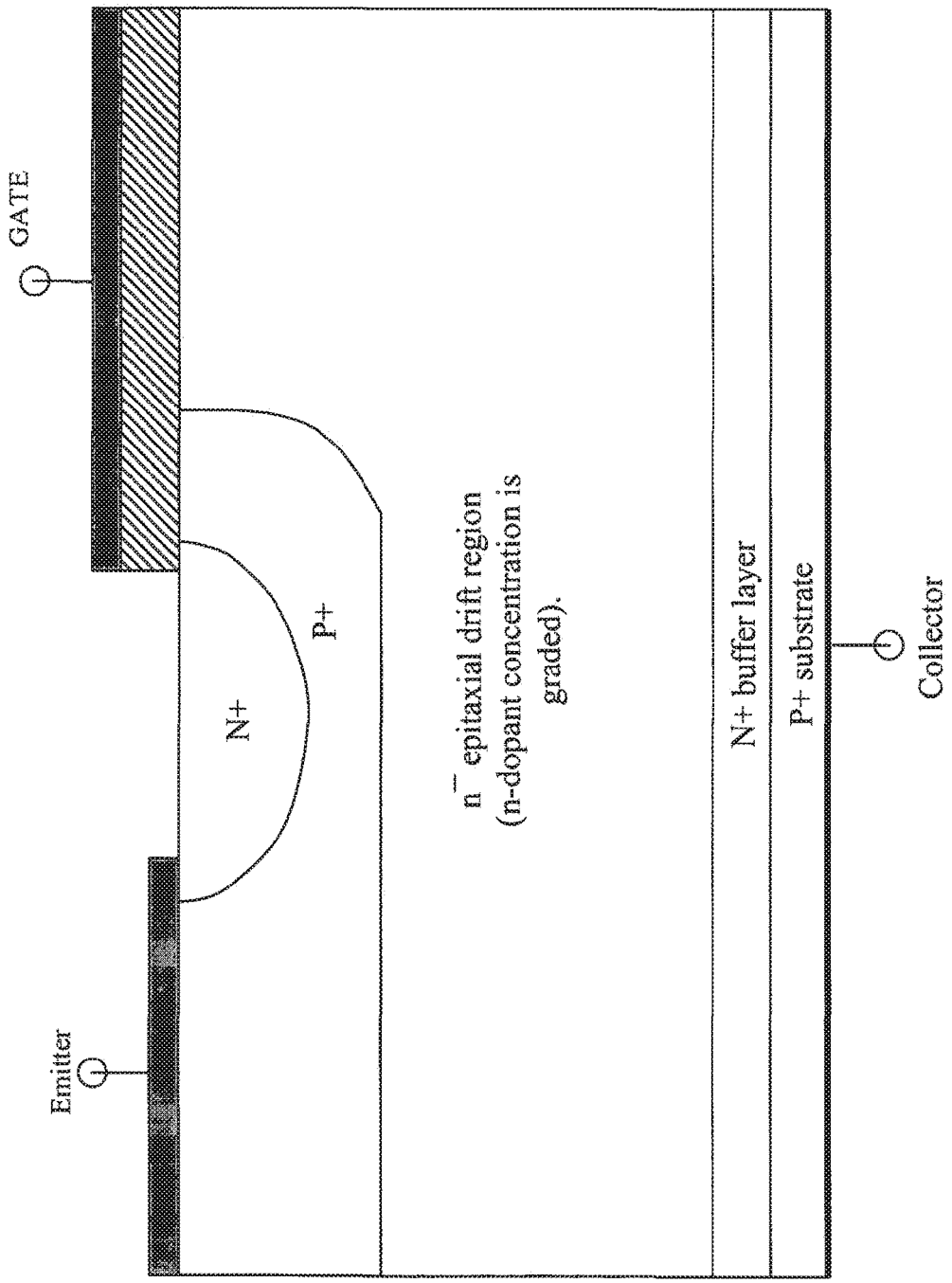

FIGURE 4 A dopant - concentration grinded drift region in a IGBT

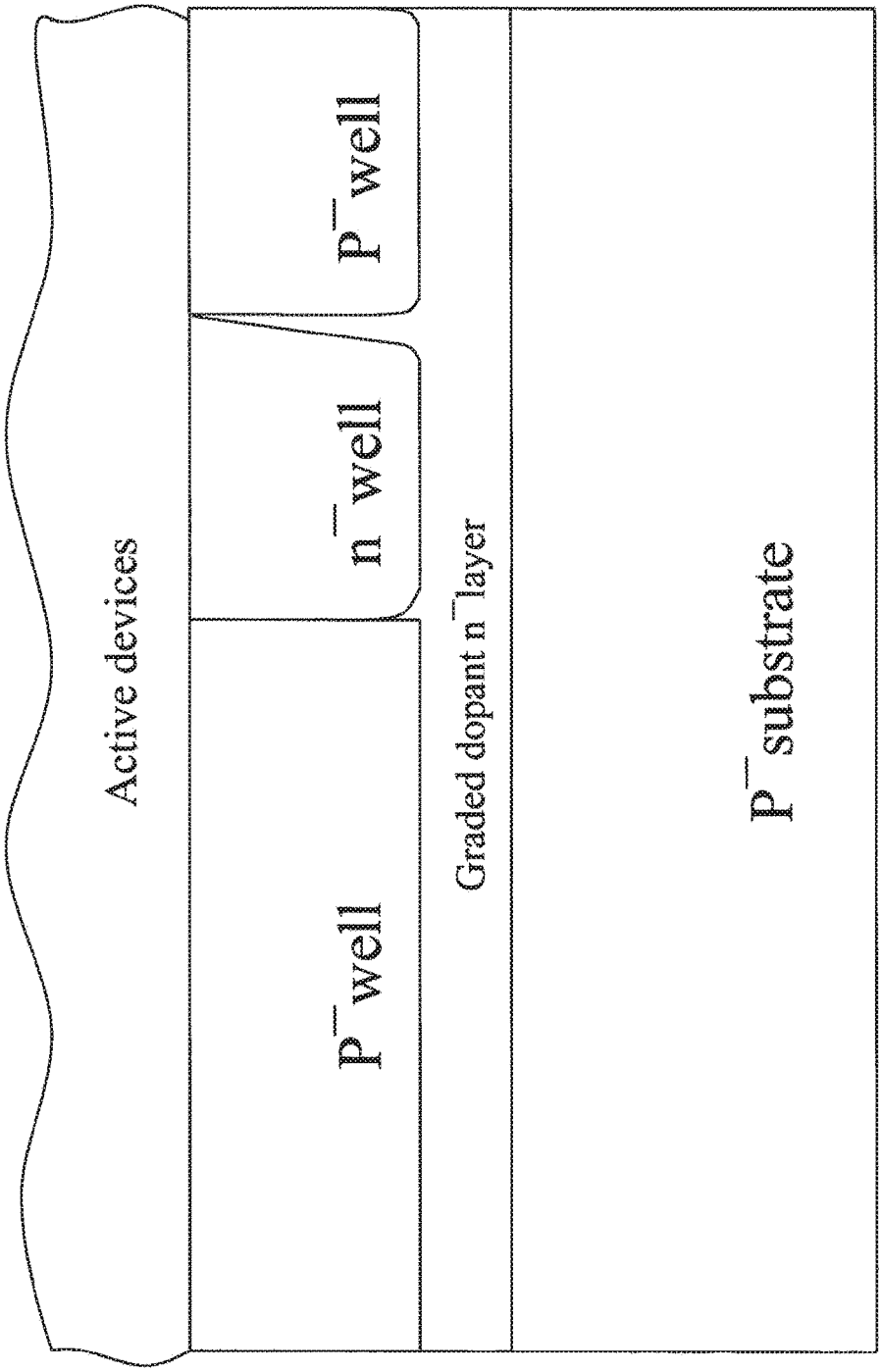

FIGURE 5A A CMOS Substrate for digital, mixed, signal, and senors IC's

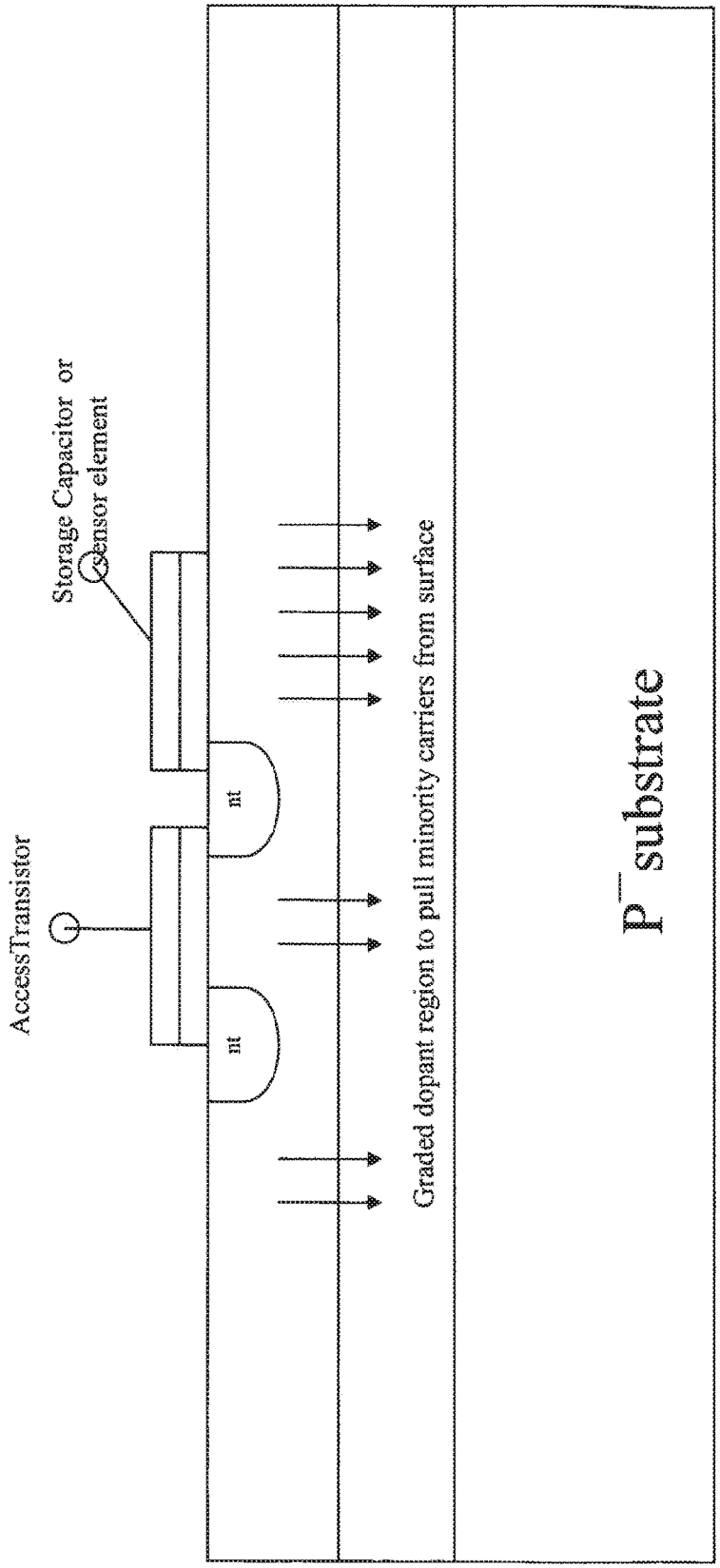

FIGURE 5B CMOS Substrate for a DRAM or image sensor, with one embodiment of the invention

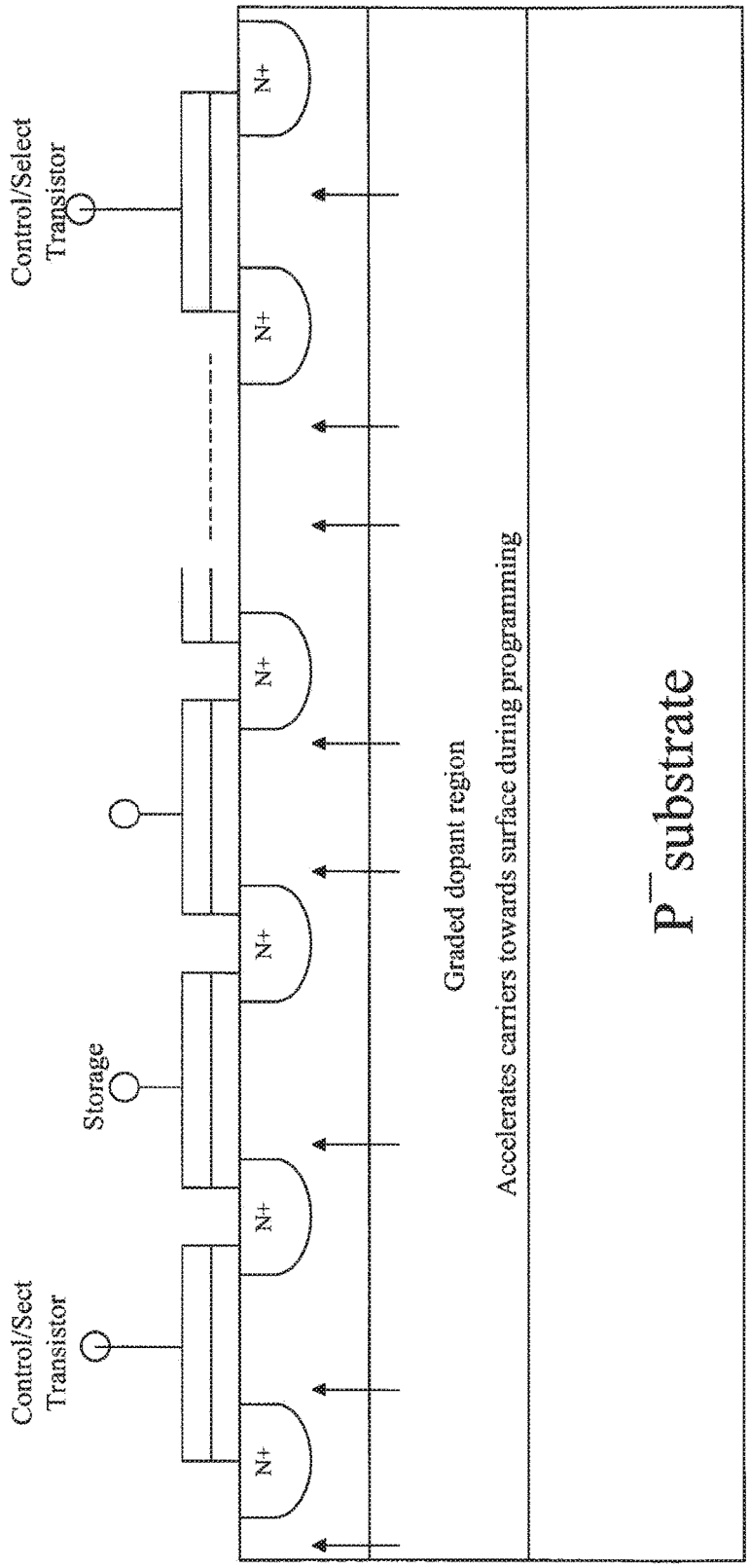

FIGURE 5C CMOS Substrate for a NAND flash device to improve programming times

SEMICONDUCTOR DEVICES WITH GRADED DOPANT REGIONS

CROSS-REFERENCE TO RELATED APPLICATIONS

This application is a Continuation of U.S. patent application Ser. No. 14/931,636, filed Nov. 3, 2015, published on Jun. 16, 2016 as U.S. Publication No. 2016-0172447, now U.S. Pat. No. 9,647,070, issued on May 9, 2017. Application Ser. No. 14/931,636 is a continuation of U.S. patent application Ser. No. 14/515,584, filed Oct. 16, 2014, published on Feb. 5, 2015, as U.S. Publication No. 2015-0035004, now U.S. Pat. No. 9,190,502, issued on Nov. 17, 2015. Application Ser. No. 14/515,584 is a Continuation of U.S. patent application Ser. No. 13/854,319 filed Apr. 1, 2013, published on Aug. 29, 2013, as U.S. Publication No. 2013-0221488. Application Ser. No. 13/854,319 is a Continuation of Ser. No. 11/622,496, filed Jan. 12, 2007, published on Jul. 12, 2007, as Publication No. 2007-0158790, now U.S. Pat. No. 8,421,195, issued on Apr. 16, 2013. Application Ser. No. 11/622,496, is a Division of U.S. patent application Ser. No. 10/934,915, filed Sep. 3, 2004, published on Mar. 9, 2006, as U.S. Publication No. 2006-0049464. U.S. Pat. Nos. 9,647,070, 9,190,502, and 8,421,195, and Patent Application Publication Nos. 2016-0172447, 2015-0035004, 2013-0221488, 2007-0158790, and 2006-0049464, are incorporated herein by reference in their entirety.

TECHNICAL FIELD

This present invention relates to all semiconductor devices and systems. Particularly it applies to diffused diodes, avalanche diodes, Schottky devices, power MOS transistors, JFET's, RF bipolar transistors, IGBTs (Insulated Gate Bipolar Transistors), varactors, digital VLSI, mixed signal circuits and sensor devices including camera ICs employing CCD (Charge Coupled Device) as well as CMOS technologies.

BACKGROUND

Bipolar Junction Transistors (BJT) are classified as minority carrier devices because minority carriers are the principle device conduction mechanism. However, majority carriers also play a small but finite role in modulating the conductivity in BJTs. Consequently, both carriers (electrons and holes) play a role in the switching performance of BJTs. The maximum frequency of operation in BJTs is limited by the base transit time as well as the quick recombination of the majority carriers when the device is switched off (prior to beginning the next cycle). The dominant carrier mechanism in BJTs is carrier diffusion. The carrier drift current component is fairly small, especially in uniformly doped base BJTs. Efforts have been made in graded base transistors to create an aiding drift field to enhance the diffusing minority carrier's speed from emitter to collector. However, most semiconductor devices, including various power MOSFETs (traditional, DMOS, lateral, vertical and a host of other configurations), IGBT's (Insulated Gated Base Transistors), still use a uniformly doped 'drift epitaxial' region in the base. FIG. **1** shows the relative doping concentration versus distance in a BJT. FIG. **2** shows the uniformly doped epi region in an IGBT. In contrast to BJTs, MOS devices are majority carrier devices for conduction. The conduction is channel dominated. The channel can be a surface in one plane in planar devices. The surface can also be on the

sidewalls in a vertical device. Other device architectures to combine planar and vertical conductions are also possible. The maximum frequency of operation is dictated primarily by source-drain separation distance. Most MOS devices use a uniformly doped substrate (or a well region). When a MOSFET is optimally integrated with a BJT in a monolithic fashion, an IGBT results. The IGBT inherits the advantages of both MOSFET and BJT. It also brings new challenges because the required characteristics (electron transit and hole recombination as fast as possible in n-channel IGBT) necessitate different dopant gradients either in the same layer at different positions, or at the interfaces of similar or dissimilar layers.

Retrograde wells have been attempted, with little success, to help improve soft error immunity in SRAMs and visual quality in imaging circuits. FIG. **3**A shows a typical CMOS VLSI device employing a twin well substrate, on which active devices are subsequently fabricated. FIGS. **3**B, **3**C, and **3**D illustrate device cross sections, as practiced today. Retrograde and halo wells have also been attempted to improve refresh time in DRAMs (dynamic random-access memories), as well as, reducing dark current (background noise) and enhance RGB (Red, Green, Blue) color resolution in digital camera ICs. Most of these techniques either divert the minority carriers away from the active regions of critical charge storage nodes at the surface, or, increase minority carrier density locally as the particular application requires.

BRIEF DESCRIPTION OF THE DRAWINGS

For a more complete understanding of the present invention, and the advantages thereof, reference is now made to the following descriptions taken in conjunction with the accompanying drawings, in which:

FIG. **1** illustrates the relative doping profiles of emitter, base and collector for the two most popular bipolar junction transistors: namely, uniform base ("A") and graded base ("B");

FIG. **2** illustrates the cross section of a commercial IGBT with a uniform epitaxial drift region (base);

FIGS. **3**A, **3**B, **3**C, and **3**D illustrate cross sections of commonly used prior art CMOS silicon substrates; FIG. **3**A showing a typical prior art IC with two wells (one n^-well in which p-channel transistors are subsequently fabricated and one p^-well in which n-channel transistors are subsequently fabricated); FIG. **3**B showing a prior art EEPROM (Electronically Erasable Programmable Read-Only Memory) memory cell having a tunnel insulator; FIG. **3**C showing a prior art DRAM memory cell; and FIG. **3**D showing a prior art NAND flash memory cell;

FIG. **4** illustrates the cross section of an IGBT, using one embodiment of the invention described here, where the dopant is optimally graded in the epitaxial drift region; and

FIGS. **5**A, **5**B, and **5**C illustrate the cross sections of a CMOS silicon substrate with two wells and an underlying layer using embodiments of the invention to improve performance in each application—VLSI logic, DRAM/image IC, nonvolatile memory IC.

DETAILED DESCRIPTION

The relative doping concentrations of emitter and collector regions varies from 10^{18} to $10^{20}/cm^3$, whereas the base region is 10^{14} to $10^{16}/cm^3$ depending on the desired characteristics of the BJT. In graded base p-n-p transistors, the donor dopant concentration may be 10 to 100× at the emitter-base junction, relative to the base-collector junction

(1×). The gradient can be linear, quasi linear, exponential or complimentary error function. The relative slope of the donor concentration throughout the base creates a suitable aiding drift electric field, to help the holes (p-n-p transistor) transverse from emitter to collector. Since the aiding drift electric field helps hole conduction, the current gain at a given frequency is enhanced, relative to a uniformly-doped (base) BJT. The improvement in cut-off frequency (or, frequency at unity gain, f_T) can be as large as 2×-5×. Similar performance improvements are also applicable to n-p-n transistors.

As illustrated in FIG. **4**, in one embodiment according to the invention, a donor gradient is established from the emitter-drift epitaxial base region junction of the punch-through IGBT, to the drift epitaxial base region—n^+ buffer layer boundary (electrons in this case are accelerated in their transit from emitter to collector). The "average" base resistance is optimized so that conductivity modulation and lifetime (for minority carriers) in the base region are not compromised. By sweeping the carriers towards the n^+ buffer region a number of advantages are obtained. First, the frequency of operation (combination of t_{on} and t_{off} as is known in the IGBT commercial nomenclature) can be enhanced. Second, and maybe more importantly, during t_{off}, holes can be recombined much quicker at the n^+ buffer layer, compared to the uniformly doped n^-epitaxial drift region by establishing a different dopant gradient near the n^+ buffer layer. It should be noted that the drift region can also be a non-epitaxial silicon substrate. Although epitaxy enhances lifetime, it is not mandatory. Different layers of dopant regions can be transferred through wafer to wafer bonding (or other similar transfer mechanisms) for eventual device fabrication. The "reverse recovery time" for an IGBT is significantly improved due to the optimized graded dopant in the so called "drift region" as well as at the interfaces of the drift region. Graded dopants can also be implemented in the n^+ buffer layer as well as other regions adjacent to the respective layers. Two important performance enhancements are the result of dopant gradients. For example, in an n-channel IGBT, electrons can be swept from source to drain rapidly, while at the same time holes can be recombined closer to the n^+ buffer layer. This can improve t_{on} and t_{off} in the same device.

As illustrated in FIGS. **5**A, **5**B, and **5**C, donor gradient is also of benefit to very large scale integrated circuits (VLSI)—VLSI logic, DRAM, nonvolatile memory like NAND flash. Spurious minority carriers can be generated by clock switching in digital VLSI logic and memory ICs. These unwanted carriers can discharge dynamically-held "actively held high" nodes. In most cases, statically-held nodes (with V_{cc}) cannot be affected. Degradation of refresh time in DRAMs is one of the results, because the capacitor holds charge dynamically. Similarly, degradation of CMOS digital images in digital imaging ICs is another result of the havoc caused by minority carriers. Pixel and color resolution can be significantly enhanced in imaging ICs with the embodiments described herein. Creating "subterranean" recombination centers underneath the wells (gold doping, platinum doping) as is done in some high-voltage diodes is not practical for VLSI circuits. Hence, a novel technique is described herein which creates a drift field to sweep these unwanted minority carriers from the active circuitry at the surface into the substrate in a monolithic die as quickly as possible. In a preferred embodiment, the subterranean n^-layer has a graded donor concentration to sweep the minority carriers deep into the substrate. One or more of such layers can also be implemented through wafer to wafer bonding or similar "transfer" mechanisms. This n^-layer can be a deeply-implanted layer. It can also be an epitaxial layer. As desired, the n^-well and p^-wells can also be graded or retrograded in dopants to sweep those carriers away from the surface as well. The graded dopant can also be implemented in surface channel MOS devices to accelerate majority carriers towards the drain. To decrease programming time in nonvolatile memory devices, carriers should be accelerated towards the surface when programming of memory cells is executed. The graded dopant can also be used to fabricate superior Junction Field-Effect transistors where the "channel pinch-off" is controlled by a graded channel instead of a uniformly doped channel (as practiced in the prior art).

One of ordinary skill and familiarity in the art will recognize that the concepts taught herein can be customized and tailored to a particular application in many advantageous ways. For instance, minority carriers can be channeled to the surface to aid programming in nonvolatile memory devices (NOR, NAND, multivalued-cell). Moreover, single-well, and triple-well CMOS fabrication techniques can also be optimized to incorporate these embodiments individually and collectively. Any modifications of such embodiments (described here) fall within the spirit and scope of the invention. Hence, they fall within the scope of the claims described below.

Although the invention has been described with reference to specific embodiments, these descriptions are not meant to be construed in a limiting sense. Various modifications of the disclosed embodiments, as well as alternative embodiments of the invention will become apparent to persons skilled in the art upon reference to the description of the invention. It should be appreciated by those skilled in the art that the conception and the specific embodiment disclosed may be readily utilized as a basis for modifying or designing other structures for carrying out the same purposes of the present invention. It should also be realized by those skilled in the art that such equivalent constructions do not depart from the spirit and scope of the invention as set forth in the appended claims.

It is therefore, contemplated that the claims will cover any such modifications or embodiments that fall within the true scope of the invention.

What is claimed is:

1. A semiconductor device, comprising:

a substrate of a first doping type at a first doping level having first and second surfaces;

a first active region disposed adjacent the first surface of the substrate with a second doping type opposite in conductivity to the first doping type and within which transistors can be formed;

a second active region separate from the first active region disposed adjacent to the first active region and within which transistors can be formed;

transistors formed in at least one of the first active region or second active region; and

at least a portion of at least one of the first and second active regions having at least one graded dopant concentration to aid carrier movement from the first surface to the second surface of the substrate.

2. The semiconductor device of claim **1**, wherein the substrate is a p-type substrate.

3. The semiconductor device of claim **1**, wherein the substrate is an n-type substrate.

4. The semiconductor device of claim **1**, wherein the substrate has epitaxial silicon on top of a nonepitaxial substrate.

5. The semiconductor device of claim **1**, wherein the first active region and second active region contain one of either p-channel and n-channel devices.

6. The semiconductor device of claim **1**, wherein the first active region and second active region contain either p-channel or n-channel devices in n-wells or p-wells, respectively, and each well has a graded dopant.

7. The semiconductor device of claim **1**, wherein the first active region and second active region are each separated by at least one isolation region.

8. The semiconductor device of claim **1**, wherein the graded dopant is fabricated with an ion implantation process.

9. A semiconductor device, comprising:

a substrate of a first doping type at a first doping level having first and second surfaces;

a first active region disposed adjacent the first surface of the substrate with a second doping type opposite in conductivity to the first doping type and within which transistors can be formed in the surface thereof;

a second active region separate from the first active region disposed adjacent to the first active region and within which transistors can be formed in the surface thereof;

transistors formed in at least one of the first active region or second active region; and

at least a portion of at least one of the first and second active regions having at least one graded dopant concentration to aid carrier movement from the surface to the substrate.

10. The semiconductor device of claim **9**, wherein the substrate is a p-type substrate.

11. The semiconductor device of claim **9**, wherein the substrate is an n-type substrate.

12. The semiconductor device of claim **9**, wherein the substrate has epitaxial silicon on top of a nonepitaxial substrate.

13. The semiconductor device of claim **9**, wherein the first active region and second active region contain at least one of either p-channel and n-channel devices.

14. The semiconductor device of claim **9**, wherein the first active region and second active region contain either p-channel or n-channel devices in n-wells or p-wells, respectively, and each well has a graded dopant.

15. The semiconductor device of claim **9**, wherein the first active region and second active region are each separated by at least one isolation region.

16. The semiconductor device of claim **9**, wherein the graded dopant is fabricated with an ion implantation process.

17. The semiconductor device of claim **1**, wherein the first and second active regions are formed adjacent the first surface of the substrate.

18. The semiconductor device of claim **1**, wherein the transistors which can be formed in the first and second active regions are CMOS transistors requiring a source, a drain, a gate and a channel region.

* * * * *