Trials@uspto.gov
Tel: 571-272-7822

Paper 10
Entered: May 18, 2023

UNITED STATES PATENT AND TRADEMARK OFFICE

BEFORE THE PATENT TRIAL AND APPEAL BOARD

SONY GROUP CORPORATION,
Petitioner,

v.

GREENTHREAD LLC
Patent Owner.

IPR2023-00324 (Patent No. 11,121,222 B2)
IPR2023-00325 (Patent No. 11,316,014 B2)
IPR2023-00375 (Patent No. 10,734,481 B2)
IPR2023-00376 (Patent No. 10,510,842 B2)[1]

Before GRACE KARAFFA OBERMANN, CHRISTOPHER L. CRUMBLEY, and CHRISTOPHER M. KAISER, *Administrative Patent Judges.*

Per Curiam.

DECISION
Settlement Prior to Institution of Trial
37 C.F.R. § 42.74

---

[1] This Order addresses issues that are the same in the above-captioned proceedings. The parties are not authorized to use a multi-case caption.

I. INTRODUCTION

On May 3, 2023, after email authorization by the Board, Petitioner and Patent Owner (collectively "the Parties") filed a Joint Motion to Terminate *Inter Partes* Review in the above-identified proceeding. Paper 8 ("Joint Motion").[2] In support of the Joint Motion, the Parties filed copies of Confidential Settlement-Related Agreements (Exs. 2001, 2002 ("Settlement Agreements")), as well as a Joint Request that Agreements be Treated as Business Confidential Information and be Kept Separate Pursuant to 35 U.S.C. § 317(b) and 37 C.F.R. § 42.74 (Paper 9 ("Joint Request")).

II. DISCUSSION

In the Joint Motion, "[t]he Parties jointly request that the Board terminate this *inter partes* review in its entirety." Paper 8, 2. The Parties represent that the filed Settlement Agreements are true copies and "together form the complete agreement resolving the disputes in the *inter partes* review between the Parties" and that "[t]here are no other collateral agreements between the Parties made in connection with, or in contemplation of, the termination sought." *Id.* at 1. The Parties further represent that the District Court proceedings between the Parties involving the above-identified patent at issue was dismissed on April 27, 2023. *Id.* at 2.

The Parties also filed a Joint Request that the Settlement Agreements be treated as business confidential information and be kept separate from the

---

[2] For purposes of expediency, we cite to papers and exhibits filed in IPR2023-00324, unless otherwise noted. The Parties filed similar papers and exhibits in each of the above-identified proceedings.

file of the patent involved in this *inter partes* proceeding. Paper 9, 1. As the filing party for confidential Exhibit 2001, Patent Owner represents that it "is not permitted to share certain portions . . . with any party other than the Board and its staff." Paper 8, 1. Patent Owner further represents that "Exhibit 2001, to which Sony is not a party, is to be filed such that it is available to the Board and Patent Owner only" and that "the Parties are in agreement with this procedure." *Id.*

This proceeding is in its preliminary phase. Petitioner filed its Petition on December 12, 2022, and Patent Owner has not filed a Preliminary Response, which was due May 12, 2023. Paper 5, 1; Ex. 3002, 1. Accordingly, we have not yet entered a decision on institution. In view of the early stage of the proceeding and the settlement between the Parties, we determine that good cause exists to terminate the proceeding with respect to the Parties.

After reviewing each of the Settlement Agreements, we find that the Settlement Agreements contain confidential business information regarding the terms of settlement. We determine that good cause exists to treat the Settlement Agreements as business confidential information pursuant to 35 U.S.C. § 317(b) and 37 C.F.R. § 42.74(c) and kept separate from the files of the challenged patent.

The Parties further request that "the Board inform them if anyone seeks production of the agreements and afford them an opportunity to address whether such request is supported by good cause." Paper 9, 1. We have no such procedure to serve upon the Parties a request for access to the Settlement Agreements, and, further, our regulations do not require us to do

so. Therefore, we decline to issue an order regarding any request for access to the Settlement Agreements.

This Order does not constitute a final written decision pursuant to 35 U.S.C. § 318(a).

Accordingly, for the reasons discussed above, it is:

III. ORDER

ORDERED that the Joint Motion to Terminate is *granted*;

FURTHER ORDERED that the Joint Request that Agreements be Treated as Business Confidential Information and be Kept Separate Pursuant to 35 U.S.C. § 317(b) and 37 C.F.R. § 42.74 is *granted*,

FURTHER ORDERED that Exhibits 2001 and 2002 shall remain business confidential information, and

FURTHER ORDERED that the Petition is *dismissed.*

IPR2023-00324 (Patent No. 11,121,222 B2)
IPR2023-00325 (Patent No. 11,316,014 B2)
IPR2023-00375 (Patent No. 10,734,481 B2)
IPR2023-00376 (Patent No. 10,510,842 B2)

For PETITIONER:

Matthew A. Smith
Andrew S. Baluch
SMITH BALUCH LLP
smith@smithbaluch.com
baluch@smithbaluch.com

For PATENT OWNER:

Alan Whitehurst
Nicholas T. Matich
Arvind Jairam
Stuart McCommas
Archis "Neil" Ozarka
MCKOOL SMITH, P.C.
awhitehurst@mckoolsmith.com
nmatich@mckoolsmith.com
ajairam@mckoolsmith.com
smccommas@mckoolsmith.com
nozarkar@mckoolsmith.com

Trials@uspto.gov
Tel: 571-272-7822

Paper 10
Date: May 17, 2023

UNITED STATES PATENT AND TRADEMARK OFFICE

BEFORE THE PATENT TRIAL AND APPEAL BOARD

DELL TECHNOLOGIES INC. AND DELL INC.,
Petitioner,

v.

GREENTHREAD LLC,
Patent Owner.

IPR2023-00506 (Patent No. 10,510,842 B2)
IPR2023-00507 (Patent No. 10,734,481 B2)
IPR2023-00509 (Patent No. 11,121,222 B2)
IPR2023-00510 (Patent No. 11,316,014 B2)[1]

Before CHRISTOPHER L. CRUMBLEY, CHRISTOPHER M. KAISER, and KRISTI L. R. SAWERT, *Administrative Patent Judges*.

Per Curiam.

DECISION
Settlement Prior to Institution of Trial
37 C.F.R. § 42.74

---

[1] This Order addresses issues that are the same in the above-captioned proceedings. The parties are not authorized to use a multi-case caption.

I. INTRODUCTION

On May 2, 2023, after email authorization by the Board, Petitioner and Patent Owner (collectively "the Parties") filed a Joint Motion to Terminate *Inter Partes* Review in the above-identified proceeding. Paper 9 ("Joint Motion").[2] In support of the Joint Motion, the Parties filed copies of Confidential Settlement-Related Agreements (Exs. 2001, 2002 ("Settlement Agreements")), as well as a Joint Request to Keep Separate Pursuant to 35 U.S.C. § 317(b) and 37 C.F.R. § 42.74(c) (Paper 10 ("Joint Request")).

II. DISCUSSION

In the Joint Motion, "[t]he Parties jointly request that the Board terminate this *inter partes* review of the Patent-in-Suit, Case No. IPR2023-00506, in its entirety." Paper 9, 2. The Parties represent that the filed Settlement Agreements are true copies and "together form the complete agreement resolving the disputes in the *inter partes* review between the Parties" and that "[t]here are no other collateral agreements between the Parties made in connection with, or in contemplation of, the termination sought." *Id.* at 1. The Parties further represent that a "joint motion to dismiss the lawsuit between" the Parties "involving the Patent-in-Suit was filed on April 24, 2023." *Id.* at 2.

The Parties also filed a Joint Request that the Settlement Agreements be treated as business confidential information and be kept separate from the file of the patent involved in this *inter partes* proceeding and the files of this

---

[2] For purposes of expediency, we cite to papers and exhibits filed in IPR2023-00506, unless otherwise noted. The Parties filed similar papers and exhibits in each of the above-identified proceedings.

proceeding. Paper 10, 1. As the filing party for confidential Exhibit 2001, Patent Owner represents that it "is not permitted to share certain portions . . . with any party other than the Board and its staff." Paper 9, 1. Patent Owner further represents that "Exhibit 2001, to which Dell is not a party, is to be filed such that it is available to the Board and Patent Owner only" and that "the Parties are in agreement with this procedure." *Id.*

This proceeding is in its preliminary phase. Petitioner filed its Petition on January 27, 2022, and Patent Owner has not filed a Preliminary Response. Paper 9, 2. Accordingly, we have not yet entered a decision on institution. In view of the early stage of the proceeding and the settlement between the Parties, we determine that good cause exists to terminate the proceeding with respect to the Parties.

After reviewing each of the Settlement Agreements, we find that the Settlement Agreements contain confidential business information regarding the terms of settlement. We determine that good cause exists to treat the Settlement Agreements as business confidential information pursuant to 35 U.S.C. § 317(b) and 37 C.F.R. § 42.74(c) and kept separate from the files of the challenged patent. On the other hand, as to the Parties' request that the Board keep the Settlement Agreements "separate from the files of this proceeding," Paper 10, 1, our regulations do not require us to do so. Therefore, we decline to issue an order to keep the Settlement Agreements separate from the file of this *inter partes* proceeding.

The Parties further request that "the Board inform them if anyone seeks production of the agreements and afford them an opportunity to address whether such request is supported by good cause." Paper 10, 1. We

have no such procedure to serve upon the Parties a request for access to the Settlement Agreements, and, further, our regulations do not require us to do so. Therefore, we decline to issue an order regarding any request for access to the Settlement Agreements.

This Order does not constitute a final written decision pursuant to 35 U.S.C. § 318(a).

Accordingly, for the reasons discussed above, it is:

III. ORDER

ORDERED that the Joint Motion to Terminate is *granted*;

FURTHER ORDERED that the Joint Request to Keep Separate Pursuant to 35 U.S.C. § 317(b) and 37 C.F.R. § 42.74(c) is *granted-in-part* and *denied-in-part*,

FURTHER ORDERED that Exhibits 2001 and 2002 shall remain business confidential information, and

FURTHER ORDERED that the Petition is *dismissed*.

IPR2023-00506 (Patent No. 10,510,842 B2)
IPR2023-00507 (Patent No. 10,734,481 B2)
IPR2023-00509 (Patent No. 11,121,222 B2)
IPR2023-00510 (Patent No. 11,316,014 B2)

FOR PETITIONER:

Christopher TL Douglas
Lauren N. Griffin
ALSTON & BIRD LLP
christopher.douglas@alston.com
lauren.griffin@alston.com

FOR PATENT OWNER:

Alan Whitehurst
Arvind Jairam
Archis Ozarkar
Nicholas Matich
Stuart McCommas
MCKOOL SMITH, P.C.
awhitehurst@mckoolsmith.com
ajairam@mckoolsmith.com
nozarkar@mckoolsmith.com
nmatich@mckoolsmith.com
smccommas@mckoolsmith.com

AO 120 (Rev. 08/10)

TO: Mail Stop 8 Director of the U.S. Patent and Trademark Office P.O. Box 1450 Alexandria, VA 22313-1450	REPORT ON THE FILING OR DETERMINATION OF AN ACTION REGARDING A PATENT OR TRADEMARK

In Compliance with 35 U.S.C. § 290 and/or 15 U.S.C. § 1116 you are hereby advised that a court action has been filed in the U.S. District Court Western District of Texas, Waco Division on the following

☐ Trademarks or ☑ Patents. (☐ the patent action involves 35 U.S.C. § 292.):

DOCKET NO.	DATE FILED	U.S. DISTRICT COURT
6:22-cv-00105	1/27/2022	Western District of Texas, Waco Division

PLAINTIFF	DEFENDANT
GREENTHREAD, LLC	INTEL CORPORATION, DELL INC., AND DELL TECHNOLOGIES INC.,

	PATENT OR TRADEMARK NO.	DATE OF PATENT OR TRADEMARK	HOLDER OF PATENT OR TRADEMARK
1	8,421,195	4/16/2013	GREENTHREAD, LLC
2	9,190,502	11/17/2015	GREENTHREAD, LLC
3	10,510,842	12/17/2019	GREENTHREAD, LLC
4	10,734,481	8/4/2020	GREENTHREAD, LLC
5	11,121,222	9/14/2021	GREENTHREAD, LLC

In the above---entitled case, the following patent(s)/ trademark(s) have been included:

DATE INCLUDED	INCLUDED BY ☑ Amendment ☐ Answer ☐ Cross Bill ☐ Other Pleading	
PATENT OR TRADEMARK NO.	DATE OF PATENT OR TRADEMARK	HOLDER OF PATENT OR TRADEMARK
1 11,316,014	4/26/2022	GREENTHREAD, LLC
2		
3		
4		
5		

In the above---entitled case, the following decision has been rendered or judgement issued:

DECISION/JUDGEMENT

CLERK	(BY) DEPUTY CLERK	DATE

Copy 1---Upon initiation of action, mail this copy to Director Copy 3---Upon termination of action, mail this copy to Director
Copy 2---Upon filing document adding patent(s), mail this copy to Director Copy 4---Case file copy

UNITED STATES PATENT AND TRADEMARK OFFICE

UNITED STATES DEPARTMENT OF COMMERCE
United States Patent and Trademark Office
Address: COMMISSIONER FOR PATENTS
P.O. Box 1450
Alexandria, Virginia 22313-1450
www.uspto.gov

APPLICATION NO.	ISSUE DATE	PATENT NO.	ATTORNEY DOCKET NO.	CONFIRMATION NO.
17/371,839	04/26/2022	11316014	GRTD60-35314	2197

25883 7590 04/06/2022
MUNCK WILSON MANDALA L.L.P
P.O. Drawer 800889
DALLAS, TX 75380

ISSUE NOTIFICATION

The projected patent number and issue date are specified above.

Determination of Patent Term Adjustment under 35 U.S.C. 154 (b)
(application filed on or after May 29, 2000)

The Patent Term Adjustment is 0 day(s). Any patent to issue from the above-identified application will include an indication of the adjustment on the front page.

If a Continued Prosecution Application (CPA) was filed in the above-identified application, the filing date that determines Patent Term Adjustment is the filing date of the most recent CPA.

Applicant will be able to obtain more detailed information by accessing the Patent Application Information Retrieval (PAIR) WEB site (http://pair.uspto.gov).

Any questions regarding the Patent Term Extension or Adjustment determination should be directed to the Office of Patent Legal Administration at (571)-272-7702. Questions relating to issue and publication fee payments should be directed to the Application Assistance Unit (AAU) of the Office of Patents Stakeholder Experience (OPSE), Stakeholder Support Division (SSD) at (571)-272-4200.

INVENTOR(s) (Please see PAIR WEB site http://pair.uspto.gov for additional inventors):

G.R. MOHAN RAO, ALLEN, TX;

APPLICANT(s) (Please see PAIR WEB site http://pair.uspto.gov for additional applicants):

GREENTHREAD, LLC, Dallas, TX;

The United States represents the largest, most dynamic marketplace in the world and is an unparalleled location for business investment, innovation, and commercialization of new technologies. The USA offers tremendous resources and advantages for those who invest and manufacture goods here. Through SelectUSA, our nation works to encourage and facilitate business investment. To learn more about why the USA is the best country in the world to develop technology, manufacture products, and grow your business, visit SelectUSA.gov.

PART B - FEE(S) TRANSMITTAL

Complete and send this form, together with applicable fee(s), by mail or fax, or via EFS-Web.

By mail, send to: Mail Stop ISSUE FEE
Commissioner for Patents
P.O. Box 1450
Alexandria, Virginia 22313-1450

By fax, send to: (571)-273-2885

INSTRUCTIONS: This form should be used for transmitting the ISSUE FEE and PUBLICATION FEE (if required). Blocks 1 through 5 should be completed where appropriate. All further correspondence including the Patent, advance orders and notification of maintenance fees will be mailed to the current correspondence address as indicated unless corrected below or directed otherwise in Block 1, by (a) specifying a new correspondence address; and/or (b) indicating a separate "FEE ADDRESS" for maintenance fee notifications.

CURRENT CORRESPONDENCE ADDRESS (Note: Use Block 1 for any change of address)

25883 7590 03/23/2022
MUNCK WILSON MANDALA L.L.P
P.O. Drawer 800889
DALLAS, TX 75380

Note: A certificate of mailing can only be used for domestic mailings of the Fee(s) Transmittal. This certificate cannot be used for any other accompanying papers. Each additional paper, such as an assignment or formal drawing, must have its own certificate of mailing or transmission.

Certificate of Mailing or Transmission

I hereby certify that this Fee(s) Transmittal is being deposited with the United States Postal Service with sufficient postage for first class mail in an envelope addressed to the Mail Stop ISSUE FEE address above, or being transmitted to the USPTO via EFS-Web or by facsimile to (571) 273-2885, on the date below.

(Typed or printed name)

(Signature)

(Date)

APPLICATION NO.	FILING DATE	FIRST NAMED INVENTOR	ATTORNEY DOCKET NO.	CONFIRMATION NO.
17/371,839	07/09/2021	G.R. MOHAN RAO	GRTD60-35314	2197

TITLE OF INVENTION: SEMICONDUCTOR DEVICES WITH GRADED DOPANT REGIONS

APPLN. TYPE	ENTITY STATUS	ISSUE FEE DUE	PUBLICATION FEE DUE	PREV. PAID ISSUE FEE	TOTAL FEE(S) DUE	DATE DUE
nonprovisional	UNDISCOUNTED	$1200	$0.00	$0.00	$1200	06/23/2022

EXAMINER	ART UNIT	CLASS-SUBCLASS
ARORA, AJAY	2892	257-025000

1. Change of correspondence address or indication of "Fee Address" (37 CFR 1.363).

❑ Change of correspondence address (or Change of Correspondence Address form PTO/AIA/122 or PTO/SB/122) attached.

❑ "Fee Address" indication (or "Fee Address" Indication form PTO/AIA/47 or PTO/SB/47; Rev 03-02 or more recent) attached. **Use of a Customer Number is required.**

2. For printing on the patent front page, list
(1) The names of up to 3 registered patent attorneys or agents OR, alternatively,
(2) The name of a single firm (having as a member a registered attorney or agent) and the names of up to 2 registered patent attorneys or agents. If no name is listed, no name will be printed.

1 Gregory M. Howison
2
3

3. ASSIGNEE NAME AND RESIDENCE DATA TO BE PRINTED ON THE PATENT (print or type)

PLEASE NOTE: Unless an assignee is identified below, no assignee data will appear on the patent. If an assignee is identified below, the document must have been previously recorded, or filed for recordation, as set forth in 37 CFR 3.11 and 37 CFR 3.81(a). Completion of this form is NOT a substitute for filing an assignment.

(A) NAME OF ASSIGNEE: GREENTHREAD, LLC

(B) RESIDENCE: (CITY and STATE OR COUNTRY): DALLAS, TEXAS

Please check the appropriate assignee category or categories (will not be printed on the patent) : ❑ Individual ☒ Corporation or other private group entity ❑ Government

4a. Fees submitted: ☒ Issue Fee ❑ Publication Fee (if required) ❑ Advance Order - # of Copies _____

4b. Method of Payment: *(Please first reapply any previously paid fee shown above)*

☒ Electronic Payment via EFS-Web ❑ Enclosed check ❑ Non-electronic payment by credit card (Attach form PTO-2038)

☒ The Director is hereby authorized to charge the required fee(s), any deficiency, or credit any overpayment to Deposit Account No. 50-0208

5. **Change in Entity Status** (from status indicated above)

❑ Applicant certifying micro entity status. See 37 CFR 1.29

❑ Applicant asserting small entity status. See 37 CFR 1.27

❑ Applicant changing to regular undiscounted fee status.

NOTE: Absent a valid certification of Micro Entity Status (see forms PTO/SB/15A and 15B), issue fee payment in the micro entity amount will not be accepted at the risk of application abandonment.
NOTE: If the application was previously under micro entity status, checking this box will be taken to be a notification of loss of entitlement to micro entity status.
NOTE: Checking this box will be taken to be a notification of loss of entitlement to small or micro entity status, as applicable.

NOTE: This form must be signed in accordance with 37 CFR 1.31 and 1.33. See 37 CFR 1.4 for signature requirements and certifications.

Authorized Signature /William G. Howison, Reg. #66850/ Date March 23, 2022

Typed or printed name William G. Howison Registration No. 66,850

Electronic Patent Application Fee Transmittal

Application Number:	17371839
Filing Date:	09-Jul-2021
Title of Invention:	SEMICONDUCTOR DEVICES WITH GRADED DOPANT REGIONS
First Named Inventor/Applicant Name:	G.R. MOHAN RAO
Filer:	William G. Howison/Anna Nguyen
Attorney Docket Number:	GRTD60-35314

Filed as Large Entity

Filing Fees for Utility under 35 USC 111(a)

Description	Fee Code	Quantity	Amount	Sub-Total in USD($)
Basic Filing:				
Pages:				
Claims:				
Miscellaneous-Filing:				
Petition:				
Patent-Appeals-and-Interference:				
Post-Allowance-and-Post-Issuance:				

Description	Fee Code	Quantity	Amount	Sub-Total in USD($)
PUBL. FEE- EARLY, VOLUNTARY, OR NORMAL	1504	1	0	0
UTILITY APPL ISSUE FEE	1501	1	1200	1200
Extension-of-Time:				
Miscellaneous:				
			Total in USD ($)	**1200**

Electronic Acknowledgement Receipt

EFS ID:	45300225
Application Number:	17371839
International Application Number:	
Confirmation Number:	2197
Title of Invention:	SEMICONDUCTOR DEVICES WITH GRADED DOPANT REGIONS
First Named Inventor/Applicant Name:	G.R. MOHAN RAO
Customer Number:	25883
Filer:	William G. Howison
Filer Authorized By:	
Attorney Docket Number:	GRTD60-35314
Receipt Date:	23-MAR-2022
Filing Date:	09-JUL-2021
Time Stamp:	15:40:43
Application Type:	Utility under 35 USC 111(a)

Payment information:

Submitted with Payment	yes
Payment Type	CARD
Payment was successfully received in RAM	$1200
RAM confirmation Number	E20223MF45452092
Deposit Account	500208
Authorized User	William Howison

The Director of the USPTO is hereby authorized to charge indicated fees and credit any overpayment as follows:

37 CFR 1.16 (National application filing, search, and examination fees)

37 CFR 1.17 (Patent application and reexamination processing fees)

37 CFR 1.19 (Document supply fees)

37 CFR 1.21 (Miscellaneous fees and charges)

File Listing:

Document Number	Document Description	File Name	File Size(Bytes)/ Message Digest	Multi Part /.zip	Pages (if appl.)
1	Issue Fee Payment (PTO-85B)	GRT35314IssueFeeTransmittal.pdf	1231571 c23ddc1d6949e077a00bd27b1dc82df75f150ea8	no	1
Warnings:					
Information:					
2	Fee Worksheet (SB06)	fee-info.pdf	40395 591f9a252b7a02f743b3047422b0137efc393983	no	2
Warnings:					
Information:					
		Total Files Size (in bytes):	1271966		

This Acknowledgement Receipt evidences receipt on the noted date by the USPTO of the indicated documents, characterized by the applicant, and including page counts, where applicable. It serves as evidence of receipt similar to a Post Card, as described in MPEP 503.

New Applications Under 35 U.S.C. 111
If a new application is being filed and the application includes the necessary components for a filing date (see 37 CFR 1.53(b)-(d) and MPEP 506), a Filing Receipt (37 CFR 1.54) will be issued in due course and the date shown on this Acknowledgement Receipt will establish the filing date of the application.
National Stage of an International Application under 35 U.S.C. 371
If a timely submission to enter the national stage of an international application is compliant with the conditions of 35 U.S.C. 371 and other applicable requirements a Form PCT/DO/EO/903 indicating acceptance of the application as a national stage submission under 35 U.S.C. 371 will be issued in addition to the Filing Receipt, in due course.
New International Application Filed with the USPTO as a Receiving Office
If a new international application is being filed and the international application includes the necessary components for an international filing date (see PCT Article 11 and MPEP 1810), a Notification of the International Application Number and of the International Filing Date (Form PCT/RO/105) will be issued in due course, subject to prescriptions concerning national security, and the date shown on this Acknowledgement Receipt will establish the international filing date of the application.

UNITED STATES PATENT AND TRADEMARK OFFICE

UNITED STATES DEPARTMENT OF COMMERCE
United States Patent and Trademark Office
Address: COMMISSIONER FOR PATENTS
P.O. Box 1450
Alexandria, Virginia 22313-1450
www.uspto.gov

NOTICE OF ALLOWANCE AND FEE(S) DUE

25883 7590 03/23/2022
MUNCK WILSON MANDALA L.L.P
P.O. Drawer 800889
DALLAS, TX 75380

EXAMINER
ARORA, AJAY

ART UNIT	PAPER NUMBER
2892	

DATE MAILED: 03/23/2022

APPLICATION NO.	FILING DATE	FIRST NAMED INVENTOR	ATTORNEY DOCKET NO.	CONFIRMATION NO.
17/371,839	07/09/2021	G.R. MOHAN RAO	GRTD60-35314	2197

TITLE OF INVENTION: SEMICONDUCTOR DEVICES WITH GRADED DOPANT REGIONS

APPLN. TYPE	ENTITY STATUS	ISSUE FEE DUE	PUBLICATION FEE DUE	PREV. PAID ISSUE FEE	TOTAL FEE(S) DUE	DATE DUE
nonprovisional	UNDISCOUNTED	$1200	$0.00	$0.00	$1200	06/23/2022

THE APPLICATION IDENTIFIED ABOVE HAS BEEN EXAMINED AND IS ALLOWED FOR ISSUANCE AS A PATENT. PROSECUTION ON THE MERITS IS CLOSED. THIS NOTICE OF ALLOWANCE IS NOT A GRANT OF PATENT RIGHTS. THIS APPLICATION IS SUBJECT TO WITHDRAWAL FROM ISSUE AT THE INITIATIVE OF THE OFFICE OR UPON PETITION BY THE APPLICANT. SEE 37 CFR 1.313 AND MPEP 1308.

THE ISSUE FEE AND PUBLICATION FEE (IF REQUIRED) MUST BE PAID WITHIN THREE MONTHS FROM THE MAILING DATE OF THIS NOTICE OR THIS APPLICATION SHALL BE REGARDED AS ABANDONED. THIS STATUTORY PERIOD CANNOT BE EXTENDED. SEE 35 U.S.C. 151. THE ISSUE FEE DUE INDICATED ABOVE DOES NOT REFLECT A CREDIT FOR ANY PREVIOUSLY PAID ISSUE FEE IN THIS APPLICATION. IF AN ISSUE FEE HAS PREVIOUSLY BEEN PAID IN THIS APPLICATION (AS SHOWN ABOVE), THE RETURN OF PART B OF THIS FORM WILL BE CONSIDERED A REQUEST TO REAPPLY THE PREVIOUSLY PAID ISSUE FEE TOWARD THE ISSUE FEE NOW DUE.

HOW TO REPLY TO THIS NOTICE:

I. Review the ENTITY STATUS shown above. If the ENTITY STATUS is shown as SMALL or MICRO, verify whether entitlement to that entity status still applies.

If the ENTITY STATUS is the same as shown above, pay the TOTAL FEE(S) DUE shown above.

If the ENTITY STATUS is changed from that shown above, on PART B - FEE(S) TRANSMITTAL, complete section number 5 titled "Change in Entity Status (from status indicated above)".

For purposes of this notice, small entity fees are 1/2 the amount of undiscounted fees, and micro entity fees are 1/2 the amount of small entity fees.

II. PART B - FEE(S) TRANSMITTAL, or its equivalent, must be completed and returned to the United States Patent and Trademark Office (USPTO) with your ISSUE FEE and PUBLICATION FEE (if required). If you are charging the fee(s) to your deposit account, section "4b" of Part B - Fee(s) Transmittal should be completed. If an equivalent of Part B is filed, a request to reapply a previously paid issue fee must be clearly made, and delays in processing may occur due to the difficulty in recognizing the paper as an equivalent of Part B.

III. All communications regarding this application must give the application number. Please direct all communications prior to issuance to Mail Stop ISSUE FEE unless advised to the contrary.

IMPORTANT REMINDER: Maintenance fees are due in utility patents issuing on applications filed on or after Dec. 12, 1980. It is patentee's responsibility to ensure timely payment of maintenance fees when due. More information is available at www.uspto.gov/PatentMaintenanceFees.

Greenthread Ex. 2071, p. 18 of 211
Semiconductor v. Greenthread
IPR2023-01244

PART B - FEE(S) TRANSMITTAL

Complete and send this form, together with applicable fee(s), by mail or fax, or via EFS-Web.

By mail, send to: Mail Stop ISSUE FEE
Commissioner for Patents
P.O. Box 1450
Alexandria, Virginia 22313-1450

By fax, send to: (571)-273-2885

INSTRUCTIONS: This form should be used for transmitting the ISSUE FEE and PUBLICATION FEE (if required). Blocks 1 through 5 should be completed where appropriate. All further correspondence including the Patent, advance orders and notification of maintenance fees will be mailed to the current correspondence address as indicated unless corrected below or directed otherwise in Block 1, by (a) specifying a new correspondence address; and/or (b) indicating a separate "FEE ADDRESS" for maintenance fee notifications.

CURRENT CORRESPONDENCE ADDRESS (Note: Use Block 1 for any change of address)

25883 7590 03/23/2022
MUNCK WILSON MANDALA L.L.P
P.O. Drawer 800889
DALLAS, TX 75380

Note: A certificate of mailing can only be used for domestic mailings of the Fee(s) Transmittal. This certificate cannot be used for any other accompanying papers. Each additional paper, such as an assignment or formal drawing, must have its own certificate of mailing or transmission.

Certificate of Mailing or Transmission

I hereby certify that this Fee(s) Transmittal is being deposited with the United States Postal Service with sufficient postage for first class mail in an envelope addressed to the Mail Stop ISSUE FEE address above, or being transmitted to the USPTO via EFS-Web or by facsimile to (571) 273-2885, on the date below.

(Typed or printed name)

(Signature)

(Date)

APPLICATION NO.	FILING DATE	FIRST NAMED INVENTOR	ATTORNEY DOCKET NO.	CONFIRMATION NO.
17/371,839	07/09/2021	G.R. MOHAN RAO	GRTD60-35314	2197

TITLE OF INVENTION: SEMICONDUCTOR DEVICES WITH GRADED DOPANT REGIONS

APPLN. TYPE	ENTITY STATUS	ISSUE FEE DUE	PUBLICATION FEE DUE	PREV. PAID ISSUE FEE	TOTAL FEE(S) DUE	DATE DUE
nonprovisional	UNDISCOUNTED	$1200	$0.00	$0.00	$1200	06/23/2022

EXAMINER	ART UNIT	CLASS-SUBCLASS
ARORA, AJAY	2892	257-025000

1. Change of correspondence address or indication of "Fee Address" (37 CFR 1.363).

❑ Change of correspondence address (or Change of Correspondence Address form PTO/AIA/122 or PTO/SB/122) attached.

❑ "Fee Address" indication (or "Fee Address" Indication form PTO/AIA/47 or PTO/SB/47; Rev 03-02 or more recent) attached. **Use of a Customer Number is required.**

2. For printing on the patent front page, list
(1) The names of up to 3 registered patent attorneys or agents OR, alternatively,
(2) The name of a single firm (having as a member a registered attorney or agent) and the names of up to 2 registered patent attorneys or agents. If no name is listed, no name will be printed.

1_____
2_____
3_____

3. ASSIGNEE NAME AND RESIDENCE DATA TO BE PRINTED ON THE PATENT (print or type)

PLEASE NOTE: Unless an assignee is identified below, no assignee data will appear on the patent. If an assignee is identified below, the document must have been previously recorded, or filed for recordation, as set forth in 37 CFR 3.11 and 37 CFR 3.81(a). Completion of this form is NOT a substitute for filing an assignment.

(A) NAME OF ASSIGNEE (B) RESIDENCE: (CITY and STATE OR COUNTRY)

Please check the appropriate assignee category or categories (will not be printed on the patent) : ❑ Individual ❑ Corporation or other private group entity ❑ Government

4a. Fees submitted: ❑Issue Fee ❑Publication Fee (if required) ❑Advance Order - # of Copies _____

4b. Method of Payment: *(Please first reapply any previously paid fee shown above)*

❑ Electronic Payment via EFS-Web ❑ Enclosed check ❑ Non-electronic payment by credit card (Attach form PTO-2038)

❑ The Director is hereby authorized to charge the required fee(s), any deficiency, or credit any overpayment to Deposit Account No. _____

5. **Change in Entity Status** (from status indicated above)

❑ Applicant certifying micro entity status. See 37 CFR 1.29

❑ Applicant asserting small entity status. See 37 CFR 1.27

❑ Applicant changing to regular undiscounted fee status.

NOTE: Absent a valid certification of Micro Entity Status (see forms PTO/SB/15A and 15B), issue fee payment in the micro entity amount will not be accepted at the risk of application abandonment.
NOTE: If the application was previously under micro entity status, checking this box will be taken to be a notification of loss of entitlement to micro entity status.
NOTE: Checking this box will be taken to be a notification of loss of entitlement to small or micro entity status, as applicable.

NOTE: This form must be signed in accordance with 37 CFR 1.31 and 1.33. See 37 CFR 1.4 for signature requirements and certifications.

Authorized Signature _____ Date _____

Typed or printed name _____ Registration No. _____

Greenthread Ex. 2071, p. 19 of 211
Semiconductor v. Greenthread
IPR2023-01244

UNITED STATES DEPARTMENT OF COMMERCE
United States Patent and Trademark Office
Address: COMMISSIONER FOR PATENTS
P.O. Box 1450
Alexandria, Virginia 22313-1450
www.uspto.gov

APPLICATION NO.	FILING DATE	FIRST NAMED INVENTOR	ATTORNEY DOCKET NO.	CONFIRMATION NO.
17/371,839	07/09/2021	G.R. MOHAN RAO	GRTD60-35314	2197

25883 7590 03/23/2022
MUNCK WILSON MANDALA L.L.P
P.O. Drawer 800889
DALLAS, TX 75380

EXAMINER
ARORA, AJAY

ART UNIT	PAPER NUMBER
2892	

DATE MAILED: 03/23/2022

Determination of Patent Term Adjustment under 35 U.S.C. 154 (b)
(Applications filed on or after May 29, 2000)

The Office has discontinued providing a Patent Term Adjustment (PTA) calculation with the Notice of Allowance.

Section 1(h)(2) of the AIA Technical Corrections Act amended 35 U.S.C. 154(b)(3)(B)(i) to eliminate the requirement that the Office provide a patent term adjustment determination with the notice of allowance. See Revisions to Patent Term Adjustment, 78 Fed. Reg. 19416, 19417 (Apr. 1, 2013). Therefore, the Office is no longer providing an initial patent term adjustment determination with the notice of allowance. The Office will continue to provide a patent term adjustment determination with the Issue Notification Letter that is mailed to applicant approximately three weeks prior to the issue date of the patent, and will include the patent term adjustment on the patent. Any request for reconsideration of the patent term adjustment determination (or reinstatement of patent term adjustment) should follow the process outlined in 37 CFR 1.705.

Any questions regarding the Patent Term Extension or Adjustment determination should be directed to the Office of Patent Legal Administration at (571)-272-7702. Questions relating to issue and publication fee payments should be directed to the Customer Service Center of the Office of Patent Publication at 1-(888)-786-0101 or (571)-272-4200.

Greenthread Ex. 2071, p. 20 of 211
Semiconductor v. Greenthread
IPR2023-01244

OMB Clearance and PRA Burden Statement for PTOL-85 Part B

The Paperwork Reduction Act (PRA) of 1995 requires Federal agencies to obtain Office of Management and Budget approval before requesting most types of information from the public. When OMB approves an agency request to collect information from the public, OMB (i) provides a valid OMB Control Number and expiration date for the agency to display on the instrument that will be used to collect the information and (ii) requires the agency to inform the public about the OMB Control Number's legal significance in accordance with 5 CFR 1320.5(b).

The information collected by PTOL-85 Part B is required by 37 CFR 1.311. The information is required to obtain or retain a benefit by the public which is to file (and by the USPTO to process) an application. Confidentiality is governed by 35 U.S.C. 122 and 37 CFR 1.14. This collection is estimated to take 30 minutes to complete, including gathering, preparing, and submitting the completed application form to the USPTO. Time will vary depending upon the individual case. Any comments on the amount of time you require to complete this form and/or suggestions for reducing this burden, should be sent to the Chief Information Officer, U.S. Patent and Trademark Office, U.S. Department of Commerce, P.O. Box 1450, Alexandria, Virginia 22313-1450. DO NOT SEND FEES OR COMPLETED FORMS TO THIS ADDRESS. SEND TO: Commissioner for Patents, P.O. Box 1450, Alexandria, Virginia 22313-1450. Under the Paperwork Reduction Act of 1995, no persons are required to respond to a collection of information unless it displays a valid OMB control number.

Privacy Act Statement

The Privacy Act of 1974 (P.L. 93-579) requires that you be given certain information in connection with your submission of the attached form related to a patent application or patent. Accordingly, pursuant to the requirements of the Act, please be advised that: (1) the general authority for the collection of this information is 35 U.S.C. 2(b)(2); (2) furnishing of the information solicited is voluntary; and (3) the principal purpose for which the information is used by the U.S. Patent and Trademark Office is to process and/or examine your submission related to a patent application or patent. If you do not furnish the requested information, the U.S. Patent and Trademark Office may not be able to process and/or examine your submission, which may result in termination of proceedings or abandonment of the application or expiration of the patent.

The information provided by you in this form will be subject to the following routine uses:

1. The information on this form will be treated confidentially to the extent allowed under the Freedom of Information Act (5 U.S.C. 552) and the Privacy Act (5 U.S.C 552a). Records from this system of records may be disclosed to the Department of Justice to determine whether disclosure of these records is required by the Freedom of Information Act.
2. A record from this system of records may be disclosed, as a routine use, in the course of presenting evidence to a court, magistrate, or administrative tribunal, including disclosures to opposing counsel in the course of settlement negotiations.
3. A record in this system of records may be disclosed, as a routine use, to a Member of Congress submitting a request involving an individual, to whom the record pertains, when the individual has requested assistance from the Member with respect to the subject matter of the record.
4. A record in this system of records may be disclosed, as a routine use, to a contractor of the Agency having need for the information in order to perform a contract. Recipients of information shall be required to comply with the requirements of the Privacy Act of 1974, as amended, pursuant to 5 U.S.C. 552a(m).
5. A record related to an International Application filed under the Patent Cooperation Treaty in this system of records may be disclosed, as a routine use, to the International Bureau of the World Intellectual Property Organization, pursuant to the Patent Cooperation Treaty.
6. A record in this system of records may be disclosed, as a routine use, to another federal agency for purposes of National Security review (35 U.S.C. 181) and for review pursuant to the Atomic Energy Act (42 U.S.C. 218(c)).
7. A record from this system of records may be disclosed, as a routine use, to the Administrator, General Services, or his/her designee, during an inspection of records conducted by GSA as part of that agency's responsibility to recommend improvements in records management practices and programs, under authority of 44 U.S.C. 2904 and 2906. Such disclosure shall be made in accordance with the GSA regulations governing inspection of records for this purpose, and any other relevant (i.e., GSA or Commerce) directive. Such disclosure shall not be used to make determinations about individuals.
8. A record from this system of records may be disclosed, as a routine use, to the public after either publication of the application pursuant to 35 U.S.C. 122(b) or issuance of a patent pursuant to 35 U.S.C. 151. Further, a record may be disclosed, subject to the limitations of 37 CFR 1.14, as a routine use, to the public if the record was filed in an application which became abandoned or in which the proceedings were terminated and which application is referenced by either a published application, an application open to public inspection or an issued patent.
9. A record from this system of records may be disclosed, as a routine use, to a Federal, State, or local law enforcement agency, if the USPTO becomes aware of a violation or potential violation of law or regulation.

Notice of Allowability	Application No. 17/371,839	Applicant(s) RAO, G.R. MOHAN	
	Examiner AJAY ARORA	Art Unit 2892	AIA (FITF) Status No

-- The MAILING DATE of this communication appears on the cover sheet with the correspondence address--

All claims being allowable, PROSECUTION ON THE MERITS IS (OR REMAINS) CLOSED in this application. If not included herewith (or previously mailed), a Notice of Allowance (PTOL-85) or other appropriate communication will be mailed in due course. **THIS NOTICE OF ALLOWABILITY IS NOT A GRANT OF PATENT RIGHTS.** This application is subject to withdrawal from issue at the initiative of the Office or upon petition by the applicant. See 37 CFR 1.313 and MPEP 1308.

1. ☑ This communication is responsive to 3/4/2022.
   ☐ A declaration(s)/affidavit(s) under **37 CFR 1.130(b)** was/were filed on _____.

2. ☐ An election was made by the applicant in response to a restriction requirement set forth during the interview on _____; the restriction requirement and election have been incorporated into this action.

3. ☑ The allowed claim(s) is/are 1-30 . As a result of the allowed claim(s), you may be eligible to benefit from the **Patent Prosecution Highway** program at a participating intellectual property office for the corresponding application. For more information, please see **http://www.uspto.gov/patents/init_events/pph/index.jsp** or send an inquiry to **PPHfeedback@uspto.gov.**

4. ☐ Acknowledgment is made of a claim for foreign priority under 35 U.S.C. § 119(a)-(d) or (f).

   Certified copies:

   a) ☐ All b) ☐ Some* c) ☐ None of the:

   1. ☐ Certified copies of the priority documents have been received.
   2. ☐ Certified copies of the priority documents have been received in Application No. _____ .
   3. ☐ Copies of the certified copies of the priority documents have been received in this national stage application from the International Bureau (PCT Rule 17.2(a)).

   * Certified copies not received: _____ .

Applicant has THREE MONTHS FROM THE "MAILING DATE" of this communication to file a reply complying with the requirements noted below. Failure to timely comply will result in ABANDONMENT of this application.
THIS THREE-MONTH PERIOD IS NOT EXTENDABLE.

5. ☐ CORRECTED DRAWINGS (as "replacement sheets") must be submitted.
   ☐ including changes required by the attached Examiner's Amendment / Comment or in the Office action of Paper No./Mail Date _____ .

   Identifying indicia such as the application number (see 37 CFR 1.84(c)) should be written on the drawings in the front (not the back) of each sheet. Replacement sheet(s) should be labeled as such in the header according to 37 CFR 1.121(d).

6. ☐ DEPOSIT OF and/or INFORMATION about the deposit of BIOLOGICAL MATERIAL must be submitted. Note the attached Examiner's comment regarding REQUIREMENT FOR THE DEPOSIT OF BIOLOGICAL MATERIAL.

Attachment(s)

1. ☐ Notice of References Cited (PTO-892)
2. ☐ Information Disclosure Statements (PTO/SB/08), Paper No./Mail Date _____.
3. ☐ Examiner's Comment Regarding Requirement for Deposit of Biological Material _____.
4. ☐ Interview Summary (PTO-413), Paper No./Mail Date. _____.
5. ☐ Examiner's Amendment/Comment
6. ☑ Examiner's Statement of Reasons for Allowance
7. ☐ Other _____.

/AJAY ARORA/
Primary Examiner, Art Unit 2892

Greenthread Ex. 2071, p. 22 of 211
Semiconductor v. Greenthread
IPR2023-01244

DETAILED ACTION

Notice of Pre-AIA or AIA Status

1. The present application is being examined under the pre-AIA first to invent provisions.

Reasons for Allowance

2. Claims 1-30 are allowed. The following is an examiner's statement of reasons for allowance:

Claims 1-20 are allowed because the prior art of record does not teach or suggest, singularly or in combination, at least the limitations of the base claim 1 that requires "at least one well region adjacent to the first or second active region containing at least one graded dopant region, the graded dopant region to aid carrier movement from the surface towards the area of the substrate where there are no active regions" (see last 5 lines).

The closest reference is Hong (US 2007/0045682), hereinafter Hong. More specifically, regarding claim 17, Hong (refer to Figures 4A-4D and 5A-5C) teaches An electronic system, the system comprising:

a substrate (312 – see para 29) of a first doping type (i.e. parts 312 and 21 of the substrate have n-type doping, see para 29) of a first doping type and a first doping level having a surface;

a first region (311, which includes wells such as 21, 22, 5, 2) disposed adjacent the first surface,

a second active region (such as source/drain region 2, see para 40; or 2 or 5 or 22 of pixel cell formed in an adjacent region separated by shallow trench isolation 37 – see para 30) separate from the first region disposed adjacent to the first active region and within which transistors (406, 407) may be formed;

at least a portion of at least one of the first and second regions having at least one graded dopant concentration (350 – see para 24, last 3 sentences; also see Figure 5C and para 29) to aid carrier movement (para 26).

However, the first region is not an "active" region and the structure does not show that the graded dopant region is to "aid carrier movement from the surface to the area of the substrate where there are no active regions". Further, it is not obvious to modify Hong as changing first region and second region as above would change the intended function of the device.

Similarly, claims 21-30 are allowed because the prior art of record does not teach or suggest, singularly or in combination, at least the limitations of base claim 21 that requires "at least one well region adjacent to the first or second active region containing at least one graded dopant region, the graded dopant region to aid carrier movement from the surface to the area of the substrate where there are no active regions" (see last 5 lines). Again, the closest reference is Hong.

Any comments considered necessary by applicant must be submitted no later than the payment of the issue fee and, to avoid processing delays, should preferably accompany the issue fee. Such submissions should be clearly labeled "Comments on Statement of Reasons for Allowance."

Conclusion

3. Any inquiry concerning this communication or earlier communications from the examiner should be directed to AJAY ARORA whose telephone number is (571)272-8347. The examiner can normally be reached 9 AM - 5 PM.

Examiner interviews are available via telephone, in-person, and video conferencing using a USPTO supplied web-based collaboration tool. To schedule an interview, applicant is encouraged to use the USPTO Automated Interview Request (AIR) at http://www.uspto.gov/interviewpractice.

If attempts to reach the examiner by telephone are unsuccessful, the examiner's supervisor, Thao X. Le can be reached on 5712721708. The fax phone number for the organization where this application or proceeding is assigned is 571-273-8300.

Information regarding the status of published or unpublished applications may be obtained from Patent Center. Unpublished application information in Patent Center is available to registered users. To file and manage patent submissions in Patent Center, visit: https://patentcenter.uspto.gov. Visit https://www.uspto.gov/patents/apply/patent-center for more information about Patent Center and https://www.uspto.gov/patents/docx for information about filing in DOCX format. For additional questions, contact the Electronic Business Center (EBC) at 866-217-9197

(toll-free). If you would like assistance from a USPTO Customer Service

Representative, call 800-786-9199 (IN USA OR CANADA) or 571-272-1000.

/AJAY ARORA/
Primary Examiner, Art Unit 2892

Issue Classification	Application/Control No.	Applicant(s)/Patent Under Reexamination
	17/371,839	RAO, G.R. MOHAN
	Examiner	**Art Unit**
	AJAY ARORA	2892

CPC

Symbol					Type	Version
H01L	/	29	/	1095	F	2013-01-01
H01L	/	27	/	11524	I	2013-01-01
H01L	/	27	/	14643	I	2013-01-01
H01L	/	27	/	11521	I	2013-01-01
H01L	/	29	/	7395	I	2013-01-01
H01L	/	29	/	36	I	2013-01-01
H01L	/	27	/	0214	A	2013-01-01
H01L	/	27	/	10844	A	2013-01-01

CPC Combination Sets

Symbol					Type	Set	Ranking	Version
	/		/					

NONE (Assistant Examiner)	(Date)	**Total Claims Allowed:** 30	
/AJAY ARORA/ Primary Examiner, Art Unit 2892 (Primary Examiner)	08 March 2022 (Date)	O.G. Print Claim(s) 1	O.G. Print Figure 5b

U.S. Patent and Trademark Office

Part of Paper No.: 20220308

Greenthread Ex. 2071, p. 27 of 211
Semiconductor v. Greenthread
IPR2023-01244

Issue Classification	Application/Control No.	Applicant(s)/Patent Under Reexamination
	17/371,839	RAO, G.R. MOHAN
	Examiner	**Art Unit**
	AJAY ARORA	2892

INTERNATIONAL CLASSIFICATION				
CLAIMED				
H01L29/10	/	29	/	10

NON-CLAIMED				
	/		/	

US ORIGINAL CLASSIFICATION	
CLASS	**SUBCLASS**
257	25

CROSS REFERENCES(S)						
CLASS	**SUBCLASS (ONE SUBCLASS PER BLOCK)**					

NONE (Assistant Examiner)	(Date)	**Total Claims Allowed:** 30	
/AJAY ARORA/ Primary Examiner, Art Unit 2892 (Primary Examiner)	08 March 2022 (Date)	O.G. Print Claim(s) 1	O.G. Print Figure 5b

U.S. Patent and Trademark Office

Part of Paper No.: 20220308

Greenthread Ex. 2071, p. 28 of 211
Semiconductor v. Greenthread
IPR2023-01244

Issue Classification	Application/Control No.	Applicant(s)/Patent Under Reexamination
	17/371,839	RAO, G.R. MOHAN
	Examiner	**Art Unit**
	AJAY ARORA	2892

☑ Claims renumbered in the same order as presented by applicant ☐ CPA ☑ T.D. ☐ R.1.47

CLAIMS

Final	Original	Final	Original	Final	Original	Final	Original	Final	Original	Final	Original	Final	Original	Final	Original
	1		10		19		28								
	2		11		20		29								
	3		12		21		30								
	4		13		22										
	5		14		23										
	6		15		24										
	7		16		25										
	8		17		26										
	9		18		27										

NONE (Assistant Examiner)	(Date)	**Total Claims Allowed:** 30	
/AJAY ARORA/ Primary Examiner, Art Unit 2892 (Primary Examiner)	08 March 2022 (Date)	O.G. Print Claim(s) 1	O.G. Print Figure 5b

U.S. Patent and Trademark Office

Part of Paper No.: 20220308

Greenthread Ex. 2071, p. 29 of 211
Semiconductor v. Greenthread
IPR2023-01244

Search Notes	Application/Control No.	Applicant(s)/Patent Under Reexamination
	17/371,839	RAO, G.R. MOHAN
	Examiner	**Art Unit**
	AJAY ARORA	2892

CPC - Searched*		
Symbol	**Date**	**Examiner**
H01L 29/1095	10/23/2021	AKA

CPC Combination Sets - Searched*		
Symbol	**Date**	**Examiner**

US Classification - Searched*			
Class	**Subclass**	**Date**	**Examiner**
257	25	10/23/2021	AKA

* See search history printout included with this form or the SEARCH NOTES box below to determine the scope of the search.

Search Notes		
Search Notes	**Date**	**Examiner**
Inventor search	10/23/2021	AKA
Assignee search	10/23/2021	AKA
References for all parent applications (10/934,915; 11/622,496; 15/590,282; 16/717950 and 16/947294) considered	10/23/2021	AKA
.clm. interference search	10/23/2021	AKA
EAST search history report	10/23/2021	AKA
Revised EAST search history report	02/23/2022	AKA
Revised EAST search history report	03/08/2022	aka

/AJAY ARORA/ Primary Examiner, Art Unit 2892	

Greenthread Ex. 2071, p. 30 of 211
Semiconductor v. Greenthread
IPR2023-01244

Search Notes	Application/Control No.	Applicant(s)/Patent Under Reexamination
	17/371,839	RAO, G.R. MOHAN
	Examiner	**Art Unit**
	AJAY ARORA	2892

Interference Search			
US Class/CPC Symbol	**US Subclass/CPC Group**	**Date**	**Examiner**
H01L	29/1095	10/23/2021	AKA
257	25	10/23/2021	AKA

/AJAY ARORA/ Primary Examiner, Art Unit 2892	

Greenthread Ex. 2071, p. 31 of 211
Semiconductor v. Greenthread
IPR2023-01244

Index of Claims	Application/Control No.	Applicant(s)/Patent Under Reexamination
	17/371,839	RAO, G.R. MOHAN
	Examiner	**Art Unit**
	AJAY ARORA	2892

✓	Rejected	-	Cancelled	N	Non-Elected	A	Appeal
=	Allowed	÷	Restricted	I	Interference	O	Objected

CLAIMS

☑ Claims renumbered in the same order as presented by applicant ☐ CPA ☑ T.D. ☐ R.1.47

CLAIM		DATE								
Final	Original	10/23/2021	02/23/2022	03/08/2022						
	1	✓	✓	=						
	2	✓	✓	=						
	3	✓	✓	=						
	4	✓	✓	=						
	5	✓	✓	=						
	6	✓	✓	=						
	7	✓	✓	=						
	8	✓	✓	=						
	9	✓	✓	=						
	10	✓	✓	=						
	11	✓	✓	=						
	12	✓	✓	=						
	13	✓	✓	=						
	14	✓	✓	=						
	15	✓	✓	=						
	16	✓	✓	=						
	17	✓	✓	=						
	18	✓	✓	=						
	19	✓	✓	=						
	20	✓	✓	=						
	21	✓	✓	=						
	22	✓	✓	=						
	23	✓	✓	=						
	24	✓	✓	=						
	25	✓	✓	=						
	26	✓	✓	=						
	27	✓	✓	=						
	28	✓	✓	=						
	29	✓	✓	=						
	30	✓	✓	=						

OK TO ENTER: /A.A/

GRTD60-35314 PATENT

IN THE UNITED STATES PATENT AND TRADEMARK OFFICE

In re application of:	G. R. Mohan Rao
Serial No.:	17/371,839
Confirmation No.:	2197
Filed:	July 9, 2021
Group:	2892
Examiner:	Ajay Arora
For:	SEMICONDUCTOR DEVICES WITH GRADED DOPANT REGIONS

Mail Stop AMENDMENT
Commissioner for Patents
P.O. Box 1450
Alexandria, VA 22313-1450

Dear Sir:

AMENDMENT AND RESPONSE TO OFFICE ACTION

This communication is responsive to the Examiner's Office Action dated February 28, 2022. Reconsideration is respectfully requested.

Amendments to the Claims are reflected in the listing of claims beginning on page 2 of this paper. **Remarks/Arguments** begin on page 7 of this paper.

PE2E SEARCH - Search History (Prior Art)

Ref #	Hits	Search Query	DBs	Default Operator	Plurals	British Equivalents	Time Stamp
L1	0	17/371,839	(US-PGPUB; USPAT; USOCR; FPRS; EPO; JPO; DERWENT; IBM_TDB)	OR	OFF	OFF	2021/10/23 10:17 AM
L2	31	((("GREENTHREAD") near3 ("LLC"))).AS,AANM.	(US-PGPUB; USPAT; USOCR; FPRS; EPO; JPO; DERWENT; IBM_TDB)	OR	ON	ON	2021/10/23 10:18 AM
L3	29	((("RAO") near3 ("G.R") near3 ("MOHAN"))).INV.	(US-PGPUB; USPAT; USOCR; FPRS; EPO; JPO; DERWENT; IBM_TDB)	OR	ON	ON	2021/10/23 10:19 AM
L4	30065	H01L29/1095.cpc.	(US-PGPUB; USPAT; USOCR; FPRS; EPO; JPO; DERWENT; IBM_TDB)	OR	OFF	OFF	2021/10/23 10:19 AM
L5	669	(257/25).CCLS.	(US-PGPUB; USPAT; USOCR; FPRS; EPO; JPO; DERWENT; IBM_TDB)	OR	OFF	OFF	2021/10/23 10:19 AM
L6	56	("20010028097"|"20020195656"|"20030183856"|"20070045682"|"20080142899"|"20140034997"|"20170243876"|"4160985"|"4684971"|"4688063"|"4907058"|"4994987"|"5835402"|"6025237"|"6384431"|"6465862").PN.	(US-PGPUB; USPAT; USOCR; FPRS; EPO; JPO; DERWENT; IBM_TDB)	OR	ON	ON	2021/10/23 10:20 AM
L7	29	("5448087"|"5888857"|"20030030488"|"6720622"|"20030026126"|"5973575"|"5262345"|"20040027753").PN.	(US-PGPUB; USPAT; USOCR; FPRS; EPO; JPO; DERWENT; IBM_TDB)	OR	OFF	OFF	2021/10/23 10:20 AM
L8	12	(US-20040027753-$ or US-20030030488-$ or US-20140034997-$ or US-20060049464-$ or US-20030026126-$ or US-20070181927-$ or US-20070045682-$).did. or (US-5973575-$ or US-5262345-$ or US-5448087-$ or US-6720622-$ or US-5888857-$).did.	(US-PGPUB; USPAT)	OR	ON	ON	2021/10/23 10:21 AM
L9	47	("20020056883"|"20020084430"|"20020102783"|"20030042511"|"4160	(US-PGPUB; USPAT; USOCR; FPRS; EPO; JPO; DERWENT;	OR	OFF	OFF	2021/10/23 10:22 AM

Greenthread Ex. 2071, p. 34 of 211
Semiconductor v. Greenthread
IPR2023-01244

		985"|"5637898"|"5517052"|"4481522"|"6831292"|"20020093281"|"5029277"|"20060113592"|"20020134419").PN.	IBM_TDB)				
L10	118	("20020074585"|"5496746"|"6683343"|"6696314"|"6452086"|"6472715"|"6747883"|"5797999"|"6670544"|"20040063288"|"4347654"|"4866000"|"6744117"|"6754093"|"5213988"|"5569612"|"RE37441"|"4001864"|"6756616"|"5130262"|"5329144"|"6706550"|"6753202"|"5480816"|"6713813"|"6737722"|"5575862"|"6211028").PN.	(US-PGPUB; USPAT; USOCR; FPRS; EPO; JPO; DERWENT; IBM_TDB)	OR	OFF	OFF	2021/10/23 10:23 AM
L11	255	("20020102783"|"20030026126"|"20030030488"|"6211028"|"6310366"|"6753202"|"7115925"|"8164124"|"6878603"|"20020056883"|"20020093281"|"20150200314"|"4347654"|"5496746"|"6452086"|"6737722"|"6747883"|"6780713"|"20030042511"|"5029277"|"5888857"|"6670544"|"6706550"|"6713813"|"6921943"|"7504692"|"20040027753"|"4160985"|"5448087"|"6472715"|"6683343"|"6831292"|"7307327"|"5569612"|"5575862"|"5637898"|"6720622"|"6744117"|"20070045682"|"20020134419"|"20060113592"|"20130001661"|"4481522"|"5262345"|"6756616"|"6933215"|"7233044"|"20010040622"|"20020074585"|"5130262"|"5213988"|"5329144"|"6465862"|"6696314"|"RE37441"|"20020084430"|"4001864"|"4866000"|"5480816"|"5517052"|"5797999"|"5973575"|"6754093"|"7064385"|"20120048462").PN.	(US-PGPUB; USPAT; USOCR; FPRS; EPO; JPO; DERWENT; IBM_TDB)	OR	OFF	OFF	2021/10/23 10:58 AM
L12	271	("20020102783"|"20020134419"|"20070045682"|"6310366"|"RE37441"|	(US-PGPUB; USPAT; USOCR; FPRS; EPO; JPO; DERWENT;	OR	OFF	OFF	2021/10/23 10:59 AM

		"20040027753"|"20120048462"|"4160985"|"4347654"|"5213988"|"5575862"|"8164124"|"20130001661"|"5329144"|"5496746"|"5569612"|"5637898"|"5973575"|"6211028"|"6683343"|"6696314"|"6713813"|"6754093"|"7064385"|"20030030488"|"20070045682"|"4481522"|"6753202"|"20020056883"|"20020084430"|"20020093281"|"20030026126"|"20030042511"|"4001864"|"5130262"|"5262345"|"5448087"|"6472715"|"6670544"|"6720622"|"6780713"|"6921946"|"10510842"|"20010040622"|"20020074585"|"6465862"|"6747883"|"7233044"|"7307327"|"20030030488"|"20040063288"|"20060113592"|"20150200314"|"4866000"|"5029277"|"5480816"|"5517052"|"5797999"|"6452086"|"6706550"|"6737722"|"6831292"|"6878603"|"7115925"|"9190502"|"9647070"|"5888857"|"6744117"|"6756616"|"6933215"|"7504692"|"8421195").PN.	IBM_TDB)				
L13	316	("20020102783"|"20020134419"|"20070045682"|"6310366"|"RE37441"|"4907058"|"20040027753"|"20080142899"|"20120048462"|"4160985"|"4347654"|"5213988"|"5575862"|"8164124"|"20010028097"|"4994887"|"6025237"|"20130001661"|"5329144"|"5496746"|"5569612"|"5637898"|"5973575"|"6211028"|"6683343"|"6696314"|"6713813"|"6754093"|"7064385"|"20140034997"|"10734481"|"4481522"|"6753202"|"20020195656"|"20030183856"|"20020056883"|"20020084430"|"20020093281"|"20030026126"|"20030042	(US-PGPUB; USPAT; USOCR; FPRS; EPO; JPO; DERWENT; IBM_TDB)	OR	OFF	OFF	2021/10/23 11:00 AM

Greenthread Ex. 2071, p. 36 of 211
Semiconductor v. Greenthread
IPR2023-01244

		511"|"4001864"|"5130262"|"5262345"|"5448087"|"6472715"|"6670544"|"6720622"|"6780713"|"6921946"|"20170243876"|"5835402"|"20070045682"|"10510842"|"20010040622"|"20020074585"|"20030183856"|"4684971"|"6465862"|"6747883"|"7233044"|"7307327"|"4688063"|"20030030488"|"20040063288"|"20060113592"|"20150200314"|"4866000"|"5029277"|"5480816"|"5517052"|"5797999"|"6452086"|"6706550"|"6737722"|"6831292"|"6878603"|"7115925"|"9190502"|"9647070"|"20080142899"|"6384431"|"5888857"|"6744117"|"6756616"|"6933215"|"7504692"|"8421195").PN.					
L14	319	L7 L9 L10 L11 L12 L13	(US-PGPUB; USPAT; USOCR; FPRS; EPO; JPO; DERWENT; IBM_TDB)	OR	OFF	OFF	2021/10/23 11:01 AM
L15	10	L3 and drift	(US-PGPUB; USPAT; USOCR; FPRS; EPO; JPO; DERWENT; IBM_TDB)	OR	OFF	OFF	2021/10/23 11:02 AM
L16	14	L2 and drift	(US-PGPUB; USPAT; USOCR; FPRS; EPO; JPO; DERWENT; IBM_TDB)	OR	OFF	OFF	2021/10/23 11:02 AM
L17	574	(source drain source/drain) and drift and ((gradient graded) near2 concentration near2 dop$3) and well	(US-PGPUB; USPAT; USOCR; FPRS; EPO; JPO; DERWENT; IBM_TDB)	OR	OFF	OFF	2021/10/23 11:03 AM
L18	25930	H01L27/11521.cpc.	(US-PGPUB; USPAT; USOCR; FPRS; EPO; JPO; DERWENT; IBM_TDB)	OR	ON	ON	2021/10/23 11:03 AM
L19	14669	H01L27/11524.cpc.	(US-PGPUB; USPAT; USOCR; FPRS; EPO; JPO; DERWENT; IBM_TDB)	OR	ON	ON	2021/10/23 11:04 AM
L20	29711	H01L27/14643.cpc.	(US-PGPUB; USPAT; USOCR; FPRS; EPO; JPO; DERWENT; IBM_TDB)	OR	ON	ON	2021/10/23 11:04 AM
L21	11836	H01L29/36.cpc.	(US-PGPUB; USPAT;	OR	ON	ON	2021/10/23

Greenthread Ex. 2071, p. 37 of 211
Semiconductor v. Greenthread
IPR2023-01244

			USOCR; FPRS; EPO; JPO; DERWENT; IBM_TDB)				11:04 AM
L22	13097	H01L29/7395.cpc.	(US-PGPUB; USPAT; USOCR; FPRS; EPO; JPO; DERWENT; IBM_TDB)	OR	ON	ON	2021/10/23 11:04 AM
L23	18	L4 and L18 and L21	(US-PGPUB; USPAT; USOCR; FPRS; EPO; JPO; DERWENT; IBM_TDB)	OR	ON	ON	2021/10/23 11:08 AM
L24	18	L4 and L18 and L20	(US-PGPUB; USPAT; USOCR; FPRS; EPO; JPO; DERWENT; IBM_TDB)	OR	ON	ON	2021/10/23 11:10 AM
L25	18	L4 and L19 and L20	(US-PGPUB; USPAT; USOCR; FPRS; EPO; JPO; DERWENT; IBM_TDB)	OR	ON	ON	2021/10/23 11:10 AM
L26	66	L4 and L19 and L21	(US-PGPUB; USPAT; USOCR; FPRS; EPO; JPO; DERWENT; IBM_TDB)	OR	ON	ON	2021/10/23 11:10 AM
L27	2	((source drain "source/drain" active) and drift and ((gradient graded) near2 concentration near2 dop$3) and well and ((no near2 active) (inactive))).clm.	(US-PGPUB; USPAT; USOCR; FPRS; EPO; JPO; DERWENT; IBM_TDB)	OR	OFF	OFF	2021/10/23 11:11 AM
L28	32	((source drain "source/drain" active) and drift and ((gradient graded) near2 concentration near2 dop$3) and well and ((no near2 active) (inactive)))	(US-PGPUB; USPAT; USOCR; FPRS; EPO; JPO; DERWENT; IBM_TDB)	OR	OFF	OFF	2021/10/23 11:13 AM
L30	574	(source drain source/drain) and drift and ((gradient graded) near2 concentration near2 dop$3) and well	(US-PGPUB; USPAT; USOCR; FPRS; EPO; JPO; DERWENT; IBM_TDB)	OR	OFF	OFF	2021/10/23 03:37 PM
L31	574	L30	(US-PGPUB; USPAT; USOCR; FPRS; EPO; JPO; DERWENT; IBM_TDB)	OR	OFF	OFF	2021/10/23 03:37 PM
L32	1	("9647070").PN.	(US-PGPUB; USPAT)	OR	OFF	OFF	2021/10/23 04:21 PM
L33	1	("6384431").PN.	(US-PGPUB; USPAT)	OR	OFF	OFF	2021/10/23 04:21 PM
L34	3	16/947,294	(US-PGPUB; USPAT; USOCR; FIT (AU, AP,	OR	ON	ON	2022/02/23 11:02 PM

Greenthread Ex. 2071, p. 38 of 211
Semiconductor v. Greenthread
IPR2023-01244

			AT, BE, BG, BR, BY, CA, CH, CN, CS, CU, CZ, DD, DE, DK, EA, EE, EP, ES, FI, FR, GB, HR, HU, ID, IE, IL, IS, IT, JP, KR, LT, LU, LV, MA, OA, RU, SU, WO, MC, MD, MY, NL, NO, NZ, PH, PL, PT, RO, RS, SE, SG, SI, SK, TH, TN, TR, TW, UA, VN); FPRS; EPO; JPO; DERWENT; IBM_TDB)				
L35	544	(source drain source$1drain) AND drift AND ((gradient graded) near2 concentration near2 dop$3) AND well	(US-PGPUB; USPAT; USOCR; FPRS; EPO; JPO; DERWENT; IBM_TDB)	OR	OFF	OFF	2022/02/23 11:22 PM
L36	1	"11121222"	(USPAT)	OR	ON	ON	2022/03/08 09:28 PM

PE2E SEARCH - Search History (Interference)

Ref #	Hits	Search Query	DBs	Default Operator	Plurals	British Equivalents	Time Stamp
N29	31	((source drain "source/drain" active) and drift and ((gradient graded) near2 concentration near2 dop$3) and well and ((no near2 active) (inactive)))	(US-PGPUB; USPAT)	OR	OFF	OFF	2021/10/23 11:12 AM

Bibliographic Data

Application No: 17/371,839

Foreign Priority claimed: ○ Yes ◉ No

35 USC 119 (a-d) conditions met: ☐ Yes ☑ No ☐ Met After Allowance

Verified and Acknowledged: /AJAY ARORA/ (Examiner's Signature) | Initials

Title: SEMICONDUCTOR DEVICES WITH GRADED DOPANT REGIONS

FILING or 371(c) DATE	CLASS	GROUP ART UNIT	ATTORNEY DOCKET NO.
07/09/2021	257	2892	GRTD60-35314
RULE			

APPLICANTS

GREENTHREAD, LLC, Dallas, TX, UNITED STATES

INVENTORS

G.R. MOHAN RAO, ALLEN, TX, UNITED STATES

CONTINUING DATA

This application is a CON of 16947294 07/27/2020 PAT 11121222

16947294 is a CON of 16717950 12/17/2019 PAT 10734481

16717950 is a CON of 15590282 05/09/2017 PAT 10510842

15590282 is a CON of 14931636 11/03/2015 PAT 9647070

14931636 is a CON of 14515584 10/16/2014 PAT 9190502

14515584 is a CON of 13854319 04/01/2013ABN

13854319 is a CON of 11622496 01/12/2007 PAT 8421195

11622496 is a DIV of 10934915 09/03/2004ABN

FOREIGN APPLICATIONS

IF REQUIRED, FOREIGN LICENSE GRANTED**

07/22/2021

STATE OR COUNTRY

UNITED STATES

ADDRESS

MUNCK WILSON MANDALA L.L.P
P.O. Drawer 800889
DALLAS, TX 75380
UNITED STATES

FILING FEE RECEIVED

$7,160

Doc Code: DIST.E.FILE **Document Description: Electronic Terminal Disclaimer - Filed**	PTO/SB/26 U.S. Patent and Trademark Office Department of Commerce

Electronic Petition Request	**TERMINAL DISCLAIMER TO OBVIATE A DOUBLE PATENTING REJECTION OVER A "PRIOR" PATENT**
Application Number	17371839
Filing Date	09-Jul-2021
First Named Inventor	G.R. MOHAN RAO
Attorney Docket Number	GRTD60-35314
Title of Invention	SEMICONDUCTOR DEVICES WITH GRADED DOPANT REGIONS

☒ Filing of terminal disclaimer does not obviate requirement for response under 37 CFR 1.111 to outstanding Office Action

☒ This electronic Terminal Disclaimer is not being used for a Joint Research Agreement.

Owner	Percent Interest
GREENTHREAD, LLC	100%

The owner(s) with percent interest listed above in the instant application hereby disclaims, except as provided below, the terminal part of the statutory term of any patent granted on the instant application which would extend beyond the expiration date of the full statutory term of prior patent number(s)

11121222

as the term of said prior patent is presently shortened by any terminal disclaimer. The owner hereby agrees that any patent so granted on the instant application shall be enforceable only for and during such period that it and the prior patent are commonly owned. This agreement runs with any patent granted on the instant application and is binding upon the grantee, its successors or assigns.

In making the above disclaimer, the owner does not disclaim the terminal part of the term of any patent granted on the instant application that would extend to the expiration date of the full statutory term of the prior patent, "as the term of said prior patent is presently shortened by any terminal disclaimer," in the event that said prior patent later:
- expires for failure to pay a maintenance fee;
- is held unenforceable;
- is found invalid by a court of competent jurisdiction;
- is statutorily disclaimed in whole or terminally disclaimed under 37 CFR 1.321;
- has all claims canceled by a reexamination certificate;
- is reissued; or
- is in any manner terminated prior to the expiration of its full statutory term as presently shortened by any terminal disclaimer.

◉ Terminal disclaimer fee under 37 CFR 1.20(d) is included with Electronic Terminal Disclaimer request.

○ I certify, in accordance with 37 CFR 1.4(d)(4), that the terminal disclaimer fee under 37 CFR 1.20(d) required for this terminal disclaimer has already been paid in the above-identified application.

Applicant claims the following fee status:

○ Small Entity

○ Micro Entity

◉ Regular Undiscounted

I hereby declare that all statements made herein of my own knowledge are true and that all statements made on information and belief are believed to be true; and further that these statements were made with the knowledge that willful false statements and the like so made are punishable by fine or imprisonment, or both, under Section 1001 of Title 18 of the United States Code and that such willful false statements may jeopardize the validity of the application or any patent issued thereon.

THIS PORTION MUST BE COMPLETED BY THE SIGNATORY OR SIGNATORIES

I certify, in accordance with 37 CFR 1.4(d)(4) that I am:

◉ An attorney or agent registered to practice before the Patent and Trademark Office who is of record in this application

Registration Number 30646

○ A sole inventor

○ A joint inventor; I certify that I am authorized to sign this submission on behalf of all of the inventors as evidenced by the power of attorney in the application

○ A joint inventor; all of whom are signing this request

Signature	/Gregory M. Howison, Reg. #30646/
Name	Gregory M. Howison

*Statement under 37 CFR 3.73(b) is required if terminal disclaimer is signed by the assignee (owner).
Form PTO/SB/96 may be used for making this certification. See MPEP § 324.

Electronic Patent Application Fee Transmittal

Application Number:	17371839
Filing Date:	09-Jul-2021
Title of Invention:	SEMICONDUCTOR DEVICES WITH GRADED DOPANT REGIONS
First Named Inventor/Applicant Name:	G.R. MOHAN RAO
Filer:	Gregory Michael Howison/Joselyn Rodriguez
Attorney Docket Number:	GRTD60-35314

Filed as Large Entity

Filing Fees for Utility under 35 USC 111(a)

Description	Fee Code	Quantity	Amount	Sub-Total in USD($)
Basic Filing:				
STATUTORY OR TERMINAL DISCLAIMER	1814	1	170	170
Pages:				
Claims:				
Miscellaneous-Filing:				
Petition:				
Patent-Appeals-and-Interference:				
Post-Allowance-and-Post-Issuance:				

Description	Fee Code	Quantity	Amount	Sub-Total in USD($)
Extension-of-Time:				
Miscellaneous:				
			Total in USD ($)	**170**

Doc Code: DISQ.E.FILE
Document Description: Electronic Terminal Disclaimer – Approved

Application No.: 17371839

Filing Date: 09-Jul-2021

Applicant/Patent under Reexamination: RAO

Electronic Terminal Disclaimer filed on March 15, 2022

☒ APPROVED

This patent is subject to a terminal disclaimer

☐ DISAPPROVED

Approved/Disapproved by: Electronic Terminal Disclaimer automatically approved by EFS-Web

U.S. Patent and Trademark Office

Electronic Acknowledgement Receipt

EFS ID:	45218088
Application Number:	17371839
International Application Number:	
Confirmation Number:	2197
Title of Invention:	SEMICONDUCTOR DEVICES WITH GRADED DOPANT REGIONS
First Named Inventor/Applicant Name:	G.R. MOHAN RAO
Customer Number:	25883
Filer:	Gregory Michael Howison/Joselyn Rodriguez
Filer Authorized By:	Gregory Michael Howison
Attorney Docket Number:	GRTD60-35314
Receipt Date:	15-MAR-2022
Filing Date:	09-JUL-2021
Time Stamp:	15:55:28
Application Type:	Utility under 35 USC 111(a)

Payment information:

Submitted with Payment	yes
Payment Type	DA
Payment was successfully received in RAM	$170
RAM confirmation Number	E20223EF55242618
Deposit Account	500208
Authorized User	Joselyn Rodriguez

The Director of the USPTO is hereby authorized to charge indicated fees and credit any overpayment as follows:

37 CFR 1.17 (Patent application and reexamination processing fees)

37 CFR 1.21 (Miscellaneous fees and charges)

File Listing:

Document Number	Document Description	File Name	File Size(Bytes)/ Message Digest	Multi Part /.zip	Pages (if appl.)
1	Terminal Disclaimer-Filed (Electronic)	eTerminal-Disclaimer.pdf	41407 ce154e2964899d218ef9dae5a3347ca4e03ea568	no	2
Warnings:					
Information:					
2	Fee Worksheet (SB06)	fee-info.pdf	38134 3ae58ae3a199f0bc9be08814725ee818db80dd20	no	2
Warnings:					
Information:					
		Total Files Size (in bytes):	79541		

This Acknowledgement Receipt evidences receipt on the noted date by the USPTO of the indicated documents, characterized by the applicant, and including page counts, where applicable. It serves as evidence of receipt similar to a Post Card, as described in MPEP 503.

<u>New Applications Under 35 U.S.C. 111</u>
If a new application is being filed and the application includes the necessary components for a filing date (see 37 CFR 1.53(b)-(d) and MPEP 506), a Filing Receipt (37 CFR 1.54) will be issued in due course and the date shown on this Acknowledgement Receipt will establish the filing date of the application.
<u>National Stage of an International Application under 35 U.S.C. 371</u>
If a timely submission to enter the national stage of an international application is compliant with the conditions of 35 U.S.C. 371 and other applicable requirements a Form PCT/DO/EO/903 indicating acceptance of the application as a national stage submission under 35 U.S.C. 371 will be issued in addition to the Filing Receipt, in due course.
<u>New International Application Filed with the USPTO as a Receiving Office</u>
If a new international application is being filed and the international application includes the necessary components for an international filing date (see PCT Article 11 and MPEP 1810), a Notification of the International Application Number and of the International Filing Date (Form PCT/RO/105) will be issued in due course, subject to prescriptions concerning national security, and the date shown on this Acknowledgement Receipt will establish the international filing date of the application.

PTO/SB/06 (09-11)
Approved for use through 1/31/2014. OMB 0651-0032
U.S. Patent and Trademark Office; U.S. DEPARTMENT OF COMMERCE
Under the Paperwork Reduction Act of 1995, no persons are required to respond to a collection of information unless it displays a valid OMB control number.

PATENT APPLICATION FEE DETERMINATION RECORD

Substitute for Form PTO-875

Application or Docket Number	Filing Date	
17/371,839	07/09/2021	☐ To be Mailed

ENTITY: ☑ LARGE ☐ SMALL ☐ MICRO

APPLICATION AS FILED - PART I

FOR	(Column 1) NUMBER FILED	(Column 2) NUMBER EXTRA		RATE ($)	FEE ($)
☐ BASIC FEE (37 CFR 1.16(a), (b), or (c))	N/A	N/A		N/A	
☐ SEARCH FEE (37 CFR 1.16(k), (i), or (m))	N/A	N/A		N/A	
☐ EXAMINATION FEE (37 CFR 1.16(o), (p), or (q))	N/A	N/A		N/A	
TOTAL CLAIMS (37 CFR 1.16(i))	minus 20 =	*		x $100 =	
INDEPENDENT CLAIMS (37 CFR 1.16(h))	minus 3 =	*		x $480 =	
☐ APPLICATION SIZE FEE (37 CFR 1.16(s))	If the specification and drawings exceed 100 sheets of paper, the application size fee due is $310 ($155 for small entity) for each additional 50 sheets or fraction thereof. See 35 U.S.C. 41(a)(1)(G) and 37 CFR 1.16(s).				
☐ MULTIPLE DEPENDENT CLAIM PRESENT (37 CFR 1.16(j))					
* If the difference in column 1 is less than zero, enter "0" in column 2.				TOTAL	

APPLICATION AS AMENDED - PART II

AMENDMENT	03/04/2022	(Column 1) CLAIMS REMAINING AFTER AMENDMENT		(Column 2) HIGHEST NUMBER PREVIOUSLY PAID FOR	(Column 3) PRESENT EXTRA		RATE ($)	ADDITIONAL FEE ($)
	Total (37 CFR 1.16(i))	* 30	Minus	** 30	= 0		x $100 =	0
	Independent (37 CFR 1.16(h))	* 2	Minus	*** 3	= 0		x $480 =	0
	☐ Application Size Fee (37 CFR 1.16(s))							
	☐ FIRST PRESENTATION OF MULTIPLE DEPENDENT CLAIM (37 CFR 1.16(j))							
							TOTAL ADD'L FEE	0

AMENDMENT		(Column 1) CLAIMS REMAINING AFTER AMENDMENT		(Column 2) HIGHEST NUMBER PREVIOUSLY PAID FOR	(Column 3) PRESENT EXTRA		RATE ($)	ADDITIONAL FEE ($)
	Total (37 CFR 1.16(i))	*	Minus	**	=		x $0 =	
	Independent (37 CFR 1.16(h))	*	Minus	***	=		x $0 =	
	☐ Application Size Fee (37 CFR 1.16(s))							
	☐ FIRST PRESENTATION OF MULTIPLE DEPENDENT CLAIM (37 CFR 1.16(j))							
							TOTAL ADD'L FEE	

* If the entry in column 1 is less than the entry in column 2, write "0" in column 3.	LIE
** If the "Highest Number Previously Paid For" IN THIS SPACE is less than 20, enter "20".	/THERESA D DAWKINS/
*** If the "Highest Number Previously Paid For" IN THIS SPACE is less than 3, enter "3".	
The "Highest Number Previously Paid For" (Total or Independent) is the highest number found in the appropriate box in column 1.	

This collection of information is required by 37 CFR 1.16. The information is required to obtain or retain a benefit by the public which is to file (and by the USPTO to process) an application. Confidentiality is governed by 35 U.S.C. 122 and 37 CFR 1.14. This collection is estimated to take 12 minutes to complete, including gathering, preparing, and submitting the completed application form to the USPTO. Time will vary depending upon the individual case. Any comments on the amount of time you require to complete this form and/or suggestions for reducing this burden, should be sent to the Chief Information Officer, U.S. Patent and Trademark Office, U.S. Department of Commerce, P.O. Box 1450, Alexandria, VA 22313-1450. DO NOT SEND FEES OR COMPLETED FORMS TO THIS ADDRESS. **SEND TO: Commissioner for Patents, P.O. Box 1450, Alexandria, VA 22313-1450.**

If you need assistance in completing the form, call 1-800-PTO-9199 and select option 2.

IN THE UNITED STATES PATENT AND TRADEMARK OFFICE

In re application of:	G. R. Mohan Rao
Serial No.:	17/371,839
Confirmation No.:	2197
Filed:	July 9, 2021
Group:	2892
Examiner:	Ajay Arora
For:	SEMICONDUCTOR DEVICES WITH GRADED DOPANT REGIONS

Mail Stop AMENDMENT
Commissioner for Patents
P.O. Box 1450
Alexandria, VA 22313-1450

Dear Sir:

AMENDMENT AND RESPONSE TO OFFICE ACTION

This communication is responsive to the Examiner's Office Action dated February 28, 2022. Reconsideration is respectfully requested.

Amendments to the Claims are reflected in the listing of claims beginning on page 2 of this paper. **Remarks/Arguments** begin on page 7 of this paper.

In the Claims

This listing of claims will replace all prior versions, and listings, of claims in the application:

1. (Previously Presented) An electronic system, the system comprising:

at least one semiconductor device, the at least one semiconductor device including:

a substrate of a first doping type at a first doping level having a surface;

a first active region disposed adjacent the surface with a second doping type opposite in conductivity to the first doping type and within which transistors can be formed;

a second active region separate from the first active region disposed adjacent to the first active region and within which transistors can be formed;

transistors formed in at least one of the first active region or second active region;

at least a portion of at least one of the first and second active regions having at least one graded dopant concentration to aid carrier movement from the first and second active regions towards an area of the substrate where there are no active regions; and

at least one well region adjacent to the first or second active region containing at least one graded dopant region, the graded dopant region to aid carrier movement from the surface towards the area of the substrate where there are no active regions, wherein at least some of the transistors form digital logic of the semiconductor device.

2. (Previously Presented) The system of Claim 1, wherein the substrate of the at least one semiconductor device is a p-type substrate.

3. (Previously Presented) The system of Claim 1, wherein the substrate of the at least one semiconductor device has epitaxial silicon on top of a nonepitaxial substrate.

4. (Previously Presented) The system of Claim 1, wherein the first active region and second active region of the at least one semiconductor device contain digital logic formed by one of either p-channel and n-channel devices.

5. (Previously Presented) The system of Claim 1, wherein the first active region and second active region of the at least one semiconductor device contain either p-channel or n-channel devices in n-wells or p-wells, respectively, and each well has at least one graded dopant.

6. (Previously Presented) The system of Claim 1, wherein the first active region and second active region of the at least one semiconductor device are each separated by at least one isolation region.

7. (Previously Presented) The system of Claim 1, wherein the graded dopant is fabricated with an ion implantation process.

8. (Previously Presented) The system of Claim 1, wherein the first and second active regions of the at least one semiconductor device are formed adjacent the first surface of the substrate of the at least one semiconductor device.

9. (Previously Presented) The system of Claim 1, wherein dopants of the graded dopant concentration in the first active region or the second active region of the at least one semiconductor device are either p-type or n-type.

10. (Previously Presented) The system of Claim 1, wherein dopants of the graded dopant concentration in the first active region of the at least one semiconductor device are both p-type and n-type.

11. (Previously Presented) The system of Claim 1, wherein dopants of the graded dopant concentration in the second active region of the at least one semiconductor device are both p-type and n-type.

12. (Previously Presented) The system of Claim 1, wherein dopants of the graded dopant region in the well region of the at least one semiconductor device are both p-type and n-type.

13. (Previously Presented) The system of claim 1, wherein the transistors which can be formed in the first and second active regions of the at least one semiconductor device are CMOS digital logic transistors requiring at least a source, a drain, a gate and a channel.

14. (Previously Presented) The system of Claim 1, wherein the at least one semiconductor device is a dynamic random access memory (DRAM).

15. (Previously Presented) The system of Claim 1, wherein the at least one semiconductor device is a complementary metal oxide semiconductor (CMOS) with a nonepitaxial substrate.

16. (Previously Presented) The system of Claim 1, wherein the at least one semiconductor device is a flash memory.

17. (Previously Presented) The system of Claim 1, wherein the at least one semiconductor device comprises digital logic and capacitors.

18. (Previously Presented) The system of Claim 1, wherein the at least one semiconductor device is a central processing unit.

19. (Previously Presented) The system of Claim 1, wherein the at least one semiconductor device is an image sensor.

20. (Previously Presented) The system of Claim 1, wherein each of the first and second active regions of the at least one semiconductor device are in the lateral or vertical direction.

21. (Previously Presented) An electronic system, comprising:

at least one semiconductor device, the at least one semiconductor device including:

a substrate of a first doping type at a first doping level having a surface;

a first active region disposed adjacent the surface of the substrate with a second doping type opposite in conductivity to the first doping type and within which transistors can be formed in the surface thereof;

a second active region separate from the first active region disposed adjacent to the first active region and within which transistors can be formed in the surface thereof;

transistors formed in at least one of the first active region or second active region;

at least a portion of at least one of the first and second active regions having at least one graded dopant concentration to aid carrier movement from the surface to an area of the substrate where there are no active regions; and

at least one well region adjacent to the first or second active region containing at least one graded dopant region, the graded dopant region to aid carrier movement from the surface to the area of the substrate where there are no active regions, and wherein the graded dopant concentration is linear, quasilinear, error function, complementary error function, or any combination thereof.

22. (Previously Presented) The system of Claim 21, wherein the substrate of the at least one semiconductor device is an n-type substrate.

23. (Previously Presented) The system of Claim 21, wherein the substrate of the at least one semiconductor device is a p-type substrate.

24. (Previously Presented) The system of Claim 21, wherein the substrate of the at least one semiconductor device has epitaxial silicon on top of a nonepitaxial substrate.

25. (Previously Presented) The system of Claim 21, wherein the first active region and second active region of the at least one semiconductor device contain at least one of either p-channel and n-channel devices.

26. (Previously Presented) The system of Claim 21, wherein the first active region and second active region of the at least one semiconductor device contain either p-channel or n-channel devices in n-wells or p-wells, respectively, and each well has at least one graded dopant.

27. (Previously Presented) The system of Claim 21, wherein the first active region and second active region of the at least one semiconductor device are each separated by at least one isolation region.

28. (Previously Presented) The system of Claim 21, wherein dopants of the graded dopant concentration in the first active region or the second active region of the at least one semiconductor device are either p-type or n-type.

29. (Previously Presented) The system of Claim 21, wherein dopants of the graded dopant concentration in the first active region of the at least one semiconductor device are both p-type and n-type.

30. (Previously Presented) The system of Claim 21, wherein dopants of the graded dopant concentration in the second active region of the at least one semiconductor device are both p-type and n-type.

REMARKS

Applicant has carefully reviewed the Office Action dated February 28, 2022. Reconsideration and favorable action is respectfully requested.

Claims 1-30 are rejected on the ground of nonstatutory obviousness-type double patenting as being unpatentable over claims 1-30 of U.S. Patent No. 11121222. A Terminal Disclaimer is submitted concurrently with this response with respect to U.S. Patent No. 11121222.

Applicant has now made an earnest attempt in order to place this case in condition for allowance. For the reasons stated above, Applicant respectfully requests full allowance of the claims as amended.

If any issues arise, or if the Examiner has any suggestions for expediting allowance of this Application, the Applicant respectfully invites the Examiner to contact the undersigned at the telephone number indicated below or at whowison@munckwilson.com.

Recognizing that Internet communications are not secure, Applicant hereby authorizes the USPTO to communicate with the undersigned and practitioners in accordance with 37 CFR 1.33 and 37 CFR 1.34 concerning any subject matter of this application by video conferencing, instant messaging, or electronic mail. Applicant understands that a copy of these communications will be made of record in the application file.

Please charge any additional fees or deficiencies in fees or credit any overpayment to Deposit Account No. 50-0208/GRTD60-35314.

Respectfully submitted,
MUNCK WILSON MANDALA, LLP
Attorneys for Applicant

/William G. Howison, Reg. #66850/

William G. Howison
Registration No. 66,850

WGH/als

P.O. Drawer 800889
Dallas, Texas 75380
Tel: 972-628-3600
Fax: 972-628-3616
March 4, 2022

Electronic Acknowledgement Receipt

EFS ID:	45143918
Application Number:	17371839
International Application Number:	
Confirmation Number:	2197
Title of Invention:	SEMICONDUCTOR DEVICES WITH GRADED DOPANT REGIONS
First Named Inventor/Applicant Name:	G.R. MOHAN RAO
Customer Number:	25883
Filer:	William G. Howison
Filer Authorized By:	
Attorney Docket Number:	GRTD60-35314
Receipt Date:	04-MAR-2022
Filing Date:	09-JUL-2021
Time Stamp:	12:32:31
Application Type:	Utility under 35 USC 111(a)

Payment information:

Submitted with Payment	no

File Listing:

Document Number	Document Description	File Name	File Size(Bytes)/ Message Digest	Multi Part /.zip	Pages (if appl.)
1		GRT35314AMD.pdf	104672 b7e71d2fc480d3afb876e1eed26332baeb2bb3e6	yes	8

	Multipart Description/PDF files in .zip description		
	Document Description	**Start**	**End**
	Response After Final Action	1	1
	Claims	2	6
	Applicant Arguments/Remarks Made in an Amendment	7	8
Warnings:			
Information:			
	Total Files Size (in bytes):	104672	

This Acknowledgement Receipt evidences receipt on the noted date by the USPTO of the indicated documents, characterized by the applicant, and including page counts, where applicable. It serves as evidence of receipt similar to a Post Card, as described in MPEP 503.

<u>New Applications Under 35 U.S.C. 111</u>
If a new application is being filed and the application includes the necessary components for a filing date (see 37 CFR 1.53(b)-(d) and MPEP 506), a Filing Receipt (37 CFR 1.54) will be issued in due course and the date shown on this Acknowledgement Receipt will establish the filing date of the application.
<u>National Stage of an International Application under 35 U.S.C. 371</u>
If a timely submission to enter the national stage of an international application is compliant with the conditions of 35 U.S.C. 371 and other applicable requirements a Form PCT/DO/EO/903 indicating acceptance of the application as a national stage submission under 35 U.S.C. 371 will be issued in addition to the Filing Receipt, in due course.
<u>New International Application Filed with the USPTO as a Receiving Office</u>
If a new international application is being filed and the international application includes the necessary components for an international filing date (see PCT Article 11 and MPEP 1810), a Notification of the International Application Number and of the International Filing Date (Form PCT/RO/105) will be issued in due course, subject to prescriptions concerning national security, and the date shown on this Acknowledgement Receipt will establish the international filing date of the application.

Doc Code: DIST.E.FILE **Document Description: Electronic Terminal Disclaimer - Filed**	PTO/SB/26 U.S. Patent and Trademark Office Department of Commerce

Electronic Petition Request	**TERMINAL DISCLAIMER TO OBVIATE A DOUBLE PATENTING REJECTION OVER A "PRIOR" PATENT**
Application Number	17371839
Filing Date	09-Jul-2021
First Named Inventor	G.R. MOHAN RAO
Attorney Docket Number	GRTD60-35314
Title of Invention	SEMICONDUCTOR DEVICES WITH GRADED DOPANT REGIONS

☒ Filing of terminal disclaimer does not obviate requirement for response under 37 CFR 1.111 to outstanding Office Action

☒ This electronic Terminal Disclaimer is not being used for a Joint Research Agreement.

Owner	Percent Interest
VERVAIN, LLC	100%

The owner(s) with percent interest listed above in the instant application hereby disclaims, except as provided below, the terminal part of the statutory term of any patent granted on the instant application which would extend beyond the expiration date of the full statutory term of prior patent number(s)

11121222

as the term of said prior patent is presently shortened by any terminal disclaimer. The owner hereby agrees that any patent so granted on the instant application shall be enforceable only for and during such period that it and the prior patent are commonly owned. This agreement runs with any patent granted on the instant application and is binding upon the grantee, its successors or assigns.

In making the above disclaimer, the owner does not disclaim the terminal part of the term of any patent granted on the instant application that would extend to the expiration date of the full statutory term of the prior patent, "as the term of said prior patent is presently shortened by any terminal disclaimer," in the event that said prior patent later:
- expires for failure to pay a maintenance fee;
- is held unenforceable;
- is found invalid by a court of competent jurisdiction;
- is statutorily disclaimed in whole or terminally disclaimed under 37 CFR 1.321;
- has all claims canceled by a reexamination certificate;
- is reissued; or
- is in any manner terminated prior to the expiration of its full statutory term as presently shortened by any terminal disclaimer.

◉ Terminal disclaimer fee under 37 CFR 1.20(d) is included with Electronic Terminal Disclaimer request.

○	I certify, in accordance with 37 CFR 1.4(d)(4), that the terminal disclaimer fee under 37 CFR 1.20(d) required for this terminal disclaimer has already been paid in the above-identified application.

Applicant claims the following fee status:

○ Small Entity

○ Micro Entity

◉ Regular Undiscounted

I hereby declare that all statements made herein of my own knowledge are true and that all statements made on information and belief are believed to be true; and further that these statements were made with the knowledge that willful false statements and the like so made are punishable by fine or imprisonment, or both, under Section 1001 of Title 18 of the United States Code and that such willful false statements may jeopardize the validity of the application or any patent issued thereon.

THIS PORTION MUST BE COMPLETED BY THE SIGNATORY OR SIGNATORIES

I certify, in accordance with 37 CFR 1.4(d)(4) that I am:

◉ An attorney or agent registered to practice before the Patent and Trademark Office who is of record in this application

Registration Number 66850

○ A sole inventor

○ A joint inventor; I certify that I am authorized to sign this submission on behalf of all of the inventors as evidenced by the power of attorney in the application

○ A joint inventor; all of whom are signing this request

Signature	/William G. Howison, Reg. #66850/
Name	William G. Howison

*Statement under 37 CFR 3.73(b) is required if terminal disclaimer is signed by the assignee (owner).
Form PTO/SB/96 may be used for making this certification. See MPEP § 324.

Electronic Patent Application Fee Transmittal

Application Number:	17371839
Filing Date:	09-Jul-2021
Title of Invention:	SEMICONDUCTOR DEVICES WITH GRADED DOPANT REGIONS
First Named Inventor/Applicant Name:	G.R. MOHAN RAO
Filer:	William G. Howison
Attorney Docket Number:	GRTD60-35314

Filed as Large Entity

Filing Fees for Utility under 35 USC 111(a)

Description	Fee Code	Quantity	Amount	Sub-Total in USD($)
Basic Filing:				
STATUTORY OR TERMINAL DISCLAIMER	1814	1	170	170
Pages:				
Claims:				
Miscellaneous-Filing:				
Petition:				
Patent-Appeals-and-Interference:				
Post-Allowance-and-Post-Issuance:				

Description	Fee Code	Quantity	Amount	Sub-Total in USD($)
Extension-of-Time:				
Miscellaneous:				
			Total in USD ($)	**170**

Doc Code: DISQ.E.FILE
Document Description: Electronic Terminal Disclaimer – Approved

Application No.: 17371839

Filing Date: 09-Jul-2021

Applicant/Patent under Reexamination: RAO

Electronic Terminal Disclaimer filed on March 4, 2022

☒ APPROVED

This patent is subject to a terminal disclaimer

☐ DISAPPROVED

Approved/Disapproved by: Electronic Terminal Disclaimer automatically approved by EFS-Web

U.S. Patent and Trademark Office

Electronic Acknowledgement Receipt

EFS ID:	45143893
Application Number:	17371839
International Application Number:	
Confirmation Number:	2197
Title of Invention:	SEMICONDUCTOR DEVICES WITH GRADED DOPANT REGIONS
First Named Inventor/Applicant Name:	G.R. MOHAN RAO
Customer Number:	25883
Filer:	William G. Howison
Filer Authorized By:	
Attorney Docket Number:	GRTD60-35314
Receipt Date:	04-MAR-2022
Filing Date:	09-JUL-2021
Time Stamp:	12:30:37
Application Type:	Utility under 35 USC 111(a)

Payment information:

Submitted with Payment	yes
Payment Type	CARD
Payment was successfully received in RAM	$170
RAM confirmation Number	E202234C30322647
Deposit Account	500208
Authorized User	William Howison

The Director of the USPTO is hereby authorized to charge indicated fees and credit any overpayment as follows:

37 CFR 1.16 (National application filing, search, and examination fees)

37 CFR 1.17 (Patent application and reexamination processing fees)

37 CFR 1.19 (Document supply fees)

37 CFR 1.21 (Miscellaneous fees and charges)

File Listing:

Document Number	Document Description	File Name	File Size(Bytes)/ Message Digest	Multi Part /.zip	Pages (if appl.)
1	Terminal Disclaimer-Filed (Electronic)	eTerminal-Disclaimer.pdf	41402 4d991e41980f21eb9155bf9068f5448b37bf6f71	no	2
Warnings:					
Information:					
2	Fee Worksheet (SB06)	fee-info.pdf	38019 8ce81bc4d9c0cfb1086a96d9c0b9a84fc97e97bf	no	2
Warnings:					
Information:					
		Total Files Size (in bytes):	79421		

This Acknowledgement Receipt evidences receipt on the noted date by the USPTO of the indicated documents, characterized by the applicant, and including page counts, where applicable. It serves as evidence of receipt similar to a Post Card, as described in MPEP 503.

New Applications Under 35 U.S.C. 111
If a new application is being filed and the application includes the necessary components for a filing date (see 37 CFR 1.53(b)-(d) and MPEP 506), a Filing Receipt (37 CFR 1.54) will be issued in due course and the date shown on this Acknowledgement Receipt will establish the filing date of the application.
National Stage of an International Application under 35 U.S.C. 371
If a timely submission to enter the national stage of an international application is compliant with the conditions of 35 U.S.C. 371 and other applicable requirements a Form PCT/DO/EO/903 indicating acceptance of the application as a national stage submission under 35 U.S.C. 371 will be issued in addition to the Filing Receipt, in due course.
New International Application Filed with the USPTO as a Receiving Office
If a new international application is being filed and the international application includes the necessary components for an international filing date (see PCT Article 11 and MPEP 1810), a Notification of the International Application Number and of the International Filing Date (Form PCT/RO/105) will be issued in due course, subject to prescriptions concerning national security, and the date shown on this Acknowledgement Receipt will establish the international filing date of the application.

UNITED STATES PATENT AND TRADEMARK OFFICE

UNITED STATES DEPARTMENT OF COMMERCE
United States Patent and Trademark Office
Address: COMMISSIONER FOR PATENTS
P.O. Box 1450
Alexandria, Virginia 22313-1450
www.uspto.gov

APPLICATION NO.	FILING DATE	FIRST NAMED INVENTOR	ATTORNEY DOCKET NO.	CONFIRMATION NO.
17/371,839	07/09/2021	G.R. MOHAN RAO	GRTD60-35314	2197

25883 7590 02/28/2022
MUNCK WILSON MANDALA L.L.P
P.O. Drawer 800889
DALLAS, TX 75380

EXAMINER
ARORA, AJAY

ART UNIT	PAPER NUMBER
2892	

NOTIFICATION DATE	DELIVERY MODE
02/28/2022	ELECTRONIC

Please find below and/or attached an Office communication concerning this application or proceeding.

The time period for reply, if any, is set in the attached communication.

Notice of the Office communication was sent electronically on above-indicated "Notification Date" to the following e-mail address(es):

IPdocketing@munckwilson.com
admin@dalpat.com
eofficeaction@appcoll.com

Office Action Summary	Application No. 17/371,839	Applicant(s) RAO, G.R. MOHAN	
	Examiner AJAY ARORA	Art Unit 2892	AIA (FITF) Status No

-- The MAILING DATE of this communication appears on the cover sheet with the correspondence address --

Period for Reply

A SHORTENED STATUTORY PERIOD FOR REPLY IS SET TO EXPIRE 3 MONTHS FROM THE MAILING DATE OF THIS COMMUNICATION.

- Extensions of time may be available under the provisions of 37 CFR 1.136(a). In no event, however, may a reply be timely filed after SIX (6) MONTHS from the mailing date of this communication.
- If NO period for reply is specified above, the maximum statutory period will apply and will expire SIX (6) MONTHS from the mailing date of this communication.
- Failure to reply within the set or extended period for reply will, by statute, cause the application to become ABANDONED (35 U.S.C. § 133). Any reply received by the Office later than three months after the mailing date of this communication, even if timely filed, may reduce any earned patent term adjustment. See 37 CFR 1.704(b).

Status

1)☑ Responsive to communication(s) filed on 12/1/2021.

☐ A declaration(s)/affidavit(s) under **37 CFR 1.130(b)** was/were filed on _____.

2a)☑ This action is **FINAL.** 2b) ☐ This action is non-final.

3)☐ An election was made by the applicant in response to a restriction requirement set forth during the interview on _____; the restriction requirement and election have been incorporated into this action.

4)☐ Since this application is in condition for allowance except for formal matters, prosecution as to the merits is closed in accordance with the practice under *Ex parte Quayle*, 1935 C.D. 11, 453 O.G. 213.

Disposition of Claims*

5) ☑ Claim(s) 1-30 is/are pending in the application.

5a) Of the above claim(s) _____ is/are withdrawn from consideration.

6) ☐ Claim(s) _____ is/are allowed.

7) ☑ Claim(s) 1-30 is/are rejected.

8) ☐ Claim(s) _____ is/are objected to.

9) ☐ Claim(s) _____ are subject to restriction and/or election requirement

* If any claims have been determined allowable, you may be eligible to benefit from the **Patent Prosecution Highway** program at a participating intellectual property office for the corresponding application. For more information, please see http://www.uspto.gov/patents/init_events/pph/index.jsp or send an inquiry to **PPHfeedback@uspto.gov.**

Application Papers

10)☐ The specification is objected to by the Examiner.

11)☐ The drawing(s) filed on _____ is/are: a)☐ accepted or b)☐ objected to by the Examiner.

Applicant may not request that any objection to the drawing(s) be held in abeyance. See 37 CFR 1.85(a).

Replacement drawing sheet(s) including the correction is required if the drawing(s) is objected to. See 37 CFR 1.121(d).

Priority under 35 U.S.C. § 119

12)☐ Acknowledgment is made of a claim for foreign priority under 35 U.S.C. § 119(a)-(d) or (f).

Certified copies:

a)☐ All b)☐ Some** c)☐ None of the:

1.☐ Certified copies of the priority documents have been received.

2.☐ Certified copies of the priority documents have been received in Application No. _____.

3.☐ Copies of the certified copies of the priority documents have been received in this National Stage application from the International Bureau (PCT Rule 17.2(a)).

** See the attached detailed Office action for a list of the certified copies not received.

Attachment(s)

1) ☐ Notice of References Cited (PTO-892)

2) ☐ Information Disclosure Statement(s) (PTO/SB/08a and/or PTO/SB/08b) Paper No(s)/Mail Date _____.

3) ☐ Interview Summary (PTO-413) Paper No(s)/Mail Date _____.

4) ☐ Other: _____.

DETAILED ACTION

Notice of Pre-AIA or AIA Status

1. The present application is being examined under the pre-AIA first to invent provisions.

Double Patenting

2. The nonstatutory double patenting rejection is based on a judicially created doctrine grounded in public policy (a policy reflected in the statute) so as to prevent the unjustified or improper timewise extension of the "right to exclude" granted by a patent and to prevent possible harassment by multiple assignees. A nonstatutory double patenting rejection is appropriate where the conflicting claims are not identical, but at least one examined application claim is not patentably distinct from the reference claim(s) because the examined application claim is either anticipated by, or would have been obvious over, the reference claim(s). See, e.g., *In re Berg*, 140 F.3d 1428, 46 USPQ2d 1226 (Fed. Cir. 1998); *In re Goodman*, 11 F.3d 1046, 29 USPQ2d 2010 (Fed. Cir. 1993); *In re Longi*, 759 F.2d 887, 225 USPQ 645 (Fed. Cir. 1985); *In re Van Ornum*, 686 F.2d 937, 214 USPQ 761 (CCPA 1982); *In re Vogel*, 422 F.2d 438, 164 USPQ 619 (CCPA 1970); *In re Thorington*, 418 F.2d 528, 163 USPQ 644 (CCPA 1969).

A timely filed terminal disclaimer in compliance with 37 CFR 1.321(c) or 1.321(d) may be used to overcome an actual or provisional rejection based on nonstatutory double patenting provided the reference application or patent either is shown to be commonly owned with the examined application, or claims an invention made as a

result of activities undertaken within the scope of a joint research agreement. See MPEP § 717.02 for applications subject to examination under the first inventor to file provisions of the AIA as explained in MPEP § 2159. See MPEP § 2146 *et seq.* for applications not subject to examination under the first inventor to file provisions of the AIA. A terminal disclaimer must be signed in compliance with 37 CFR 1.321(b).

The USPTO Internet website contains terminal disclaimer forms which may be used. Please visit www.uspto.gov/patent/patents-forms. The filing date of the application in which the form is filed determines what form (e.g., PTO/SB/25, PTO/SB/26, PTO/AIA/25, or PTO/AIA/26) should be used. A web-based eTerminal Disclaimer may be filled out completely online using web-screens. An eTerminal Disclaimer that meets all requirements is auto-processed and approved immediately upon submission. For more information about eTerminal Disclaimers, refer to www.uspto.gov/patents/process/file/efs/guidance/eTD-info-I.jsp.

3. Claims 1-30 are rejected on the ground of nonstatutory double patenting as being unpatentable over claims 1-30 of U.S. Patent No. US 11121222. Although the claims at issue are not identical, they are not patentably distinct from each other because the claims of the current application are only different in that they claim “An electronic system, the system comprising at least one semiconductor device, the at least one semiconductor device including..” (see, for example, base claims 1 and 21) compared to claims 1-30 of U.S. Patent No. 11121222 (see for example, base claims 1 and 21), which claims a specific type of electronic system that comprises at least one semiconductor device; i.e. a VLSI semiconductor device. Thus, claims 1-30 of the

current application are broader in scope compared to the corresponding claims 1-30 of U.S. Patent No. 11121222, as explained above, but are otherwise similar.

Art Based Rejection

4. No art based rejection has been provided, as the prior art does not teach or suggest the features of claims 1-30. The closest prior art is Hong (US 2007/0045682), hereinafter Hong, especially see Figures 4A-4D and 5A-5C and para 26-32 (as also explained in Notice of Allowance of 8/11/2021 for parent application 16/947,294).

Conclusion

5. Applicant's amendment necessitated the new ground(s) of rejection presented in this Office action. Accordingly, **THIS ACTION IS MADE FINAL**. See MPEP § 706.07(a). Applicant is reminded of the extension of time policy as set forth in 37 CFR 1.136(a).

A shortened statutory period for reply to this final action is set to expire THREE MONTHS from the mailing date of this action. In the event a first reply is filed within TWO MONTHS of the mailing date of this final action and the advisory action is not mailed until after the end of the THREE-MONTH shortened statutory period, then the shortened statutory period will expire on the date the advisory action is mailed, and any extension fee pursuant to 37 CFR 1.136(a) will be calculated from the mailing date of the advisory action. In no event, however, will the statutory period for reply expire later than SIX MONTHS from the date of this final action.

6. Any inquiry concerning this communication or earlier communications from the examiner should be directed to AJAY ARORA whose telephone number is (571)272-8347. The examiner can normally be reached 9 AM - 5 PM.

Examiner interviews are available via telephone, in-person, and video conferencing using a USPTO supplied web-based collaboration tool. To schedule an interview, applicant is encouraged to use the USPTO Automated Interview Request (AIR) at http://www.uspto.gov/interviewpractice.

If attempts to reach the examiner by telephone are unsuccessful, the examiner's supervisor, Thao X. Le can be reached on 5712721708. The fax phone number for the organization where this application or proceeding is assigned is 571-273-8300.

Information regarding the status of published or unpublished applications may be obtained from Patent Center. Unpublished application information in Patent Center is available to registered users. To file and manage patent submissions in Patent Center, visit: https://patentcenter.uspto.gov. Visit https://www.uspto.gov/patents/apply/patent-center for more information about Patent Center and https://www.uspto.gov/patents/docx for information about filing in DOCX format. For additional questions, contact the Electronic Business Center (EBC) at 866-217-9197 (toll-free). If you would like assistance from a USPTO Customer Service Representative, call 800-786-9199 (IN USA OR CANADA) or 571-272-1000.

/AJAY ARORA/
Primary Examiner, Art Unit 2892

Search Notes	Application/Control No.	Applicant(s)/Patent Under Reexamination
	17/371,839	RAO, G.R. MOHAN
	Examiner	**Art Unit**
	AJAY ARORA	2892

CPC - Searched*		
Symbol	**Date**	**Examiner**
H01L 29/1095	10/23/2021	AKA

CPC Combination Sets - Searched*		
Symbol	**Date**	**Examiner**

US Classification - Searched*			
Class	**Subclass**	**Date**	**Examiner**
257	25	10/23/2021	AKA

* See search history printout included with this form or the SEARCH NOTES box below to determine the scope of the search.

Search Notes		
Search Notes	**Date**	**Examiner**
Inventor search	10/23/2021	AKA
Assignee search	10/23/2021	AKA
References for all parent applications (10/934,915; 11/622,496; 15/590,282; 16/717950 and 16/947294) considered	10/23/2021	AKA
.clm. interference search	10/23/2021	AKA
EAST search history report	10/23/2021	AKA
Revised EAST search history report	02/23/2022	AKA

/AJAY ARORA/ Primary Examiner, Art Unit 2892	

Greenthread Ex. 2071, p. 73 of 211
Semiconductor v. Greenthread
IPR2023-01244

Search Notes	Application/Control No.	Applicant(s)/Patent Under Reexamination
	17/371,839	RAO, G.R. MOHAN
	Examiner	**Art Unit**
	AJAY ARORA	2892

Interference Search			
US Class/CPC Symbol	**US Subclass/CPC Group**	**Date**	**Examiner**
H01L	29/1095	10/23/2021	AKA
257	25	10/23/2021	AKA

/AJAY ARORA/ Primary Examiner, Art Unit 2892	

Greenthread Ex. 2071, p. 71 of 211
Semiconductor v. Greenthread
IPR2023-01244

Index of Claims	Application/Control No.	Applicant(s)/Patent Under Reexamination
	17/371,839	RAO, G.R. MOHAN
	Examiner	**Art Unit**
	AJAY ARORA	2892

✓	Rejected	-	Cancelled	N	Non-Elected	A	Appeal
=	Allowed	÷	Restricted	I	Interference	O	Objected

CLAIMS

☐ Claims renumbered in the same order as presented by applicant ☐ CPA ☐ T.D. ☐ R.1.47

CLAIM		DATE								
Final	Original	10/23/2021	02/23/2022							
	1	✓	✓							
	2	✓	✓							
	3	✓	✓							
	4	✓	✓							
	5	✓	✓							
	6	✓	✓							
	7	✓	✓							
	8	✓	✓							
	9	✓	✓							
	10	✓	✓							
	11	✓	✓							
	12	✓	✓							
	13	✓	✓							
	14	✓	✓							
	15	✓	✓							
	16	✓	✓							
	17	✓	✓							
	18	✓	✓							
	19	✓	✓							
	20	✓	✓							
	21	✓	✓							
	22	✓	✓							
	23	✓	✓							
	24	✓	✓							
	25	✓	✓							
	26	✓	✓							
	27	✓	✓							
	28	✓	✓							
	29	✓	✓							
	30	✓	✓							

PE2E SEARCH - Search History (Prior Art)

Ref #	Hits	Search Query	DBs	Default Operator	Plurals	British Equivalents	Time Stamp
L34	3	16/947,294	(US-PGPUB; USPAT; USOCR; FIT (AU, AP, AT, BE, BG, BR, BY, CA, CH, CN, CS, CU, CZ, DD, DE, DK, EA, EE, EP, ES, FI, FR, GB, HR, HU, ID, IE, IL, IS, IT, JP, KR, LT, LU, LV, MA, OA, RU, SU, WO, MC, MD, MY, NL, NO, NZ, PH, PL, PT, RO, RS, SE, SG, SI, SK, TH, TN, TR, TW, UA, VN); FPRS; EPO; JPO; DERWENT; IBM_TDB)	OR	ON	ON	2022/02/23 11:02 PM
L35	544	(source drain source$1drain) AND drift AND ((gradient graded) near2 concentration near2 dop$3) AND well	(US-PGPUB; USPAT; USOCR; FPRS; EPO; JPO; DERWENT; IBM_TDB)	OR	OFF	OFF	2022/02/23 11:22 PM

PE2E SEARCH - Search History (Interference)

There are no Interference searches to show.

Greenthread Ex. 2071, p. 76 of 211
Semiconductor v. Greenthread
IPR2023-01244
AA

UNITED STATES PATENT AND TRADEMARK OFFICE

UNITED STATES DEPARTMENT OF COMMERCE
United States Patent and Trademark Office
Address: COMMISSIONER FOR PATENTS
P.O. Box 1450
Alexandria, Virginia 22313-1450
www.uspto.gov

APPLICATION NO.	FILING DATE	FIRST NAMED INVENTOR	ATTORNEY DOCKET NO.	CONFIRMATION NO.
17/371,839	07/09/2021	G.R. MOHAN RAO	GRTD60-35314	2197

25883 7590 01/31/2022
MUNCK WILSON MANDALA L.L.P
P.O. Drawer 800889
DALLAS, TX 75380

EXAMINER
ARORA, AJAY

ART UNIT	PAPER NUMBER
2892	

NOTIFICATION DATE	DELIVERY MODE
01/31/2022	ELECTRONIC

Please find below and/or attached an Office communication concerning this application or proceeding.

The time period for reply, if any, is set in the attached communication.

Notice of the Office communication was sent electronically on above-indicated "Notification Date" to the following e-mail address(es):

IPdocketing@munckwilson.com
admin@dalpat.com
eofficeaction@appcoll.com

UNITED STATES PATENT AND TRADEMARK OFFICE

Commissioner for Patents
United States Patent and Trademark Office
P.O. Box 1450
Alexandria, VA 22313-1450
www.uspto.gov

In re Application of	:	
RAO, G.R. MOHAN	:	
Application No. 17/371,839	:	DECISION ON PETITION
Filed: 9 Jul 2021	:	
For: SEMICONDUCTOR DEVICES WITH	:	
GRADED DOPANT REGIONS	:	

This is a decision on the petition under 37 CFR 1.182 filed October 19, 2021, to expunge an assignment previously recorded against the above-identified application. In particular, the petitioner requests that Assignment 2, i.e., from Greenthread, LLC to Vervain, LLC be expunged.

The petition to expunge the assignment documents is **DISMISSED**. This is not a final agency action.

As discussed in the *Manual of Patent Examining Procedure* (MPEP) § 323.01(d), petitions to correct, modify or "expunge" assignment records are **rarely** granted. Such petitions are granted only if the petitioner can prove that:

(A) the normal corrective procedures outlined in MPEP § 323.01(a) through § 323.01(c) will not provide the petitioner with adequate relief; and

(B) the integrity of the assignment records will not be affected by granting the petition.

The petition has not proven either item (A) or (B).

In regard to item (A), petitioner asserts that the corrective procedures outlined in MPEP § 323.01(a) through § 323.01(c) will not provide adequate relief. In particular, petitioner argues that MPEP § 323.01(a) and (b) do not apply because the recordation error is not a typographical error and matches the cover sheet. Further, petitioner argues that MPEP § 323.01(c) does not apply because the assignment was not improperly filed and recorded by another person against the above-identified application. These arguments are not persuasive as the corrective procedures outlined in MPEP § 323.01(a) through § 323.01(c) are not limited to only minor or typographical errors in filing. A corrective document may be recorded as set forth below.

Furthermore, in regard to item (B), petitioner contends that the integrity of the assignment records will not be affected by the desired expungement. However, the removal of a document in its entirety, as requested, will affect the assignment records. The integrity of the records is recognized as separate from the chain of title. Expungement would prevent the records from being searchable in the Assignment Historical Database or otherwise available to the public, which may be necessary for a competent authority to determine the proper chain of title. Moreover, the expungement requested involves a validity determination by the USPTO regarding the information to be expunged, which may impact ownership claims on the related patent. The USPTO, however, has no authority to decide ownership issues. *See Cedars-Sinai Medical Center v. Watkins*, 11F.3d 1573, 1581 n.10, 29 USPQ 2d 1188, 1194 n.10 (Fed. Cir. 1993), *cert. denied*, 114 S. Ct. (1994). Rather, state law governs contractual obligations, including patent assignment agreements. *See Intellectual Ventures I LLC v. Erie Indem. Co.*, 121 USPQ2d 1928, 1930 (Fed. Cir. 2017); *In re Haines*, 1900 C.D. 102, 103 (Comm'r Pat. 1900). While the ownership of patent rights is typically a question exclusively for state courts, the question of whether contractual language effects a present assignment agreement of patent rights, or an agreement to assign rights in the future, is resolved by Federal Circuit law. *See Abraxis Bioscience Inc. v. Navinta LLC*, 96 USPQ2d 1977, 1981 (Fed. Cir. 2010); *Speedplay, Inc. v. Bebpo, Inc.*, 211 F.3d 1245, 1253 [53USPQ2d 1984] (Fed. Cir. 2000).

35 U.S.C. § 261 provides the USPTO with only the limited authority to maintain the assignment records, and does not grant the USPTO with the authority to remove documents.

Petitioner should note that, as discussed in MPEP § 323.01(d),

> "Even if a petition to "expunge" a document is granted with respect to a particular application or patent, the image of the recorded document will remain in the records of the Assignment Services Division at the same reel and frame number, and the image will appear when someone views that reel and frame number."

In the context of the assignment records, "expunge" does not mean that a document will be removed in its entirety. Rather, "expunge" means that a document containing sensitive information, such as a Social Security Number, may be replaced in the electronically searchable records with a redacted copy of the same document. The original document will remain in the assignment records at the reel/frame number given without redaction. Through "expungement," the electronic links between the document and the application will be deleted so the original document is no longer available through an electronic search.

As background, the USPTO simply acts in a ministerial capacity in recording documents that have been submitted for recordation. *See* 35 USC 261 and 37 CFR 3.11. However, the recording of a document pursuant to 37 CFR 3.11 is **not** a determination by the USPTO of the validity of the document *per se* or the effect that document has on the title to a patent or application. *See* 37 CFR 3.54. Moreover, it is USPTO policy to maintain a complete history of claimed interests in a

given property, and, as such, a recorded assignment document will be retained, even if it is subsequently found to be invalid. *In re Raney*, 24 USPQ2d 1713 (Comm'r Pat. 1992).

Here, petitioner seeks an extraordinary remedy, properly addressed under 37 CFR 1.182. The USPTO will not normally resort to an extraordinary remedy under 37 CFR 1.182 if the rules of practice and the procedures before the USPTO already provide an avenue for the requested relief. *See Cantello v. Rasmussen*, 220 USPQ 664, (Comm'r Pat. 1982).

As set forth in MPEP § 323, an error in a recorded assignment is not corrected by expunging the previous document, but by simply submitting a "corrective document" that explains the nature of the recorded document so as to clarify the assignment records. "Corrective documents" are not limited to assignments, but include any documents affecting title to a patent or application. *See* MPEP § 313. This would include an explanation of the recorded document so as to clarify the assignment records. The new recordation form cover sheet must identify the submission as a "corrective document" submission and indicate the reel and frame number where the incorrectly recorded assignment document appears. The corrective document will be recorded and given a new reel and frame number and recording date. The recording fee set forth in 37 CFR 1.21(h) is required for each patent application and patent against which the corrective document is being recorded. *See* MPEP § 302.06.

Therefore, the rules of practice and the procedures before the USPTO provide an avenue for the requested relief without relying upon extraordinary measures. As a request for the Office to invalidate an assignment is both extraordinary and contrary to USPTO policy, this petition must be dismissed.

Telephone inquiries concerning this communication should be directed to Katherine Zalasky McDonald at (571) 270-7064.

/Christopher Bottorff/

Christopher Bottorff
Petitions Examiner
Office of Petitions

PTO/SB/06 (09-11)
Approved for use through 1/31/2014. OMB 0651-0032
U.S. Patent and Trademark Office; U.S. DEPARTMENT OF COMMERCE
Under the Paperwork Reduction Act of 1995, no persons are required to respond to a collection of information unless it displays a valid OMB control number.

PATENT APPLICATION FEE DETERMINATION RECORD Substitute for Form PTO-875	Application or Docket Number 17/371,839	Filing Date 07/09/2021	☐ To be Mailed

ENTITY: ☑ LARGE ☐ SMALL ☐ MICRO

APPLICATION AS FILED - PART I

FOR	(Column 1) NUMBER FILED	(Column 2) NUMBER EXTRA		RATE ($)	FEE ($)
☐ BASIC FEE (37 CFR 1.16(a), (b), or (c))	N/A	N/A		N/A	
☐ SEARCH FEE (37 CFR 1.16(k), (i), or (m))	N/A	N/A		N/A	
☐ EXAMINATION FEE (37 CFR 1.16(o), (p), or (q))	N/A	N/A		N/A	
TOTAL CLAIMS (37 CFR 1.16(i))	minus 20 =	*		x $100 =	
INDEPENDENT CLAIMS (37 CFR 1.16(h))	minus 3 =	*		x $480 =	
☐ APPLICATION SIZE FEE (37 CFR 1.16(s))	If the specification and drawings exceed 100 sheets of paper, the application size fee due is $310 ($155 for small entity) for each additional 50 sheets or fraction thereof. See 35 U.S.C. 41(a)(1)(G) and 37 CFR 1.16(s).				
☐ MULTIPLE DEPENDENT CLAIM PRESENT (37 CFR 1.16(j))					
* If the difference in column 1 is less than zero, enter "0" in column 2.				TOTAL	

APPLICATION AS AMENDED - PART II

AMENDMENT	12/01/2021	(Column 1) CLAIMS REMAINING AFTER AMENDMENT		(Column 2) HIGHEST NUMBER PREVIOUSLY PAID FOR	(Column 3) PRESENT EXTRA		RATE ($)	ADDITIONAL FEE ($)
	Total (37 CFR 1.16(i))	* 30	Minus	** 30	= 0		x $100 =	0
	Independent (37 CFR 1.16(h))	* 2	Minus	*** 3	= 0		x $480 =	0
	☐ Application Size Fee (37 CFR 1.16(s))							
	☐ FIRST PRESENTATION OF MULTIPLE DEPENDENT CLAIM (37 CFR 1.16(j))							
							TOTAL ADD'L FEE	0

AMENDMENT		(Column 1) CLAIMS REMAINING AFTER AMENDMENT		(Column 2) HIGHEST NUMBER PREVIOUSLY PAID FOR	(Column 3) PRESENT EXTRA		RATE ($)	ADDITIONAL FEE ($)
	Total (37 CFR 1.16(i))	*	Minus	**	=		x $0 =	
	Independent (37 CFR 1.16(h))	*	Minus	***	=		x $0 =	
	☐ Application Size Fee (37 CFR 1.16(s))							
	☐ FIRST PRESENTATION OF MULTIPLE DEPENDENT CLAIM (37 CFR 1.16(j))							
							TOTAL ADD'L FEE	

* If the entry in column 1 is less than the entry in column 2, write "0" in column 3.	LIE
** If the "Highest Number Previously Paid For" IN THIS SPACE is less than 20, enter "20".	/TINA M. BELL/
*** If the "Highest Number Previously Paid For" IN THIS SPACE is less than 3, enter "3".	
The "Highest Number Previously Paid For" (Total or Independent) is the highest number found in the appropriate box in column 1.	

This collection of information is required by 37 CFR 1.16. The information is required to obtain or retain a benefit by the public which is to file (and by the USPTO to process) an application. Confidentiality is governed by 35 U.S.C. 122 and 37 CFR 1.14. This collection is estimated to take 12 minutes to complete, including gathering, preparing, and submitting the completed application form to the USPTO. Time will vary depending upon the individual case. Any comments on the amount of time you require to complete this form and/or suggestions for reducing this burden, should be sent to the Chief Information Officer, U.S. Patent and Trademark Office, U.S. Department of Commerce, P.O. Box 1450, Alexandria, VA 22313-1450. DO NOT SEND FEES OR COMPLETED FORMS TO THIS ADDRESS. **SEND TO: Commissioner for Patents, P.O. Box 1450, Alexandria, VA 22313-1450.**

If you need assistance in completing the form, call 1-800-PTO-9199 and select option 2.

IN THE UNITED STATES PATENT AND TRADEMARK OFFICE

In re application of:	G.R. MOHAN RAO
Serial No.:	17/371,839
Confirmation No.:	2197
Filed:	July 9, 2021
Group:	2892
Examiner:	Ajay ARORA
For:	SEMICONDUCTOR DEVICES WITH GRADED DOPANT REGIONS

Mail Stop AMENDMENT
Commissioner for Patents
P.O. Box 1450
Alexandria, VA 22313-1450

Dear Sir:

AMENDMENT AND RESPONSE TO OFFICE ACTION

This communication is responsive to the Examiner's Office Action dated October 28, 2021. Reconsideration is respectfully requested.

Amendments to the Claims are reflected in the listing of claims beginning on page 2 of this paper. **Remarks/Arguments** begin on page 7 of this paper.

In the Claims

This listing of claims will replace all prior versions, and listings, of claims in the application:

1. (Currently amended) An electronic system ~~VLSI semiconductor device~~, the system comprising:

at least one semiconductor device, the at least one semiconductor device including:

a substrate of a first doping type at a first doping level having a surface;

a first active region disposed adjacent the surface with a second doping type opposite in conductivity to the first doping type and within which transistors can be formed;

a second active region separate from the first active region disposed adjacent to the first active region and within which transistors can be formed;

transistors formed in at least one of the first active region or second active region;

at least a portion of at least one of the first and second active regions having at least one graded dopant concentration to aid carrier movement from the first and second active regions towards an area of the substrate where there are no active regions; and

at least one well region adjacent to the first or second active region containing at least one graded dopant region, the graded dopant region to aid carrier movement from the surface towards the area of the substrate where there are no active regions, wherein at least some of the transistors form digital logic of the [[VLSI]]semiconductor device.

2. (Currently amended) The system ~~VLSI semiconductor device~~ of Claim 1, wherein the substrate of the at least one semiconductor device is a p-type substrate.

3. (Currently amended) The system ~~VLSI semiconductor device~~ of Claim 1, wherein the substrate of the at least one semiconductor device has epitaxial silicon on top of a nonepitaxial substrate.

4. (Currently amended) The system ~~VLSI semiconductor device~~ of Claim 1, wherein the first active region and second active region of the at least one semiconductor device contain digital logic formed by one of either p-channel and n-channel devices.

5. (Currently amended) The system ~~VLSI semiconductor device~~ of Claim 1, wherein the first active region and second active region of the at least one semiconductor device contain either p-channel or n-channel devices in n-wells or p-wells, respectively, and each well has at least one graded dopant.

6. (Currently amended) The system ~~VLSI semiconductor device~~ of Claim 1, wherein the first active region and second active region of the at least one semiconductor device are each separated by at least one isolation region.

7. (Currently amended) The system ~~VLSI semiconductor device~~ of Claim 1, wherein the graded dopant is fabricated with an ion implantation process.

8. (Currently amended) The system ~~VLSI semiconductor device~~ of Claim 1, wherein the first and second active regions of the at least one semiconductor device are formed adjacent the first surface of the substrate of the at least one semiconductor device.

9. (Currently amended) The system ~~VLSI semiconductor device~~ of Claim 1, wherein dopants of the graded dopant concentration in the first active region or the second active region of the at least one semiconductor device are either p-type or n-type.

10. (Currently amended) The system ~~VLSI semiconductor device~~ of Claim 1, wherein dopants of the graded dopant concentration in the first active region of the at least one semiconductor device are both p-type and n-type.

11. (Currently amended) The system ~~VLSI semiconductor device~~ of Claim 1, wherein dopants of the graded dopant concentration in the second active region of the at least one semiconductor device are both p-type and n-type.

12. (Currently amended) The system ~~VLSI semiconductor device~~ of Claim 1, wherein dopants of the graded dopant region in the well region of the at least one semiconductor device are both p-type and n-type.

13. (Currently amended) The system ~~VLSI semiconductor device~~ of claim 1, wherein the transistors which can be formed in the first and second active regions of the at least one semiconductor device are CMOS digital logic transistors requiring at least a source, a drain, a gate and a channel.

14. (Currently amended) The system ~~VLSI semiconductor device~~ of Claim 1, wherein the at least one semiconductor device is a dynamic random access memory (DRAM).

15. (Currently amended) The system ~~VLSI semiconductor device~~ of Claim 1, wherein the at least one semiconductor device is a complementary metal oxide semiconductor (CMOS) with a nonepitaxial substrate.

16. (Currently amended) The system ~~VLSI semiconductor device~~ of Claim 1, wherein the at least one semiconductor device is a flash memory.

17. (Currently amended) The system ~~VLSI semiconductor device~~ of Claim 1, wherein the at least one semiconductor device comprises digital logic and capacitors.

18. (Currently amended) The system ~~VLSI semiconductor device~~ of Claim 1, wherein the at least one semiconductor device is a central processing unit.

19. (Currently amended) The system ~~VLSI semiconductor device~~ of Claim 1, wherein the at least one semiconductor device is an image sensor.

20. (Currently amended) The system ~~VLSI semiconductor device~~ of Claim 1, wherein each of the first and second active regions of the at least one semiconductor device are in the lateral or vertical direction.

21. (Currently amended) An electronic system ~~VLSI semiconductor device~~, comprising:

at least one semiconductor device, the at least one semiconductor device including:

a substrate of a first doping type at a first doping level having a surface;

a first active region disposed adjacent the surface of the substrate with a second doping type opposite in conductivity to the first doping type and within which transistors can be formed in the surface thereof;

a second active region separate from the first active region disposed adjacent to the first active region and within which transistors can be formed in the surface thereof;

transistors formed in at least one of the first active region or second active region;

at least a portion of at least one of the first and second active regions having at least one graded dopant concentration to aid carrier movement from the surface to an area of the substrate where there are no active regions; and

at least one well region adjacent to the first or second active region containing at least one graded dopant region, the graded dopant region to aid carrier movement from the surface to the area of the substrate where there are no active regions, and wherein the graded dopant concentration is linear, quasilinear, error function, complementary error function, or any combination thereof.

22. (Currently amended) The system ~~VLSI semiconductor device~~ of Claim 21, wherein the substrate of the at least one semiconductor device is an n-type substrate.

23. (Currently amended) The system ~~VLSI semiconductor device~~ of Claim 21, wherein the substrate of the at least one semiconductor device is a p-type substrate.

Greenthread Ex. 2071, p. 86 of 211
Semiconductor v. Greenthread
IPR2023-01244

24. (Currently amended) The system ~~VLSI semiconductor device~~ of Claim 21, wherein the substrate of the at least one semiconductor device has epitaxial silicon on top of a nonepitaxial substrate.

25. (Currently amended) The system ~~VLSI semiconductor device~~ of Claim 21, wherein the first active region and second active region of the at least one semiconductor device contain at least one of either p-channel and n-channel devices.

26. (Currently amended) The system ~~VLSI semiconductor device~~ of Claim 21, wherein the first active region and second active region of the at least one semiconductor device contain either p-channel or n-channel devices in n-wells or p-wells, respectively, and each well has at least one graded dopant.

27. (Currently amended) The system ~~VLSI semiconductor device~~ of Claim 21, wherein the first active region and second active region of the at least one semiconductor device are each separated by at least one isolation region.

28. (Currently amended) The system ~~VLSI semiconductor device~~ of Claim 21, wherein dopants of the graded dopant concentration in the first active region or the second active region of the at least one semiconductor device are either p-type or n-type.

29. (Currently amended) The system ~~VLSI semiconductor device~~ of Claim 21, wherein dopants of the graded dopant concentration in the first active region of the at least one semiconductor device are both p-type and n-type.

30. (Currently amended) The system ~~VLSI semiconductor device~~ of Claim 21, wherein dopants of the graded dopant concentration in the second active region of the at least one semiconductor device are both p-type and n-type.

REMARKS

Applicant has carefully reviewed the Office Action dated October 28, 2021. Applicant has amended Claims 1-30 to more clearly point out the present inventive concept. The amendments are supported by the specification as filed, such as in paragraph [0002]. No new matter has been added. Reconsideration and favorable action is respectfully requested.

Claims 1-30 were provisionally rejected under 35 U.S.C. § 101 as claiming the same invention as that of Claims 1-30 of co-pending Application No. 16/947,294 ("'294" Application"). This rejection is respectfully traversed.

A reliable test for double patenting under 35 U.S.C. § 101 is whether a claim in the application could be literally infringed without literally infringing a corresponding claim in the patent. *See* MPEP § 804. Although a terminal disclaimer is not effective in overcoming a statutory double patenting rejection, the claims may be cancelled or amended so that they are not coextensive in scope. *Id.*

Applicant submits that Claims 1-30, as amended herein, are not coextensive in scope with the '294 Application. Accordingly, Applicant respectfully requests that the provisional double patenting rejection be withdrawn.

Applicant has now made an earnest attempt in order to place this case in condition for allowance. For the reasons stated above, Applicant respectfully requests full allowance of the claims as amended.

If any issues arise, or if the Examiner has any suggestions for expediting allowance of this Application, the Applicant respectfully invites the Examiner to contact the undersigned at the telephone number indicated below or at whowison@munckwilson.com.

Recognizing that Internet communications are not secure, Applicant hereby authorizes the USPTO to communicate with the undersigned and practitioners in accordance with 37 CFR 1.33 and 37 CFR 1.34 concerning any subject matter of this application by video conferencing, instant

messaging, or electronic mail. Applicant understands that a copy of these communications will be made of record in the application file.

Please charge any additional fees or deficiencies in fees or credit any overpayment to Deposit Account No. 50-0208/GRTD60-35314.

Respectfully submitted,
MUNCK WILSON MANDALA, LLP
Attorneys for Applicant

/William G. Howison, Reg. #66850/

William G. Howison
Registration No. 66,850

WGH/als

P.O. Drawer 800889
Dallas, Texas 75380
Tel: 972-628-3600
Fax: 972-628-3616
December 1, 2021

Electronic Acknowledgement Receipt

EFS ID:	44406378
Application Number:	17371839
International Application Number:	
Confirmation Number:	2197
Title of Invention:	SEMICONDUCTOR DEVICES WITH GRADED DOPANT REGIONS
First Named Inventor/Applicant Name:	G.R. MOHAN RAO
Customer Number:	25883
Filer:	William G. Howison
Filer Authorized By:	
Attorney Docket Number:	GRTD60-35314
Receipt Date:	01-DEC-2021
Filing Date:	09-JUL-2021
Time Stamp:	19:00:40
Application Type:	Utility under 35 USC 111(a)

Payment information:

Submitted with Payment	no

File Listing:

Document Number	Document Description	File Name	File Size(Bytes)/ Message Digest	Multi Part /.zip	Pages (if appl.)
1		GRT35314AMD.pdf	123821 6ce164b4363ce2aead4fe55db6433770dad9b708	yes	8

	Multipart Description/PDF files in .zip description		
	Document Description	**Start**	**End**
	Amendment/Req. Reconsideration-After Non-Final Reject	1	1
	Claims	2	6
	Applicant Arguments/Remarks Made in an Amendment	7	8
Warnings:			
Information:			
	Total Files Size (in bytes):	123821	

This Acknowledgement Receipt evidences receipt on the noted date by the USPTO of the indicated documents, characterized by the applicant, and including page counts, where applicable. It serves as evidence of receipt similar to a Post Card, as described in MPEP 503.

New Applications Under 35 U.S.C. 111
If a new application is being filed and the application includes the necessary components for a filing date (see 37 CFR 1.53(b)-(d) and MPEP 506), a Filing Receipt (37 CFR 1.54) will be issued in due course and the date shown on this Acknowledgement Receipt will establish the filing date of the application.
National Stage of an International Application under 35 U.S.C. 371
If a timely submission to enter the national stage of an international application is compliant with the conditions of 35 U.S.C. 371 and other applicable requirements a Form PCT/DO/EO/903 indicating acceptance of the application as a national stage submission under 35 U.S.C. 371 will be issued in addition to the Filing Receipt, in due course.
New International Application Filed with the USPTO as a Receiving Office
If a new international application is being filed and the international application includes the necessary components for an international filing date (see PCT Article 11 and MPEP 1810), a Notification of the International Application Number and of the International Filing Date (Form PCT/RO/105) will be issued in due course, subject to prescriptions concerning national security, and the date shown on this Acknowledgement Receipt will establish the international filing date of the application.

UNITED STATES PATENT AND TRADEMARK OFFICE

UNITED STATES DEPARTMENT OF COMMERCE
United States Patent and Trademark Office
Address: COMMISSIONER FOR PATENTS
P.O. Box 1450
Alexandria, Virginia 22313-1450
www.uspto.gov

APPLICATION NUMBER	FILING OR 371(C) DATE	FIRST NAMED APPLICANT	ATTY. DOCKET NO./TITLE
17/371,839	07/09/2021	G.R. MOHAN RAO	GRTD60-35314

CONFIRMATION NO. 2197

25883
MUNCK WILSON MANDALA L.L.P
P.O. Drawer 800889
DALLAS, TX 75380

PUBLICATION NOTICE

OC000000129896952

Title:SEMICONDUCTOR DEVICES WITH GRADED DOPANT REGIONS

Publication No.US-2021-0359086-A1
Publication Date:11/18/2021

NOTICE OF PUBLICATION OF APPLICATION

The above-identified application will be electronically published as a patent application publication pursuant to 37 CFR 1.211, et seq. The patent application publication number and publication date are set forth above.

The publication may be accessed through the USPTO's publically available Searchable Databases via the Internet at www.uspto.gov. The direct link to access the publication is currently http://www.uspto.gov/patft/.

The publication process established by the Office does not provide for mailing a copy of the publication to applicant. A copy of the publication may be obtained from the Office upon payment of the appropriate fee set forth in 37 CFR 1.19(a)(1). Orders for copies of patent application publications are handled by the USPTO's Public Records Division. The Public Records Division can be reached by telephone at (571) 272-3150 or (800) 972-6382, by facsimile at (571) 273-3250, by mail addressed to the United States Patent and Trademark Office, Public Records Division, Alexandria, VA 22313-1450 or via the Internet.

In addition, information on the status of the application, including the mailing date of Office actions and the dates of receipt of correspondence filed in the Office, may also be accessed via the Internet through the Patent Electronic Business Center at www.uspto.gov using the public side of the Patent Application Information and Retrieval (PAIR) system. The direct link to access this status information is currently https://portal.uspto.gov/pair/PublicPair. Prior to publication, such status information is confidential and may only be obtained by applicant using the private side of PAIR.

Further assistance in electronically accessing the publication, or about PAIR, is available by calling the Patent Electronic Business Center at 1-866-217-9197.

Office of Data Managment, Application Assistance Unit (571) 272-4000, or (571) 272-4200, or 1-888-786-0101

UNITED STATES PATENT AND TRADEMARK OFFICE

UNITED STATES DEPARTMENT OF COMMERCE
United States Patent and Trademark Office
Address: COMMISSIONER FOR PATENTS
P.O. Box 1450
Alexandria, Virginia 22313-1450
www.uspto.gov

APPLICATION NO.	FILING DATE	FIRST NAMED INVENTOR	ATTORNEY DOCKET NO.	CONFIRMATION NO.
17/371,839	07/09/2021	G.R. MOHAN RAO	GRTD60-35314	2197

25883 7590 10/28/2021
MUNCK WILSON MANDALA L.L.P
P.O. Drawer 800889
DALLAS, TX 75380

EXAMINER
ARORA, AJAY

ART UNIT	PAPER NUMBER
2892	

NOTIFICATION DATE	DELIVERY MODE
10/28/2021	ELECTRONIC

Please find below and/or attached an Office communication concerning this application or proceeding.

The time period for reply, if any, is set in the attached communication.

Notice of the Office communication was sent electronically on above-indicated "Notification Date" to the following e-mail address(es):

IPdocketing@munckwilson.com
admin@dalpat.com
eofficeaction@appcoll.com

Office Action Summary	Application No. 17/371,839	Applicant(s) RAO, G.R. MOHAN	
	Examiner AJAY ARORA	Art Unit 2892	AIA (FITF) Status No

-- The MAILING DATE of this communication appears on the cover sheet with the correspondence address --

Period for Reply

A SHORTENED STATUTORY PERIOD FOR REPLY IS SET TO EXPIRE 3 MONTHS FROM THE MAILING DATE OF THIS COMMUNICATION.

- Extensions of time may be available under the provisions of 37 CFR 1.136(a). In no event, however, may a reply be timely filed after SIX (6) MONTHS from the mailing date of this communication.
- If NO period for reply is specified above, the maximum statutory period will apply and will expire SIX (6) MONTHS from the mailing date of this communication.
- Failure to reply within the set or extended period for reply will, by statute, cause the application to become ABANDONED (35 U.S.C. § 133). Any reply received by the Office later than three months after the mailing date of this communication, even if timely filed, may reduce any earned patent term adjustment. See 37 CFR 1.704(b).

Status

1)☑ Responsive to communication(s) filed on 7/9/2021.

☐ A declaration(s)/affidavit(s) under **37 CFR 1.130(b)** was/were filed on _____.

2a)☐ This action is **FINAL.** 2b) ☑ This action is non-final.

3)☐ An election was made by the applicant in response to a restriction requirement set forth during the interview on _____; the restriction requirement and election have been incorporated into this action.

4)☐ Since this application is in condition for allowance except for formal matters, prosecution as to the merits is closed in accordance with the practice under *Ex parte Quayle*, 1935 C.D. 11, 453 O.G. 213.

Disposition of Claims*

5) ☑ Claim(s) 1-30 is/are pending in the application.

5a) Of the above claim(s) _____ is/are withdrawn from consideration.

6) ☐ Claim(s) _____ is/are allowed.

7) ☑ Claim(s) 1-30 is/are rejected.

8) ☐ Claim(s) _____ is/are objected to.

9) ☐ Claim(s) _____ are subject to restriction and/or election requirement

* If any claims have been determined allowable, you may be eligible to benefit from the **Patent Prosecution Highway** program at a participating intellectual property office for the corresponding application. For more information, please see http://www.uspto.gov/patents/init_events/pph/index.jsp or send an inquiry to **PPHfeedback@uspto.gov.**

Application Papers

10)☐ The specification is objected to by the Examiner.

11)☑ The drawing(s) filed on 8/11/2021 is/are: a)☑ accepted or b)☐ objected to by the Examiner.

Applicant may not request that any objection to the drawing(s) be held in abeyance. See 37 CFR 1.85(a).

Replacement drawing sheet(s) including the correction is required if the drawing(s) is objected to. See 37 CFR 1.121(d).

Priority under 35 U.S.C. § 119

12)☐ Acknowledgment is made of a claim for foreign priority under 35 U.S.C. § 119(a)-(d) or (f).

Certified copies:

a)☐ All b)☐ Some** c)☐ None of the:

1.☐ Certified copies of the priority documents have been received.

2.☐ Certified copies of the priority documents have been received in Application No. _____.

3.☐ Copies of the certified copies of the priority documents have been received in this National Stage application from the International Bureau (PCT Rule 17.2(a)).

** See the attached detailed Office action for a list of the certified copies not received.

Attachment(s)

1) ☑ Notice of References Cited (PTO-892)

2) ☑ Information Disclosure Statement(s) (PTO/SB/08a and/or PTO/SB/08b) Paper No(s)/Mail Date 8/13/2021.

3) ☐ Interview Summary (PTO-413) Paper No(s)/Mail Date _____.

4) ☐ Other: _____.

DETAILED ACTION

Notice of Pre-AIA or AIA Status

1. The present application is being examined under the pre-AIA first to invent provisions.

Double Patenting

2. A rejection based on double patenting of the "same invention" type finds its support in the language of 35 U.S.C. 101 which states that "whoever invents or discovers any new and useful process... may obtain a patent therefor..." (Emphasis added). Thus, the term "same invention," in this context, means an invention drawn to identical subject matter. See *Miller v. Eagle Mfg. Co.*, 151 U.S. 186 (1894); *In re Vogel*, 422 F.2d 438, 164 USPQ 619 (CCPA 1970); *In re Ockert*, 245 F.2d 467, 114 USPQ 330 (CCPA 1957).

A statutory type (35 U.S.C. 101) double patenting rejection can be overcome by canceling or amending the claims that are directed to the same invention so they are no longer coextensive in scope. The filing of a terminal disclaimer cannot overcome a double patenting rejection based upon 35 U.S.C. 101.

3. Claims 1-30, respectively, are provisionally rejected under 35 U.S.C. 101 as claiming the same invention as that of claims 1-30, respectively, of copending Application No. 16/947,294 (reference application). This is a <u>provisional</u> statutory double patenting rejection since the claims directed to the same invention have not in fact been

patented (although a Notice of Allowance for application 16/947,294 dated 8/11/2021 has been issued, a patent has not yet been issued).

Art Based Rejection

4. No art based rejection has been provided, as the prior art does not teach or suggest the features of claims 1-30. The closest prior art is Hong (US 2007/0045682), hereinafter Hong, especially see Figures 4A-4D and 5A-5C and para 26-32 (as also explained in Notice of Allowance of 8/11/2021 for parent application 16/947,294).

Conclusion

5. Any inquiry concerning this communication or earlier communications from the examiner should be directed to AJAY ARORA whose telephone number is (571)272-8347. The examiner can normally be reached 9 AM - 5 PM.

Examiner interviews are available via telephone, in-person, and video conferencing using a USPTO supplied web-based collaboration tool. To schedule an interview, applicant is encouraged to use the USPTO Automated Interview Request (AIR) at http://www.uspto.gov/interviewpractice.

If attempts to reach the examiner by telephone are unsuccessful, the examiner's supervisor, Thao X. Le can be reached on 5712721708. The fax phone number for the organization where this application or proceeding is assigned is 571-273-8300.

Information regarding the status of published or unpublished applications may be obtained from Patent Center. Unpublished application information in Patent Center is available to registered users. To file and manage patent submissions in Patent Center,

visit: https://patentcenter.uspto.gov. Visit https://www.uspto.gov/patents/apply/patent-center for more information about Patent Center and https://www.uspto.gov/patents/docx for information about filing in DOCX format. For additional questions, contact the Electronic Business Center (EBC) at 866-217-9197 (toll-free). If you would like assistance from a USPTO Customer Service Representative, call 800-786-9199 (IN USA OR CANADA) or 571-272-1000.

/AJAY ARORA/
Primary Examiner, Art Unit 2892

Notice of References Cited	Application/Control No. 17/371,839	Applicant(s)/Patent Under Reexamination RAO, G.R. MOHAN	
	Examiner AJAY ARORA	Art Unit 2892	Page 1 of 1

U.S. PATENT DOCUMENTS

*		Document Number Country Code-Number-Kind Code	Date MM-YYYY	Name	CPC Classification	US Classification
*	A	US-20070045682-A1	03-2007	Hong; Sungkwon C.	H01L27/14689	257/292
*	B	US-20140034997-A1	02-2014	RAHIMO; Munaf	H01L29/861	257/139
	C					
	D					
	E					
	F					
	G					
	H					
	I					
	J					
	K					
	L					
	M					

FOREIGN PATENT DOCUMENTS

*		Document Number Country Code-Number-Kind Code	Date MM-YYYY	Country	Name	CPC Classification
	N					
	O					
	P					
	Q					
	R					
	S					
	T					

NON-PATENT DOCUMENTS

*		Include as applicable: Author, Title Date, Publisher, Edition or Volume, Pertinent Pages)
	U	
	V	
	W	
	X	

*A copy of this reference is not being furnished with this Office action. (See MPEP § 707.05(a).)
Dates in MM-YYYY format are publication dates. Classifications may be US or foreign.

Search Notes	Application/Control No.	Applicant(s)/Patent Under Reexamination
	17/371,839	RAO, G.R. MOHAN
	Examiner	**Art Unit**
	AJAY ARORA	2892

CPC - Searched*		
Symbol	**Date**	**Examiner**
H01L 29/1095	10/23/2021	AKA

CPC Combination Sets - Searched*		
Symbol	**Date**	**Examiner**

US Classification - Searched*			
Class	**Subclass**	**Date**	**Examiner**
257	25	10/23/2021	AKA

* See search history printout included with this form or the SEARCH NOTES box below to determine the scope of the search.

Search Notes		
Search Notes	**Date**	**Examiner**
Inventor search	10/23/2021	AKA
Assignee search	10/23/2021	AKA
References for all parent applications (10/934,915; 11/622,496; 15/590,282; 16/717950 and 16/947294) considered	10/23/2021	AKA
.clm. interference search	10/23/2021	AKA
EAST search history report	10/23/2021	AKA

Interference Search			
US Class/CPC Symbol	**US Subclass/CPC Group**	**Date**	**Examiner**
H01L	29/1095	10/23/2021	AKA
257	25	10/23/2021	AKA

/AJAY ARORA/ Primary Examiner, Art Unit 2892	

Greenthread Ex. 2071, p. 99 of 211
Semiconductor v. Greenthread
IPR2023-01244

Search Notes	Application/Control No.	Applicant(s)/Patent Under Reexamination
	17/371,839	RAO, G.R. MOHAN
	Examiner	**Art Unit**
	AJAY ARORA	2892

/AJAY ARORA/ Primary Examiner, Art Unit 2892	

Greenthread Ex. 2071, p. 100 of 211
Semiconductor v. Greenthread
IPR2023-01244

Index of Claims	Application/Control No.	Applicant(s)/Patent Under Reexamination
	17/371,839	RAO, G.R. MOHAN
	Examiner	**Art Unit**
	AJAY ARORA	2892

✓	Rejected	-	Cancelled	N	Non-Elected	A	Appeal
=	Allowed	÷	Restricted	I	Interference	O	Objected

CLAIMS

☐ Claims renumbered in the same order as presented by applicant ☐ CPA ☐ T.D. ☐ R.1.47

CLAIM		DATE								
Final	Original	10/23/2021								
	1	✓								
	2	✓								
	3	✓								
	4	✓								
	5	✓								
	6	✓								
	7	✓								
	8	✓								
	9	✓								
	10	✓								
	11	✓								
	12	✓								
	13	✓								
	14	✓								
	15	✓								
	16	✓								
	17	✓								
	18	✓								
	19	✓								
	20	✓								
	21	✓								
	22	✓								
	23	✓								
	24	✓								
	25	✓								
	26	✓								
	27	✓								
	28	✓								
	29	✓								
	30	✓								

EAST Search History

EAST Search History (Prior Art)

Ref #	Hits	Search Query	DBs	Default Operator	Plurals	Time Stamp
L2	574	(source drain source/drain) and drift and ((gradient graded) near2 concentration near2 dop$3) and well	US-PGPUB; USPAT; USOCR; FPRS; EPO; JPO; DERWENT; IBM_TDB	OR	OFF	2021/10/23 15:37
L3	574	L2	US-PGPUB; USPAT; USOCR; FPRS; EPO; JPO; DERWENT; IBM_TDB	OR	OFF	2021/10/23 15:37
L4	1	("9647070").PN.	US-PGPUB; USPAT	OR	OFF	2021/10/23 16:21
L5	1	("6384431").PN.	US-PGPUB; USPAT	OR	OFF	2021/10/23 16:21
S1	0	17/371,839	US-PGPUB; USPAT; USOCR; FPRS; EPO; JPO; DERWENT; IBM_TDB	OR	OFF	2021/10/23 10:17
S2	31	((("GREENTHREAD") near3 ("LLC"))).AS,AANM.	US-PGPUB; USPAT; USOCR; FPRS; EPO; JPO; DERWENT; IBM_TDB	OR	ON	2021/10/23 10:18
S3	29	((("RAO") near3 ("G.R") near3 ("MOHAN"))).INV.	US-PGPUB; USPAT; USOCR; FPRS; EPO; JPO; DERWENT; IBM_TDB	OR	ON	2021/10/23 10:19
S4	30,065	H01L29/1095.cpc.	US-PGPUB; USPAT; USOCR; FPRS; EPO;	OR	OFF	2021/10/23 10:19

			JPO; DERWENT; IBM_TDB			
S5	669	(257/25).CCLS.	US-PGPUB; USPAT; USOCR; FPRS; EPO; JPO; DERWENT; IBM_TDB	OR	OFF	2021/10/23 10:19
S6	56	("20010028097" | "20020195656" | "20030183856" | "20070045682" | "20080142899" | "20140034997" | "20170243876" | "4160985" | "4684971" | "4688063" | "4907058" | "4994887" | "5835402" | "6025237" | "6384431" | "6465862").PN.	US-PGPUB; USPAT; USOCR; FPRS; EPO; JPO; DERWENT; IBM_TDB	OR	ON	2021/10/23 10:20
S7	29	("5448087" | "5888857" | "20030030488" | "6720622" | "20030026126" | "5973575" | "5262345" | "20040027753").PN.	US-PGPUB; USPAT; USOCR; FPRS; EPO; JPO; DERWENT; IBM_TDB	OR	OFF	2021/10/23 10:20
S8	12	(US-20040027753-$ or US-20030030488-$ or US-20140034997-$ or US-20060049464-$ or US-20030026126-$ or US-20070181927-$ or US-20070045682-$).did. or (US-5973575-$ or US-5262345-$ or US-5448087-$ or US-6720622-$ or US-5888857-$).did.	US-PGPUB; USPAT	OR	ON	2021/10/23 10:21
S9	47	("20020056883" | "20020084430" | "20020102783" | "20030042511" | "4160985" | "5637898" | "5517052" | "4481522" | "6831292" | "20020093281" | "5029277" | "20060113592" | "20020134419").PN.	US-PGPUB; USPAT; USOCR; FPRS; EPO; JPO; DERWENT; IBM_TDB	OR	OFF	2021/10/23 10:22
S10	118	("20020074585" | "5496746" | "6683343" | "6696314" | "6452086" | "6472715" | "6747883" | "5797999" | "6670544" | "20040063288" | "4347654" | "4866000" | "6744117" | "6754093" | "5213988" | "5569612" | "RE37441" | "4001864" | "6756616" | "5130262" | "5329144" | "6706550" | "6753202" | "5480816" | "6713813" | "6737722" | "5575862" | "6211028").PN.	US-PGPUB; USPAT; USOCR; FPRS; EPO; JPO; DERWENT; IBM_TDB	OR	OFF	2021/10/23 10:23

S11	255	("20020102783" | "20030026126" | "20030030488" | "6211028" | "6310366" | "6753202" | "7115925" | "8164124" | "6878603" | "20020056883" | "20020093281" | "20150200314" | "4347654" | "5496746" | "6452086" | "6737722" | "6747883" | "6780713" | "20030042511" | "5029277" | "5888857" | "6670544" | "6706550" | "6713813" | "6921943" | "7504692" | "20040027753" | "4160985" | "5448087" | "6472715" | "6683343" | "6831292" | "7307327" | "5569612" | "5575862" | "5637898" | "6720622" | "6744117" | "20070045682" | "20020134419" | "20060113592" | "20130001661" | "4481522" | "5262345" | "6756616" | "6933215" | "7233044" | "20010040622" | "20020074585" | "5130262" | "5213988" | "5329144" | "6465862" | "6696314" | "RE37441" | "20020084430" | "4001864" | "4866000" | "5480816" | "5517052" | "5797999" | "5973575" | "6754093" | "7064385" | "20120048462").PN.	US-PGPUB; USPAT; USOCR; FPRS; EPO; JPO; DERWENT; IBM_TDB	OR	OFF	2021/10/23 10:58
S12	271	("20020102783" | "20020134419" | "20070045682" | "6310366" | "RE37441" | "20040027753" | "20120048462" | "4160985" | "4347654" | "5213988" | "5575862" | "8164124" | "20130001661" | "5329144" | "5496746" | "5569612" | "5637898" | "5973575" | "6211028" | "6683343" | "6696314" | "6713813" | "6754093" | "7064385" | "20030030488" | "20070045682" | "4481522" | "6753202" | "20020056883" | "20020084430" | "20020093281" | "20030026126" | "20030042511" | "4001864" | "5130262" | "5262345" | "5448087" | "6472715" | "6670544" | "6720622" | "6780713" | "6921946" | "10510842" | "20010040622" | "20020074585" | "6465862" | "6747883" | "7233044" | "7307327" | "20030030488" | "20040063288" | "20060113592" | "20150200314" | "4866000" | "5029277" | "5480816" | "5517052" | "5797999" | "6452086" | "6706550" |	US-PGPUB; USPAT; USOCR; FPRS; EPO; JPO; DERWENT; IBM_TDB	OR	OFF	2021/10/23 10:59

		"6737722" | "6831292" | "6878603" | "7115925" | "9190502" | "9647070" | "5888857" | "6744117" | "6756616" | "6933215" | "7504692" | "8421195").PN.				
S13	316	("20020102783" | "20020134419" | "20070045682" | "6310366" | "RE37441" | "4907058" | "20040027753" | "20080142899" | "20120048462" | "4160985" | "4347654" | "5213988" | "5575862" | "8164124" | "20010028097" | "4994887" | "6025237" | "20130001661" | "5329144" | "5496746" | "5569612" | "5637898" | "5973575" | "6211028" | "6683343" | "6696314" | "6713813" | "6754093" | "7064385" | "20140034997" | "10734481" | "4481522" | "6753202" | "20020195656" | "20030183856" | "20020056883" | "20020084430" | "20020093281" | "20030026126" | "20030042511" | "4001864" | "5130262" | "5262345" | "5448087" | "6472715" | "6670544" | "6720622" | "6780713" | "6921946" | "20170243876" | "5835402" | "20070045682" | "10510842" | "20010040622" | "20020074585" | "20030183856" | "4684971" | "6465862" | "6747883" | "7233044" | "7307327" | "4688063" | "20030030488" | "20040063288" | "20060113592" | "20150200314" | "4866000" | "5029277" | "5480816" | "5517052" | "5797999" | "6452086" | "6706550" | "6737722" | "6831292" | "6878603" | "7115925" | "9190502" | "9647070" | "20080142899" | "6384431" | "5888857" | "6744117" | "6756616" | "6933215" | "7504692" | "8421195").PN.	US-PGPUB; USPAT; USOCR; FPRS; EPO; JPO; DERWENT; IBM_TDB	OR	OFF	2021/10/23 11:00
S14	319	S7 S9 S10 S11 S12 S13	US-PGPUB; USPAT; USOCR; FPRS; EPO; JPO; DERWENT; IBM_TDB	OR	OFF	2021/10/23 11:01
S15	10	S3 and drift	US-PGPUB; USPAT;	OR	OFF	2021/10/23 11:02

			USOCR; FPRS; EPO; JPO; DERWENT; IBM_TDB			
S16	14	S2 and drift	US-PGPUB; USPAT; USOCR; FPRS; EPO; JPO; DERWENT; IBM_TDB	OR	OFF	2021/10/23 11:02
S17	574	(source drain source/drain) and drift and ((gradient graded) near2 concentration near2 dop$3) and well	US-PGPUB; USPAT; USOCR; FPRS; EPO; JPO; DERWENT; IBM_TDB	OR	OFF	2021/10/23 11:03
S18	25,930	H01L27/11521.cpc.	US-PGPUB; USPAT; USOCR; FPRS; EPO; JPO; DERWENT; IBM_TDB	OR	ON	2021/10/23 11:03
S19	14,669	H01L27/11524.cpc.	US-PGPUB; USPAT; USOCR; FPRS; EPO; JPO; DERWENT; IBM_TDB	OR	ON	2021/10/23 11:04
S20	29,711	H01L27/14643.cpc.	US-PGPUB; USPAT; USOCR; FPRS; EPO; JPO; DERWENT; IBM_TDB	OR	ON	2021/10/23 11:04
S21	11,836	H01L29/36.cpc.	US-PGPUB; USPAT; USOCR; FPRS; EPO; JPO; DERWENT; IBM_TDB	OR	ON	2021/10/23 11:04
S22	13,097	H01L29/7395.cpc.	US-PGPUB; USPAT; USOCR;	OR	ON	2021/10/23 11:04

			FPRS; EPO; JPO; DERWENT; IBM_TDB			
S23	18	S4 and S18 and S21	US-PGPUB; USPAT; USOCR; FPRS; EPO; JPO; DERWENT; IBM_TDB	OR	ON	2021/10/23 11:08
S24	18	S4 and S18 and S20	US-PGPUB; USPAT; USOCR; FPRS; EPO; JPO; DERWENT; IBM_TDB	OR	ON	2021/10/23 11:10
S25	18	S4 and S19 and S20	US-PGPUB; USPAT; USOCR; FPRS; EPO; JPO; DERWENT; IBM_TDB	OR	ON	2021/10/23 11:10
S26	66	S4 and S19 and S21	US-PGPUB; USPAT; USOCR; FPRS; EPO; JPO; DERWENT; IBM_TDB	OR	ON	2021/10/23 11:10
S27	2	((source drain "source/drain" active) and drift and ((gradient graded) near2 concentration near2 dop$3) and well and ((no near2 active) (inactive))).clm.	US-PGPUB; USPAT; USOCR; FPRS; EPO; JPO; DERWENT; IBM_TDB	OR	OFF	2021/10/23 11:11
S28	32	((source drain "source/drain" active) and drift and ((gradient graded) near2 concentration near2 dop$3) and well and ((no near2 active) (inactive)))	US-PGPUB; USPAT; USOCR; FPRS; EPO; JPO; DERWENT; IBM_TDB	OR	OFF	2021/10/23 11:13

10/23/2021 4:35:05 PM
C:\Users\aarora\Documents\EAST\Workspaces\17371839.wsp

Doc code: IDS
Doc description: Information Disclosure Statement (IDS) Filed

PTO/SB/08a (02-18)
Approved for use through 11/30/2020. OMB 0651-0031
U.S. Patent and Trademark Office; U.S. DEPARTMENT OF COMMERCE
Under the Paperwork Reduction Act of 1995, no persons are required to respond to a collection of information unless it contains a valid OMB control number.

INFORMATION DISCLOSURE STATEMENT BY APPLICANT

(Not for submission under 37 CFR 1.99)

Application Number	17371839
Filing Date	2021-07-09
First Named Inventor	G.R. Mohan Rao
Art Unit	2812
Examiner Name	
Attorney Docket Number	GRTD60-35314

U.S.PATENTS Remove

Examiner Initial*	Cite No	Patent Number	Kind Code[1]	Issue Date	Name of Patentee or Applicant of cited Document	Pages,Columns,Lines where Relevant Passages or Relevant Figures Appear
/A.A/	1	4160985	A	1979-07-10	Kamins et al.	
/A.A/	2	4684971	A	1987-08-04	Payne	
/A.A/	3	4688063	A	1987-08-18	Lu et al.	
/A.A/	4	4907058	A	1990-03-06	Sakai	
/A.A/	5	4994887	A	1991-02-19	Hutter et al.	
/A.A/	6	5835402	A	1998-11-10	Rao et al.	
/A.A/	7	6025237	A	2000-02-15	Choi	
/A.A/	8	6384431	B1	2002-05-07	Takahashi et al.	

ALL REFERENCES CONSIDERED EXCEPT WHERE LINED THROUGH. /A.A/

INFORMATION DISCLOSURE STATEMENT BY APPLICANT (Not for submission under 37 CFR 1.99)		
	Application Number	17371839
	Filing Date	2021-07-09
	First Named Inventor	G.R. Mohan Rao
	Art Unit	2812
	Examiner Name	
	Attorney Docket Number	GRTD60-35314

/A.A/	9	6465862	B1	2002-10-15	Harris	

If you wish to add additional U.S. Patent citation information please click the Add button. Add

U.S.PATENT APPLICATION PUBLICATIONS Remove

Examiner Initial*	Cite No	Publication Number	Kind Code[1]	Publication Date	Name of Patentee or Applicant of cited Document	Pages,Columns,Lines where Relevant Passages or Relevant Figures Appear
/A.A/	1	20010028097	A1	2001-10-11	Matsuoka et al.	
/A.A/	2	20020195656	A1	2002-12-26	Hattori	
/A.A/	3	20030183856	A1	2003-10-02	Wieczorek et al.	
/A.A/	4	20070045682	A1	2007-03-01	Hong et al.	
/A.A/	5	20080142899	A1	2008-06-19	Morris et al.	
/A.A/	6	20140034997	A1	2014-02-06	Rahimo et al.	
/A.A/	7	20170243876	A1	2017-08-24	Rao	

If you wish to add additional U.S. Published Application citation information please click the Add button. Add

FOREIGN PATENT DOCUMENTS Remove

ALL REFERENCES CONSIDERED EXCEPT WHERE LINED THROUGH. /A.A/

INFORMATION DISCLOSURE STATEMENT BY APPLICANT

(Not for submission under 37 CFR 1.99)

Application Number	17371839
Filing Date	2021-07-09
First Named Inventor	G.R. Mohan Rao
Art Unit	2812
Examiner Name	
Attorney Docket Number	GRTD60-35314

Examiner Initial*	Cite No	Foreign Document Number[3]	Country Code[2] i	Kind Code[4]	Publication Date	Name of Patentee or Applicant of cited Document	Pages,Columns,Lines where Relevant Passages or Relevant Figures Appear	T[5]
/A.A/	1	2003051551	JP	A	2003-02-21	Miyamoto et al.		☒
/A.A/	2	2003218356	JP	A	2003-07-31	Matsumoto et al.		☒
/A.A/	3	s6482563	JP	A	1989-03-28	Kondo		☒
/A.A/	4	2004049453	WO	A1	2004-06-10	Zheng et al.		☒

If you wish to add additional Foreign Patent Document citation information please click the Add button Add

NON-PATENT LITERATURE DOCUMENTS Remove

Examiner Initials*	Cite No	Include name of the author (in CAPITAL LETTERS), title of the article (when appropriate), title of the item (book, magazine, journal, serial, symposium, catalog, etc), date, pages(s), volume-issue number(s), publisher, city and/or country where published.	T[5]
	1	IPR2020-00288-Exhibit 1029-Claim Construction District Court 4 20-2020	
	2	IPR2020-00288-Exhibit 2007-Minutes for Markman Hearing Held Via Video Conference Before U.S. District Judge Rodney Gilstrap, Greenthread, LLC v. Samsung Electronics Co., Ltd., et al., Case No. 2:19-CV-147-JRG, Dkt. 61	
	3	IPR2020-00288-Petitioner Reply	
	4	IPR2020-00289-00289 Petitioner Reply	

ALL REFERENCES CONSIDERED EXCEPT WHERE LINED THROUGH. /A.A/

INFORMATION DISCLOSURE STATEMENT BY APPLICANT (Not for submission under 37 CFR 1.99)		
	Application Number	17371839
	Filing Date	2021-07-09
	First Named Inventor	G.R. Mohan Rao
	Art Unit	2812
	Examiner Name	
	Attorney Docket Number	GRTD60-35314

	5	IPR2020-00292 - Petition for IPR	
	6	IPR2020-00292-Exhibit 2002-Excerpt from Exhibit 4 to Appendix B of Samsung Electronics Co., Ltd.'s Invalidity Contentions (Invalidity Contention based on U.S. Patent No. 6,384,431 to Takahashi	
	7	IPR2020-00288 - Ex. 1020 - Michael Nastasi and James W. Mayer, Ion Implantation and Synthesis of Materials (2006). 4 pages	
	8	IPR2020-00288-Exhibit 2001 - IPR2020-00288 - Excerpt from Exhibit 1 to Appendix A of Samsung Electronics Co., Ltd.'s Invalidity Contentions regarding Morris	
	9	IPR2020-00288-Exhibit 2002-xcerpt from Exhibit 2 to Appendix A of Samsung Electronics Co., Ltd.'s Invalidity Contentions regarding Miyamoto	
	10	IPR2020-00288-Exhibit 2009-Complaint for Patent Infringement, Greenthread, LLC v. Samsung Electronics Co., Ltd., et al., Case No. 2:19-CV-147-JRG, Dkt. 1	
	11	IPR2020-00288-Exhibit 2011- Exhibit A to Revised Joint Claim Construction Chart Pursuant to Patent Rule 4-5, Greenthread, LLC v. Samsung Electronics Co., Ltd., et al., Case No. 2:19-CV-147-JRG, Dkt. 60-1	
	12	IPR2020-00288-Exhibit 2012-Samsungs Responsive Claim Construction Brief - District Court	
	13	IPR2020-00288-Exhibit 2013- Glew Dec	
	14	IPR2020-00288-Exhibit 2014- Excerpt from Exhibit 10 to Appendix A of Samsung Electronics Co., Ltd.'s Invalidity Contentions	
	15	IPR2020-00288-Patent Owner Preliminary Response	

INFORMATION DISCLOSURE STATEMENT BY APPLICANT (Not for submission under 37 CFR 1.99)		
	Application Number	17371839
	Filing Date	2021-07-09
	First Named Inventor	G.R. Mohan Rao
	Art Unit	2812
	Examiner Name	
	Attorney Docket Number	GRTD60-35314

	16	IPR2020-00288-Patent Owner Sur Reply	
	17	IPR2020-00288-Petition	
	18	IPR2020-00289-Exhibit 1 to Appendix C of Samsung Electronics Co., Ltd.'s Invalidity Contentions regarding Payne	
	19	IPR2020-00289-Exhibit 1003-Smith Dec	
	20	IPR2020-00289-Exhibit 1010- S. M. Sze et al., Semiconductor Devices: Physics and Technology,John Wiley & Sons, 2nd Ed., 2002 ("Sze '02")	
	21	IPR2020-00289-Exhibit 1012-Ben G. Streetman, Solid State Electronic Devices, 2nd Ed., Prentice-Hall, 1980 ("Streetman")	
	22	IPR2020-00289-Exhibit 2001-Exhibit 1 to Appendix C of Samsung Electronics Co., Ltd.'s Invalidity Contentions regarding Payne	
	23	IPR2020-00289-Exhibit 2002- Exhibit 3 to Appendix C of Samsung Electronics Co., Ltd.'s Invalidity Contentions regarding Wieczorek	
	24	IPR2020-00289-Exhibit 2011-Behzad Razavi, Design of Analog CMOS Integrated Circuits, 2001 ("Razavi")	
	25	IPR2020-00289-Exhibit 2012-Excerpts from Wolf, S., Silicon Processing for the VLSI Era, Vol.4 - Deep-Submicron Process Technology (2002) ("Wolf Vol. 4")	
	26	IPR2020-00289-Exhibit 2013-Glew Dec	

ALL REFERENCES CONSIDERED EXCEPT WHERE LINED THROUGH. /A.A/

INFORMATION DISCLOSURE STATEMENT BY APPLICANT (Not for submission under 37 CFR 1.99)		
	Application Number	17371839
	Filing Date	2021-07-09
	First Named Inventor	G.R. Mohan Rao
	Art Unit	2812
	Examiner Name	
	Attorney Docket Number	GRTD60-35314

	27	IPR2020-00289-Patent Owner Pre Resp	
	28	IPR2020-00289-Patent Owner Sur reply	
	29	IPR2020-00289-Petition	
	30	IPR2020-00290-Exhibit 1003-Declaration of Dr. Bruce Smith	
	31	IPR2020-00290-Exhibit 1013-Tango, Mega bit Memory Technology	
	32	IPR2020-00290-Patent Owner Preliminary Resp	
	33	IPR2020-00290-Patent Owner Sur Reply	
	34	IPR2020-00290-Petition	
	35	IPR2020-00290-Petitioners Reply to Patent Owner Preliminary Response	
	36	IPR2020-00291-Exhibit 1003-Declaration of Dr. Bruce Smith	
	37	IPR2020-00291-Exhibit 1011- The Insulated Gate Bipolar Transistor: IGBT Theory and Design, Vinod Kumar Khanna, IEEE Press and Wiley-Interscience, 2003	

INFORMATION DISCLOSURE STATEMENT BY APPLICANT (Not for submission under 37 CFR 1.99)		
	Application Number	17371839
	Filing Date	2021-07-09
	First Named Inventor	G.R. Mohan Rao
	Art Unit	2812
	Examiner Name	
	Attorney Docket Number	GRTD60-35314

	38	IPR2020-00291-Exhibit 1020-S. M. Sze, Physics of Semiconductor Devices, Wiley-Interscience, 2nd Ed., 1981 ("Sze '81")	
	39	IPR2020-00291-Exhibit 1021-S. M. Sze, Semiconductor Devices: Physics and Technology, John Wiley & Sons, 2nd Ed., 2002 ("Sze '02")	
	40	IPR2020-00291-Exhibit 2001-Exhibit 2 to Appendix B of Samsung Electronics Co., LTD's Invalidity Contentions (Invalidity Contention based on U.S. Patent Application Publication No. 2002/0195656 ("Hattori"))	
	41	IPR2020-00291-Exhibit 2013- Declaration of Dr. Alexander D. Glew	
	42	IPR2020-00291-Patent Owner Preliminary Resp	
	43	IPR2020-00291-Patent Owner Sur Reply	
	44	IPR2020-00291-Petition	
	45	IPR2020-00291-Petitioners Reply	
	46	IPR2020-00292-Exhibit 1003-Declaration of Dr. Bruce Smith	
	47	IPR2020-00292-Exhibit 2001-Excerpt from Exhibit 1 to Appendix B of Samsung Electronics Co., Ltd.'s Invalidity Contentions (Invalidity Contention based on "Insulated Gate Bipolar Transistor IGBT Theory and Design" by Vinod Kumar Khanna	
	48	IPR2020-00292-Exhibit 2012-Excerpt from Exhibit A to Joint Claim Construction Chart Pursuant to Patent Rule 4-5, Greenthread, LLC v. Samsung Electronics Co., Ltd., et al., Case No. 2:19-CV-147-JRG, Dkt. 53-1 (Mar. 18, 2020)	

ALL REFERENCES CONSIDERED EXCEPT WHERE LINED THROUGH. /A.A/

INFORMATION DISCLOSURE STATEMENT BY APPLICANT (Not for submission under 37 CFR 1.99)	Application Number	17371839
	Filing Date	2021-07-09
	First Named Inventor	G.R. Mohan Rao
	Art Unit	2812
	Examiner Name	
	Attorney Docket Number	GRTD60-35314

	49	IPR2020-00292-Patent Owner Preliminary Response	

If you wish to add additional non-patent literature document citation information please click the Add button Add

EXAMINER SIGNATURE

Examiner Signature	/AJAY ARORA/	Date Considered	10/23/2021

*EXAMINER: Initial if reference considered, whether or not citation is in conformance with MPEP 609. Draw line through a citation if not in conformance and not considered. Include copy of this form with next communication to applicant.

[1] See Kind Codes of USPTO Patent Documents at www.USPTO.GOV or MPEP 901.04. [2] Enter office that issued the document, by the two-letter code (WIPO Standard ST.3). [3] For Japanese patent documents, the indication of the year of the reign of the Emperor must precede the serial number of the patent document. [4] Kind of document by the appropriate symbols as indicated on the document under WIPO Standard ST.16 if possible. [5] Applicant is to place a check mark here if English language translation is attached.

ALL REFERENCES CONSIDERED EXCEPT WHERE LINED THROUGH. /A.A/

Copies of non-patent literature documents listed not provided in current application but provided in parent application 16/947,294

INFORMATION DISCLOSURE STATEMENT BY APPLICANT (Not for submission under 37 CFR 1.99)		
	Application Number	17371839
	Filing Date	2021-07-09
	First Named Inventor	G.R. Mohan Rao
	Art Unit	2812
	Examiner Name	
	Attorney Docket Number	GRTD60-35314

CERTIFICATION STATEMENT

Please see 37 CFR 1.97 and 1.98 to make the appropriate selection(s):

That each item of information contained in the information disclosure statement was first cited in any communication from a foreign patent office in a counterpart foreign application not more than three months prior to the filing of the information disclosure statement. See 37 CFR 1.97(e)(1).

OR

☐ That no item of information contained in the information disclosure statement was cited in a communication from a foreign patent office in a counterpart foreign application, and, to the knowledge of the person signing the certification after making reasonable inquiry, no item of information contained in the information disclosure statement was known to any individual designated in 37 CFR 1.56(c) more than three months prior to the filing of the information disclosure statement. See 37 CFR 1.97(e)(2).

See attached certification statement.

The fee set forth in 37 CFR 1.17 (p) has been submitted herewith.

X A certification statement is not submitted herewith.

SIGNATURE

A signature of the applicant or representative is required in accordance with CFR 1.33, 10.18. Please see CFR 1.4(d) for the form of the signature.

Signature	/Gregory M. Howison, Reg. #30646/	Date (YYYY-MM-DD)	2021-08-11
Name/Print	Gregory M. Howison	Registration Number	30646

This collection of information is required by 37 CFR 1.97 and 1.98. The information is required to obtain or retain a benefit by the public which is to file (and by the USPTO to process) an application. Confidentiality is governed by 35 U.S.C. 122 and 37 CFR 1.14. This collection is estimated to take 1 hour to complete, including gathering, preparing and submitting the completed application form to the USPTO. Time will vary depending upon the individual case. Any comments on the amount of time you require to complete this form and/or suggestions for reducing this burden, should be sent to the Chief Information Officer, U.S. Patent and Trademark Office, U.S. Department of Commerce, P.O. Box 1450, Alexandria, VA 22313-1450. DO NOT SEND FEES OR COMPLETED FORMS TO THIS ADDRESS. **SEND TO: Commissioner for Patents, P.O. Box 1450, Alexandria, VA 22313-1450.**

Privacy Act Statement

The Privacy Act of 1974 (P.L. 93-579) requires that you be given certain information in connection with your submission of the attached form related to a patent application or patent. Accordingly, pursuant to the requirements of the Act, please be advised that: (1) the general authority for the collection of this information is 35 U.S.C. 2(b)(2); (2) furnishing of the information solicited is voluntary; and (3) the principal purpose for which the information is used by the U.S. Patent and Trademark Office is to process and/or examine your submission related to a patent application or patent. If you do not furnish the requested information, the U.S. Patent and Trademark Office may not be able to process and/or examine your submission, which may result in termination of proceedings or abandonment of the application or expiration of the patent.

The information provided by you in this form will be subject to the following routine uses:

1. The information on this form will be treated confidentially to the extent allowed under the Freedom of Information Act (5 U.S.C. 552) and the Privacy Act (5 U.S.C. 552a). Records from this system of records may be disclosed to the Department of Justice to determine whether the Freedom of Information Act requires disclosure of these record s.

2. A record from this system of records may be disclosed, as a routine use, in the course of presenting evidence to a court, magistrate, or administrative tribunal, including disclosures to opposing counsel in the course of settlement negotiations.

3. A record in this system of records may be disclosed, as a routine use, to a Member of Congress submitting a request involving an individual, to whom the record pertains, when the individual has requested assistance from the Member with respect to the subject matter of the record.

4. A record in this system of records may be disclosed, as a routine use, to a contractor of the Agency having need for the information in order to perform a contract. Recipients of information shall be required to comply with the requirements of the Privacy Act of 1974, as amended, pursuant to 5 U.S.C. 552a(m).

5. A record related to an International Application filed under the Patent Cooperation Treaty in this system of records may be disclosed, as a routine use, to the International Bureau of the World Intellectual Property Organization, pursuant to the Patent Cooperation Treaty.

6. A record in this system of records may be disclosed, as a routine use, to another federal agency for purposes of National Security review (35 U.S.C. 181) and for review pursuant to the Atomic Energy Act (42 U.S.C. 218(c)).

7. A record from this system of records may be disclosed, as a routine use, to the Administrator, General Services, or his/her designee, during an inspection of records conducted by GSA as part of that agency's responsibility to recommend improvements in records management practices and programs, under authority of 44 U.S.C. 2904 and 2906. Such disclosure shall be made in accordance with the GSA regulations governing inspection of records for this purpose, and any other relevant (i.e., GSA or Commerce) directive. Such disclosure shall not be used to make determinations about individuals.

8. A record from this system of records may be disclosed, as a routine use, to the public after either publication of the application pursuant to 35 U.S.C. 122(b) or issuance of a patent pursuant to 35 U.S.C. 151. Further, a record may be disclosed, subject to the limitations of 37 CFR 1.14, as a routine use, to the public if the record was filed in an application which became abandoned or in which the proceedings were terminated and which application is referenced by either a published application, an application open to public inspections or an issued patent.

9. A record from this system of records may be disclosed, as a routine use, to a Federal, State, or local law enforcement agency, if the USPTO becomes aware of a violation or potential violation of law or regulation.

IN THE UNITED STATES PATENT AND TRADEMARK OFFICE

In re application of:	G.R. Mohan RAO
Serial No.:	17/371,839
Confirmation No.:	2197
Filed:	July 9, 2021
Group:	2892
Examiner:	Ajay ARORA
For:	SEMICONDUCTOR DEVICES WITH GRADED DOPANT REGIONS

Mail Stop Petitions
Commissioner for Patents
P.O. Box 1450
Alexandria, VA 22313-1450

Dear Sir:

PETITION TO EXPUNGE ASSIGNMENT RECORDING

Petitioner respectfully petitions to suspend the rules under 37 C.F.R. § 1.182 and requests that Assignment: 2, i.e., from Greenthread, LLC to Vervain, LLC be deleted to reflect the correct ownership of the patent. The reasons why justice requires a waiver of the requirements are as follows:

- The normal corrective procedures as outlined in MPEP § 323.01(a) through § 323.01(c) will not provide petitioners with adequate relief.
- An assignment totally unrelated to the current application was incorrectly recorded in the application. (A copy of the recorded Assignment document is attached)
- The assignment recordation error is not of a typographical nature; thus, MPEP § 323.01(a) does not apply.
- The recorded assignment document does not contain a typographical error and, additionally, matches the cover sheet. As such, MPEP § 323.01(b) does not apply.
- The assignment was not improperly filed and recorded by another person against the current Application. Therefore, MPEP § 323.01(c) does not apply.

Greenthread Ex. 2071, p. 119 of 211
Semiconductor v. Greenthread
IPR2023-01244

Thus,

- There never existed an assignment from Greenthread, LLC to Vervain, LLC with respect to U.S. Application No. 17/371,839 or any applications or patents related to it. (A copy of the USPTO Parent Continuity Data is attached.)
- The recorded assignment is void and should be expunged from the record.
- No right, title or interest was transferred to any existing entity as the result of this recorded document.
- All right, title and interest remain as originally recorded, from inventor G.R. Mohan Rao to Greenthread, LLC.
- There was no intent to assign the patent from Greenthread, LLC to Vervain, LLC, and such recordation was made in error.

For the reasons set forth above, Petitioner respectfully requests that this Petition be granted. Petitioner submits that the integrity of the assignment records will not be affected by the granting of the petition.

Accordingly, Petitioner requests expunction of the recorded assignment from Greenthread, LLC to Vervain, LLC such that all right, title and interest remain in Greenthread, LLC.

Enclosed is the fee of $420.00 as set forth under C.F.R. 1.17(f). Please charge any deficiency or credit any overpayment to deposit account number 50-0208/GRTD60-35314 of MUNCK, WILSON, MANDALA, LLP.

Respectfully submitted,
MUNCK, WILSON, MANDALA, LLP
Attorneys for Petitioners

/Gregory M. Howison, Reg. #30646/

Gregory M. Howison
Registration No. 30,646

GMH/als
P.O. Drawer 800889
Dallas, Texas 75380
Tel: 972-628-3600
Fax: 972-628-3616
October 19, 2021

ASSIGNOR	ASSIGNEE
Greenthread, LLC	Vervain, LLC
Philip W. John, Jr. Manager	Philip W. John, Jr., Member
6307 Bandera Ave, Apt B	7424 Mason Dells Drive
Dallas, Texas 75225-3617	Dallas, Texas 75230-3244
Email: john@greenthreadllc.com	Email: john@vervainllc.com

ASSIGNMENT AGREEMENT

This Assignment Agreement ("Assignment") is entered into by and between Vervain, LLC, a Texas limited liability company, hereinafter referred to as "Assignee," and Greenthread, LLC, a Texas limited liability company, hereinafter referred to as "Assignor," and shall become effective upon being duly signed by the authorized representative of Assignor ("Effective Date").

RECITALS:

Assignor and Assignee are entering into a Patent Assignment Agreement (the "Agreement").
Pursuant to the Agreement, Assignor hereby desires to assign to Assignee all of its rights, title and interest in and to the following United States patents and pending application:

1. U.S. Provisional Application Number 61/509,256, entitled, "Lifetime Mixed Level Nand Flash System," filed on July 19,2011;

2. U.S. Patent Number 8,891,298, entitled, "Lifetime Mixed Level Non-Volatile Memory System," filed on April 25, 2012, and issued on November 18, 2014;

3. U.S. Patent Number 9,196,385, entitled, "Lifetime Mixed Level Non-Volatile Memory System," filed on Octber 28, 2014, and issued on November 24, 2015;

4. U.S. Patent Number 9,997,240, entitled, "Lifetime Mixed Level Non-Volatile Memory System," filed on November 24, 2015, and issued on June 12, 2018, and

5. U.S. Patent Application Number 16/006,299, entitled, "Lifetime Mixed Level Non-Volatile Memory System," filed on June 12, 2018, and is pending (collectively referred to hereinafter referred to as the "Patent").

For good and valuable consideration, Assignor and Assignee hereby agree as follows:

ASSIGNMENT:

1. Assignor hereby assigns to Assignee its entire worldwide right, title and interest in and to Assignor's Patent, including the entire worldwide right, title and interest in and to any reexamination or reissue of the Patent. This includes, without limitation, Assignor's right to prosecute, and receive, all damages, royalties, awards and compensation for past, present and/or future infringement.

2. Assignor agrees to do the following without further consideration, in order to carry out the intent of this Assignment:

   i. Execute all oaths, assignments, applications, and other papers necessary or desirable to fully secure to Assignee the rights, titles and interests herein conveyed; and

   ii. Generally do all lawful acts for vesting in Assignee the rights, titles, and interests herein conveyed.

3. Assignor has not made and will not hereafter make any assignment, grant, mortgage, license, or other agreement affecting the rights, titles, and interests herein conveyed to Assignee.

4. Assignor hereby represents and warrants that Assignor has the authority to assign the applicable Patent pursuant to this Assignment.

The undersigned having read this Assignment and fully understanding the provisions of this Assignment, hereby executes this Assignment as of the Effective Date.

Greenthread, LLC (Assignor)
Philip W. John, Jr. Manager

Philip W. John Jr.

Signature:
Printed Name: Philip W. John, Jr.
Date: August 9, 2019

17/371,839	SEMICONDUCTOR DEVICES WITH GRADED DOPANT REGIONS	GRTD80-35314	10-06-2021::12:46:45

Parent Continuity Data

Description	Parent Number	Parent Filing or 371(c) Date	AIA (First Inventor to File)	Parent Status	Patent Number
This application is a Continuation of	16/947,294	07-27-2020	No	Patented	11,121,222
is a continuation of	16/717,950	12-17-2019	No	Patented	10,734,481
is a continuation of	15/590,282	05-09-2017	No	Patented	10,510,842
is a continuation of	14/931,636	11-03-2015	No	Patented	9,647,070
is a continuation of	14/515,584	10-16-2014	No	Patented	9,190,502
is a continuation of	13/854,319	04-01-2013	No	Abandoned	-
is a continuation of	11/622,496	01-12-2007	No	Patented	8,421,195
is a Division of	10/934,915	09-03-2004	No	Abandoned	-

Child Continuity Data

No Child Continuity Data Found

Close Window

Electronic Patent Application Fee Transmittal

Application Number:	17371839
Filing Date:	09-Jul-2021
Title of Invention:	SEMICONDUCTOR DEVICES WITH GRADED DOPANT REGIONS
First Named Inventor/Applicant Name:	G.R. MOHAN RAO
Filer:	Gregory Michael Howison/Anna Nguyen
Attorney Docket Number:	GRTD60-35314

Filed as Large Entity

Filing Fees for Utility under 35 USC 111(a)

Description	Fee Code	Quantity	Amount	Sub-Total in USD($)
Basic Filing:				
Pages:				
Claims:				
Miscellaneous-Filing:				
Petition:				
PETITION FEE- 37 CFR 1.17(F) (GROUP I)	1462	1	420	420
Patent-Appeals-and-Interference:				
Post-Allowance-and-Post-Issuance:				

Description	Fee Code	Quantity	Amount	Sub-Total in USD($)
Extension-of-Time:				
Miscellaneous:				
			Total in USD ($)	**420**

Electronic Acknowledgement Receipt

EFS ID:	44060872
Application Number:	17371839
International Application Number:	
Confirmation Number:	2197
Title of Invention:	SEMICONDUCTOR DEVICES WITH GRADED DOPANT REGIONS
First Named Inventor/Applicant Name:	G.R. MOHAN RAO
Customer Number:	25883
Filer:	Gregory Michael Howison
Filer Authorized By:	
Attorney Docket Number:	GRTD60-35314
Receipt Date:	19-OCT-2021
Filing Date:	09-JUL-2021
Time Stamp:	11:10:49
Application Type:	Utility under 35 USC 111(a)

Payment information:

Submitted with Payment	yes
Payment Type	DA
Payment was successfully received in RAM	$420
RAM confirmation Number	E20210IB11500206
Deposit Account	500208
Authorized User	Gregory Howison

The Director of the USPTO is hereby authorized to charge indicated fees and credit any overpayment as follows:

37 CFR 1.21 (Miscellaneous fees and charges)

37 CFR 1.20 (Post Issuance fees)

37 CFR 1.17 (Patent application and reexamination processing fees)

File Listing:

Document Number	Document Description	File Name	File Size(Bytes)/ Message Digest	Multi Part /.zip	Pages (if appl.)
1	Petition for review by the Office of Petitions	GRT35314PetitiontoExpunge.pdf	1713018 c055f20e57ec2274e0cd97b77d2df6f98953b462	no	5
Warnings:					
Information:					
2	Fee Worksheet (SB06)	fee-info.pdf	38237 ffd80fae29ff2a114a9e9cd93834d8403b477dbc	no	2
Warnings:					
Information:					
		Total Files Size (in bytes):	1751255		

This Acknowledgement Receipt evidences receipt on the noted date by the USPTO of the indicated documents, characterized by the applicant, and including page counts, where applicable. It serves as evidence of receipt similar to a Post Card, as described in MPEP 503.

New Applications Under 35 U.S.C. 111
If a new application is being filed and the application includes the necessary components for a filing date (see 37 CFR 1.53(b)-(d) and MPEP 506), a Filing Receipt (37 CFR 1.54) will be issued in due course and the date shown on this Acknowledgement Receipt will establish the filing date of the application.
National Stage of an International Application under 35 U.S.C. 371
If a timely submission to enter the national stage of an international application is compliant with the conditions of 35 U.S.C. 371 and other applicable requirements a Form PCT/DO/EO/903 indicating acceptance of the application as a national stage submission under 35 U.S.C. 371 will be issued in addition to the Filing Receipt, in due course.
New International Application Filed with the USPTO as a Receiving Office
If a new international application is being filed and the international application includes the necessary components for an international filing date (see PCT Article 11 and MPEP 1810), a Notification of the International Application Number and of the International Filing Date (Form PCT/RO/105) will be issued in due course, subject to prescriptions concerning national security, and the date shown on this Acknowledgement Receipt will establish the international filing date of the application.

UNITED STATES PATENT AND TRADEMARK OFFICE

UNITED STATES DEPARTMENT OF COMMERCE
United States Patent and Trademark Office
Address: COMMISSIONER FOR PATENTS
P.O. Box 1450
Alexandria, Virginia 22313-1450
www.uspto.gov

APPLICATION NO.	FILING DATE	FIRST NAMED INVENTOR	ATTORNEY DOCKET NO.	CONFIRMATION NO.
17/371,839	07/09/2021	G.R. MOHAN RAO	GRTD60-35314	2197

25883 7590 10/05/2021
MUNCK WILSON MANDALA L.L.P
P.O. Drawer 800889
DALLAS, TX 75380

EXAMINER
CENTRAL, DOCKET

ART UNIT	PAPER NUMBER
OPAP	

NOTIFICATION DATE	DELIVERY MODE
10/05/2021	ELECTRONIC

Please find below and/or attached an Office communication concerning this application or proceeding.

The time period for reply, if any, is set in the attached communication.

Notice of the Office communication was sent electronically on above-indicated "Notification Date" to the following e-mail address(es):

IPdocketing@munckwilson.com
admin@dalpat.com
eofficeaction@appcoll.com

Decision Granting Request for Prioritized Examination (Track I)	**Application No.** 17/371,839	**Applicant(s)** RAO, G.R. MOHAN	
	Examiner APRIL M WISE	**Art Unit** OPET	**AIA (FITF) Status** No

1. THE REQUEST FILED 09 July 2021 IS **GRANTED** .

   The above-identified application has met the requirements for prioritized examination
   A. ☑ for an original nonprovisional application (Track I).
   B. ☐ for an application undergoing continued examination (RCE).

2. **The above-identified application will undergo prioritized examination**. The application will be accorded special status throughout its entire course of prosecution until one of the following occurs:

   A. filing a **petition for extension of time** to extend the time period for filing a reply;

   B. filing an **amendment to amend the application to contain more than four independent claims, more than thirty total claims** , or a multiple dependent claim;

   C. filing a **request for continued examination** ;

   D. filing a notice of appeal;

   E. filing a request for suspension of action;

   F. mailing of a notice of allowance;

   G. mailing of a final Office action;

   H. completion of examination as defined in 37 CFR 41.102; or

   I. abandonment of the application.

Telephone inquiries with regard to this decision should be directed to undersigned at (571)272-1642.

In his/her absence, calls may be directed to Petition Help Desk at (571) 272-3282.

/APRIL M WISE/ Paralegal Specialist, Office of Petitions	

U.S. Patent and Trademark Office
PTO-2298 (Rev. 02-2012)

PTO/SB/08a (02-18)
Approved for use through 11/30/2020. OMB 0651-0031
U.S. Patent and Trademark Office; U.S. DEPARTMENT OF COMMERCE
Under the Paperwork Reduction Act of 1995, no persons are required to respond to a collection of information unless it contains a valid OMB control number.

INFORMATION DISCLOSURE STATEMENT BY APPLICANT

(Not for submission under 37 CFR 1.99)

Application Number	17371839
Filing Date	2021-07-09
First Named Inventor	G.R. Mohan Rao
Art Unit	2812
Examiner Name	
Attorney Docket Number	GRTD60-35314

U.S.PATENTS Remove

Examiner Initial*	Cite No	Patent Number	Kind Code[1]	Issue Date	Name of Patentee or Applicant of cited Document	Pages,Columns,Lines where Relevant Passages or Relevant Figures Appear
	1	4160985	A	1979-07-10	Kamins et al.	
	2	4684971	A	1987-08-04	Payne	
	3	4688063	A	1987-08-18	Lu et al.	
	4	4907058	A	1990-03-06	Sakai	
	5	4994887	A	1991-02-19	Hutter et al.	
	6	5835402	A	1998-11-10	Rao et al.	
	7	6025237	A	2000-02-15	Choi	
	8	6384431	B1	2002-05-07	Takahashi et al.	

INFORMATION DISCLOSURE STATEMENT BY APPLICANT (Not for submission under 37 CFR 1.99)		
	Application Number	17371839
	Filing Date	2021-07-09
	First Named Inventor	G.R. Mohan Rao
	Art Unit	2812
	Examiner Name	
	Attorney Docket Number	GRTD60-35314

	9	6465862	B1	2002-10-15	Harris	

If you wish to add additional U.S. Patent citation information please click the Add button. Add

U.S.PATENT APPLICATION PUBLICATIONS Remove

Examiner Initial*	Cite No	Publication Number	Kind Code[1]	Publication Date	Name of Patentee or Applicant of cited Document	Pages,Columns,Lines where Relevant Passages or Relevant Figures Appear
	1	20010028097	A1	2001-10-11	Matsuoka et al.	
	2	20020195656	A1	2002-12-26	Hattori	
	3	20030183856	A1	2003-10-02	Wieczorek et al.	
	4	20070045682	A1	2007-03-01	Hong et al.	
	5	20080142899	A1	2008-06-19	Morris et al.	
	6	20140034997	A1	2014-02-06	Rahimo et al.	
	7	20170243876	A1	2017-08-24	Rao	

If you wish to add additional U.S. Published Application citation information please click the Add button. Add

FOREIGN PATENT DOCUMENTS Remove

INFORMATION DISCLOSURE STATEMENT BY APPLICANT (Not for submission under 37 CFR 1.99)		
	Application Number	17371839
	Filing Date	2021-07-09
	First Named Inventor	G.R. Mohan Rao
	Art Unit	2812
	Examiner Name	
	Attorney Docket Number	GRTD60-35314

Examiner Initial*	Cite No	Foreign Document Number[3]	Country Code[2] i	Kind Code[4]	Publication Date	Name of Patentee or Applicant of cited Document	Pages,Columns,Lines where Relevant Passages or Relevant Figures Appear	T[5]
	1	2003051551	JP	A	2003-02-21	Miyamoto et al.		☒
	2	2003218356	JP	A	2003-07-31	Matsumoto et al.		☒
	3	s6482563	JP	A	1989-03-28	Kondo		☒
	4	2004049453	WO	A1	2004-06-10	Zheng et al.		☒

If you wish to add additional Foreign Patent Document citation information please click the Add button Add

NON-PATENT LITERATURE DOCUMENTS Remove

Examiner Initials*	Cite No	Include name of the author (in CAPITAL LETTERS), title of the article (when appropriate), title of the item (book, magazine, journal, serial, symposium, catalog, etc), date, pages(s), volume-issue number(s), publisher, city and/or country where published.	T[5]
	1	IPR2020-00288-Exhibit 1029-Claim Construction District Court 4 20-2020	
	2	IPR2020-00288-Exhibit 2007-Minutes for Markman Hearing Held Via Video Conference Before U.S. District Judge Rodney Gilstrap, Greenthread, LLC v. Samsung Electronics Co., Ltd., et al., Case No. 2:19-CV-147-JRG, Dkt. 61	
	3	IPR2020-00288-Petitioner Reply	
	4	IPR2020-00289-00289 Petitioner Reply	

INFORMATION DISCLOSURE STATEMENT BY APPLICANT (Not for submission under 37 CFR 1.99)	Application Number	17371839
	Filing Date	2021-07-09
	First Named Inventor	G.R. Mohan Rao
	Art Unit	2812
	Examiner Name	
	Attorney Docket Number	GRTD60-35314

	5	IPR2020-00292 - Petition for IPR	
	6	IPR2020-00292-Exhibit 2002-Excerpt from Exhibit 4 to Appendix B of Samsung Electronics Co., Ltd.'s Invalidity Contentions (Invalidity Contention based on U.S. Patent No. 6,384,431 to Takahashi	
	7	IPR2020-00288 - Ex. 1020 - Michael Nastasi and James W. Mayer, Ion Implantation and Synthesis of Materials (2006). 4 pages	
	8	IPR2020-00288-Exhibit 2001 - IPR2020-00288 - Excerpt from Exhibit 1 to Appendix A of Samsung Electronics Co., Ltd.'s Invalidity Contentions regarding Morris	
	9	IPR2020-00288-Exhibit 2002-xcerpt from Exhibit 2 to Appendix A of Samsung Electronics Co., Ltd.'s Invalidity Contentions regarding Miyamoto	
	10	IPR2020-00288-Exhibit 2009-Complaint for Patent Infringement, Greenthread, LLC v. Samsung Electronics Co., Ltd., et al., Case No. 2:19-CV-147-JRG, Dkt. 1	
	11	IPR2020-00288-Exhibit 2011- Exhibit A to Revised Joint Claim Construction Chart Pursuant to Patent Rule 4-5, Greenthread, LLC v. Samsung Electronics Co., Ltd., et al., Case No. 2:19-CV-147-JRG, Dkt. 60-1	
	12	IPR2020-00288-Exhibit 2012-Samsungs Responsive Claim Construction Brief - District Court	
	13	IPR2020-00288-Exhibit 2013- Glew Dec	
	14	IPR2020-00288-Exhibit 2014- Excerpt from Exhibit 10 to Appendix A of Samsung Electronics Co., Ltd.'s Invalidity Contentions	
	15	IPR2020-00288-Patent Owner Preliminary Response	

INFORMATION DISCLOSURE STATEMENT BY APPLICANT (Not for submission under 37 CFR 1.99)	Application Number	17371839
	Filing Date	2021-07-09
	First Named Inventor	G.R. Mohan Rao
	Art Unit	2812
	Examiner Name	
	Attorney Docket Number	GRTD60-35314

	16	IPR2020-00288-Patent Owner Sur Reply	
	17	IPR2020-00288-Petition	
	18	IPR2020-00289-Exhibit 1 to Appendix C of Samsung Electronics Co., Ltd.'s Invalidity Contentions regarding Payne	
	19	IPR2020-00289-Exhibit 1003-Smith Dec	
	20	IPR2020-00289-Exhibit 1010- S. M. Sze et al., Semiconductor Devices: Physics and Technology,John Wiley & Sons, 2nd Ed., 2002 ("Sze '02")	
	21	IPR2020-00289-Exhibit 1012-Ben G. Streetman, Solid State Electronic Devices, 2nd Ed., Prentice-Hall, 1980 ("Streetman")	
	22	IPR2020-00289-Exhibit 2001-Exhibit 1 to Appendix C of Samsung Electronics Co., Ltd.'s Invalidity Contentions regarding Payne	
	23	IPR2020-00289-Exhibit 2002- Exhibit 3 to Appendix C of Samsung Electronics Co., Ltd.'s Invalidity Contentions regarding Wieczorek	
	24	IPR2020-00289-Exhibit 2011-Behzad Razavi, Design of Analog CMOS Integrated Circuits, 2001 ("Razavi")	
	25	IPR2020-00289-Exhibit 2012-Excerpts from Wolf, S., Silicon Processing for the VLSI Era, Vol.4 - Deep-Submicron Process Technology (2002) ("Wolf Vol. 4")	
	26	IPR2020-00289-Exhibit 2013-Glew Dec	

INFORMATION DISCLOSURE STATEMENT BY APPLICANT (Not for submission under 37 CFR 1.99)	Application Number	17371839
	Filing Date	2021-07-09
	First Named Inventor	G.R. Mohan Rao
	Art Unit	2812
	Examiner Name	
	Attorney Docket Number	GRTD60-35314

	27	IPR2020-00289-Patent Owner Pre Resp	
	28	IPR2020-00289-Patent Owner Sur reply	
	29	IPR2020-00289-Petition	
	30	IPR2020-00290-Exhibit 1003-Declaration of Dr. Bruce Smith	
	31	IPR2020-00290-Exhibit 1013-Tango, Mega bit Memory Technology	
	32	IPR2020-00290-Patent Owner Preliminary Resp	
	33	IPR2020-00290-Patent Owner Sur Reply	
	34	IPR2020-00290-Petition	
	35	IPR2020-00290-Petitioners Reply to Patent Owner Preliminary Response	
	36	IPR2020-00291-Exhibit 1003-Declaration of Dr. Bruce Smith	
	37	IPR2020-00291-Exhibit 1011- The Insulated Gate Bipolar Transistor: IGBT Theory and Design, Vinod Kumar Khanna, IEEE Press and Wiley-Interscience, 2003	

INFORMATION DISCLOSURE STATEMENT BY APPLICANT (Not for submission under 37 CFR 1.99)	Application Number	17371839
	Filing Date	2021-07-09
	First Named Inventor	G.R. Mohan Rao
	Art Unit	2812
	Examiner Name	
	Attorney Docket Number	GRTD60-35314

	38	IPR2020-00291-Exhibit 1020-S. M. Sze, Physics of Semiconductor Devices, Wiley-Interscience, 2nd Ed., 1981 ("Sze '81")	
	39	IPR2020-00291-Exhibit 1021-S. M. Sze, Semiconductor Devices: Physics and Technology, John Wiley & Sons, 2nd Ed., 2002 ("Sze '02")	
	40	IPR2020-00291-Exhibit 2001-Exhibit 2 to Appendix B of Samsung Electronics Co., LTD's Invalidity Contentions (Invalidity Contention based on U.S. Patent Application Publication No. 2002/0195656 ("Hattori"))	
	41	IPR2020-00291-Exhibit 2013- Declaration of Dr. Alexander D. Glew	
	42	IPR2020-00291-Patent Owner Preliminary Resp	
	43	IPR2020-00291-Patent Owner Sur Reply	
	44	IPR2020-00291-Petition	
	45	IPR2020-00291-Petitioners Reply	
	46	IPR2020-00292-Exhibit 1003-Declaration of Dr. Bruce Smith	
	47	IPR2020-00292-Exhibit 2001-Excerpt from Exhibit 1 to Appendix B of Samsung Electronics Co., Ltd.'s Invalidity Contentions (Invalidity Contention based on "Insulated Gate Bipolar Transistor IGBT Theory and Design" by Vinod Kumar Khanna	
	48	IPR2020-00292-Exhibit 2012-Excerpt from Exhibit A to Joint Claim Construction Chart Pursuant to Patent Rule 4-5, Greenthread, LLC v. Samsung Electronics Co., Ltd., et al., Case No. 2:19-CV-147-JRG, Dkt. 53-1 (Mar. 18, 2020)	

INFORMATION DISCLOSURE STATEMENT BY APPLICANT (Not for submission under 37 CFR 1.99)	Application Number	17371839
	Filing Date	2021-07-09
	First Named Inventor	G.R. Mohan Rao
	Art Unit	2812
	Examiner Name	
	Attorney Docket Number	GRTD60-35314

	49	IPR2020-00292-Patent Owner Preliminary Response	

If you wish to add additional non-patent literature document citation information please click the Add button Add

EXAMINER SIGNATURE

Examiner Signature		Date Considered	

*EXAMINER: Initial if reference considered, whether or not citation is in conformance with MPEP 609. Draw line through a citation if not in conformance and not considered. Include copy of this form with next communication to applicant.

[1] See Kind Codes of USPTO Patent Documents at www.USPTO.GOV or MPEP 901.04. [2] Enter office that issued the document, by the two-letter code (WIPO Standard ST.3). [3] For Japanese patent documents, the indication of the year of the reign of the Emperor must precede the serial number of the patent document. [4] Kind of document by the appropriate symbols as indicated on the document under WIPO Standard ST.16 if possible. [5] Applicant is to place a check mark here if English language translation is attached.

INFORMATION DISCLOSURE STATEMENT BY APPLICANT (Not for submission under 37 CFR 1.99)	Application Number	17371839
	Filing Date	2021-07-09
	First Named Inventor	G.R. Mohan Rao
	Art Unit	2812
	Examiner Name	
	Attorney Docket Number	GRTD60-35314

CERTIFICATION STATEMENT

Please see 37 CFR 1.97 and 1.98 to make the appropriate selection(s):

That each item of information contained in the information disclosure statement was first cited in any communication from a foreign patent office in a counterpart foreign application not more than three months prior to the filing of the information disclosure statement. See 37 CFR 1.97(e)(1).

OR

☐ That no item of information contained in the information disclosure statement was cited in a communication from a foreign patent office in a counterpart foreign application, and, to the knowledge of the person signing the certification after making reasonable inquiry, no item of information contained in the information disclosure statement was known to any individual designated in 37 CFR 1.56(c) more than three months prior to the filing of the information disclosure statement. See 37 CFR 1.97(e)(2).

See attached certification statement.

The fee set forth in 37 CFR 1.17 (p) has been submitted herewith.

☒ A certification statement is not submitted herewith.

SIGNATURE

A signature of the applicant or representative is required in accordance with CFR 1.33, 10.18. Please see CFR 1.4(d) for the form of the signature.

Signature	/Gregory M. Howison, Reg. #30646/	Date (YYYY-MM-DD)	2021-08-11
Name/Print	Gregory M. Howison	Registration Number	30646

This collection of information is required by 37 CFR 1.97 and 1.98. The information is required to obtain or retain a benefit by the public which is to file (and by the USPTO to process) an application. Confidentiality is governed by 35 U.S.C. 122 and 37 CFR 1.14. This collection is estimated to take 1 hour to complete, including gathering, preparing and submitting the completed application form to the USPTO. Time will vary depending upon the individual case. Any comments on the amount of time you require to complete this form and/or suggestions for reducing this burden, should be sent to the Chief Information Officer, U.S. Patent and Trademark Office, U.S. Department of Commerce, P.O. Box 1450, Alexandria, VA 22313-1450. DO NOT SEND FEES OR COMPLETED FORMS TO THIS ADDRESS. **SEND TO: Commissioner for Patents, P.O. Box 1450, Alexandria, VA 22313-1450.**

Privacy Act Statement

The Privacy Act of 1974 (P.L. 93-579) requires that you be given certain information in connection with your submission of the attached form related to a patent application or patent. Accordingly, pursuant to the requirements of the Act, please be advised that: (1) the general authority for the collection of this information is 35 U.S.C. 2(b)(2); (2) furnishing of the information solicited is voluntary; and (3) the principal purpose for which the information is used by the U.S. Patent and Trademark Office is to process and/or examine your submission related to a patent application or patent. If you do not furnish the requested information, the U.S. Patent and Trademark Office may not be able to process and/or examine your submission, which may result in termination of proceedings or abandonment of the application or expiration of the patent.

The information provided by you in this form will be subject to the following routine uses:

1. The information on this form will be treated confidentially to the extent allowed under the Freedom of Information Act (5 U.S.C. 552) and the Privacy Act (5 U.S.C. 552a). Records from this system of records may be disclosed to the Department of Justice to determine whether the Freedom of Information Act requires disclosure of these record s.

2. A record from this system of records may be disclosed, as a routine use, in the course of presenting evidence to a court, magistrate, or administrative tribunal, including disclosures to opposing counsel in the course of settlement negotiations.

3. A record in this system of records may be disclosed, as a routine use, to a Member of Congress submitting a request involving an individual, to whom the record pertains, when the individual has requested assistance from the Member with respect to the subject matter of the record.

4. A record in this system of records may be disclosed, as a routine use, to a contractor of the Agency having need for the information in order to perform a contract. Recipients of information shall be required to comply with the requirements of the Privacy Act of 1974, as amended, pursuant to 5 U.S.C. 552a(m).

5. A record related to an International Application filed under the Patent Cooperation Treaty in this system of records may be disclosed, as a routine use, to the International Bureau of the World Intellectual Property Organization, pursuant to the Patent Cooperation Treaty.

6. A record in this system of records may be disclosed, as a routine use, to another federal agency for purposes of National Security review (35 U.S.C. 181) and for review pursuant to the Atomic Energy Act (42 U.S.C. 218(c)).

7. A record from this system of records may be disclosed, as a routine use, to the Administrator, General Services, or his/her designee, during an inspection of records conducted by GSA as part of that agency's responsibility to recommend improvements in records management practices and programs, under authority of 44 U.S.C. 2904 and 2906. Such disclosure shall be made in accordance with the GSA regulations governing inspection of records for this purpose, and any other relevant (i.e., GSA or Commerce) directive. Such disclosure shall not be used to make determinations about individuals.

8. A record from this system of records may be disclosed, as a routine use, to the public after either publication of the application pursuant to 35 U.S.C. 122(b) or issuance of a patent pursuant to 35 U.S.C. 151. Further, a record may be disclosed, subject to the limitations of 37 CFR 1.14, as a routine use, to the public if the record was filed in an application which became abandoned or in which the proceedings were terminated and which application is referenced by either a published application, an application open to public inspections or an issued patent.

9. A record from this system of records may be disclosed, as a routine use, to a Federal, State, or local law enforcement agency, if the USPTO becomes aware of a violation or potential violation of law or regulation.

Electronic Acknowledgement Receipt

EFS ID:	43485685
Application Number:	17371839
International Application Number:	
Confirmation Number:	2197
Title of Invention:	SEMICONDUCTOR DEVICES WITH GRADED DOPANT REGIONS
First Named Inventor/Applicant Name:	G.R. MOHAN RAO
Customer Number:	25883
Filer:	Gregory Michael Howison
Filer Authorized By:	
Attorney Docket Number:	GRTD60-35314
Receipt Date:	13-AUG-2021
Filing Date:	09-JUL-2021
Time Stamp:	13:18:02
Application Type:	Utility under 35 USC 111(a)

Payment information:

Submitted with Payment	no

File Listing:

Document Number	Document Description	File Name	File Size(Bytes)/ Message Digest	Multi Part /.zip	Pages (if appl.)
1	Information Disclosure Statement (IDS) Form (SB08)	GRT35314IDSTransmittal.pdf	72988 e400130c27c0fc12e2dff0b81893cb8d61952629	no	1

Warnings:

Information:					
This is not an USPTO supplied IDS fillable form					
2	Information Disclosure Statement (IDS) Form (SB08)	GRT35314IDS.pdf	1055703 28cb5924ed51719ac3d30056384a0a0d7946e1da	no	10
Warnings:					
Information:					
			Total Files Size (in bytes):	1128691	

This Acknowledgement Receipt evidences receipt on the noted date by the USPTO of the indicated documents, characterized by the applicant, and including page counts, where applicable. It serves as evidence of receipt similar to a Post Card, as described in MPEP 503.

New Applications Under 35 U.S.C. 111
If a new application is being filed and the application includes the necessary components for a filing date (see 37 CFR 1.53(b)-(d) and MPEP 506), a Filing Receipt (37 CFR 1.54) will be issued in due course and the date shown on this Acknowledgement Receipt will establish the filing date of the application.
National Stage of an International Application under 35 U.S.C. 371
If a timely submission to enter the national stage of an international application is compliant with the conditions of 35 U.S.C. 371 and other applicable requirements a Form PCT/DO/EO/903 indicating acceptance of the application as a national stage submission under 35 U.S.C. 371 will be issued in addition to the Filing Receipt, in due course.
New International Application Filed with the USPTO as a Receiving Office
If a new international application is being filed and the international application includes the necessary components for an international filing date (see PCT Article 11 and MPEP 1810), a Notification of the International Application Number and of the International Filing Date (Form PCT/RO/105) will be issued in due course, subject to prescriptions concerning national security, and the date shown on this Acknowledgement Receipt will establish the international filing date of the application.

IN THE UNITED STATES PATENT AND TRADEMARK OFFICE

In re application of:	G.R. Mohan Rao
Serial No.:	17/371,839
Confirmation No.:	2197
Filed:	July 9, 2021
Group:	2812
Examiner:	to be assigned
For:	SEMICONDUCTOR DEVICES WITH GRADED DOPANT REGIONS

Mail Stop DD
Commissioner for Patents
P.O. Box 1450
Alexandria, VA 22313-1450

Dear Sir:

INFORMATION DISCLOSURE STATEMENT

In accordance with the requirements of 37 C.F.R. §§ 1.56, 1.97, and 1.98, attached please find a Form PTO SB/08 listing information for consideration by the Office in connection with its examination of the above-captioned patent application.

It is brought to Examiner's attention that the references listed on the attached Form PTO SB/08 were previously submitted to the Office in connection with a prior application, namely Application Serial No. 16/947,294, which is relied upon in the current application for an earlier filing date under 35 U.S.C. §120. Pursuant to 37 C.F.R. 1.98(d), copies of such previously submitted items are not provided herein.

Respectfully submitted,
MUNCK WILSON MANDALA, LLP
Attorneys for Applicant(s)

/Gregory M. Howison, Reg. #30646/

Gregory M. Howison
Registration No. 30,646

GMH/als
P.O. Drawer 800889
Dallas, Texas 75380
Tel: 972-628-3600
Fax: 972-628-3616
August 11, 2021

PATENT APPLICATION FEE DETERMINATION RECORD

Substitute for Form PTO-875

Application or Docket Number
17/371,839

APPLICATION AS FILED - PART I

FOR	(Column 1) NUMBER FILED	(Column 2) NUMBER EXTRA	SMALL ENTITY RATE($)	SMALL ENTITY FEE($)	OR	OTHER THAN SMALL ENTITY RATE($)	OTHER THAN SMALL ENTITY FEE($)
BASIC FEE (37 CFR 1.16(a), (b), or (c))	N/A	N/A	N/A			N/A	320
SEARCH FEE (37 CFR 1.16(k), (i), or (m))	N/A	N/A	N/A			N/A	700
EXAMINATION FEE (37 CFR 1.16(o), (p), or (q))	N/A	N/A	N/A			N/A	800
TOTAL CLAIMS (37 CFR 1.16(i))	30 minus 20 =	* 10			OR	x 100 =	1000
INDEPENDENT CLAIMS (37 CFR 1.16(h))	2 minus 3 =	*				x 480 =	0.00
APPLICATION SIZE FEE (37 CFR 1.16(s))	If the specification and drawings exceed 100 sheets of paper, the application size fee due is $310 ($155 for small entity) for each additional 50 sheets or fraction thereof. See 35 U.S.C. 41(a)(1)(G) and 37 CFR 1.16(s).						0.00
MULTIPLE DEPENDENT CLAIM PRESENT (37 CFR 1.16(j))							0.00
* If the difference in column 1 is less than zero, enter "0" in column 2.			TOTAL			TOTAL	2820

APPLICATION AS AMENDED - PART II

		(Column 1) CLAIMS REMAINING AFTER AMENDMENT		(Column 2) HIGHEST NUMBER PREVIOUSLY PAID FOR	(Column 3) PRESENT EXTRA	SMALL ENTITY RATE($)	SMALL ENTITY ADDITIONAL FEE($)	OR	OTHER THAN SMALL ENTITY RATE($)	OTHER THAN SMALL ENTITY ADDITIONAL FEE($)
AMENDMENT A	Total (37 CFR 1.16(i))	*	Minus	**	=	x =		OR	x =	
AMENDMENT A	Independent (37 CFR 1.16(h))	*	Minus	***	=	x =		OR	x =	
AMENDMENT A	Application Size Fee (37 CFR 1.16(s))									
AMENDMENT A	FIRST PRESENTATION OF MULTIPLE DEPENDENT CLAIM (37 CFR 1.16(j))							OR		
						TOTAL ADD'L FEE		OR	TOTAL ADD'L FEE	

		(Column 1) CLAIMS REMAINING AFTER AMENDMENT		(Column 2) HIGHEST NUMBER PREVIOUSLY PAID FOR	(Column 3) PRESENT EXTRA	SMALL ENTITY RATE($)	SMALL ENTITY ADDITIONAL FEE($)	OR	OTHER THAN SMALL ENTITY RATE($)	OTHER THAN SMALL ENTITY ADDITIONAL FEE($)
AMENDMENT B	Total (37 CFR 1.16(i))	*	Minus	**	=	x =		OR	x =	
AMENDMENT B	Independent (37 CFR 1.16(h))	*	Minus	***	=	x =		OR	x =	
AMENDMENT B	Application Size Fee (37 CFR 1.16(s))									
AMENDMENT B	FIRST PRESENTATION OF MULTIPLE DEPENDENT CLAIM (37 CFR 1.16(j))							OR		
						TOTAL ADD'L FEE		OR	TOTAL ADD'L FEE	

* If the entry in column 1 is less than the entry in column 2, write "0" in column 3.
** If the "Highest Number Previously Paid For" IN THIS SPACE is less than 20, enter "20".
*** If the "Highest Number Previously Paid For" IN THIS SPACE is less than 3, enter "3".
The "Highest Number Previously Paid For" (Total or Independent) is the highest found in the appropriate box in column 1.

UNITED STATES PATENT AND TRADEMARK OFFICE

UNITED STATES DEPARTMENT OF COMMERCE
United States Patent and Trademark Office
Address: COMMISSIONER FOR PATENTS
P.O. Box 1450
Alexandria, Virginia 22313-1450
www.uspto.gov

APPLICATION NUMBER	FILING or 371(c) DATE	GRP ART UNIT	FIL FEE REC'D	ATTY.DOCKET.NO	TOT CLAIMS	IND CLAIMS
17/371,839	07/09/2021	2812	2820	GRTD60-35314	30	2

CONFIRMATION NO. 2197

UPDATED FILING RECEIPT

OC000000127679619

25883
MUNCK WILSON MANDALA L.L.P
P.O. Drawer 800889
DALLAS, TX 75380

Date Mailed: 08/13/2021

Receipt is acknowledged of this non-provisional utility patent application. The application will be taken up for examination in due course. Applicant will be notified as to the results of the examination. Any correspondence concerning the application must include the following identification information: the U.S. APPLICATION NUMBER, FILING DATE, NAME OF FIRST INVENTOR, and TITLE OF INVENTION. Fees transmitted by check or draft are subject to collection.

Please verify the accuracy of the data presented on this receipt. If an error is noted on this Filing Receipt, please submit a written request for a corrected Filing Receipt, including a properly marked-up ADS showing the changes with strike-through for deletions and underlining for additions. If you received a "Notice to File Missing Parts" or other Notice requiring a response for this application, please submit any request for correction to this Filing Receipt with your reply to the Notice. When the USPTO processes the reply to the Notice, the USPTO will generate another Filing Receipt incorporating the requested corrections provided that the request is grantable.

Inventor(s)

G.R. MOHAN RAO, ALLEN, TX;

Applicant(s)

GREENTHREAD, LLC, Dallas, TX;

Power of Attorney: The patent practitioners associated with Customer Number 25883

Domestic Priority data as claimed by applicant

This application is a CON of 16/947,294 07/27/2020
which is a CON of 16/717,950 12/17/2019 PAT 10734481
which is a CON of 15/590,282 05/09/2017 PAT 10510842
which is a CON of 14/931,636 11/03/2015 PAT 9647070
which is a CON of 14/515,584 10/16/2014 PAT 9190502
which is a CON of 13/854,319 04/01/2013 ABN
which is a CON of 11/622,496 01/12/2007 PAT 8421195
which is a DIV of 10/934,915 09/03/2004 ABN

Foreign Applications for which priority is claimed (You may be eligible to benefit from the **Patent Prosecution Highway** program at the USPTO. Please see http://www.uspto.gov for more information.) - None.
Foreign application information must be provided in an Application Data Sheet in order to constitute a claim to foreign priority. See 37 CFR 1.55 and 1.76.

Permission to Access Application via Priority Document Exchange: Yes

Permission to Access Search Results: Yes

Applicant may provide or rescind an authorization for access using Form PTO/SB/39 or Form PTO/SB/69 as appropriate.

If Required, Foreign Filing License Granted: 07/22/2021
The country code and number of your priority application, to be used for filing abroad under the Paris Convention, is **US 17/371,839**
Projected Publication Date: 11/18/2021
Non-Publication Request: No
Early Publication Request: No
Title

SEMICONDUCTOR DEVICES WITH GRADED DOPANT REGIONS

Preliminary Class

438

Statement under 37 CFR 1.55 or 1.78 for AIA (First Inventor to File) Transition Applications: No

PROTECTING YOUR INVENTION OUTSIDE THE UNITED STATES

Since the rights granted by a U.S. patent extend only throughout the territory of the United States and have no effect in a foreign country, an inventor who wishes patent protection in another country must apply for a patent in a specific country or in regional patent offices. Applicants may wish to consider the filing of an international application under the Patent Cooperation Treaty (PCT). An international (PCT) application generally has the same effect as a regular national patent application in each PCT-member country. The PCT process **simplifies** the filing of patent applications on the same invention in member countries, but **does not result** in a grant of "an international patent" and does not eliminate the need of applicants to file additional documents and fees in countries where patent protection is desired.

Almost every country has its own patent law, and a person desiring a patent in a particular country must make an application for patent in that country in accordance with its particular laws. Since the laws of many countries differ in various respects from the patent law of the United States, applicants are advised to seek guidance from specific foreign countries to ensure that patent rights are not lost prematurely.

Applicants also are advised that in the case of inventions made in the United States, the Director of the USPTO must issue a license before applicants can apply for a patent in a foreign country. The filing of a U.S. patent application serves as a request for a foreign filing license. The application's filing receipt contains further information and guidance as to the status of applicant's license for foreign filing.

Applicants may wish to consult the USPTO booklet, "General Information Concerning Patents" (specifically, the section entitled "Treaties and Foreign Patents") for more information on timeframes and deadlines for filing foreign patent applications. The guide is available either by contacting the USPTO Contact Center at 800-786-9199, or it can be viewed on the USPTO website at http://www.uspto.gov/web/offices/pac/doc/general/index.html.

For information on preventing theft of your intellectual property (patents, trademarks and copyrights), you may wish to consult the U.S. Government website, http://www.stopfakes.gov. Part of a Department of Commerce initiative, this website includes self-help "toolkits" giving innovators guidance on how to protect intellectual property in specific

countries such as China, Korea and Mexico. For questions regarding patent enforcement issues, applicants may call the U.S. Government hotline at 1-866-999-HALT (1-866-999-4258).

LICENSE FOR FOREIGN FILING UNDER

Title 35, United States Code, Section 184

Title 37, Code of Federal Regulations, 5.11 & 5.15

GRANTED

The applicant has been granted a license under 35 U.S.C. 184, if the phrase "IF REQUIRED, FOREIGN FILING LICENSE GRANTED" followed by a date appears on this form. Such licenses are issued in all applications where the conditions for issuance of a license have been met, regardless of whether or not a license may be required as set forth in 37 CFR 5.15. The scope and limitations of this license are set forth in 37 CFR 5.15(a) unless an earlier license has been issued under 37 CFR 5.15(b). The license is subject to revocation upon written notification. The date indicated is the effective date of the license, unless an earlier license of similar scope has been granted under 37 CFR 5.13 or 5.14.

This license is to be retained by the licensee and may be used at any time on or after the effective date thereof unless it is revoked. This license is automatically transferred to any related applications(s) filed under 37 CFR 1.53(d). This license is not retroactive.

The grant of a license does not in any way lessen the responsibility of a licensee for the security of the subject matter as imposed by any Government contract or the provisions of existing laws relating to espionage and the national security or the export of technical data. Licensees should apprise themselves of current regulations especially with respect to certain countries, of other agencies, particularly the Office of Defense Trade Controls, Department of State (with respect to Arms, Munitions and Implements of War (22 CFR 121-128)); the Bureau of Industry and Security, Department of Commerce (15 CFR parts 730-774); the Office of Foreign AssetsControl, Department of Treasury (31 CFR Parts 500+) and the Department of Energy.

NOT GRANTED

No license under 35 U.S.C. 184 has been granted at this time, if the phrase "IF REQUIRED, FOREIGN FILING LICENSE GRANTED" DOES NOT appear on this form. Applicant may still petition for a license under 37 CFR 5.12, if a license is desired before the expiration of 6 months from the filing date of the application. If 6 months has lapsed from the filing date of this application and the licensee has not received any indication of a secrecy order under 35 U.S.C. 181, the licensee may foreign file the application pursuant to 37 CFR 5.15(b).

SelectUSA

The United States represents the largest, most dynamic marketplace in the world and is an unparalleled location for business investment, innovation, and commercialization of new technologies. The U.S. offers tremendous resources and advantages for those who invest and manufacture goods here. Through SelectUSA, our nation works to promote and facilitate business investment. SelectUSA provides information assistance to the international investor community; serves as an ombudsman for existing and potential investors; advocates on behalf of U.S. cities, states, and regions competing for global investment; and counsels U.S. economic development organizations on investment attraction best practices. To learn more about why the United States is the best country in the world to develop

technology, manufacture products, deliver services, and grow your business, visit http://www.SelectUSA.gov or call +1-202-482-6800.

IN THE UNITED STATES PATENT AND TRADEMARK OFFICE

In re application of:	G.R. Mohan RAO
Serial No.:	17/371,839
Confirmation No.:	2197
Filed:	July 9, 2021
Group:	2812
Examiner:	To be assigned
For:	SEMICONDUCTOR DEVICES WITH GRADED DOPANT REGIONS

Mail Stop: Missing Parts
Commissioner for Patents
P.O. Box 1450
Alexandria, VA 22313-1450

Dear Sir:

RESPONSE TO NOTICE TO FILE CORRECTED APPLICATION PAPERS

In response to the Notice to File Corrected Application Papers dated July 23, 2021, the Applicant submits replacement Drawings marked "Replacement Sheets."

Please charge any additional fees or deficiencies in fees or credit any overpayment to Deposit Account No. 50-0208/GRTD60-35314.

Respectfully submitted,
MUNCK WILSON MANDALA, LLP
Attorneys for Applicant(s)

/Gregory M. Howison, Reg. #30,646/

Gregory M. Howison
Registration No. 30,646

GMH/als
P.O. Drawer 800889
Dallas, Texas 75380
Tel: 972-628-3600
Fax: 972-628-3616
August 9, 2021

Greenthread Ex. 2071, p. 148 of 211
Semiconductor v. Greenthread
IPR2023-01244

UNITED STATES PATENT AND TRADEMARK OFFICE

UNITED STATES DEPARTMENT OF COMMERCE
United States Patent and Trademark Office
Address: COMMISSIONER FOR PATENTS
P.O. Box 1450
Alexandria, Virginia 22313-1450
www.uspto.gov

APPLICATION NUMBER	FILING OR 371(C) DATE	FIRST NAMED APPLICANT	ATTY. DOCKET NO./TITLE
17/371,839	07/09/2021	G.R. MOHAN RAO	GRTD60-35314

CONFIRMATION NO. 2197

FORMALITIES LETTER

OC000000127165596

25883
MUNCK WILSON MANDALA L.L.P
P.O. Drawer 800889
DALLAS, TX 75380

Date Mailed: 07/23/2021

NOTICE TO FILE CORRECTED APPLICATION PAPERS

Filing Date Granted

An application number and filing date have been accorded to this application. The application is informal since it does not comply with the regulations for the reason(s) indicated below. Applicant is given **TWO MONTHS** from the date of this Notice within which to correct the informalities indicated below. Extensions of time may be obtained by filing a petition accompanied by the extension fee under the provisions of 37 CFR 1.136(a).

The required item(s) identified below must be timely submitted to avoid abandonment:

- Replacement drawings in compliance with 37 CFR 1.84 and 37 CFR 1.121(d) are required. The drawings submitted are not acceptable because:
  - The drawings contain excessive text. Suitable descriptive legends may be used, or may be required by the Examiner where necessary for understanding of the drawing but should contain as few words as possible (see 37 CFR 1.84(o)). See Figure(s) 3D.

Applicant is cautioned that correction of the above items may cause the specification and drawings page count to exceed 100 pages. If the specification and drawings exceed 100 pages, applicant will need to submit the required application size fee.

Greenthread Ex. 2071, p. 149 of 211
Semiconductor v. Greenthread
IPR2023-01244

Replies must be received in the USPTO within the set time period or must include a proper Certificate of Mailing or Transmission under 37 CFR 1.8 with a mailing or transmission date within the set time period. For more information and a suggested format, see Form PTO/SB/92 and MPEP 512.

Replies should be mailed to:

Mail Stop Missing Parts
Commissioner for Patents
P.O. Box 1450
Alexandria VA 22313-1450

Registered users of EFS-Web may alternatively submit their reply to this notice via EFS-Web, including a copy of this Notice and selecting the document description "Applicant response to Pre-Exam Formalities Notice". https://sportal.uspto.gov/authenticate/AuthenticateUserLocalEPF.html

For more information about EFS-Web please call the USPTO Electronic Business Center at 1-866-217-9197 or visit our website at http://www.uspto.gov/ebc.

If you are not using EFS-Web to submit your reply, you must include a copy of this notice.

Questions about the contents of this notice and the requirements it sets forth should be directed to the Office of Data Management, Application Assistance Unit, at **(571) 272-4000** or **(571) 272-4200** or **1-888-786-0101**.

/hnguyen/

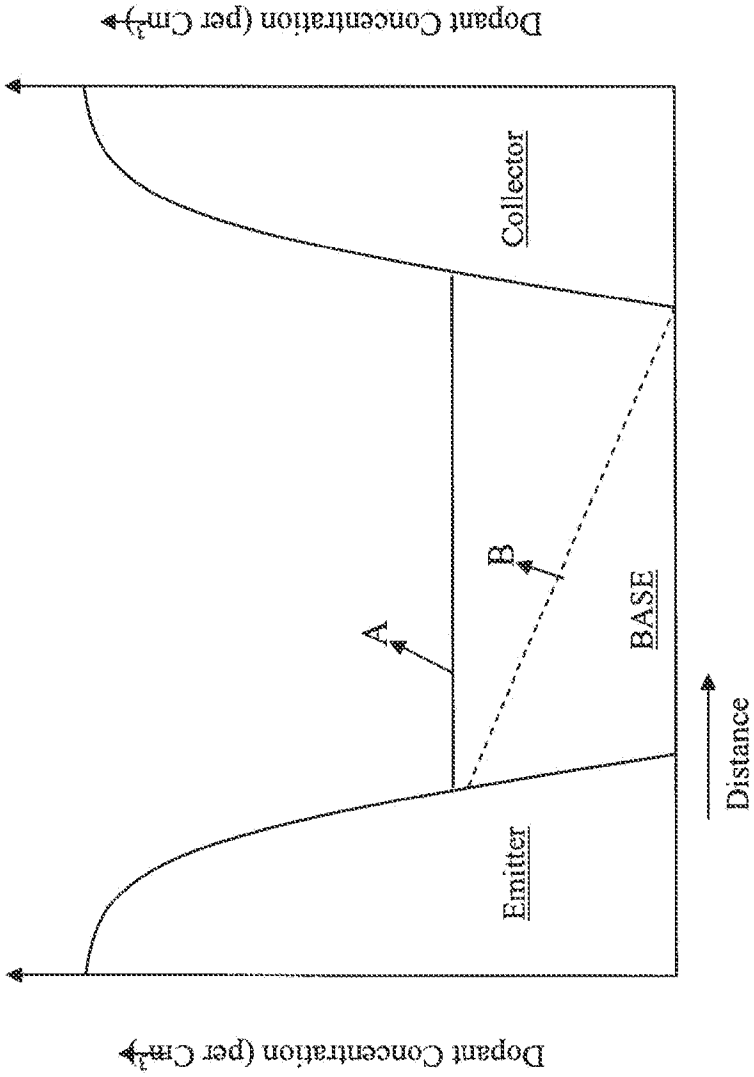

Figure 1 Prior Art

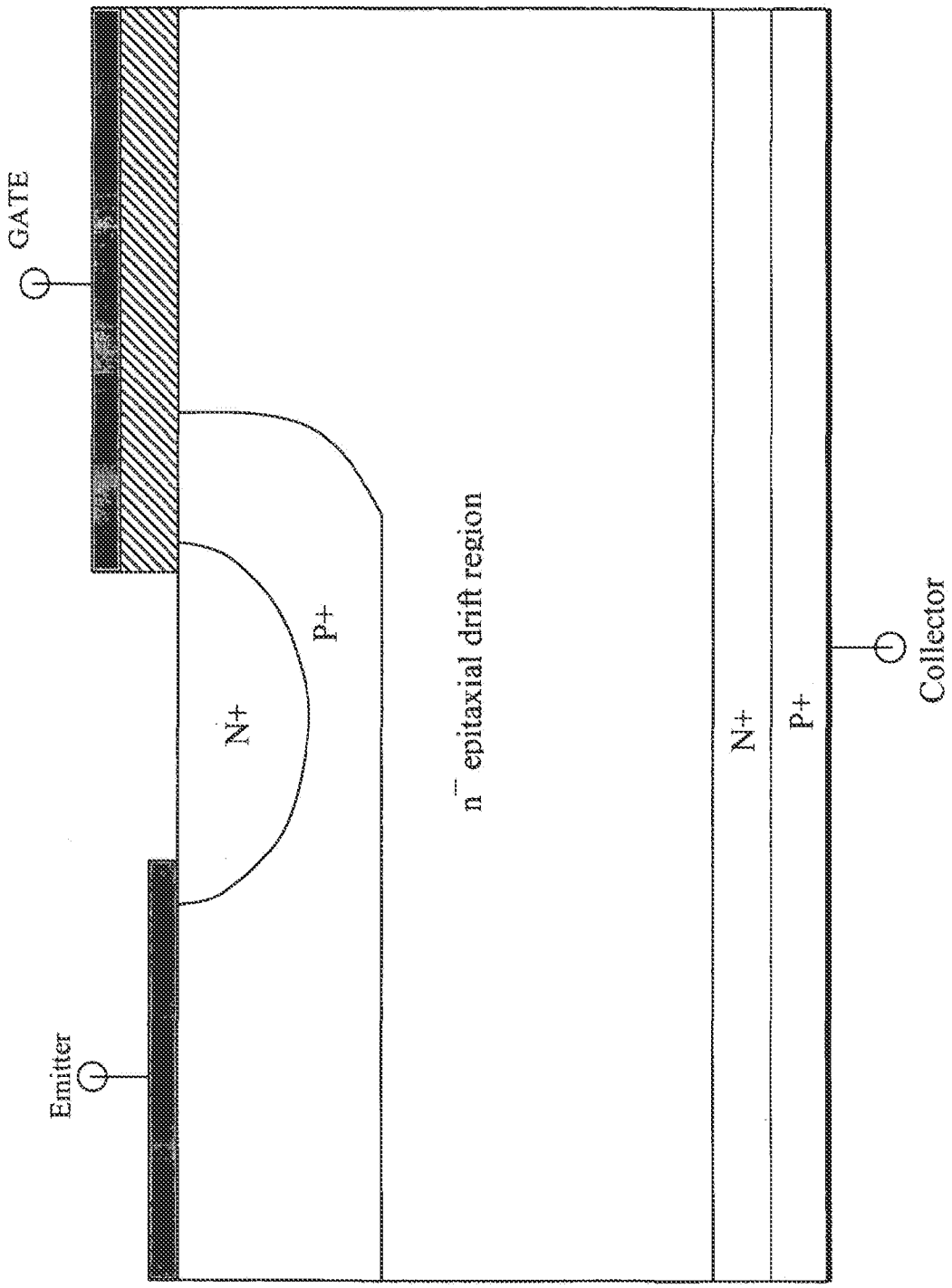

FIGURE 2 Prior art

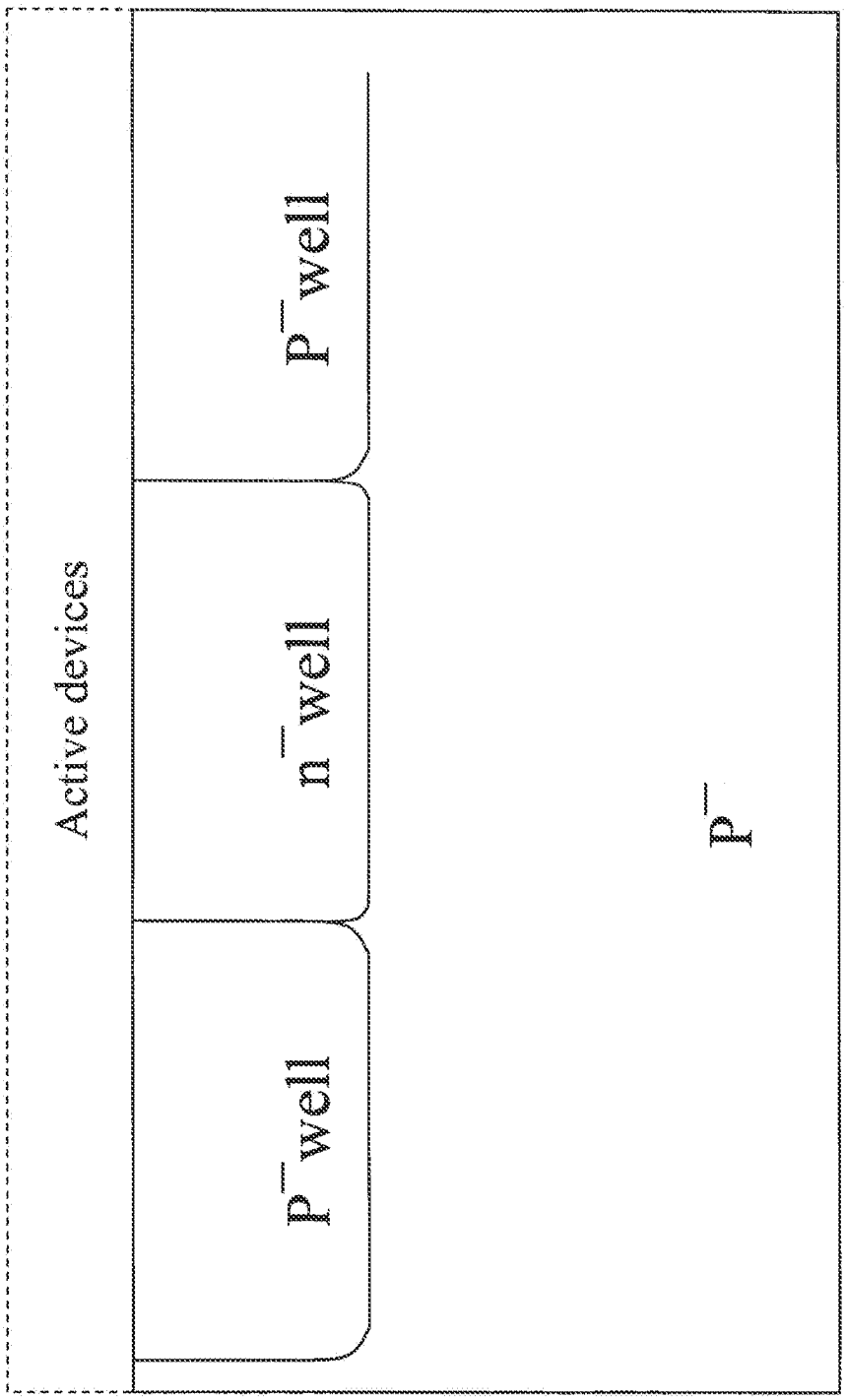

FIGURE 3A Prior art

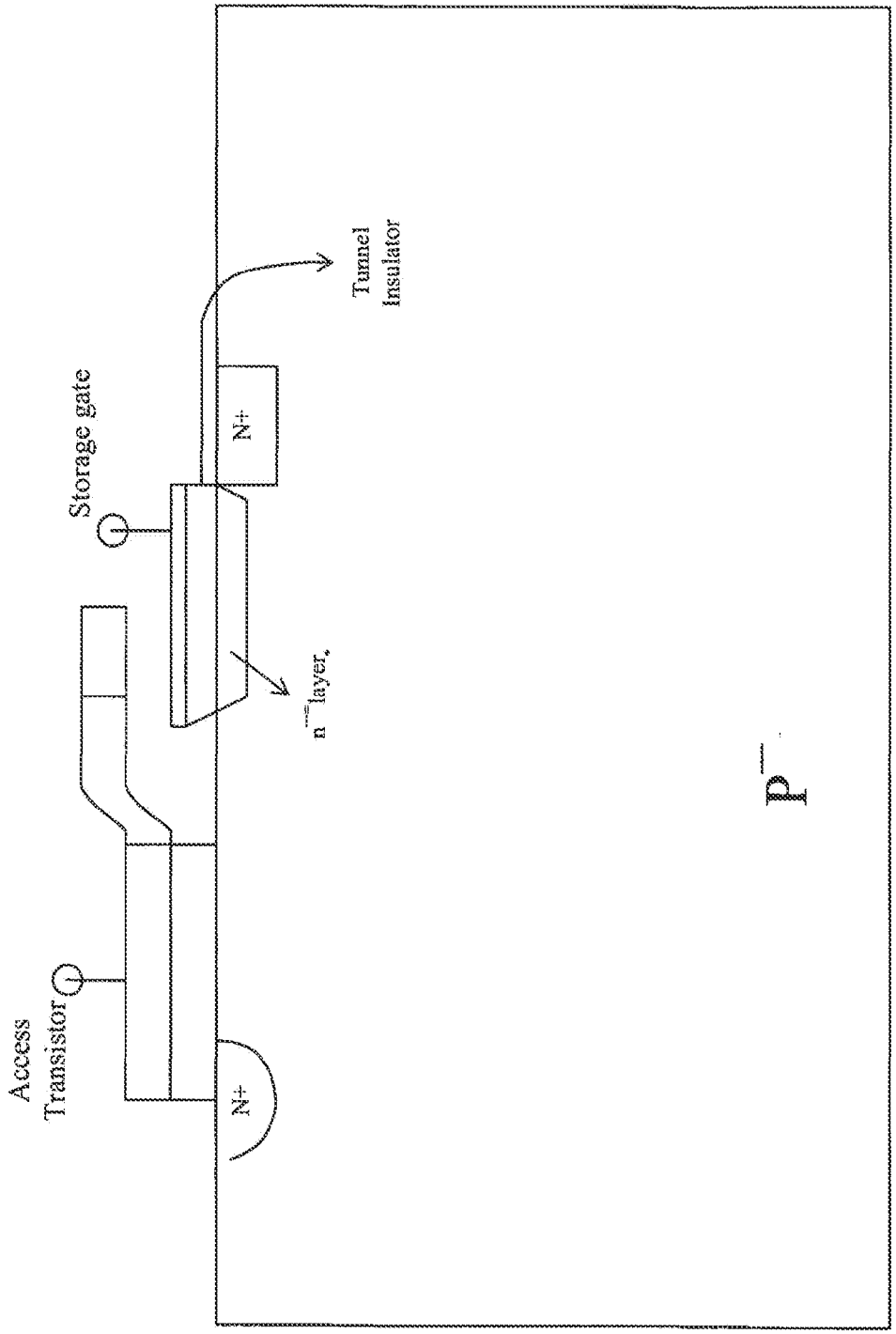

FIGURE 3B Prior art

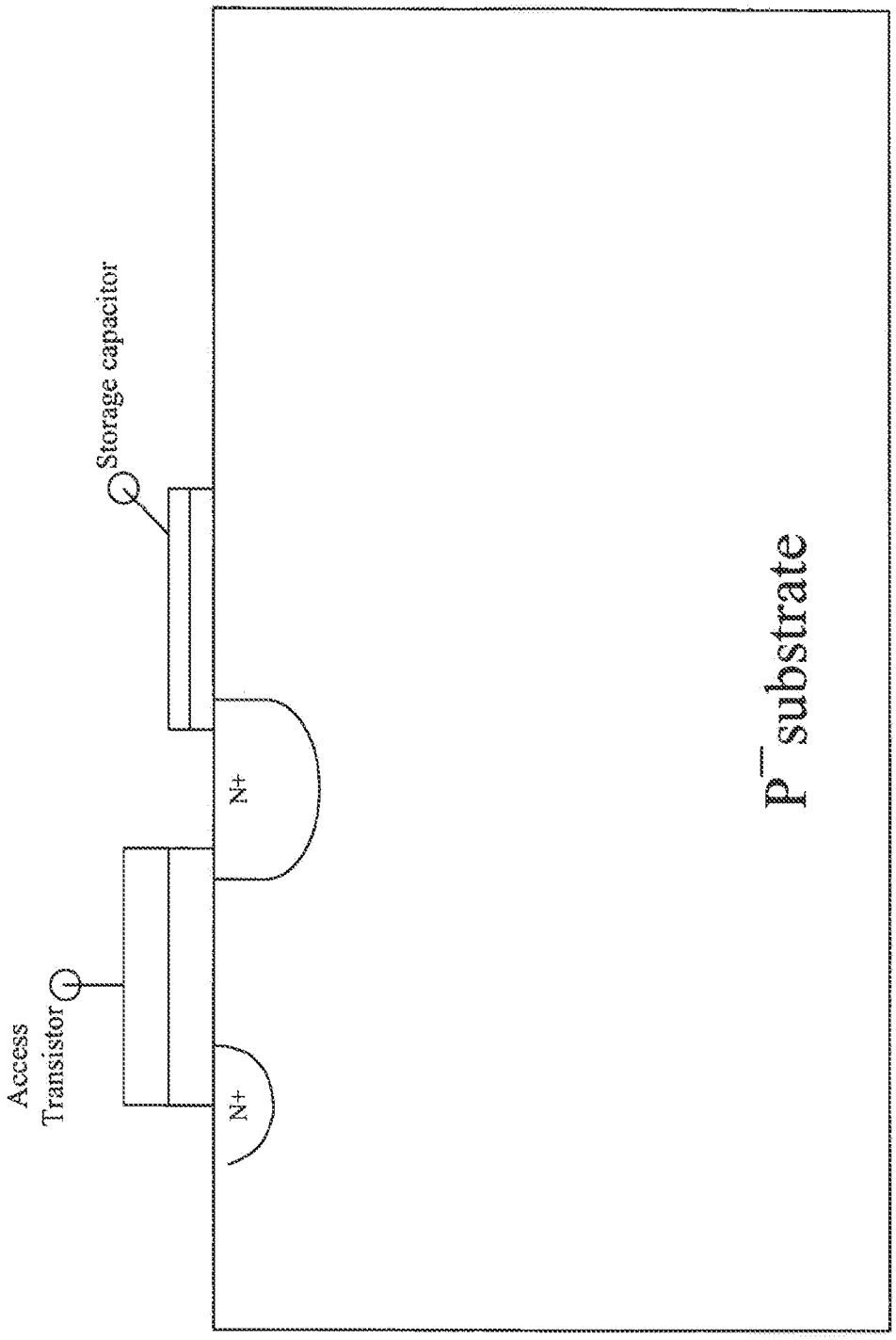

FIGURE 3C Prior art

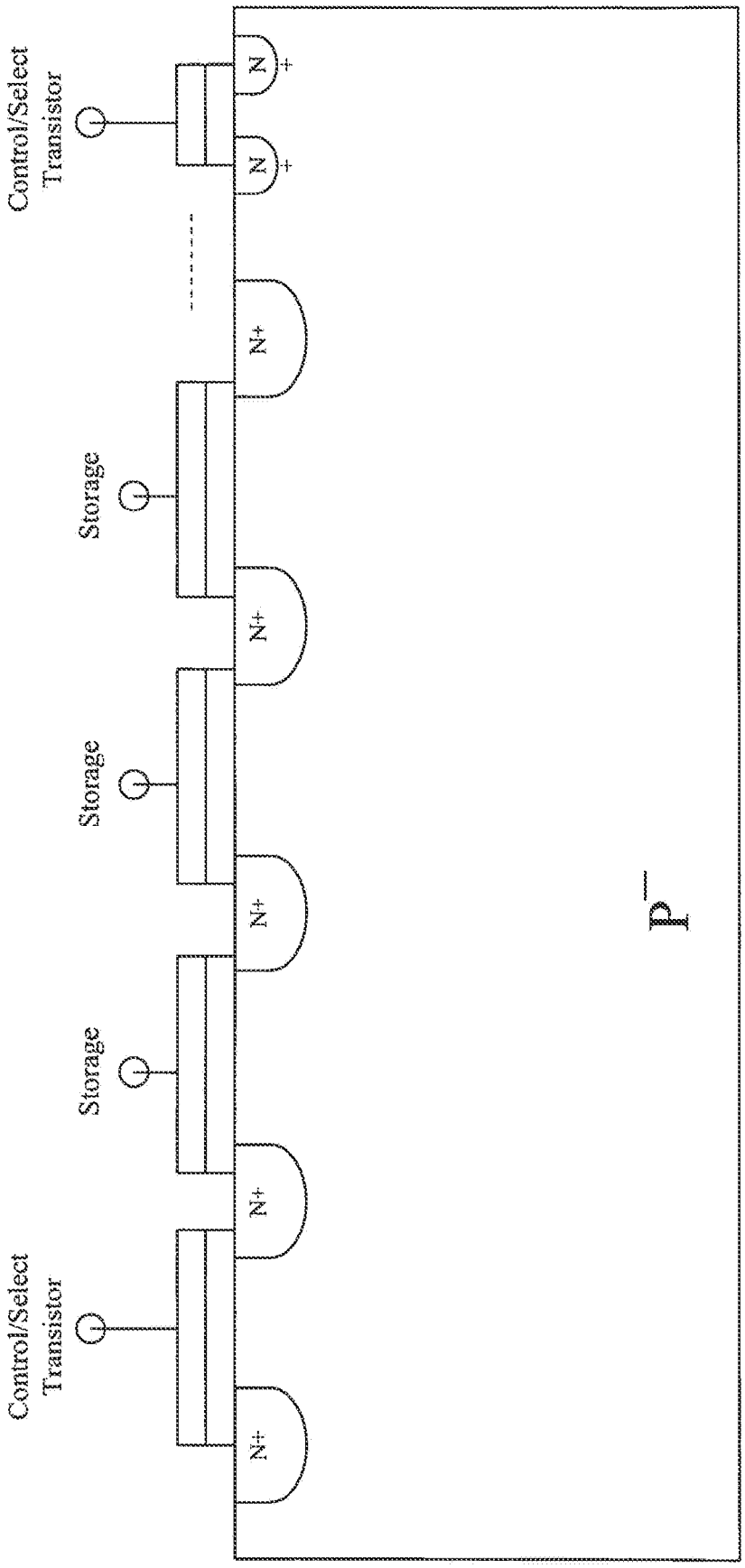

FIGURE 3D Prior art

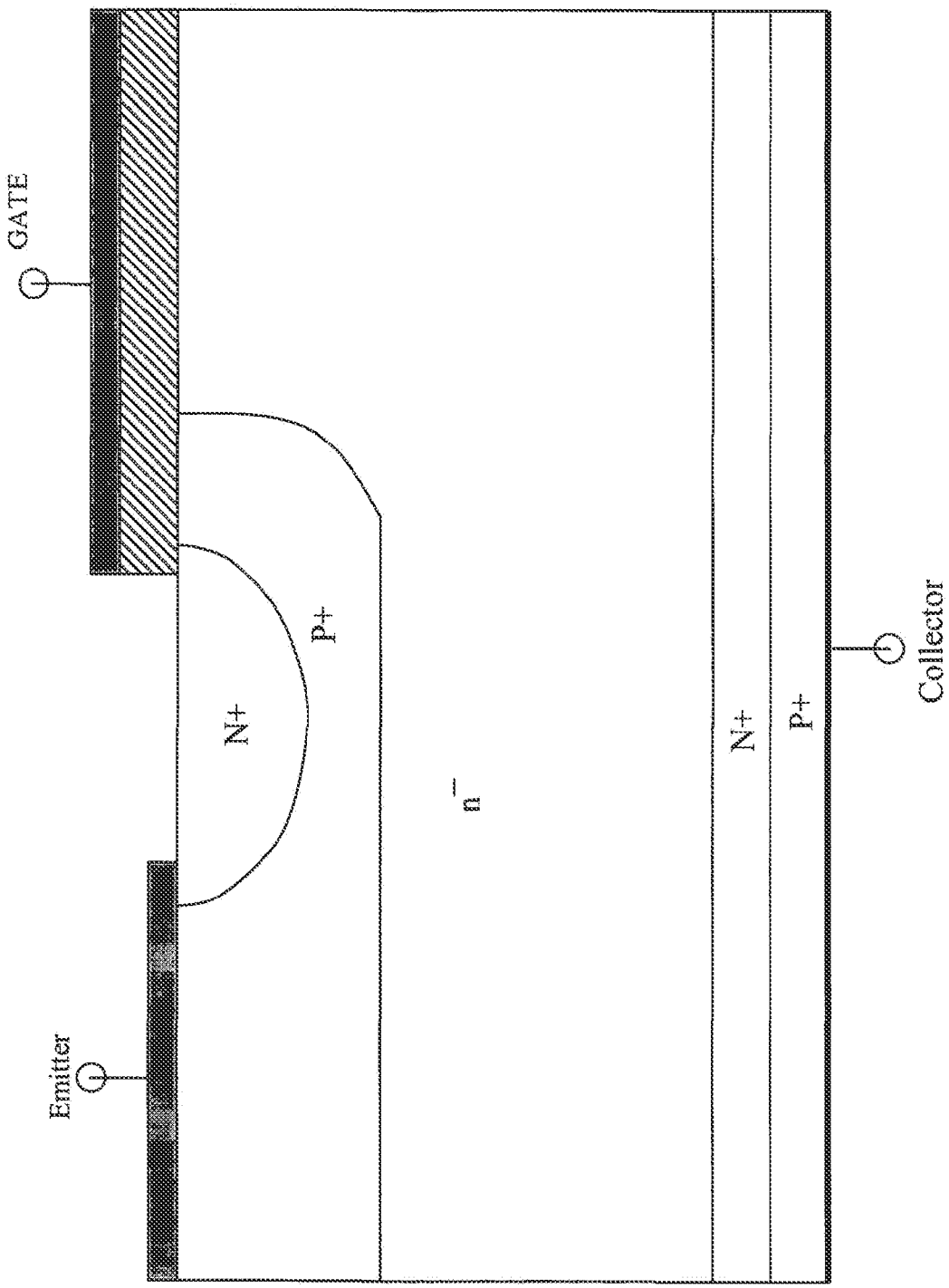

FIGURE 4

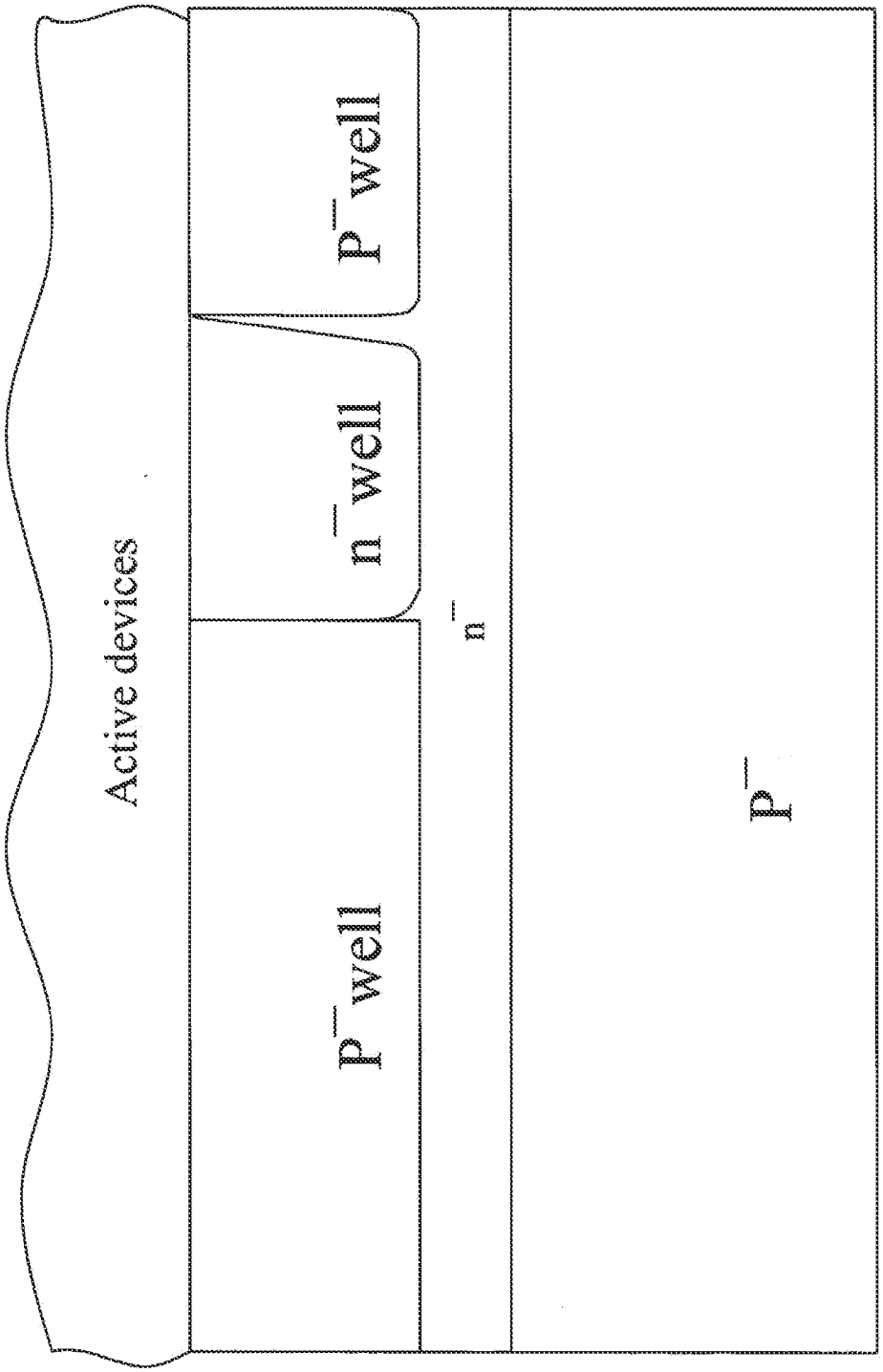

FIGURE 5A

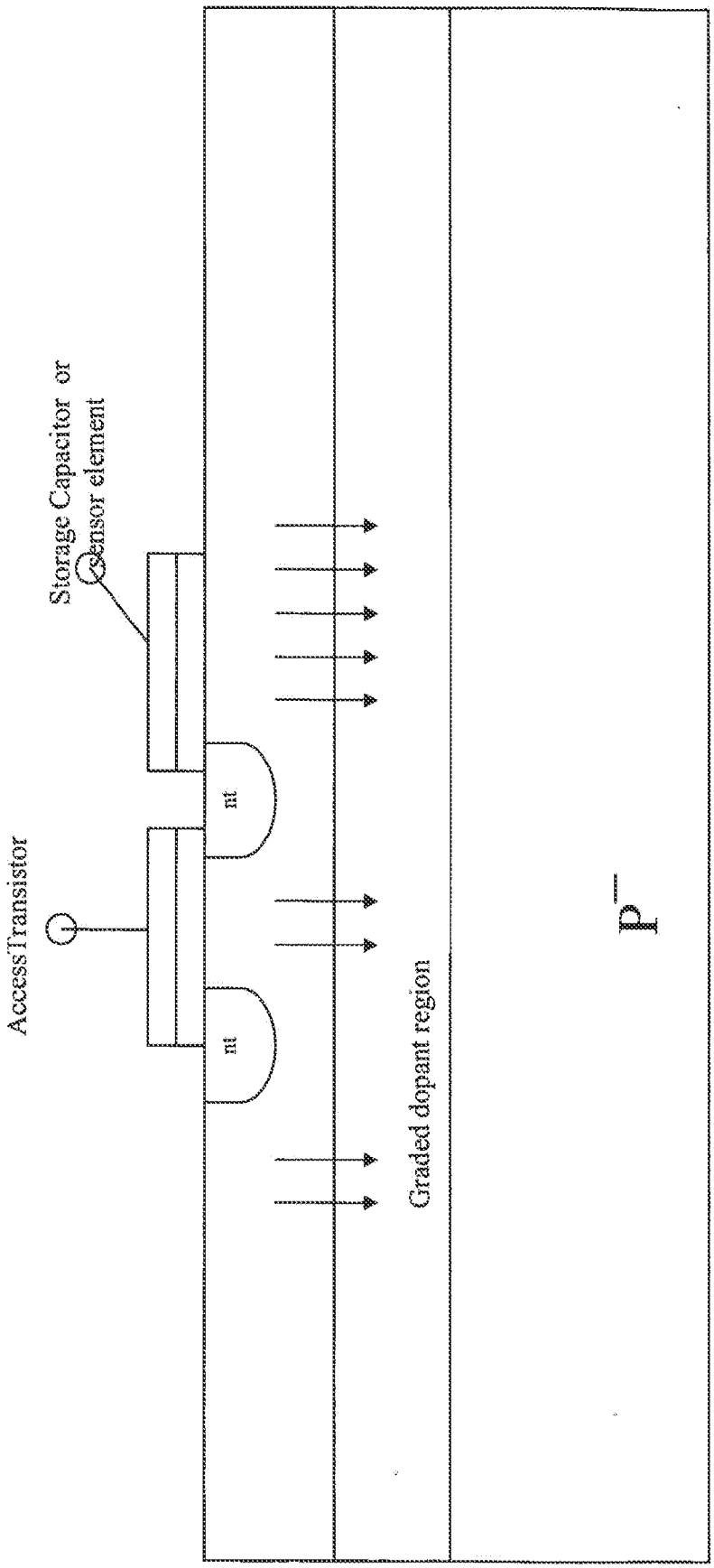
Storage Capacitor or
Sensor element
Access Transistor
n+
n+
Graded dopant region
P-

FIGURE 5B

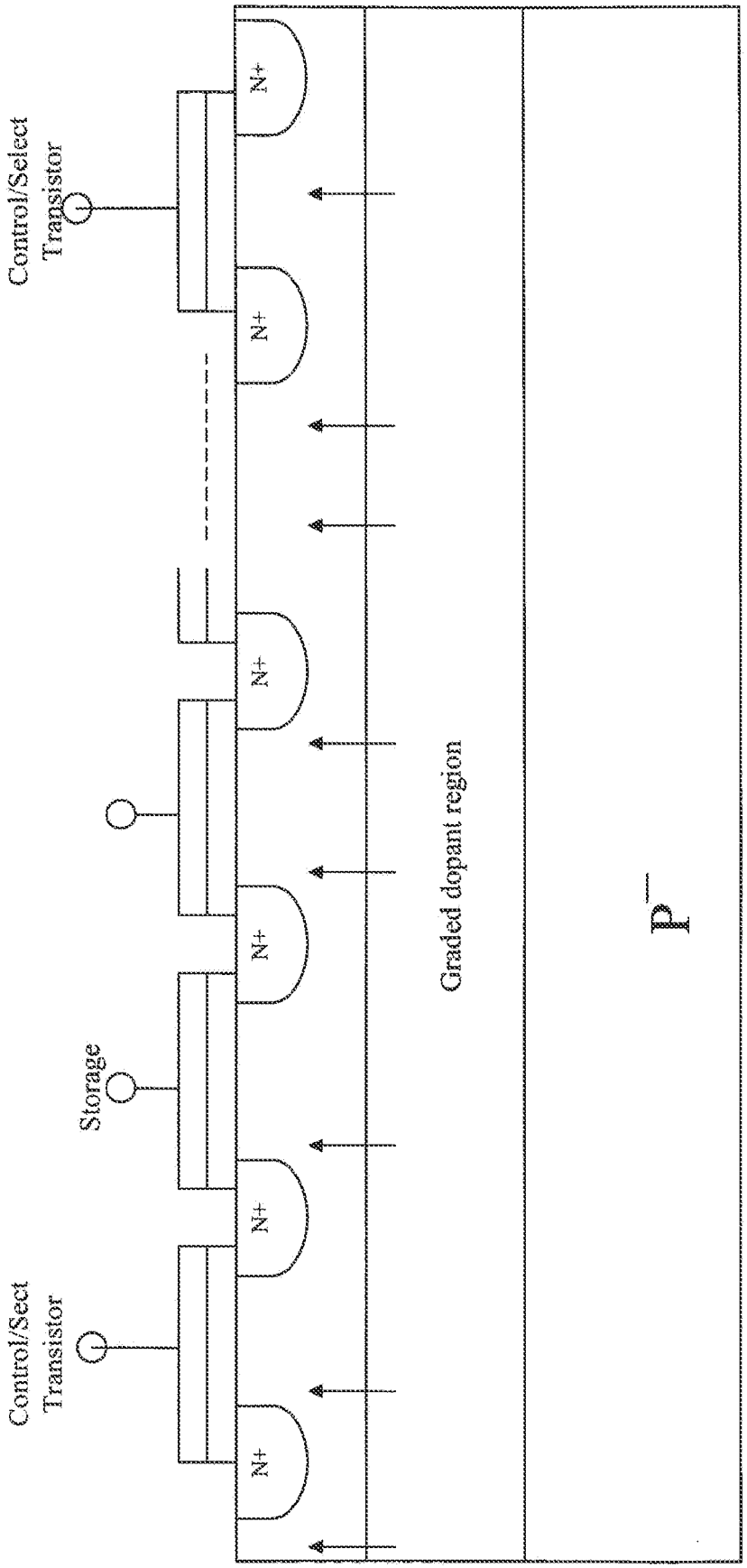
Control/Select Transistor
Storage
Control/Sect Transistor
N+
N+
N+
N+
N+
N+
Graded dopant region
P⁻

FIGURE 5C

Electronic Acknowledgement Receipt

EFS ID:	43455028
Application Number:	17371839
International Application Number:	
Confirmation Number:	2197
Title of Invention:	SEMICONDUCTOR DEVICES WITH GRADED DOPANT REGIONS
First Named Inventor/Applicant Name:	G.R. MOHAN RAO
Customer Number:	25883
Filer:	Gregory Michael Howison
Filer Authorized By:	
Attorney Docket Number:	GRTD60-35314
Receipt Date:	11-AUG-2021
Filing Date:	09-JUL-2021
Time Stamp:	12:00:40
Application Type:	Utility under 35 USC 111(a)

Payment information:

Submitted with Payment	no

File Listing:

Document Number	Document Description	File Name	File Size(Bytes)/ Message Digest	Multi Part /.zip	Pages (if appl.)
1	Applicant Response to Pre-Exam Formalities Notice	GRT35314ResponseNTCCORRPPRS.pdf	140749 c5bf953560418734698dda9fb92096cd615ce9b1	no	3

Warnings:

Information:					
2	Drawings-only black and white line drawings	GRT35314DWGS.pdf	3531672 969dd9563ede422ad99ba4e86bd6299ca60c5702	no	10
Warnings:					
Information:					
			Total Files Size (in bytes):	3672421	

This Acknowledgement Receipt evidences receipt on the noted date by the USPTO of the indicated documents, characterized by the applicant, and including page counts, where applicable. It serves as evidence of receipt similar to a Post Card, as described in MPEP 503.

New Applications Under 35 U.S.C. 111
If a new application is being filed and the application includes the necessary components for a filing date (see 37 CFR 1.53(b)-(d) and MPEP 506), a Filing Receipt (37 CFR 1.54) will be issued in due course and the date shown on this Acknowledgement Receipt will establish the filing date of the application.
National Stage of an International Application under 35 U.S.C. 371
If a timely submission to enter the national stage of an international application is compliant with the conditions of 35 U.S.C. 371 and other applicable requirements a Form PCT/DO/EO/903 indicating acceptance of the application as a national stage submission under 35 U.S.C. 371 will be issued in addition to the Filing Receipt, in due course.
New International Application Filed with the USPTO as a Receiving Office
If a new international application is being filed and the international application includes the necessary components for an international filing date (see PCT Article 11 and MPEP 1810), a Notification of the International Application Number and of the International Filing Date (Form PCT/RO/105) will be issued in due course, subject to prescriptions concerning national security, and the date shown on this Acknowledgement Receipt will establish the international filing date of the application.

UNITED STATES PATENT AND TRADEMARK OFFICE

UNITED STATES DEPARTMENT OF COMMERCE
United States Patent and Trademark Office
Address: COMMISSIONER FOR PATENTS
P.O. Box 1450
Alexandria, Virginia 22313-1450
www.uspto.gov

APPLICATION NUMBER	FILING or 371(c) DATE	GRP ART UNIT	FIL FEE REC'D	ATTY.DOCKET.NO	TOT CLAIMS	IND CLAIMS
17/371,839	07/09/2021	2812	2820	GRTD60-35314	30	2

CONFIRMATION NO. 2197

FILING RECEIPT

25883
MUNCK WILSON MANDALA L.L.P
P.O. Drawer 800889
DALLAS, TX 75380

OC000000127165595

Date Mailed: 07/23/2021

Receipt is acknowledged of this non-provisional utility patent application. The application will be taken up for examination in due course. Applicant will be notified as to the results of the examination. Any correspondence concerning the application must include the following identification information: the U.S. APPLICATION NUMBER, FILING DATE, NAME OF FIRST INVENTOR, and TITLE OF INVENTION. Fees transmitted by check or draft are subject to collection.

Please verify the accuracy of the data presented on this receipt. If an error is noted on this Filing Receipt, please submit a written request for a corrected Filing Receipt, including a properly marked-up ADS showing the changes with strike-through for deletions and underlining for additions. If you received a "Notice to File Missing Parts" or other Notice requiring a response for this application, please submit any request for correction to this Filing Receipt with your reply to the Notice. When the USPTO processes the reply to the Notice, the USPTO will generate another Filing Receipt incorporating the requested corrections provided that the request is grantable.

Inventor(s)

G.R. MOHAN RAO, ALLEN, TX;

Applicant(s)

GREENTHREAD, LLC, Dallas, TX;

Power of Attorney: The patent practitioners associated with Customer Number 25883

Domestic Priority data as claimed by applicant

This application is a CON of 16/947,294 07/27/2020
which is a CON of 16/717,950 12/17/2019 PAT 10734481
which is a CON of 15/590,282 05/09/2017 PAT 10510842
which is a CON of 14/931,636 11/03/2015 PAT 9647070
which is a CON of 14/515,584 10/16/2014 PAT 9190502
which is a CON of 13/854,319 04/01/2013 ABN
which is a CON of 11/622,496 01/12/2007 PAT 8421195
which is a DIV of 10/934,915 09/03/2004 ABN

Foreign Applications for which priority is claimed (You may be eligible to benefit from the **Patent Prosecution Highway** program at the USPTO. Please see http://www.uspto.gov for more information.) - None.
Foreign application information must be provided in an Application Data Sheet in order to constitute a claim to foreign priority. See 37 CFR 1.55 and 1.76.

Permission to Access Application via Priority Document Exchange: Yes

Permission to Access Search Results: Yes

Applicant may provide or rescind an authorization for access using Form PTO/SB/39 or Form PTO/SB/69 as appropriate.

If Required, Foreign Filing License Granted: 07/22/2021
The country code and number of your priority application, to be used for filing abroad under the Paris Convention, is **US 17/371,839**
Projected Publication Date: To Be Determined - pending completion of Corrected Papers
Non-Publication Request: No
Early Publication Request: No
Title

SEMICONDUCTOR DEVICES WITH GRADED DOPANT REGIONS

Preliminary Class

438

Statement under 37 CFR 1.55 or 1.78 for AIA (First Inventor to File) Transition Applications: No

PROTECTING YOUR INVENTION OUTSIDE THE UNITED STATES

Since the rights granted by a U.S. patent extend only throughout the territory of the United States and have no effect in a foreign country, an inventor who wishes patent protection in another country must apply for a patent in a specific country or in regional patent offices. Applicants may wish to consider the filing of an international application under the Patent Cooperation Treaty (PCT). An international (PCT) application generally has the same effect as a regular national patent application in each PCT-member country. The PCT process **simplifies** the filing of patent applications on the same invention in member countries, but **does not result** in a grant of "an international patent" and does not eliminate the need of applicants to file additional documents and fees in countries where patent protection is desired.

Almost every country has its own patent law, and a person desiring a patent in a particular country must make an application for patent in that country in accordance with its particular laws. Since the laws of many countries differ in various respects from the patent law of the United States, applicants are advised to seek guidance from specific foreign countries to ensure that patent rights are not lost prematurely.

Applicants also are advised that in the case of inventions made in the United States, the Director of the USPTO must issue a license before applicants can apply for a patent in a foreign country. The filing of a U.S. patent application serves as a request for a foreign filing license. The application's filing receipt contains further information and guidance as to the status of applicant's license for foreign filing.

Applicants may wish to consult the USPTO booklet, "General Information Concerning Patents" (specifically, the section entitled "Treaties and Foreign Patents") for more information on timeframes and deadlines for filing foreign patent applications. The guide is available either by contacting the USPTO Contact Center at 800-786-9199, or it can be viewed on the USPTO website at http://www.uspto.gov/web/offices/pac/doc/general/index.html.

For information on preventing theft of your intellectual property (patents, trademarks and copyrights), you may wish to consult the U.S. Government website, http://www.stopfakes.gov. Part of a Department of Commerce initiative, this website includes self-help "toolkits" giving innovators guidance on how to protect intellectual property in specific

countries such as China, Korea and Mexico. For questions regarding patent enforcement issues, applicants may call the U.S. Government hotline at 1-866-999-HALT (1-866-999-4258).

LICENSE FOR FOREIGN FILING UNDER

Title 35, United States Code, Section 184

Title 37, Code of Federal Regulations, 5.11 & 5.15

GRANTED

The applicant has been granted a license under 35 U.S.C. 184, if the phrase "IF REQUIRED, FOREIGN FILING LICENSE GRANTED" followed by a date appears on this form. Such licenses are issued in all applications where the conditions for issuance of a license have been met, regardless of whether or not a license may be required as set forth in 37 CFR 5.15. The scope and limitations of this license are set forth in 37 CFR 5.15(a) unless an earlier license has been issued under 37 CFR 5.15(b). The license is subject to revocation upon written notification. The date indicated is the effective date of the license, unless an earlier license of similar scope has been granted under 37 CFR 5.13 or 5.14.

This license is to be retained by the licensee and may be used at any time on or after the effective date thereof unless it is revoked. This license is automatically transferred to any related applications(s) filed under 37 CFR 1.53(d). This license is not retroactive.

The grant of a license does not in any way lessen the responsibility of a licensee for the security of the subject matter as imposed by any Government contract or the provisions of existing laws relating to espionage and the national security or the export of technical data. Licensees should apprise themselves of current regulations especially with respect to certain countries, of other agencies, particularly the Office of Defense Trade Controls, Department of State (with respect to Arms, Munitions and Implements of War (22 CFR 121-128)); the Bureau of Industry and Security, Department of Commerce (15 CFR parts 730-774); the Office of Foreign AssetsControl, Department of Treasury (31 CFR Parts 500+) and the Department of Energy.

NOT GRANTED

No license under 35 U.S.C. 184 has been granted at this time, if the phrase "IF REQUIRED, FOREIGN FILING LICENSE GRANTED" DOES NOT appear on this form. Applicant may still petition for a license under 37 CFR 5.12, if a license is desired before the expiration of 6 months from the filing date of the application. If 6 months has lapsed from the filing date of this application and the licensee has not received any indication of a secrecy order under 35 U.S.C. 181, the licensee may foreign file the application pursuant to 37 CFR 5.15(b).

SelectUSA

The United States represents the largest, most dynamic marketplace in the world and is an unparalleled location for business investment, innovation, and commercialization of new technologies. The U.S. offers tremendous resources and advantages for those who invest and manufacture goods here. Through SelectUSA, our nation works to promote and facilitate business investment. SelectUSA provides information assistance to the international investor community; serves as an ombudsman for existing and potential investors; advocates on behalf of U.S. cities, states, and regions competing for global investment; and counsels U.S. economic development organizations on investment attraction best practices. To learn more about why the United States is the best country in the world to develop

technology, manufacture products, deliver services, and grow your business, visit http://www.SelectUSA.gov or call +1-202-482-6800.

PATENT APPLICATION FEE DETERMINATION RECORD

Substitute for Form PTO-875

Application or Docket Number
17/371,839

APPLICATION AS FILED - PART I

FOR	(Column 1) NUMBER FILED	(Column 2) NUMBER EXTRA	SMALL ENTITY RATE($)	SMALL ENTITY FEE($)	OR	OTHER THAN SMALL ENTITY RATE($)	OTHER THAN SMALL ENTITY FEE($)
BASIC FEE (37 CFR 1.16(a), (b), or (c))	N/A	N/A	N/A			N/A	320
SEARCH FEE (37 CFR 1.16(k), (i), or (m))	N/A	N/A	N/A			N/A	700
EXAMINATION FEE (37 CFR 1.16(o), (p), or (q))	N/A	N/A	N/A			N/A	800
TOTAL CLAIMS (37 CFR 1.16(i))	30 minus 20 =	* 10			OR	x 100 =	1000
INDEPENDENT CLAIMS (37 CFR 1.16(h))	2 minus 3 =	*				x 480 =	0.00
APPLICATION SIZE FEE (37 CFR 1.16(s))	If the specification and drawings exceed 100 sheets of paper, the application size fee due is $310 ($155 for small entity) for each additional 50 sheets or fraction thereof. See 35 U.S.C. 41(a)(1)(G) and 37 CFR 1.16(s).						0.00
MULTIPLE DEPENDENT CLAIM PRESENT (37 CFR 1.16(j))							0.00
* If the difference in column 1 is less than zero, enter "0" in column 2.			TOTAL			TOTAL	2820

APPLICATION AS AMENDED - PART II

		(Column 1) CLAIMS REMAINING AFTER AMENDMENT		(Column 2) HIGHEST NUMBER PREVIOUSLY PAID FOR	(Column 3) PRESENT EXTRA	SMALL ENTITY RATE($)	SMALL ENTITY ADDITIONAL FEE($)	OR	OTHER THAN SMALL ENTITY RATE($)	OTHER THAN SMALL ENTITY ADDITIONAL FEE($)
AMENDMENT A	Total (37 CFR 1.16(i))	*	Minus	**	=	x =		OR	x =	
AMENDMENT A	Independent (37 CFR 1.16(h))	*	Minus	***	=	x =		OR	x =	
AMENDMENT A	Application Size Fee (37 CFR 1.16(s))									
AMENDMENT A	FIRST PRESENTATION OF MULTIPLE DEPENDENT CLAIM (37 CFR 1.16(j))							OR		
						TOTAL ADD'L FEE		OR	TOTAL ADD'L FEE	

		(Column 1) CLAIMS REMAINING AFTER AMENDMENT		(Column 2) HIGHEST NUMBER PREVIOUSLY PAID FOR	(Column 3) PRESENT EXTRA	SMALL ENTITY RATE($)	SMALL ENTITY ADDITIONAL FEE($)	OR	OTHER THAN SMALL ENTITY RATE($)	OTHER THAN SMALL ENTITY ADDITIONAL FEE($)
AMENDMENT B	Total (37 CFR 1.16(i))	*	Minus	**	=	x =		OR	x =	
AMENDMENT B	Independent (37 CFR 1.16(h))	*	Minus	***	=	x =		OR	x =	
AMENDMENT B	Application Size Fee (37 CFR 1.16(s))									
AMENDMENT B	FIRST PRESENTATION OF MULTIPLE DEPENDENT CLAIM (37 CFR 1.16(j))							OR		
						TOTAL ADD'L FEE		OR	TOTAL ADD'L FEE	

* If the entry in column 1 is less than the entry in column 2, write "0" in column 3.
** If the "Highest Number Previously Paid For" IN THIS SPACE is less than 20, enter "20".
*** If the "Highest Number Previously Paid For" IN THIS SPACE is less than 3, enter "3".
The "Highest Number Previously Paid For" (Total or Independent) is the highest found in the appropriate box in column 1.

UNITED STATES PATENT AND TRADEMARK OFFICE

UNITED STATES DEPARTMENT OF COMMERCE
United States Patent and Trademark Office
Address: COMMISSIONER FOR PATENTS
P.O. Box 1450
Alexandria, Virginia 22313-1450
www.uspto.gov

APPLICATION NUMBER	FILING OR 371(C) DATE	FIRST NAMED APPLICANT	ATTY. DOCKET NO./TITLE
17/371,839	07/09/2021	G.R. MOHAN RAO	GRTD60-35314

CONFIRMATION NO. 2197

FORMALITIES LETTER

OC000000127165596

25883
MUNCK WILSON MANDALA L.L.P
P.O. Drawer 800889
DALLAS, TX 75380

Date Mailed: 07/23/2021

NOTICE TO FILE CORRECTED APPLICATION PAPERS

Filing Date Granted

An application number and filing date have been accorded to this application. The application is informal since it does not comply with the regulations for the reason(s) indicated below. Applicant is given **TWO MONTHS** from the date of this Notice within which to correct the informalities indicated below. Extensions of time may be obtained by filing a petition accompanied by the extension fee under the provisions of 37 CFR 1.136(a).

The required item(s) identified below must be timely submitted to avoid abandonment:

- Replacement drawings in compliance with 37 CFR 1.84 and 37 CFR 1.121(d) are required. The drawings submitted are not acceptable because:
  - The drawings contain excessive text. Suitable descriptive legends may be used, or may be required by the Examiner where necessary for understanding of the drawing but should contain as few words as possible (see 37 CFR 1.84(o)). See Figure(s) 3D.

Applicant is cautioned that correction of the above items may cause the specification and drawings page count to exceed 100 pages. If the specification and drawings exceed 100 pages, applicant will need to submit the required application size fee.

Greenthread Ex. 2071, p. 168 of 211
Semiconductor v. Greenthread
IPR2023-01244

Replies must be received in the USPTO within the set time period or must include a proper Certificate of Mailing or Transmission under 37 CFR 1.8 with a mailing or transmission date within the set time period. For more information and a suggested format, see Form PTO/SB/92 and MPEP 512.

Replies should be mailed to:

Mail Stop Missing Parts
Commissioner for Patents
P.O. Box 1450
Alexandria VA 22313-1450

Registered users of EFS-Web may alternatively submit their reply to this notice via EFS-Web, including a copy of this Notice and selecting the document description "Applicant response to Pre-Exam Formalities Notice". https://sportal.uspto.gov/authenticate/AuthenticateUserLocalEPF.html

For more information about EFS-Web please call the USPTO Electronic Business Center at 1-866-217-9197 or visit our website at http://www.uspto.gov/ebc.

If you are not using EFS-Web to submit your reply, you must include a copy of this notice.

Questions about the contents of this notice and the requirements it sets forth should be directed to the Office of Data Management, Application Assistance Unit, at **(571) 272-4000** or **(571) 272-4200** or **1-888-786-0101**.

/hnguyen/

Greenthread Ex. 2071, p. 169 of 211
Semiconductor v. Greenthread
IPR2023-01244

Doc Code: PA..
Document Description: Power of Attorney

PTO/AIA/82A (07-13)
Approved for use through 03/31/2021. OMB 0651-0035
U.S. Patent and Trademark Office; U.S. DEPARTMENT OF COMMERCE
Under the Paperwork Reduction Act of 1995, no persons are required to respond to a collection of information unless it displays a valid OMB control number.

TRANSMITTAL FOR POWER OF ATTORNEY TO ONE OR MORE REGISTERED PRACTITIONERS

NOTE: This form is to be submitted with the Power of Attorney by Applicant form (PTO/AIA/82B) to identify the application to which the Power of Attorney is directed, in accordance with 37 CFR 1.5, unless the application number and filing date are identified in the Power of Attorney by Applicant form. If neither form PTO/AIA/82A nor form PTO/AIA82B identifies the application to which the Power of Attorney is directed, the Power of Attorney will not be recognized in the application.

Application Number	
Filing Date	
First Named Inventor	G.R. MOHAN RAO
Title	SEMICONDUCTOR DEVICES WITH GRADED DOPANT REGIONS
Art Unit	
Examiner Name	
Attorney Docket Number	GRTD60-35314

SIGNATURE of Applicant or Patent Practitioner

Signature	/Gregory M. Howison, Reg. #30646/	Date (Optional)	
Name	GREGORY M. HOWISON	Registration Number	30,646
Title (if Applicant is a juristic entity)			
Applicant Name (if Applicant is a juristic entity)			

NOTE: This form must be signed in accordance with 37 CFR 1.33. See 37 CFR 1.4(d) for signature requirements and certifications. If more than one applicant, use multiple forms.

☑ *Total of ONE forms are submitted.

This collection of information is required by 37 CFR 1.131, 1.32, and 1.33. The information is required to obtain or retain a benefit by the public which is to file (and by the USPTO to process) an application. Confidentiality is governed by 35 U.S.C. 122 and 37 CFR 1.11 and 1.14. This collection is estimated to take 3 minutes to complete, including gathering, preparing, and submitting the completed application form to the USPTO. Time will vary depending upon the individual case. Any comments on the amount of time you require to complete this form and/or suggestions for reducing this burden, should be sent to the Chief Information Officer, U.S. Patent and Trademark Office, U.S. Department of Commerce, P.O. Box 1450, Alexandria, VA 22313-1450. DO NOT SEND FEES OR COMPLETED FORMS TO THIS ADDRESS. **SEND TO: Commissioner for Patents, P.O. Box 1450, Alexandria, VA 22313-1450.**

If you need assistance in completing the form, call 1-800-PTO-9199 and select option 2.

Doc Code: PA..
Document Description: Power of Attorney

PTO/AIA/82B (07-13)
Approved for use through 03/31/2021. OMB 0651-0035
U.S. Patent and Trademark Office; U.S. DEPARTMENT OF COMMERCE
Under the Paperwork Reduction Act of 1995, no persons are required to respond to a collection of information unless it displays a valid OMB control number

POWER OF ATTORNEY BY APPLICANT

I hereby revoke all previous powers of attorney given in the application identified in either the attached transmittal letter or the boxes below.

Application Number	Filing Date

(Note: The boxes above may be left blank if information is provided on form PTO/AIA/82A.)

☑ I hereby appoint the Patent Practitioner(s) associated with the following Customer Number as my/our attorney(s) or agent(s), and to transact all business in the United States Patent and Trademark Office connected therewith for the application referenced in the attached transmittal letter (form PTO/AIA/82A) or identified above: 25883

OR

☐ I hereby appoint Practitioner(s) named in the attached list (form PTO/AIA/82C) as my/our attorney(s) or agent(s), and to transact all business in the United States Patent and Trademark Office connected therewith for the patent application referenced in the attached transmittal letter (form PTO/AIA/82A) or identified above. (Note: Complete form PTO/AIA/82C.)

Please recognize or change the correspondence address for the application identified in the attached transmittal letter or the boxes above to:

☑ The address associated with the above-mentioned Customer Number

OR

☐ The address associated with Customer Number:

OR

☐ Firm or Individual Name					
Address					
City		State		Zip	
Country					
Telephone		Email			

I am the Applicant (if the Applicant is a juristic entity, list the Applicant name in the box):

GREENTHREAD, LLC

☐ Inventor or Joint Inventor (title not required below)

☐ Legal Representative of a Deceased or Legally Incapacitated Inventor (title not required below)

☑ Assignee or Person to Whom the Inventor is Under an Obligation to Assign (provide signer's title if applicant is a juristic entity)

☐ Person Who Otherwise Shows Sufficient Proprietary Interest (e.g., a petition under 37 CFR 1.46(b)(2) was granted in the application or is concurrently being filed with this document) (provide signer's title if applicant is a juristic entity)

SIGNATURE of Applicant for Patent

The undersigned (whose title is supplied below) is authorized to act on behalf of the applicant (e.g., where the applicant is a juristic entity).

Signature	Philip W. Johns Jr	Date (Optional)	
Name	Philip W. Johns Jr		
Title	Manager	GREENTHREAD, LLC	

NOTE: Signature - This form must be signed by the applicant in accordance with 37 CFR 1.33. See 37 CFR 1.4 for signature requirements and certifications. If more than one applicant, use multiple forms.

☑ Total of ONE forms are submitted.

This collection of information is required by 37 CFR 1.131, 1.32, and 1.33. The information is required to obtain or retain a benefit by the public which is to file (and by the USPTO to process) an application. Confidentiality is governed by 35 U.S.C. 122 and 37 CFR 1.11 and 1.14. This collection is estimated to take 3 minutes to complete, including gathering, preparing, and submitting the completed application form to the USPTO. Time will vary depending upon the individual case. Any comments on the amount of time you require to complete this form and/or suggestions for reducing this burden, should be sent to the Chief Information Officer, U.S. Patent and Trademark Office, U.S. Department of Commerce, P.O. Box 1450, Alexandria, VA 22313-1450. DO NOT SEND FEES OR COMPLETED FORMS TO THIS ADDRESS. **SEND TO: Commissioner for Patents, P.O. Box 1450, Alexandria, VA 22313-1450.**

If you need assistance in completing the form, call 1-800-PTO-9199 and select option 2.

PTO/AIA/01 (06-12)
Approved for use through 01/31/2014. OMB 0651-0032
U.S. Patent and Trademark Office; U.S. DEPARTMENT OF COMMERCE
Under the Paperwork Reduction Act of 1995, no persons are required to respond to a collection of information unless it displays a valid OMB control number.

DECLARATION (37 CFR 1.63) FOR UTILITY OR DESIGN APPLICATION USING AN APPLICATION DATA SHEET (37 CFR 1.76)

Title of Invention	SEMICONDUCTOR DEVICES WITH GRADED DOPANT REGIONS

As the below named inventor, I hereby declare that:

This declaration is directed to: ☑ The attached application, or

☐ United States application or PCT International application number _____

filed on _____.

The above-identified application was made or authorized to be made by me.

I believe that I am the original inventor or an original joint inventor of a claimed invention in the application.

I hereby acknowledge that any willful false statement made in this declaration is punishable under 18 U.S.C. 1001 by fine or imprisonment of not more than five (5) years, or both.

WARNING:

Petitioner/applicant is cautioned to avoid submitting personal information in documents filed in a patent application that may contribute to identity theft. Personal information such as social security numbers, bank account numbers, or credit card numbers (other than a check or credit card authorization form PTO-2038 submitted for payment purposes) is never required by the USPTO to support a petition or an application. If this type of personal information is included in documents submitted to the USPTO, petitioners/applicants should consider redacting such personal information from the documents before submitting them to the USPTO. Petitioner/applicant is advised that the record of a patent application is available to the public after publication of the application (unless a non-publication request in compliance with 37 CFR 1.213(a) is made in the application) or issuance of a patent. Furthermore, the record from an abandoned application may also be available to the public if the application is referenced in a published application or an issued patent (see 37 CFR 1.14). Checks and credit card authorization forms PTO-2038 submitted for payment purposes are not retained in the application file and therefore are not publicly available.

LEGAL NAME OF INVENTOR

Inventor: G.R. Mohan Rao Date (Optional): Sept 30, 2015

Signature: G R Mohan Rao

Note: An application data sheet (PTO/AIA/14 or equivalent), including naming the entire inventive entity, must accompany this form. Use an additional PTO/SB/AIA01 form for each additional inventor.

This collection of information is required by 35 U.S.C. 115 and 37 CFR 1.63. The information is required to obtain or retain a benefit by the public which is to file (and by the USPTO to process) an application. Confidentiality is governed by 35 U.S.C. 122 and 37 CFR 1.11 and 1.14. This collection is estimated to take 1 minute to complete, including gathering, preparing, and submitting the completed application form to the USPTO. Time will vary depending upon the individual case. Any comments on the amount of time you require to complete this form and/or suggestions for reducing this burden, should be sent to the Chief Information Officer, U.S. Patent and Trademark Office, U.S. Department of Commerce, P.O. Box 1450, Alexandria, VA 22313-1450. DO NOT SEND FEES OR COMPLETED FORMS TO THIS ADDRESS. SEND TO: Commissioner for Patents, P.O. Box 1450, Alexandria, VA 22313-1450.

If you need assistance in completing the form, call 1-800-PTO-9199 and select option 2.

ABSTRACT

Most semiconductor devices manufactured today, have uniform dopant concentration, either in the lateral or vertical device active (and isolation) regions. By grading the dopant concentration, the performance in various semiconductor devices can be significantly improved. Performance improvements can be obtained in application specific areas like increase in frequency of operation for digital logic, various power MOSFET and IGBT ICs, improvement in refresh time for DRAMs, decrease in programming time for nonvolatile memory, better visual quality including pixel resolution and color sensitivity for imaging ICs, better sensitivity for varactors in tunable filters, higher drive capabilities for JFETs, and a host of other applications.

Greenthread Ex. 2071, p. 173 of 211
Semiconductor v. Greenthread
IPR2023-01244

WHAT IS CLAIMED IS:

1. A VLSI semiconductor device, comprising:

a substrate of a first doping type at a first doping level having a surface;

a first active region disposed adjacent the surface with a second doping type opposite in conductivity to the first doping type and within which transistors can be formed;

a second active region separate from the first active region disposed adjacent to the first active region and within which transistors can be formed;

transistors formed in at least one of the first active region or second active region;

at least a portion of at least one of the first and second active regions having at least one graded dopant concentration to aid carrier movement from the first and second active regions towards an area of the substrate where there are no active regions; and

at least one well region adjacent to the first or second active region containing at least one graded dopant region, the graded dopant region to aid carrier movement from the surface towards the area of the substrate where there are no active regions, wherein at least some of the transistors form digital logic of the VLSI semiconductor device.

2. The VLSI semiconductor device of Claim 1, wherein the substrate is a p-type substrate.

3. The VLSI semiconductor device of Claim 1, wherein the substrate has epitaxial silicon on top of a nonepitaxial substrate.

4. The VLSI semiconductor device of Claim 1, wherein the first active region and second active region contain digital logic formed by one of either p-channel and n-channel devices.

5. The VLSI semiconductor device of Claim 1, wherein the first active region and second active region contain either p-channel or n-channel devices in n-wells or p-wells, respectively, and each well has at least one graded dopant.

6. The VLSI semiconductor device of Claim 1, wherein the first active region and second active region are each separated by at least one isolation region.

Greenthread Ex. 2071, p. 174 of 211
Semiconductor v. Greenthread
IPR2023-01244

7. The VLSI semiconductor device of Claim 1, wherein the graded dopant is fabricated with an ion implantation process.

8. The VLSI semiconductor device of Claim 1, wherein the first and second active regions are formed adjacent the first surface of the substrate.

9. The VLSI semiconductor device of Claim 1, wherein dopants of the graded dopant concentration in the first active region or the second active region are either p-type or n-type.

10. The VLSI semiconductor device of Claim 1, wherein dopants of the graded dopant concentration in the first active region are both p-type and n-type.

11. The VLSI semiconductor device of Claim 1, wherein dopants of the graded dopant concentration in the second active region are both p-type and n-type.

12. The VLSI semiconductor device of Claim 1, wherein dopants of the graded dopant region in the well region are both p-type and n-type.

13. The VLSI semiconductor device of claim 1, wherein the transistors which can be formed in the first and second active regions are CMOS digital logic transistors requiring at least a source, a drain, a gate and a channel.

14. The VLSI semiconductor device of Claim 1, wherein the device is a dynamic random access memory (DRAM).

15. The VLSI semiconductor device of Claim 1, wherein the device is a complementary metal oxide semiconductor (CMOS) with a nonepitaxial substrate.

16. The VLSI semiconductor device of Claim 1, wherein the device is a flash memory.

17. The VLSI semiconductor device of Claim 1, wherein the device comprises digital logic and capacitors.

18. The VLSI semiconductor device of Claim 1, wherein the device is central processing unit.

19. The VLSI semiconductor device of Claim 1, wherein the device is an image sensor.

20. The VLSI semiconductor device of Claim 1, wherein each of the first and second active regions are in the lateral or vertical direction.

21. A VLSI semiconductor device, comprising:

a substrate of a first doping type at a first doping level having a surface;

a first active region disposed adjacent the surface of the substrate with a second doping type opposite in conductivity to the first doping type and within which transistors can be formed in the surface thereof;

a second active region separate from the first active region disposed adjacent to the first active region and within which transistors can be formed in the surface thereof;

transistors formed in at least one of the first active region or second active region;

at least a portion of at least one of the first and second active regions having at least one graded dopant concentration to aid carrier movement from the surface to an area of the substrate where there are no active regions; and

at least one well region adjacent to the first or second active region containing at least one graded dopant region, the graded dopant region to aid carrier movement from the surface to the area of the substrate where there are no active regions, and wherein the graded dopant concentration is linear, quasilinear, error function, complementary error function, or any combination thereof.

22. The VLSI semiconductor device of Claim 21, wherein the substrate is an n-type substrate.

23. The VLSI semiconductor device of Claim 21, wherein the substrate is a p-type substrate.

24. The VLSI semiconductor device of Claim 21, wherein the substrate has epitaxial silicon on top of a nonepitaxial substrate.

25. The VLSI semiconductor device of Claim 21, wherein the first active region and second active region contain at least one of either p-channel and n-channel devices.

Greenthread Ex. 2071, p. 176 of 211
Semiconductor v. Greenthread
IPR2023-01244

26. The VLSI semiconductor device of Claim 21, wherein the first active region and second active region contain either p-channel or n-channel devices in n-wells or p-wells, respectively, and each well has at least one graded dopant.

27. The VLSI semiconductor device of Claim 21, wherein the first active region and second active region are each separated by at least one isolation region.

28. The VLSI semiconductor device of Claim 21, wherein dopants of the graded dopant concentration in the first active region or the second active region are either p-type or n-type.

29. The VLSI semiconductor device of Claim 21, wherein dopants of the graded dopant concentration in the first active region are both p-type and n-type.

30. The VLSI semiconductor device of Claim 21, wherein dopants of the graded dopant concentration in the second active region are both p-type and n-type.

IN THE UNITED STATES PATENT AND TRADEMARK OFFICE
APPLICATION FOR UNITED STATES PATENT

SEMICONDUCTOR DEVICES WITH GRADED DOPANT REGIONS

Inventor(s):

G. R. Mohan Rao – Allen, Texas

Attorneys:
Munck Wilson Mandala, L.L.P.
600 Banner Place Tower
12770 Coit Road
Dallas, Texas 75251
(972) 628-3600

Greenthread Ex. 2071, p. 178 of 211
Semiconductor v. Greenthread
IPR2023-01244

IN THE UNITED STATES PATENT AND TRADEMARK OFFICE

SEMICONDUCTOR DEVICES WITH GRADED DOPANT REGIONS

CROSS-REFERENCE TO RELATED APPLICATIONS

[0001] This application is a Continuation of U.S. Patent Application No. 16/947,294, filed July 27, 2020, entitled SEMICONDUCTOR DEVICES WITH GRADED DOPANT REGIONS, which is a Continuation of U.S. Patent Application No. 16/717,950, filed December 17, 2019, entitled SEMICONDUCTOR DEVICES WITH GRADED DOPANT REGIONS, issued as U.S. Patent No. 10,734,481 on August 04, 2020. U.S. Patent Application No. 16/717,950 is a Continuation of U.S. Patent Application No. 15/590,282, filed May 9, 2017, entitled SEMICONDUCTOR DEVICES WITH GRADED DOPANT REGIONS, issued as U.S. Patent No. 10,510, 842 on December 17, 2019, which is a Continuation of U.S. Patent Application No. 14/931,636, filed November 3, 2015, entitled SEMICONDUCTOR DEVICES WITH GRADED DOPANT REGIONS, issued as U.S. Patent No. 9,647,070 on May 9, 2017, which is Continuation of U.S. Patent Application No. 14/515,584, filed October 16, 2014, entitled SEMICONDUCTOR DEVICES WITH GRADED DOPANT REGIONS, issued as U.S. Patent No. 9,190,502 on November 17, 2015, which is a Continuation of U.S. Patent Application No. 13/854,319 filed April 1, 2013, entitled SEMICONDUCTOR DEVICES WITH GRADED DOPANT REGIONS, which is a Continuation of 11/622,496, filed January 12, 2007, entitled SEMICONDUCTOR DEVICES WITH GRADED DOPANT REGIONS, issued as U.S. Patent No. 8,421,195 on April 16, 2013, which is a Divisional of U.S. Patent Application No. 10/934,915, filed September 3, 2004. The disclosures of which are incorporated herein by reference in their entirety.

TECHNICAL FIELD

[0002] This present invention relates to all semiconductor devices and systems. Particularly it applies to diffused diodes, avalanche diodes, Schottky devices, power MOS transistors, JFET's, RF bipolar transistors, IGBTs (Insulated Gate Bipolar Transistors), varactors, digital VLSI, mixed signal circuits and sensor devices including camera ICs employing CCD (Charge Coupled Device) as well as CMOS technologies.

Greenthread Ex. 2071, p. 179 of 211
Semiconductor v. Greenthread
IPR2023-01244

BACKGROUND

[0003] Bipolar Junction Transistors (BJT) are classified as minority carrier devices because minority carriers are the principle device conduction mechanism. However, majority carriers also play a small but finite role in modulating the conductivity in BJTs. Consequently, both carriers (electrons and holes) play a role in the switching performance of BJTs. The maximum frequency of operation in BJTs is limited by the base transit time as well as the quick recombination of the majority carriers when the device is switched off (prior to beginning the next cycle). The dominant carrier mechanism in BJTs is carrier diffusion. The carrier drift current component is fairly small, especially in uniformly doped base BJTs. Efforts have been made in graded base transistors to create an aiding drift field to enhance the diffusing minority carrier's speed from emitter to collector. However, most semiconductor devices, including various power MOSFETs (traditional, DMOS, lateral, vertical and a host of other configurations), IGBT's (Insulated Gated Base Transistors), still use a uniformly doped 'drift epitaxial' region in the base. FIG. 1 shows the relative doping concentration versus distance in a BJT. FIG. 2 shows the uniformly doped epi region in an IGBT. In contrast to BJTs, MOS devices are majority carrier devices for conduction. The conduction is channel dominated. The channel can be a surface in one plane in planar devices. The surface can also be on the sidewalls in a vertical device. Other device architectures to combine planar and vertical conductions are also possible. The maximum frequency of operation is dictated primarily by source-drain separation distance. Most MOS devices use a uniformly doped substrate (or a well region). When a MOSFET is optimally integrated with a BJT in a monolithic fashion, an IGBT results. The IGBT inherits the advantages of both MOSFET and BJT. It also brings new challenges because the required characteristics (electron transit and hole recombination as fast as possible in n-channel IGBT) necessitate different dopant gradients either in the same layer at different positions, or at the interfaces of similar or dissimilar layers.

[0004] Retrograde wells have been attempted, with little success, to help improve soft error immunity in SRAMs and visual quality in imaging circuits. FIG. 3A shows a typical CMOS VLSI device employing a twin well substrate, on which active devices are subsequently fabricated. FIGS. 3B, 3C, and 3D illustrate device cross sections, as practiced today. Retrograde and halo wells have also been attempted to improve refresh time in DRAMs (dynamic random-access memories), as well as, reducing dark current (background noise) and enhance RGB (Red, Green,

Greenthread Ex. 2071, p. 180 of 211
Semiconductor v. Greenthread
IPR2023-01244

Blue) color resolution in digital camera ICs. Most of these techniques either divert the minority carriers away from the active regions of critical charge storage nodes at the surface, or, increase minority carrier density locally as the particular application requires.

Greenthread Ex. 2071, p. 181 of 211
Semiconductor v. Greenthread
IPR2023-01244

BRIEF DESCRIPTION OF THE DRAWINGS

[0005] For a more complete understanding of the present invention, and the advantages thereof, reference is now made to the following descriptions taken in conjunction with the accompanying drawings, in which:

[0006] FIG. 1 illustrates the relative doping profiles of emitter, base and collector for the two most popular bipolar junction transistors: namely, uniform base ("A") and graded base ("B");

[0007] FIG. 2 illustrates the cross section of a commercial IGBT with a uniform epitaxial drift region (base);

[0008] FIGS. 3A, 3B, 3C, and 3D illustrate cross sections of commonly used prior art CMOS silicon substrates; FIG. 3A showing a typical prior art IC with two wells (one n^-well in which p-channel transistors are subsequently fabricated and one p^-well in which n-channel transistors are subsequently fabricated); FIG 3B showing a prior art EEPROM (Electronically Erasable Programmable Read-Only Memory) memory cell having a tunnel insulator; FIG. 3C showing a prior art DRAM memory cell; and FIG. 3D showing a prior art NAND flash memory cell;

[0009] FIG. 4 illustrates the cross section of an IGBT, using one embodiment of the invention described here, where the dopant is optimally graded in the epitaxial drift region; and

[0010] FIGS. 5A, 5B, and 5C illustrate the cross sections of a CMOS silicon substrate with two wells and an underlying layer using embodiments of the invention to improve performance in each application—VLSI logic, DRAM/image IC, nonvolatile memory IC.

Greenthread Ex. 2071, p. 182 of 211
Semiconductor v. Greenthread
IPR2023-01244

DETAILED DESCRIPTION

[0011] The relative doping concentrations of emitter and collector regions varies from 10^{18} to $10^{20}/cm^3$, whereas the base region is 10^{14} to $10^{16}/cm^3$ depending on the desired characteristics of the BJT. In graded base p-n-p transistors, the donor dopant concentration may be 10 to 100× at the emitter-base junction, relative to the base-collector junction (1×). The gradient can be linear, quasi linear, exponential or complimentary error function. The relative slope of the donor concentration throughout the base creates a suitable aiding drift electric field, to help the holes (p-n-p transistor) transverse from emitter to collector. Since the aiding drift electric field helps hole conduction, the current gain at a given frequency is enhanced, relative to a uniformly-doped (base) BJT. The improvement in cut-off frequency (or, frequency at unity gain, f_T) can be as large as 2×-5×. Similar performance improvements are also applicable to n-p-n transistors.

[0012] As illustrated in FIG. 4, in one embodiment according to the invention, a donor gradient is established from the emitter-drift epitaxial base region junction of the punch-through IGBT, to the drift epitaxial base region—n^+ buffer layer boundary (electrons in this case are accelerated in their transit from emitter to collector). The "average" base resistance is optimized so that conductivity modulation and lifetime (for minority carriers) in the base region are not compromised. By sweeping the carriers towards the n^+ buffer region a number of advantages are obtained. First, the frequency of operation (combination of t_{on} and t_{off} as is known in the IGBT commercial nomenclature) can be enhanced. Second, and maybe more importantly, during t_{off}, holes can be recombined much quicker at the n^+ buffer layer, compared to the uniformly doped n^-epitaxial drift region by establishing a different dopant gradient near the n^+ buffer layer. It should be noted that the drift region can also be a non-epitaxial silicon substrate. Although epitaxy enhances lifetime, it is not mandatory. Different layers of dopant regions can be transferred through wafer to wafer bonding (or other similar transfer mechanisms) for eventual device fabrication. The "reverse recovery time" for an IGBT is significantly improved due to the optimized graded dopant in the so called "drift region" as well as at the interfaces of the drift region. Graded dopants can also be implemented in the n^+ buffer layer as well as other regions adjacent to the respective layers. Two important performance enhancements are the result of dopant gradients. For example, in an n-channel IGBT, electrons can be swept from source to drain rapidly, while at the same time holes can be recombined closer to the n^+ buffer layer. This can improve $\underline{t_{on}}$ and $\underline{t_{off}}$ in the same device.

Greenthread Ex. 2071, p. 183 of 211
Semiconductor v. Greenthread
IPR2023-01244

[0013] As illustrated in FIGS. 5A, 5B, and 5C, donor gradient is also of benefit to very large scale integrated circuits (VLSI)—VLSI logic, DRAM, nonvolatile memory like NAND flash. Spurious minority carriers can be generated by clock switching in digital VLSI logic and memory ICs. These unwanted carriers can discharge dynamically-held "actively held high" nodes. In most cases, statically-held nodes (with V_{cc}) cannot be affected. Degradation of refresh time in DRAMs is one of the results, because the capacitor holds charge dynamically. Similarly, degradation of CMOS digital images in digital imaging ICs is another result of the havoc caused by minority carriers. Pixel and color resolution can be significantly enhanced in imaging ICs with the embodiments described herein. Creating "subterranean" recombination centers underneath the wells (gold doping, platinum doping) as is done in some high-voltage diodes is not practical for VLSI circuits. Hence, a novel technique is described herein which creates a drift field to sweep these unwanted minority carriers from the active circuitry at the surface into the substrate in a monolithic die as quickly as possible. In a preferred embodiment, the subterranean n^-layer has a graded donor concentration to sweep the minority carriers deep into the substrate. One or more of such layers can also be implemented through wafer to wafer bonding or similar "transfer" mechanisms. This n^-layer can be a deeply-implanted layer. It can also be an epitaxial layer. As desired, the n^-well and p^-wells can also be graded or retrograded in dopants to sweep those carriers away from the surface as well. The graded dopant can also be implemented in surface channel MOS devices to accelerate majority carriers towards the drain. To decrease programming time in nonvolatile memory devices, carriers should be accelerated towards the surface when programming of memory cells is executed. The graded dopant can also be used to fabricate superior Junction Field-Effect transistors where the "channel pinch-off" is controlled by a graded channel instead of a uniformly doped channel (as practiced in the prior art).

[0014] One of ordinary skill and familiarity in the art will recognize that the concepts taught herein can be customized and tailored to a particular application in many advantageous ways. For instance, minority carriers can be channeled to the surface to aid programming in nonvolatile memory devices (NOR, NAND, multivalued-cell). Moreover, single-well, and triple-well CMOS fabrication techniques can also be optimized to incorporate these embodiments individually and collectively. Any modifications of such embodiments (described here) fall within the spirit and scope of the invention. Hence, they fall within the scope of the claims described below.

Greenthread Ex. 2071, p. 184 of 211
Semiconductor v. Greenthread
IPR2023-01244

[0015] Although the invention has been described with reference to specific embodiments, these descriptions are not meant to be construed in a limiting sense. Various modifications of the disclosed embodiments, as well as alternative embodiments of the invention will become apparent to persons skilled in the art upon reference to the description of the invention. It should be appreciated by those skilled in the art that the conception and the specific embodiment disclosed may be readily utilized as a basis for modifying or designing other structures for carrying out the same purposes of the present invention. It should also be realized by those skilled in the art that such equivalent constructions do not depart from the spirit and scope of the invention as set forth in the appended claims.

[0016] It is therefore, contemplated that the claims will cover any such modifications or embodiments that fall within the true scope of the invention.

Greenthread Ex. 2071, p. 185 of 211
Semiconductor v. Greenthread
IPR2023-01244

Under the Paperwork Reduction Act of 1995, no persons are required to respond to a collection of information unless it contains a valid OMB control number.

Application Data Sheet 37 CFR 1.76	Attorney Docket Number	GRTD60-35314
	Application Number	
Title of Invention	SEMICONDUCTOR DEVICES WITH GRADED DOPANT REGIONS	

The application data sheet is part of the provisional or nonprovisional application for which it is being submitted. The following form contains the bibliographic data arranged in a format specified by the United States Patent and Trademark Office as outlined in 37 CFR 1.76.
This document may be completed electronically and submitted to the Office in electronic format using the Electronic Filing System (EFS) or the document may be printed and included in a paper filed application.

Secrecy Order 37 CFR 5.2:

☐ Portions or all of the application associated with this Application Data Sheet may fall under a Secrecy Order pursuant to 37 CFR 5.2 (Paper filers only. Applications that fall under Secrecy Order may not be filed electronically.)

Inventor Information:

Inventor 1 Remove

Legal Name

Prefix	Given Name	Middle Name	Family Name	Suffix
	G.R. MOHAN		RAO	

Residence Information (Select One) ● US Residency Non US Residency Active US Military Service

City	ALLEN	State/Province	TX	Country of Residence i	US

Mailing Address of Inventor:

Address 1	1611 WILLINGHAM DRIVE		
Address 2			
City	ALLEN	State/Province	TX
Postal Code	75013	Country i	US

All Inventors Must Be Listed - Additional Inventor Information blocks may be generated within this form by selecting the **Add** button. Add

Correspondence Information:

Enter either Customer Number or complete the Correspondence Information section below.
For further information see 37 CFR 1.33(a).

☐ **An Address is being provided for the correspondence Information of this application.**

Customer Number	25883		
Email Address		Add Email	Remove Email

Application Information:

Title of the Invention	SEMICONDUCTOR DEVICES WITH GRADED DOPANT REGIONS		
Attorney Docket Number	GRTD60-35314	Small Entity Status Claimed	☐
Application Type	Nonprovisional		
Subject Matter	Utility		
Total Number of Drawing Sheets (if any)		Suggested Figure for Publication (if any)	

Under the Paperwork Reduction Act of 1995, no persons are required to respond to a collection of information unless it contains a valid OMB control number.

Application Data Sheet 37 CFR 1.76	Attorney Docket Number	GRTD60-35314
	Application Number	
Title of Invention	SEMICONDUCTOR DEVICES WITH GRADED DOPANT REGIONS	

Filing By Reference:

Only complete this section when filing an application by reference under 35 U.S.C. 111(c) and 37 CFR 1.57(a). Do not complete this section if application papers including a specification and any drawings are being filed. Any domestic benefit or foreign priority information must be provided in the appropriate section(s) below (i.e., "Domestic Benefit/National Stage Information" and "Foreign Priority Information").

For the purposes of a filing date under 37 CFR 1.53(b), the description and any drawings of the present application are replaced by this reference to the previously filed application, subject to conditions and requirements of 37 CFR 1.57(a).

Application number of the previously filed application	Filing date (YYYY-MM-DD)	Intellectual Property Authority or Country

Publication Information:

☐ Request Early Publication (Fee required at time of Request 37 CFR 1.219)

☐ **Request Not to Publish.** I hereby request that the attached application not be published under 35 U.S.C. 122(b) and certify that the invention disclosed in the attached application **has not and will not** be the subject of an application filed in another country, or under a multilateral international agreement, that requires publication at eighteen months after filing.

Representative Information:

Representative information should be provided for all practitioners having a power of attorney in the application. Providing this information in the Application Data Sheet does not constitute a power of attorney in the application (see 37 CFR 1.32).
Either enter Customer Number or complete the Representative Name section below. If both sections are completed the customer Number will be used for the Representative Information during processing.

Please Select One:	● Customer Number	US Patent Practitioner	◯ Limited Recognition (37 CFR 11.9)
Customer Number	25883		

Domestic Benefit/National Stage Information:

This section allows for the applicant to either claim benefit under 35 U.S.C. 119(e), 120, 121, 365(c), or 386(c) or indicate National Stage entry from a PCT application. Providing benefit claim information in the Application Data Sheet constitutes the specific reference required by 35 U.S.C. 119(e) or 120, and 37 CFR 1.78.
When referring to the current application, please leave the "Application Number" field blank.

Prior Application Status	Pending		Remove
Application Number	Continuity Type	Prior Application Number	Filing or 371(c) Date (YYYY-MM-DD)
	Continuation of	16947294	2020-07-27

Under the Paperwork Reduction Act of 1995, no persons are required to respond to a collection of information unless it contains a valid OMB control number.

Application Data Sheet 37 CFR 1.76	Attorney Docket Number	GRTD60-35314
	Application Number	
Title of Invention	SEMICONDUCTOR DEVICES WITH GRADED DOPANT REGIONS	

Prior Application Status	Patented				Remove
Application Number	Continuity Type	Prior Application Number	Filing Date (YYYY-MM-DD)	Patent Number	Issue Date (YYYY-MM-DD)
16947294	Continuation of	16717950	2019-12-17	10734481	2020-08-04
Prior Application Status	Patented				Remove
Application Number	Continuity Type	Prior Application Number	Filing Date (YYYY-MM-DD)	Patent Number	Issue Date (YYYY-MM-DD)
16717950	Continuation of	15590282	2017-05-09	10510842	2019-12-17
Prior Application Status	Patented				Remove
Application Number	Continuity Type	Prior Application Number	Filing Date (YYYY-MM-DD)	Patent Number	Issue Date (YYYY-MM-DD)
15590282	Continuation of	14931636	2015-11-03	9647070	2017-05-09
Prior Application Status	Patented				Remove
Application Number	Continuity Type	Prior Application Number	Filing Date (YYYY-MM-DD)	Patent Number	Issue Date (YYYY-MM-DD)
14931636	Continuation of	14515584	2014-10-16	9190502	2015-11-17
Prior Application Status	Abandoned				Remove
Application Number	Continuity Type	Prior Application Number	Filing or 371(c) Date (YYYY-MM-DD)		
14515584	Continuation of	13854319	2013-04-01		
Prior Application Status	Patented				Remove
Application Number	Continuity Type	Prior Application Number	Filing Date (YYYY-MM-DD)	Patent Number	Issue Date (YYYY-MM-DD)
13854319	Continuation of	11622496	2007-01-12	8421195	2013-04-16
Prior Application Status	Abandoned				Remove
Application Number	Continuity Type	Prior Application Number	Filing or 371(c) Date (YYYY-MM-DD)		
11622496	Division of	10934915	2004-09-03		

Additional Domestic Benefit/National Stage Data may be generated within this form by selecting the **Add** button. Add

Foreign Priority Information:

This section allows for the applicant to claim priority to a foreign application. Providing this information in the application data sheet constitutes the claim for priority as required by 35 U.S.C. 119(b) and 37 CFR 1.55. When priority is claimed to a foreign application that is eligible for retrieval under the priority document exchange program (PDX)[i] the information will be used by the Office to automatically attempt retrieval pursuant to 37 CFR 1.55(i)(1) and (2). Under the PDX program, applicant bears the ultimate responsibility for ensuring that a copy of the foreign application is received by the Office from the participating foreign intellectual property office, or a certified copy of the foreign priority application is filed, within the time period specified in 37 CFR 1.55(g)(1).

Application Data Sheet 37 CFR 1.76	Attorney Docket Number	GRTD60-35314
	Application Number	
Title of Invention	SEMICONDUCTOR DEVICES WITH GRADED DOPANT REGIONS	

Remove

Application Number	Country[i]	Filing Date (YYYY-MM-DD)	Access Code[i] (if applicable)

Additional Foreign Priority Data may be generated within this form by selecting the **Add** button. Add

Statement under 37 CFR 1.55 or 1.78 for AIA (First Inventor to File) Transition Applications

☐ This application (1) claims priority to or the benefit of an application filed before March 16, 2013 and (2) also contains, or contained at any time, a claim to a claimed invention that has an effective filing date on or after March 16, 2013.
NOTE: By providing this statement under 37 CFR 1.55 or 1.78, this application, with a filing date on or after March 16, 2013, will be examined under the first inventor to file provisions of the AIA.

Application Data Sheet 37 CFR 1.76	Attorney Docket Number	GRTD60-35314
	Application Number	
Title of Invention	SEMICONDUCTOR DEVICES WITH GRADED DOPANT REGIONS	

Authorization or Opt-Out of Authorization to Permit Access:

When this Application Data Sheet is properly signed and filed with the application, applicant has provided written authority to permit a participating foreign intellectual property (IP) office access to the instant application-as-filed (see paragraph A in subsection 1 below) and the European Patent Office (EPO) access to any search results from the instant application (see paragraph B in subsection 1 below).

Should applicant choose not to provide an authorization identified in subsection 1 below, applicant **must opt-out** of the authorization by checking the corresponding box A or B or both in subsection 2 below.

NOTE: This section of the Application Data Sheet is **ONLY** reviewed and processed with the **INITIAL** filing of an application. After the initial filing of an application, an Application Data Sheet cannot be used to provide or rescind authorization for access by a foreign IP office(s). Instead, Form PTO/SB/39 or PTO/SB/69 must be used as appropriate.

1. Authorization to Permit Access by a Foreign Intellectual Property Office(s)

A. Priority Document Exchange (PDX) - Unless box A in subsection 2 (opt-out of authorization) is checked, the undersigned hereby **grants the USPTO authority** to provide the European Patent Office (EPO), the Japan Patent Office (JPO), the Korean Intellectual Property Office (KIPO), the State Intellectual Property Office of the People's Republic of China (SIPO), the World Intellectual Property Organization (WIPO), and any other foreign intellectual property office participating with the USPTO in a bilateral or multilateral priority document exchange agreement in which a foreign application claiming priority to the instant patent application is filed, access to: (1) the instant patent application-as-filed and its related bibliographic data, (2) any foreign or domestic application to which priority or benefit is claimed by the instant application and its related bibliographic data, and (3) the date of filing of this Authorization. See 37 CFR 1.14(h)(1).

B. Search Results from U.S. Application to EPO - Unless box B in subsection 2 (opt-out of authorization) is checked, the undersigned hereby **grants the USPTO authority** to provide the EPO access to the bibliographic data and search results from the instant patent application when a European patent application claiming priority to the instant patent application is filed. See 37 CFR 1.14(h)(2).

The applicant is reminded that the EPO's Rule 141(1) EPC (European Patent Convention) requires applicants to submit a copy of search results from the instant application without delay in a European patent application that claims priority to the instant application.

2. Opt-Out of Authorizations to Permit Access by a Foreign Intellectual Property Office(s)

☐ A. Applicant **DOES NOT** authorize the USPTO to permit a participating foreign IP office access to the instant application-as-filed. If this box is checked, the USPTO will not be providing a participating foreign IP office with any documents and information identified in subsection 1A above.

☐ B. Applicant **DOES NOT** authorize the USPTO to transmit to the EPO any search results from the instant patent application. If this box is checked, the USPTO will not be providing the EPO with search results from the instant application.

NOTE: Once the application has published or is otherwise publicly available, the USPTO may provide access to the application in accordance with 37 CFR 1.14.

Under the Paperwork Reduction Act of 1995, no persons are required to respond to a collection of information unless it contains a valid OMB control number.

Application Data Sheet 37 CFR 1.76	Attorney Docket Number	GRTD60-35314
	Application Number	
Title of Invention	SEMICONDUCTOR DEVICES WITH GRADED DOPANT REGIONS	

Applicant Information:

Providing assignment information in this section does not substitute for compliance with any requirement of part 3 of Title 37 of CFR to have an assignment recorded by the Office.

Applicant 1 Remove

If the applicant is the inventor (or the remaining joint inventor or inventors under 37 CFR 1.45), this section should not be completed. The information to be provided in this section is the name and address of the legal representative who is the applicant under 37 CFR 1.43; or the name and address of the assignee, person to whom the inventor is under an obligation to assign the invention, or person who otherwise shows sufficient proprietary interest in the matter who is the applicant under 37 CFR 1.46. If the applicant is an applicant under 37 CFR 1.46 (assignee, person to whom the inventor is obligated to assign, or person who otherwise shows sufficient proprietary interest) together with one or more joint inventors, then the joint inventor or inventors who are also the applicant should be identified in this section. Clear

● Assignee	Legal Representative under 35 U.S.C. 117	Joint Inventor
Person to whom the inventor is obligated to assign.	Person who shows sufficient proprietary interest	

If applicant is the legal representative, indicate the authority to file the patent application, the inventor is:

Name of the Deceased or Legally Incapacitated Inventor:

If the Applicant is an Organization check here. ☒

Organization Name	GREENTHREAD, LLC		
Mailing Address Information For Applicant:			
Address 1	4544 Harrys Lane		
Address 2			
City	Dallas	**State/Province**	TX
Country	US	Postal Code	75229
Phone Number		Fax Number	
Email Address			

Additional Applicant Data may be generated within this form by selecting the Add button. Add

Assignee Information including Non-Applicant Assignee Information:

Providing assignment information in this section does not substitute for compliance with any requirement of part 3 of Title 37 of CFR to have an assignment recorded by the Office.

Under the Paperwork Reduction Act of 1995, no persons are required to respond to a collection of information unless it contains a valid OMB control number.

Application Data Sheet 37 CFR 1.76	Attorney Docket Number	GRTD60-35314
	Application Number	
Title of Invention	SEMICONDUCTOR DEVICES WITH GRADED DOPANT REGIONS	

Assignee 1

Complete this section if assignee information, including non-applicant assignee information, is desired to be included on the patent application publication. An assignee-applicant identified in the "Applicant Information" section will appear on the patent application publication as an applicant. For an assignee-applicant, complete this section only if identification as an assignee is also desired on the patent application publication.

Remove

If the Assignee or Non-Applicant Assignee is an Organization check here. ☐

Prefix	**Given Name**	Middle Name	**Family Name**	Suffix

Mailing Address Information For Assignee including Non-Applicant Assignee:

Address 1			
Address 2			
City		**State/Province**	
Country i		Postal Code	
Phone Number		Fax Number	
Email Address			

Additional Assignee or Non-Applicant Assignee Data may be generated within this form by selecting the Add button. Add

Signature:

Remove

NOTE: This Application Data Sheet must be signed in accordance with 37 CFR 1.33(b). **However, if this Application Data Sheet is submitted with the INITIAL filing of the application and either box A or B is not checked in subsection 2 of the "Authorization or Opt-Out of Authorization to Permit Access" section, then this form must also be signed in accordance with 37 CFR 1.14(c).**

This Application Data Sheet **must** be signed by a patent practitioner if one or more of the applicants is a **juristic entity** (e.g., corporation or association). If the applicant is two or more joint inventors, this form must be signed by a patent practitioner, **all** joint inventors who are the applicant, or one or more joint inventor-applicants who have been given power of attorney (e.g., see USPTO Form PTO/AIA/81) on behalf of **all** joint inventor-applicants.

See 37 CFR 1.4(d) for the manner of making signatures and certifications.

Signature	/Gregory M. Howison, Reg. #30646/			Date (YYYY-MM-DD)	2021-07-09
First Name	Gregory	Last Name	Howison	Registration Number	30646

Additional Signature may be generated within this form by selecting the Add button. Add

Under the Paperwork Reduction Act of 1995, no persons are required to respond to a collection of information unless it contains a valid OMB control number.

Application Data Sheet 37 CFR 1.76	Attorney Docket Number	GRTD60-35314
	Application Number	
Title of Invention	SEMICONDUCTOR DEVICES WITH GRADED DOPANT REGIONS	

This collection of information is required by 37 CFR 1.76. The information is required to obtain or retain a benefit by the public which is to file (and by the USPTO to process) an application. Confidentiality is governed by 35 U.S.C. 122 and 37 CFR 1.14. This collection is estimated to take 23 minutes to complete, including gathering, preparing, and submitting the completed application data sheet form to the USPTO. Time will vary depending upon the individual case. Any comments on the amount of time you require to complete this form and/or suggestions for reducing this burden, should be sent to the Chief Information Officer, U.S. Patent and Trademark Office, U.S. Department of Commerce, P.O. Box 1450, Alexandria, VA 22313-1450. DO NOT SEND FEES OR COMPLETED FORMS TO THIS ADDRESS. **SEND TO: Commissioner for Patents, P.O. Box 1450, Alexandria, VA 22313-1450.**

Privacy Act Statement

The Privacy Act of 1974 (P.L. 93-579) requires that you be given certain information in connection with your submission of the attached form related to a patent application or patent. Accordingly, pursuant to the requirements of the Act, please be advised that: (1) the general authority for the collection of this information is 35 U.S.C. 2(b)(2); (2) furnishing of the information solicited is voluntary; and (3) the principal purpose for which the information is used by the U.S. Patent and Trademark Office is to process and/or examine your submission related to a patent application or patent. If you do not furnish the requested information, the U.S. Patent and Trademark Office may not be able to process and/or examine your submission, which may result in termination of proceedings or abandonment of the application or expiration of the patent.

The information provided by you in this form will be subject to the following routine uses:

1 The information on this form will be treated confidentially to the extent allowed under the Freedom of Information Act (5 U.S.C. 552) and the Privacy Act (5 U.S.C. 552a). Records from this system of records may be disclosed to the Department of Justice to determine whether the Freedom of Information Act requires disclosure of these records.

2. A record from this system of records may be disclosed, as a routine use, in the course of presenting evidence to a court, magistrate, or administrative tribunal, including disclosures to opposing counsel in the course of settlement negotiations.

3 A record in this system of records may be disclosed, as a routine use, to a Member of Congress submitting a request involving an individual, to whom the record pertains, when the individual has requested assistance from the Member with respect to the subject matter of the record.

4. A record in this system of records may be disclosed, as a routine use, to a contractor of the Agency having need for the information in order to perform a contract. Recipients of information shall be required to comply with the requirements of the Privacy Act of 1974, as amended, pursuant to 5 U.S.C. 552a(m).

5. A record related to an International Application filed under the Patent Cooperation Treaty in this system of records may be disclosed, as a routine use, to the International Bureau of the World Intellectual Property Organization, pursuant to the Patent CooperationTreaty.

6. A record in this system of records may be disclosed, as a routine use, to another federal agency for purposes of National Security review (35 U.S.C. 181) and for review pursuant to the Atomic Energy Act (42 U.S.C. 218(c)).

7. A record from this system of records may be disclosed, as a routine use, to the Administrator, General Services, or his/her designee, during an inspection of records conducted by GSA as part of that agency's responsibility to recommend improvements in records management practices and programs, under authority of 44 U.S.C. 2904 and 2906. Such disclosure shall be made in accordance with the GSA regulations governing inspection of records for this purpose, and any other relevant (i.e., GSA or Commerce) directive. Such disclosure shall not be used to make determinations about individuals.

8. A record from this system of records may be disclosed, as a routine use, to the public after either publication of the application pursuant to 35 U.S.C. 122(b) or issuance of a patent pursuant to 35 U.S.C. 151. Further, a record may be disclosed, subject to the limitations of 37 CFR 1.14, as a routine use, to the public if the record was filed in an application which became abandoned or in which the proceedings were terminated and which application is referenced by either a published application, an application open to public inspections or an issued patent.

9. A record from this system of records may be disclosed, as a routine use, to a Federal, State, or local law enforcement agency, if the USPTO becomes aware of a violation or potential violation of law or regulation.

Electronic Patent Application Fee Transmittal

Application Number:	
Filing Date:	
Title of Invention:	SEMICONDUCTOR DEVICES WITH GRADED DOPANT REGIONS
First Named Inventor/Applicant Name:	G. R. Mohan Rao
Filer:	Gregory Michael Howison/Joselyn Rodriguez
Attorney Docket Number:	GRTD60-35314

Filed as Large Entity

Filing Fees for Track I Prioritized Examination - Nonprovisional Application under 35 USC 111(a)

Description	Fee Code	Quantity	Amount	Sub-Total in USD($)
Basic Filing:				
UTILITY APPLICATION FILING	1011	1	320	320
UTILITY SEARCH FEE	1111	1	700	700
UTILITY EXAMINATION FEE	1311	1	800	800
REQUEST FOR PRIORITIZED EXAMINATION	1817	1	4200	4200
Pages:				
Claims:				
CLAIMS IN EXCESS OF 20	1202	10	100	1000
Miscellaneous-Filing:				

Description	Fee Code	Quantity	Amount	Sub-Total in USD($)
PUBL. FEE- EARLY, VOLUNTARY, OR NORMAL	1504	1	0	0
PROCESSING FEE, EXCEPT PROV. APPLS.	1830	1	140	140
Petition:				
Patent-Appeals-and-Interference:				
Post-Allowance-and-Post-Issuance:				
Extension-of-Time:				
Miscellaneous:				
			Total in USD ($)	**7160**

Electronic Acknowledgement Receipt

EFS ID:	43208746
Application Number:	17371839
International Application Number:	
Confirmation Number:	2197
Title of Invention:	SEMICONDUCTOR DEVICES WITH GRADED DOPANT REGIONS
First Named Inventor/Applicant Name:	G. R. Mohan Rao
Customer Number:	25883
Filer:	Gregory Michael Howison/Joselyn Rodriguez
Filer Authorized By:	Gregory Michael Howison
Attorney Docket Number:	GRTD60-35314
Receipt Date:	09-JUL-2021
Filing Date:	
Time Stamp:	15:54:57
Application Type:	Utility under 35 USC 111(a)

Payment information:

Submitted with Payment	yes
Payment Type	CARD
Payment was successfully received in RAM	$7160
RAM confirmation Number	E202179F55414118
Deposit Account	500208
Authorized User	Joselyn Rodriguez

The Director of the USPTO is hereby authorized to charge indicated fees and credit any overpayment as follows:

37 CFR 1.16 (National application filing, search, and examination fees)

37 CFR 1.17 (Patent application and reexamination processing fees)

37 CFR 1.21 (Miscellaneous fees and charges)

File Listing:

Document Number	Document Description	File Name	File Size(Bytes)/ Message Digest	Multi Part /.zip	Pages (if appl.)
1	TrackOne Request	GRT35314TRACKONE.pdf	140549 779d93c31db6608eb657b16f6f66853e26f30ffe	no	2
Warnings:					
Information:					
2	Drawings-only black and white line drawings	GRT35314DWGS.pdf	3441256 31b25c7e387f925f58cd58d1c08f8bd71bdaf80e	no	10
Warnings:					
Information:					
3	Power of Attorney	GRT35314POAEXE.pdf	1583112 08b2695aac1899d04843b5ffb8b114e330f0cdf3	no	2
Warnings:					
Information:					
4	Oath or Declaration filed	GRT35314DECEXE.pdf	102924 425aabcd457f692cf118f871fd294b201f2dee5f	no	1
Warnings:					
Information:					
5		GRT35314CON.pdf	145967 34de3341512aa1ec1f11993602ac6ed6210a5b2e	yes	13

Multipart Description/PDF files in .zip description

Document Description	Start	End
Abstract	13	13
Claims	9	12
Specification	1	8

Warnings:					
Information:					
6	Application Data Sheet	GRT35314ADS.pdf	1874721 78965d0da00b7db97d3f7430b8be76363c3fa998	no	9
Warnings:					
Information:					
7	Fee Worksheet (SB06)	fee-info.pdf	41799 2b3d674d035c0fbe0e3fa6592b303de43ff4633a	no	2
Warnings:					
Information:					
			Total Files Size (in bytes):	7330328	

This Acknowledgement Receipt evidences receipt on the noted date by the USPTO of the indicated documents, characterized by the applicant, and including page counts, where applicable. It serves as evidence of receipt similar to a Post Card, as described in MPEP 503.

<u>New Applications Under 35 U.S.C. 111</u>
If a new application is being filed and the application includes the necessary components for a filing date (see 37 CFR 1.53(b)-(d) and MPEP 506), a Filing Receipt (37 CFR 1.54) will be issued in due course and the date shown on this Acknowledgement Receipt will establish the filing date of the application.
<u>National Stage of an International Application under 35 U.S.C. 371</u>
If a timely submission to enter the national stage of an international application is compliant with the conditions of 35 U.S.C. 371 and other applicable requirements a Form PCT/DO/EO/903 indicating acceptance of the application as a national stage submission under 35 U.S.C. 371 will be issued in addition to the Filing Receipt, in due course.
<u>New International Application Filed with the USPTO as a Receiving Office</u>
If a new international application is being filed and the international application includes the necessary components for an international filing date (see PCT Article 11 and MPEP 1810), a Notification of the International Application Number and of the International Filing Date (Form PCT/RO/105) will be issued in due course, subject to prescriptions concerning national security, and the date shown on this Acknowledgement Receipt will establish the international filing date of the application.

Doc Code: TRACK1.REQ
Document Description: TrackOne Request

PTO/SB/424 (12-11)

CERTIFICATION AND REQUEST FOR PRIORITIZED EXAMINATION UNDER 37 CFR 1.102(e) (Page 1 of 1)

First Named Inventor:	G.R. MOHAN Rao	Nonprovisional Application Number (if known):	
Title of Invention:	SEMICONDUCTOR DEVICES WITH GRADED DOPANT REGIONS		

APPLICANT HEREBY CERTIFIES THE FOLLOWING AND REQUESTS PRIORITIZED EXAMINATION FOR THE ABOVE-IDENTIFIED APPLICATION.

1. The processing fee set forth in 37 CFR 1.17(i), the prioritized examination fee set forth in 37 CFR 1.17(c), and if not already paid, the publication fee set forth in 37 CFR 1.18(d) have been filed with the request. The basic filing fee, search fee, examination fee, and any required excess claims and application size fees are filed with the request or have been already been paid.

2. The application contains or is amended to contain no more than four independent claims and no more than thirty total claims, and no multiple dependent claims.

3. The applicable box is checked below:

I. ☑ Original Application (Track One) - Prioritized Examination under § 1.102(e)(1)

i. (a) The application is an original nonprovisional utility application filed under 35 U.S.C. 111(a). This certification and request is being filed with the utility application via EFS-Web.

---OR---

(b) The application is an original nonprovisional plant application filed under 35 U.S.C. 111(a). This certification and request is being filed with the plant application in paper.

ii. An executed oath or declaration under 37 CFR 1.63 is filed with the application.

II. ☐ Request for Continued Examination - Prioritized Examination under § 1.102(e)(2)

i. A request for continued examination has been filed with, or prior to, this form.
ii. If the application is a utility application, this certification and request is being filed via EFS-Web.
iii. The application is an original nonprovisional utility application filed under 35 U.S.C. 111(a), or is a national stage entry under 35 U.S.C. 371.
iv. This certification and request is being filed prior to the mailing of a first Office action responsive to the request for continued examination.
v. No prior request for continued examination has been granted prioritized examination status under 37 CFR 1.102(e)(2).

Signature /Gregory M. Howison, Reg. #30646/	Date July 9, 2021
Name (Print/Typed) Gregory M. Howison	Practitioner Registration Number 30,646

Note: *Signatures of all the inventors or assignees of record of the entire interest or their representative(s) are required in accordance with 37 CFR 1.33 and 11.18. Please see 37 CFR 1.4(d) for the form of the signature. If necessary, submit multiple forms for more than one signature, see below*.*

☑ *Total of ONE forms are submitted.

Privacy Act Statement

The **Privacy Act of 1974 (P.L. 93-579)** requires that you be given certain information in connection with your submission of the attached form related to a patent application or patent. Accordingly, pursuant to the requirements of the Act, please be advised that: (1) the general authority for the collection of this information is 35 U.S.C. 2(b)(2); (2) furnishing of the information solicited is voluntary; and (3) the principal purpose for which the information is used by the U.S. Patent and Trademark Office is to process and/or examine your submission related to a patent application or patent. If you do not furnish the requested information, the U.S. Patent and Trademark Office may not be able to process and/or examine your submission, which may result in termination of proceedings or abandonment of the application or expiration of the patent.

The information provided by you in this form will be subject to the following routine uses:

1. The information on this form will be treated confidentially to the extent allowed under the Freedom of Information Act (5 U.S.C. 552) and the Privacy Act (5 U.S.C 552a). Records from this system of records may be disclosed to the Department of Justice to determine whether disclosure of these records is required by the Freedom of Information Act.
2. A record from this system of records may be disclosed, as a routine use, in the course of presenting evidence to a court, magistrate, or administrative tribunal, including disclosures to opposing counsel in the course of settlement negotiations.
3. A record in this system of records may be disclosed, as a routine use, to a Member of Congress submitting a request involving an individual, to whom the record pertains, when the individual has requested assistance from the Member with respect to the subject matter of the record.
4. A record in this system of records may be disclosed, as a routine use, to a contractor of the Agency having need for the information in order to perform a contract. Recipients of information shall be required to comply with the requirements of the Privacy Act of 1974, as amended, pursuant to 5 U.S.C. 552a(m).
5. A record related to an International Application filed under the Patent Cooperation Treaty in this system of records may be disclosed, as a routine use, to the International Bureau of the World Intellectual Property Organization, pursuant to the Patent Cooperation Treaty.
6. A record in this system of records may be disclosed, as a routine use, to another federal agency for purposes of National Security review (35 U.S.C. 181) and for review pursuant to the Atomic Energy Act (42 U.S.C. 218(c)).
7. A record from this system of records may be disclosed, as a routine use, to the Administrator, General Services, or his/her designee, during an inspection of records conducted by GSA as part of that agency's responsibility to recommend improvements in records management practices and programs, under authority of 44 U.S.C. 2904 and 2906. Such disclosure shall be made in accordance with the GSA regulations governing inspection of records for this purpose, and any other relevant (*i.e.*, GSA or Commerce) directive. Such disclosure shall not be used to make determinations about individuals.
8. A record from this system of records may be disclosed, as a routine use, to the public after either publication of the application pursuant to 35 U.S.C. 122(b) or issuance of a patent pursuant to 35 U.S.C. 151. Further, a record may be disclosed, subject to the limitations of 37 CFR 1.14, as a routine use, to the public if the record was filed in an application which became abandoned or in which the proceedings were terminated and which application is referenced by either a published application, an application open to public inspection or an issued patent.
9. A record from this system of records may be disclosed, as a routine use, to a Federal, State, or local law enforcement agency, if the USPTO becomes aware of a violation or potential violation of law or regulation.

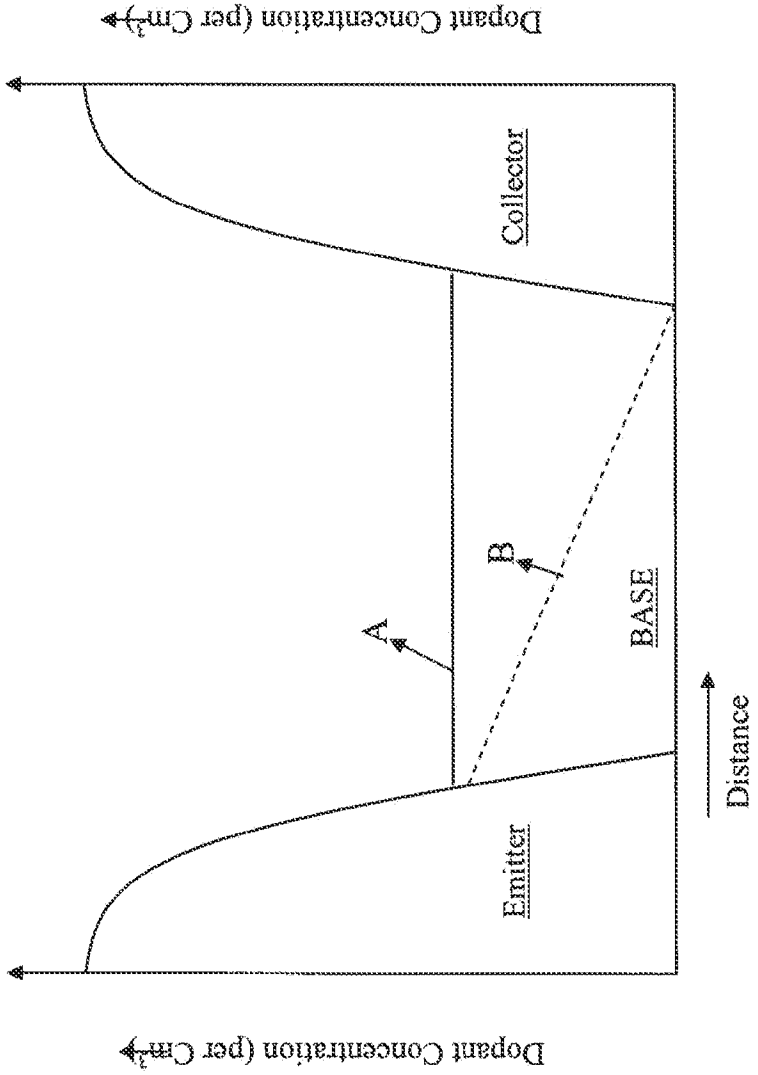

Figure 1 Prior Art

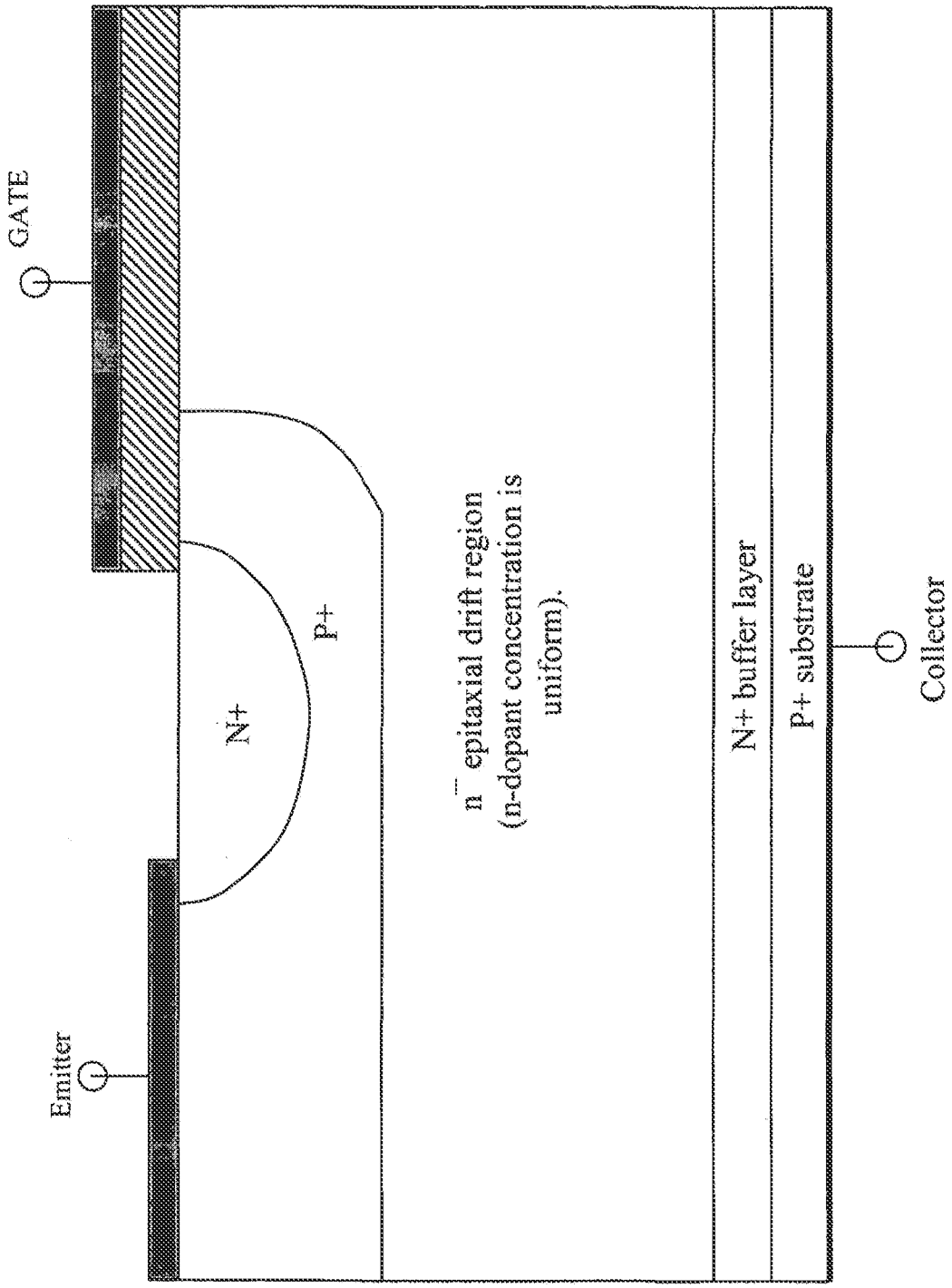

FIGURE 2 Prior art

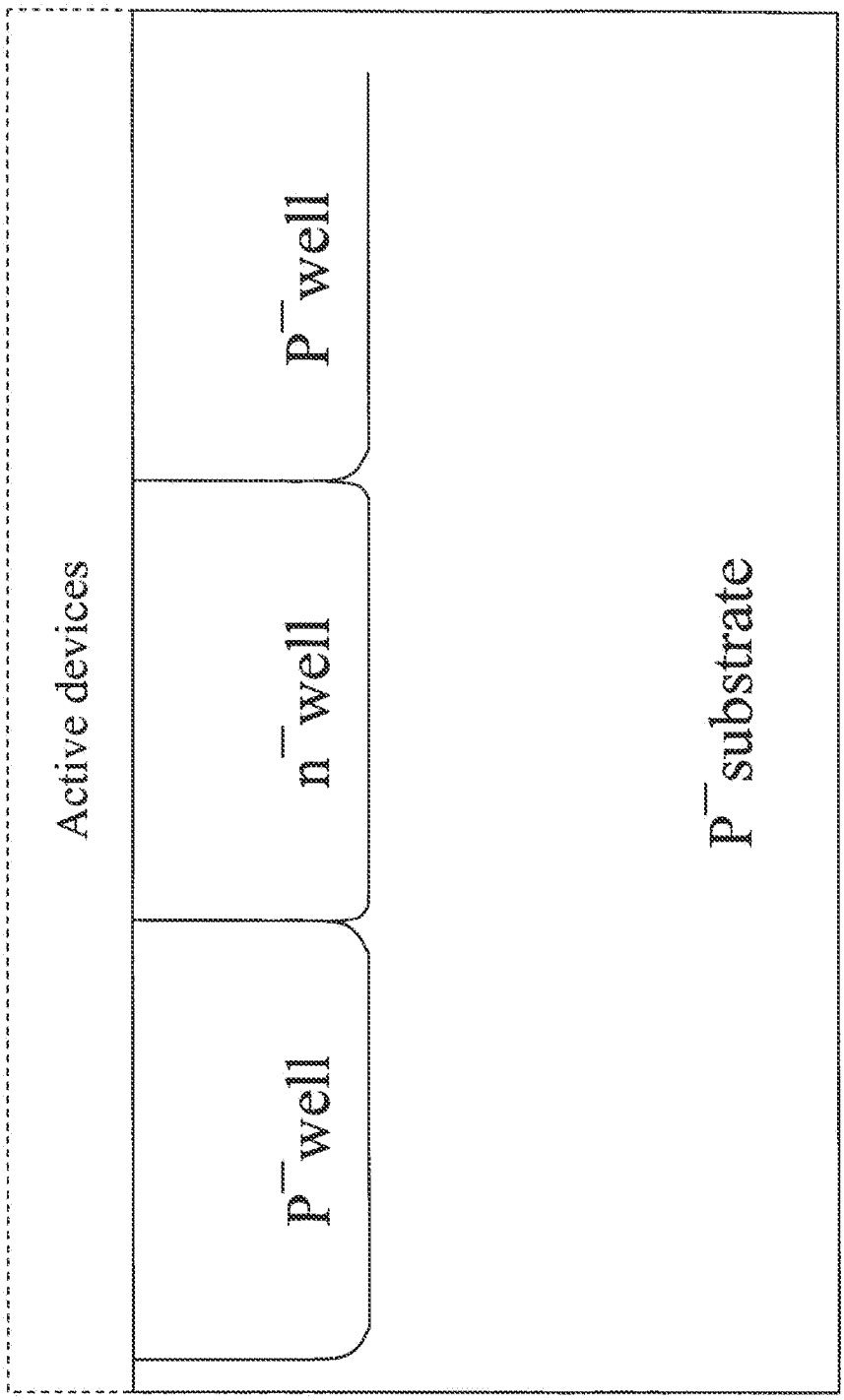

FIGURE 3A Prior art (Twin well CMOS) for a CMOS integrated circuit

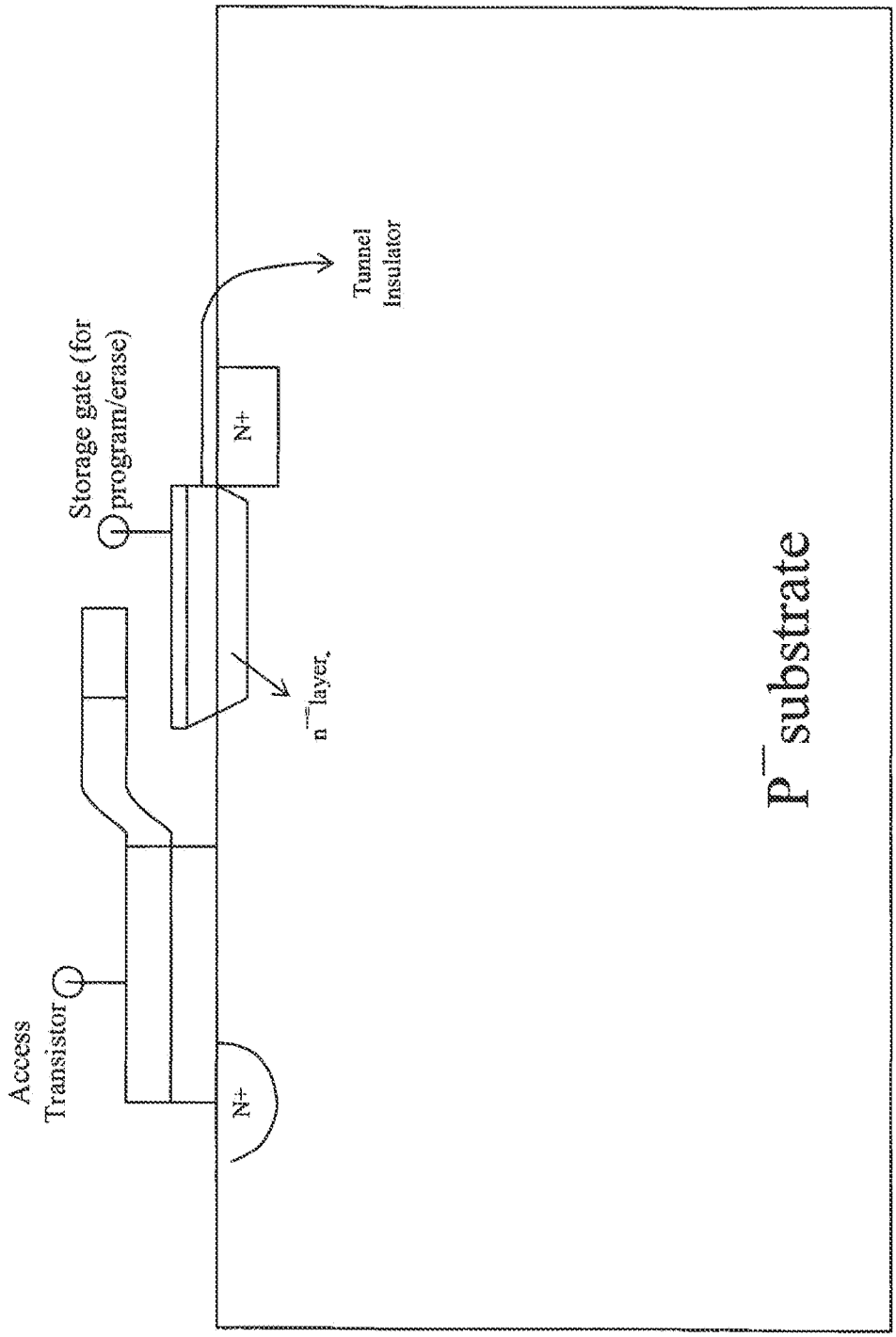

FIGURE 3B Prior art for a two-device EEPROM memory cell

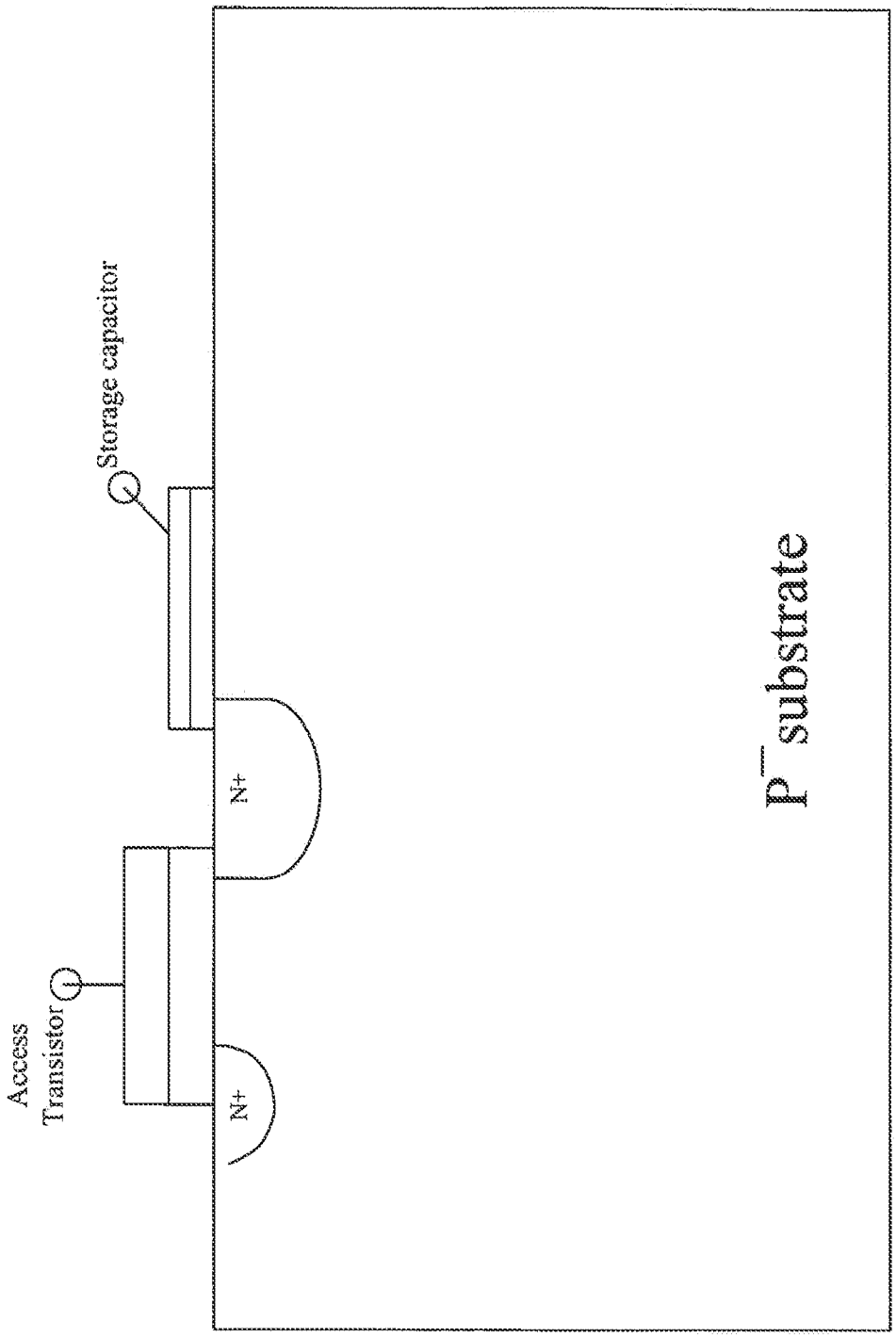

FIGURE 3C Prior art for a 1T-1C DRAM memory cell

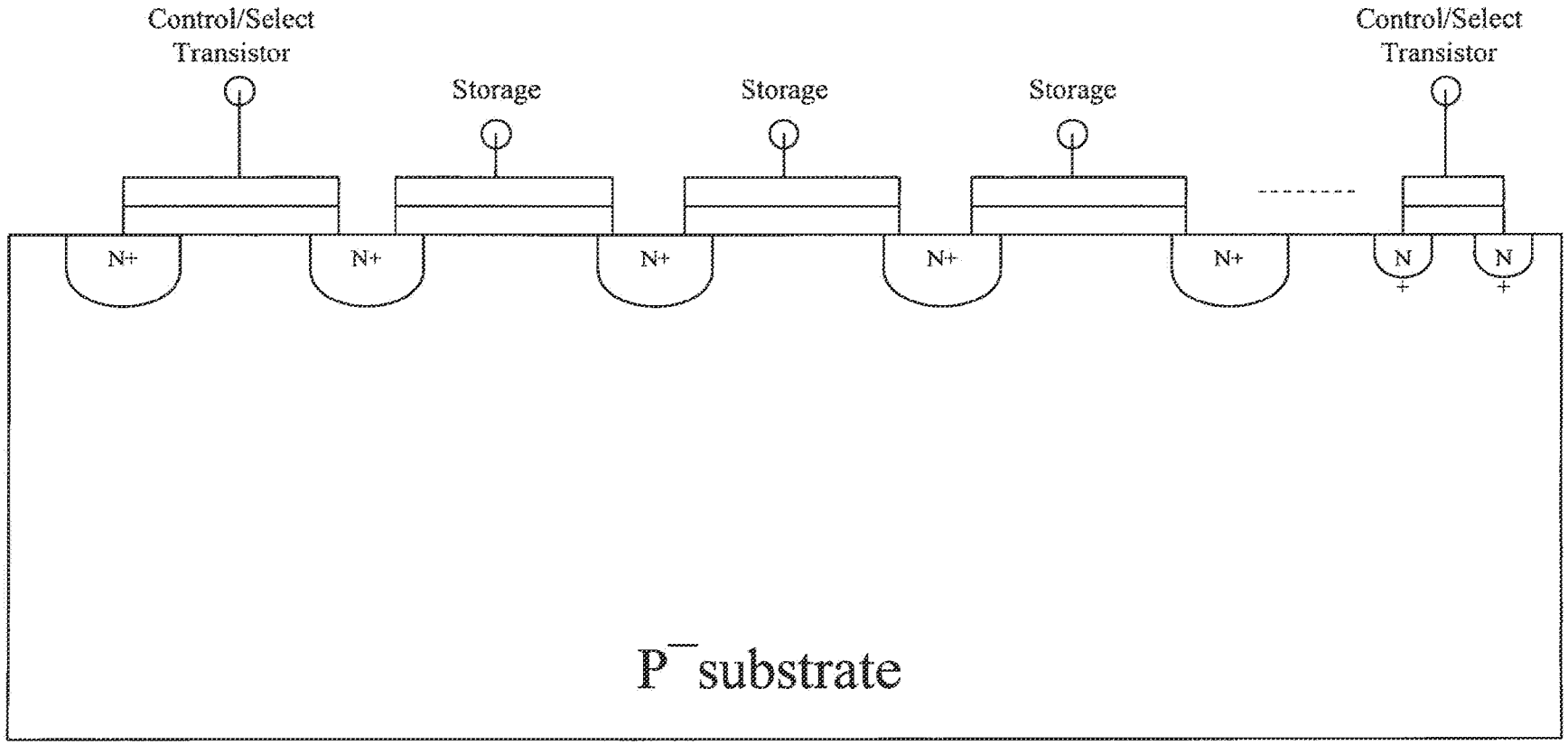

FIGURE 3D Prior art for a NAND flash memory cell

Note: Control/ Sect transistors have a single insulator - traditional MOS transistor.
Storage nodes have a stacked gate structure, typically with a floating gate and control gate comprising the stack.

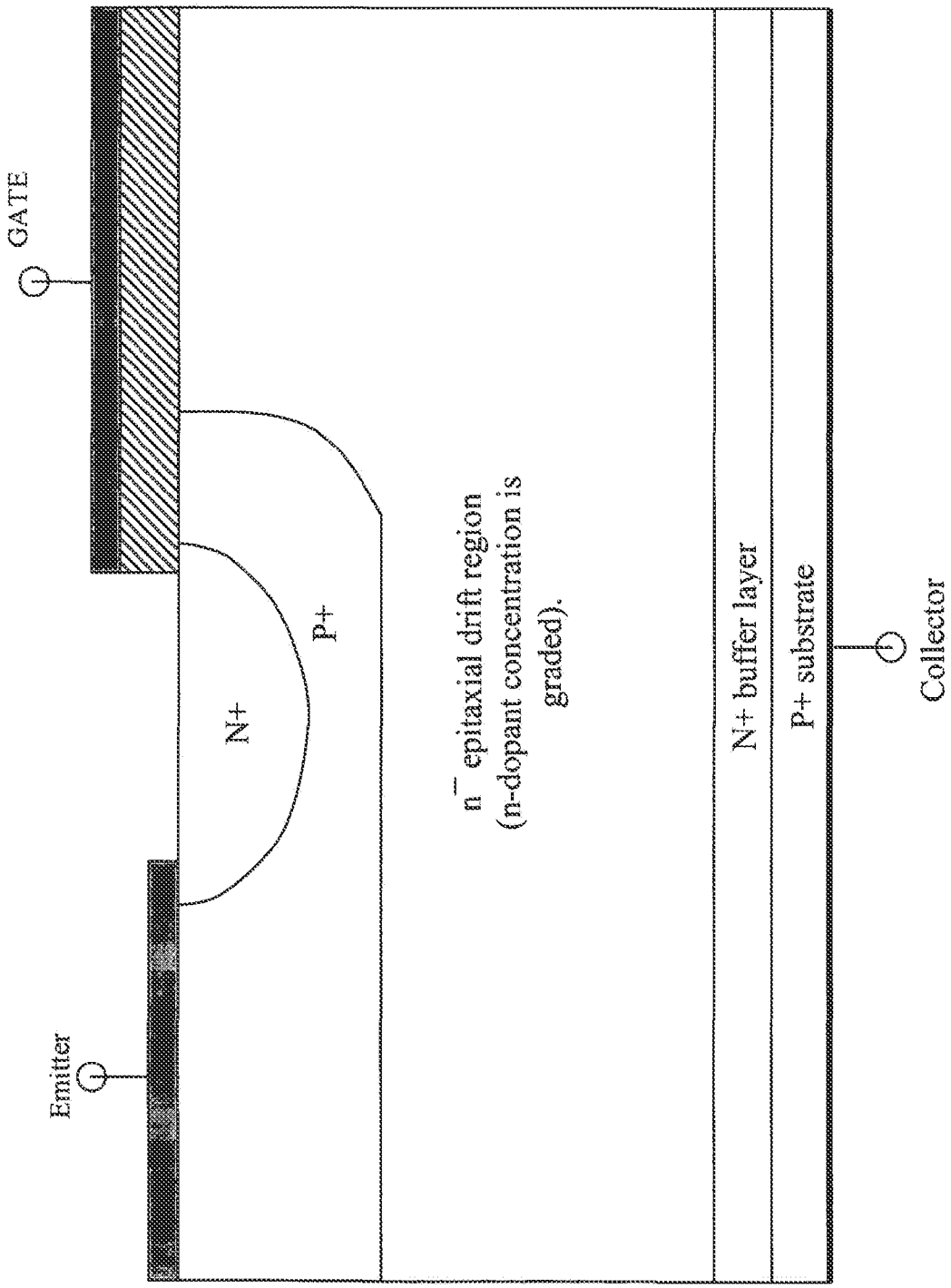

FIGURE 4 A dopant - concentration grinded drift region in a IGBT

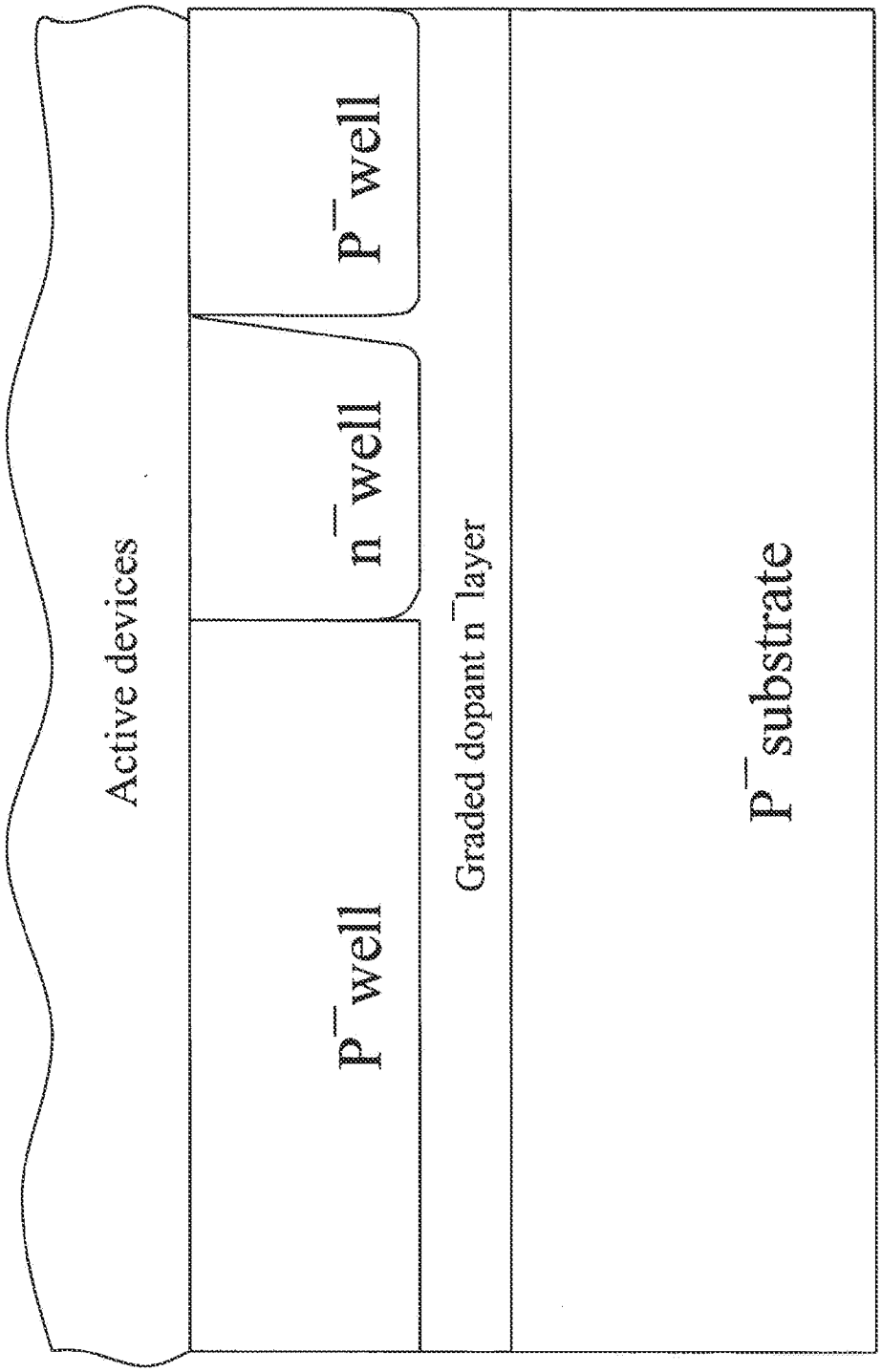

FIGURE 5A A CMOS Substrate for digital, mixed, signal, and senors IC's

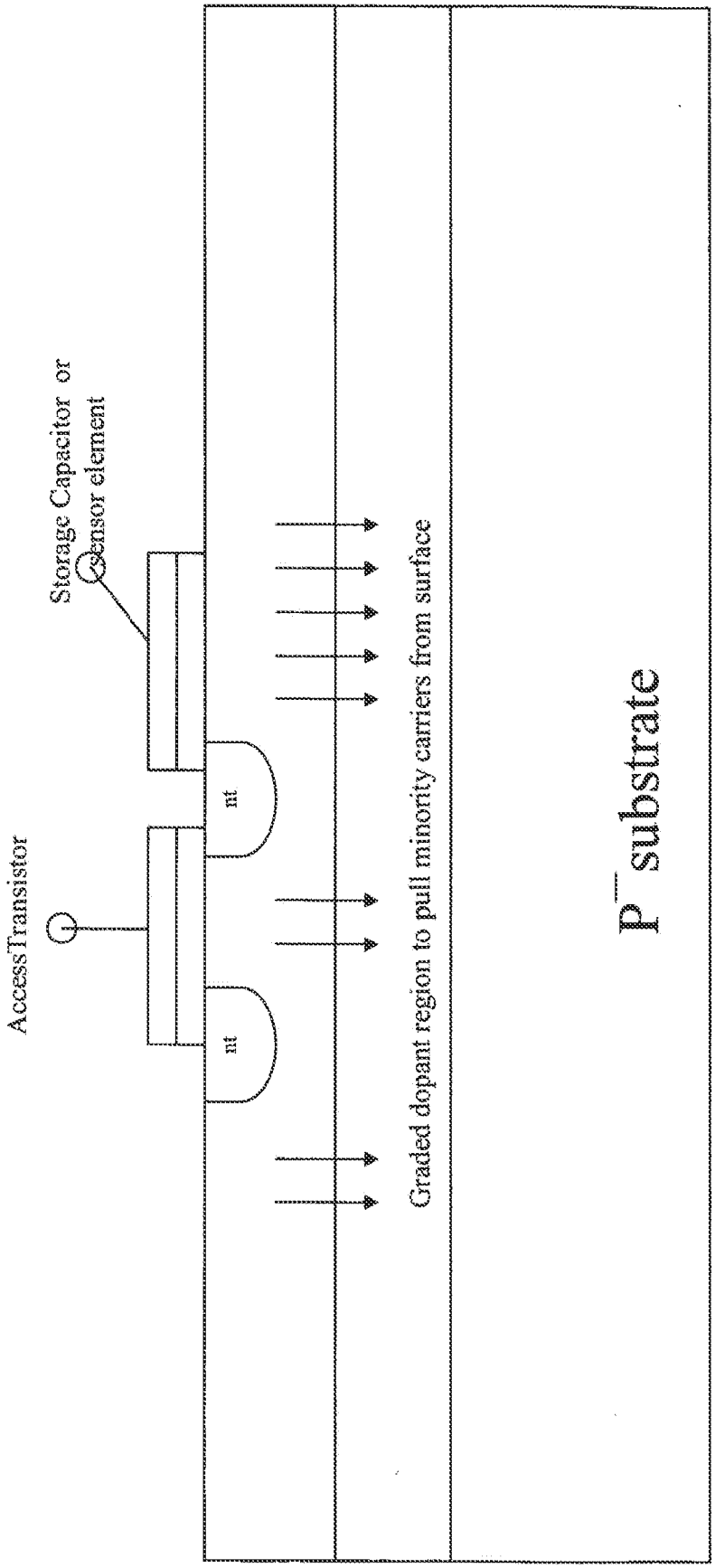

FIGURE 5B CMOS Substrate for a DRAM or image sensor, with one embodiment of the invention

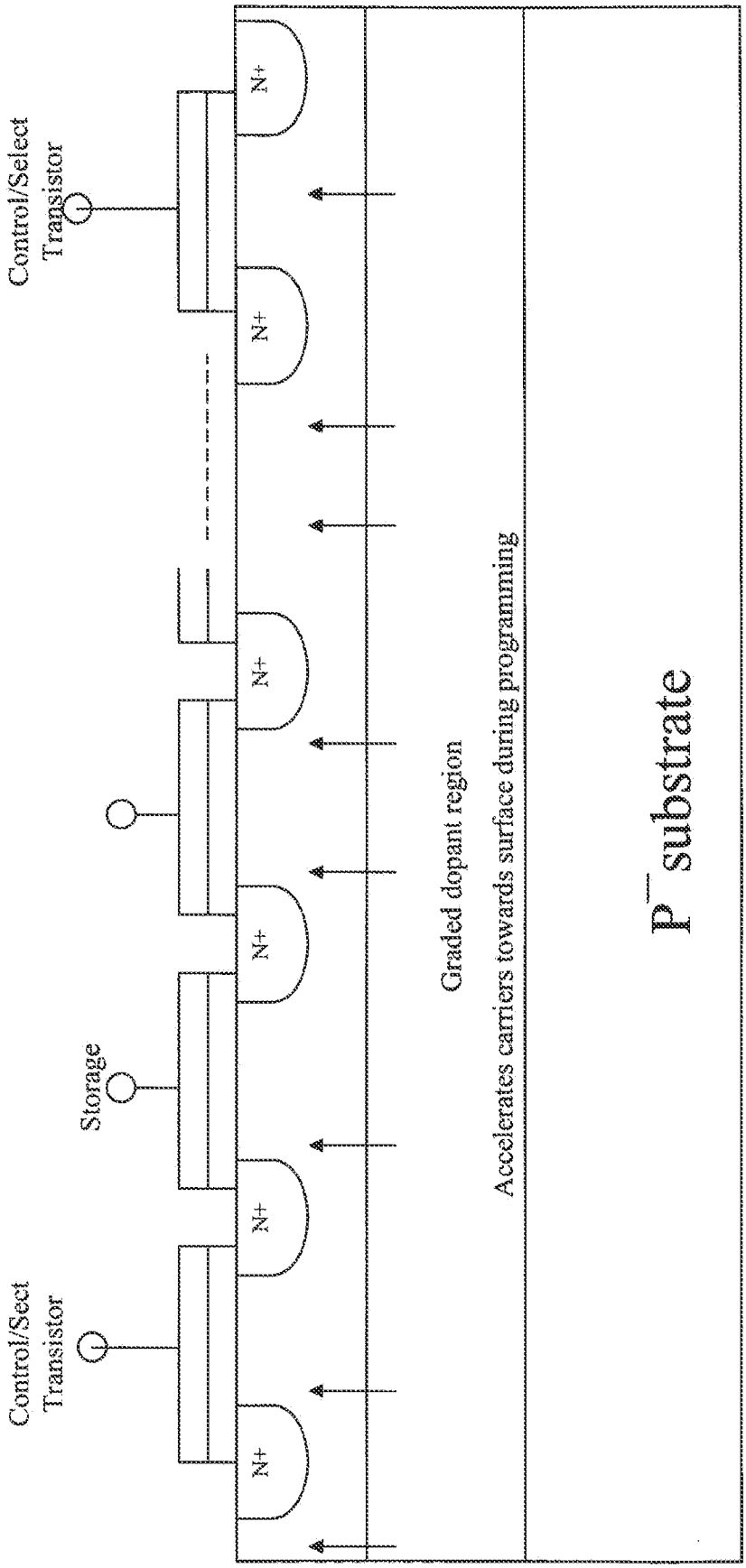

FIGURE 5C CMOS Substrate for a NAND flash device to improve programming times