Paper No. __
Filed: July 26, 2023

UNITED STATES PATENT AND TRADEMARK OFFICE

BEFORE THE PATENT TRIAL AND APPEAL BOARD

LG ELECTRONICS INC.,
Petitioner,

v.

JAWBONE INNOVATIONS, LLC,
Patent Owner.

IPR2023-01248
U.S. Patent No. 8,467,543

PETITION FOR *INTER PARTES* REVIEW OF CLAIMS 1-26 OF U.S. PATENT NO. 8,467,543

TABLE OF CONTENTS

INTRODUCTION 1

I. BACKGROUND 2

A. Noise Cancellation Systems Were Known. 2

1. Estimating and Subtracting Noise From a Desired Signal Was Known. 2

2. Noise Canceling Communications Systems with Microphones Oriented Toward and Away From a Speaker Were Known. 3

3. Noise Canceling Systems Operating in Frequency Sub-bands Were Known. 5

B. Detecting Voicing Activity With Non-Acoustic Sensors Was Known. 6

C. Using Non-Acoustic Sensors for Voice Activity Detection in Noise Cancellation Systems Was Known. 7

II. THE ’543 PATENT 9

A. Overview 9

B. Prosecution History 11

III. STATEMENT OF RELIEF REQUESTED 12

A. Grounds 12

B. The References Are Prior Art 12

C. The References Are Analogous Art. 13

IV. LEVEL OF ORDINARY SKILL 13

V. CLAIM CONSTRUCTION 13

TABLE OF CONTENTS
(continued)

VI. GROUNDS FOR UNPATENTABILITY 14

A. Ground 1: Obviousness over Burnett '919 and Hussain 14

1. Claim 1 14

a. Preamble 14

b. Voice Detection Subsystem 14

c. Denoising Subsystem 17

i. Microphone Array 17

ii. First Microphone 19

iii. Second Microphone 20

iv. Generating Denoised Output 22

v. Using a Frequency Sub-band Method 24

(a) Motivation to Combine 26

(b) Hussain Was Publicly Available 28

d. Independent VAD Sensor 28

2. Claim 2 29

3. Claim 5 31

4. Claim 6 32

5. Claim 7 33

B. Ground 2: Obviousness over Burnett '919, Hussain, and Andrea 33

TABLE OF CONTENTS
(continued)

1. Claim 1 33

a. Denoising Subsystem 33

i. Microphone Array 33

ii. First Microphone 34

iii. Second Microphone 36

b. Motivation to Combine 38

2. Claim 6 41

3. Claim 7 43

4. Claim 8 43

5. Claim 9 45

6. Claim 10 47

7. Claim 11 48

8. Claim 12 49

9. Claim 13 50

10. Claim 26 52

C. Ground 3: Obviousness over Grounds 1 or 2 References and Sasaki 52

1. Claim 14 52

2. Claim 15 56

3. Claim 16 57

TABLE OF CONTENTS
(continued)

4. Claim 17 57

5. Claim 18 58

6. Claim 19 58

7. Claim 20 59

8. Claim 21 59

9. Claim 22 60

10. Claim 23 60

11. Claim 24 60

12. Claim 25 61

D. Ground 4: Obviousness over Grounds 1 or 2 References and Puthuff 62

1. Claim 3 62

2. Motivation to Combine 64

E. Ground 5: Obviousness over Grounds 1 or 2 References and Alcivar 66

1. Claim 4 66

2. Motivation to Combine 67

VII. SECONDARY CONSIDERATIONS OF NONOBVIOUSNESS 69

VIII. DISCRETIONARY DENIAL UNDER §314(A) IS NOT APPROPRIATE 70

A. Co-Pending Litigation (Fintiv) 70

TABLE OF CONTENTS
(continued)

1. Factor 1: Potential Stay 70

2. Factor 2: Proximity of Trial to FWD 71

3. Factor 3: Investment in Parallel Proceeding 72

4. Factor 4: Overlapping Issues 72

5. Factor 5: The Parties 73

6. Factor 6: Other Circumstances 73

B. Prior Petitions for Inter Partes Review (General Plastic) 74

IX. DISCRETIONARY DENIAL UNDER §325(D) IS NOT APPROPRIATE 75

X. MANDATORY NOTICES 76

A. Real Parties-In-Interest (37 C.F.R. §42.8(b)(1)) 76

B. Related Matters (37 C.F.R. §42.8(b)(2)) 76

C. Lead and Backup Counsel (37 C.F.R. §42.8(b)(3)) 77

D. Service Information (37 C.F.R. §42.8(b)(4)) 78

E. Payment of Fees (37 C.F.R. §42.103) 78

F. Grounds for Standing (37 C.F.R. §42.104(a)) 78

CONCLUSION 78

CERTIFICATE OF COMPLIANCE 80

TABLE OF AUTHORITIES

Cases: *Page(s):*

Apple v. Fintiv,
IPR2020-00019, Paper 11 (P.T.A.B. Mar. 20, 2020) 70, 71, 73, 74

Cal. Inst. of Tech. v. Broadcom Ltd.,
25 F.4th 976 (Fed. Cir. 2022) 73

GAF Materials LLC v. Kirsch Research and Dev., LLC,
IPR2021-00192, Paper 14 (P.T.A.B. May 25, 2021) 71

General Plastic Indus. Co., Ltd. v. Canon Kabushiki Kaisha,
IPR2016-01357, Paper 19 (P.T.A.B. Sept. 6, 2017).....74, 75, 76

*Global Tel*Link Corp. v. HLFIP Holding, Inc.*,
IPR2021-00444, Paper 14 (P.T.A.B. Jul. 22, 2021) 71

Google LLC v. Jawbone Innovations, LLC,
IPR2022-00630, Paper 10 (P.T.A.B. Sept. 13, 2022).....73

Huawei Techs. Co. v. WSOU Invs., LLC,
IPR2021-00226, Paper 10 (P.T.A.B. June 10, 2021) 72

KSR Int'l Co. v. Teleflex Inc.,
550 U.S. 398 (2007).....*passim*

Leapfrog Enters. v. Fisher-Price, Inc.,
485 F.3d 1157 (Fed. Cir. 2007) 70

Micron Tech., Inc. v. Lone Star Silicon Innovations, LLC,
IPR2017-01560, Paper 41 (P.T.A.B. Dec. 12, 2018) 20

In re Mraz,
455 F.2d 1069 (C.C.P.A. 1972) 20

NetNut Ltd. v. Bright Data Ltd.,
IPR2021-00465, Paper 11 (P.T.A.B. Aug. 12, 2021).....75

TABLE OF AUTHORITIES
(continued)

Newell Cos. v. Kenney Mfg. Co.,
864 F.2d 757 (Fed. Cir. 1988) 69

Nidec Motor Corp. v. Zhongshan Broad Ocean Motor Co. Ltd.,
868 F.3d 1013 (Fed. Cir. 2017) 14

Qualcomm Inc. v. Monterey Research, LLC,
IPR2020-01491, Paper 36 (P.T.A.B. March 4, 2022) 20

Samsung Elecs. Am. Inc. v. Snik LLC,
IPR2020-01428, Paper 10 (P.T.A.B. Mar. 9, 2021) 72

Sand Revolution II, LLC v. Cont'l Intermodal Grp.-Trucking LLC,
IPR2019-01393, Paper 24 (P.T.A.B. June 16, 2020) 72

Skechers U.S.A., Inc. v. Nike, Inc.,
IPR2021-00160, Paper 10 (P.T.A.B. May 19, 2021) 71

Toshiba Am. Info. Sys., Inc. v. Walletex Microelecs. Ltd.,
IPR2018-01538, Paper 11 (P.T.A.B. Mar. 5, 2019) 74

Uniloc 2017 LLC v. Samsung Elecs. Am., Inc.,
No. 2:19-cv-00259-JRG-RSP, 2020 WL 1433960
(E.D. Tex. Mar. 24, 2020).....71

Unwired Planet, LLC v. Google Inc.,
841 F.3d 995 (Fed. Cir. 2016) 13

Vivid Techs., Inc. v. Am. Sci. & Eng'g, Inc.,
200 F.3d 795 (Fed. Cir. 1999) 14

Statutes and Rules:

35 U.S.C. §102 12

35 U.S.C. §112 14

35 U.S.C. §314 70

TABLE OF AUTHORITIES
(continued)

35 U.S.C. §325 75

TABLE OF EXHIBITS

Exhibit No.	Description
1001	U.S. Patent No. 8,467,543 ("the '543 patent")
1002	Declaration of Richard M. Stern, Ph.D.
1003	U.S. Patent No. 6,377,919 ("Burnett '919")
1004	U.S. Patent No. 5,825,897 ("Andrea")
1005	U.S. Patent No. 5,471,538 ("Sasaki")
1006	Amir Hussain et al., *A New Metric for Selecting Sub-Band Processing in Adaptive Speech Enhancement Systems*, Proc. 5th Eur. Conf. on Speech Comm'n and Tech. (Eurospeech '97) 2611-14 ("Hussain")
1007	International Patent Publication No. WO2000/021194 ("Puthuff")
1008	U.S. Patent No. 3,746,789 ("Alcivar")
1009	U.S. Patent No. 6,006,175 ("Holzrichter '175")
1010	U.S. Patent No. 5,729,694 ("Holzrichter '694")
1011	Bernard Widrow et al., *Adaptive Noise Cancelling: Principles and Applications*, 63 Proc. IEEE 12 (1975) ("Widrow 1975")
1012	Bernard Widrow et al., *Adaptive Signal Processing* (1985) ("Widrow 1985")
1013	U.S. Patent No. 4,177,430 ("Paul")
1014	U.S. Patent No. 4,589,137 ("Miller")
1015	U.S. Patent No. 4,912,767 ("Chang")
1016	U.S. Patent No. 4,956,838 ("Gilloire")
1017	U.S. Patent No. 5,566,167 ("Duttweiler")
1018	European Patent No. EP0615340B1 ("Dennis")
1019	Kenneth N. Stevens et al., The Use of Miniature Accelerometer for Detecting Glottal Waveforms and Nasality (1974) ("Stevens")
1020	Vishu R. Viswanathan et al., *Noise-Immune Speech Transduction Using Multiple Sensors*, Proc. 1985 Int'l Conf. on Acoustics, Speech, and Signal Processing (ICASSP '85) 712-15 ("Viswanathan 1985")

Exhibit No.	Description
1021	Vishu R. Viswanathan & Claudia M. Henry, *Noise-Immune Multisensor Speech Input: Formal Subjective Testing in Operational Conditions*, Proc. 1989 Int'l Conf. on Acoustics, Speech, and Signal Processing (ICASSP '89) 373-76 ("Viswanathan 1989")
1022	Excerpts from the '543 patent's file history
1023	Declaration of Carol S. Peterson
1024	*Eurospeech '97 Index Page*, Internet Archive, https://web.archive.org/web/19971211204358/http://www.cti.gr/~ee-www/ Index.htm (archived Dec. 11, 1997)
1025	*Eurospeech '97 Table of Contents and Abstracts from "Session ThAA Noise Mitigation, Speech Enhancement II"*, Internet Archive, https://web.archive.org/web/20000311093614/http://www.wcl2.ee.upatras.gr/eurthaa.html (archived Oct. 21, 1999)
1026	International Speech Communication Association, *Proceedings Order Form*, Internet Archive, https://web.archive.org/web/20000607171217/http://www.isca-speech.org/proc_order.html (archived June 7, 2000)
1027	*Eurospeech '97 Technical Programme*, Internet Archive, https://web.archive.org/web/19971211205519/ http://www.cti.gr/~ee-www/Progr.htm (archived Dec. 11, 1997)
1028	Curriculum Vitae of Richard M. Stern, Ph.D.

Petitioner LG Electronics Inc. ("LGE" or "Petitioner") requests *inter partes* review ("IPR") of claims 1-26 ("challenged claims") of U.S. Patent 8,467,543 ("the '543 patent").

INTRODUCTION

The challenged claims recite basic systems for processing acoustic signals, such as human speech, to reduce noise. The claimed systems comprise two conventional subsystems: a voice detection subsystem and a denoising subsystem.

The voice detection subsystem includes a sensor and determines whether a user is talking. That subsystem outputs a control signal to the denoising subsystem.

The denoising subsystem comprises a microphone array having two microphones in a conventional configuration: the first microphone is oriented towards the user's mouth (to capture primarily speech) while the second microphone is oriented away from the user's mouth (to capture primarily noise). The denoising subsystem uses well-known adaptive signal processing techniques to reduce the noise in the speech signal. For example, it estimates the noise and subtracts that noise estimate from the acoustic signal. The denoising subsystem uses the control signal from the voice detection subsystem to determine when speech is present.

Such systems were not new. Removing noise by subtracting a noise estimate from an acoustic signal when a voice activity detector indicates that speech is present was widely known. Orienting one microphone towards the mouth and a second

microphone away from the mouth was also well known. The challenged claims merely combine these well-known signal processing features in a conventional manner. Thus, they contribute nothing new to the field. Instead, they impermissibly remove from the public store of knowledge known and conventional methods for denoising speech signals using conventional voice activity detectors. The Board should cancel the challenged claims.

I. BACKGROUND[1]

A. Noise Cancellation Systems Were Known.

1. Estimating and Subtracting Noise From a Desired Signal Was Known.

Adaptive noise reduction systems that estimate noise and subtract it from speech signals have been used for decades. In 1975, Widrow described using a dual-microphone noise-reduction system in which a signal containing noise is "adaptively filtered and subtracted from the primary input" to obtain a denoised signal. (Ex. 1011, Abstract.) Ten years later, Widrow published a textbook on adaptive

[1] Sections I-VII of this petition are substantively identical to the corresponding sections in *Amazon.com, Inc. v. Jawbone Innovations, LLC*, IPR2023-00275, Paper 1 (P.T.A.B. Nov. 28, 2022), which Petitioner seeks to join pursuant to the motion for joinder and consolidation filed herewith.

signal processing that described various systems capable of such adaptive noise reduction. (Ex. 1012, 303-16; Ex. 1002 ¶31.)

Many similar methods for estimating a noise signal and removing it from a primary signal were known long before the ’543 patent was filed. (Ex. 1002 ¶32; *E.g.*, Ex. 1013, Abstract, 2:60-3:27; Ex. 1014, Abstract, 1:36-57; Ex. 1015, 6:4-7, 5:36-68.) The ’543 patent admits this and shows a “classical ANC (adaptive noise cancellation)” device. (Ex. 1001, 16:44-46, Fig. 1B (“Prior Art”); Ex. 1002 ¶32.)

2. Noise Canceling Communications Systems with Microphones Oriented Toward and Away From a Speaker Were Known.

By the mid-1990s, it was widely known that orienting microphones in certain directions improves noise removal in communications devices such as handsets and headsets. (Ex. 1002 ¶33.) For example, Andrea, a patent that issued in 1998, disclosed a telephone handset that implements an “active noise reduction system.” (Ex. 1004, 1:19-22.) The handset, which could be wired or wireless, contains a receiver 42 that includes “first and second microphones 12 and 14.” (*Id.*, 12:31-43.)

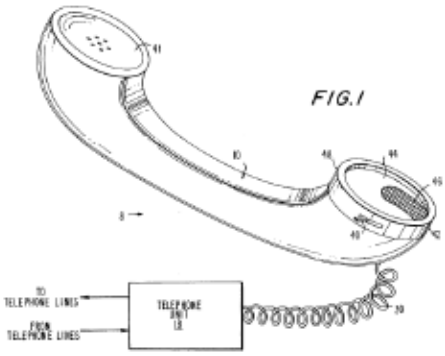

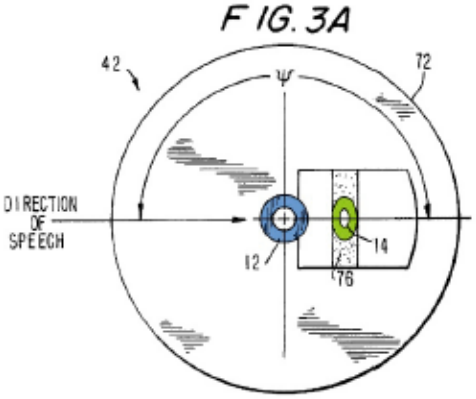

(*Id.*, Figs. 1, 3A.)[2] In this embodiment, the angle (yellow) between the first (blue) and second (green) microphones (12, 14) is "in a range between 30° and 60°":

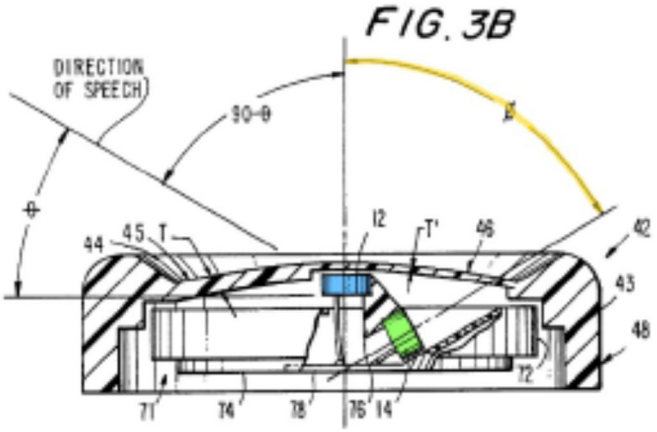

(*Id.*, Figs. 3A-3B, 14:5-32; Ex. 1002 ¶93.)

Andrea also disclosed a headset having a microphone boom 440 that includes first and second microphones 300 and 302. (Ex. 1004, 19:63-64, 20:1-3.)

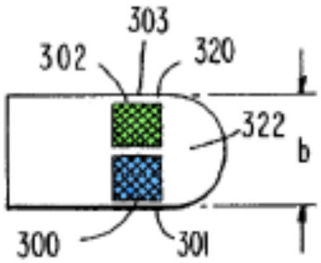

FIG. 9A

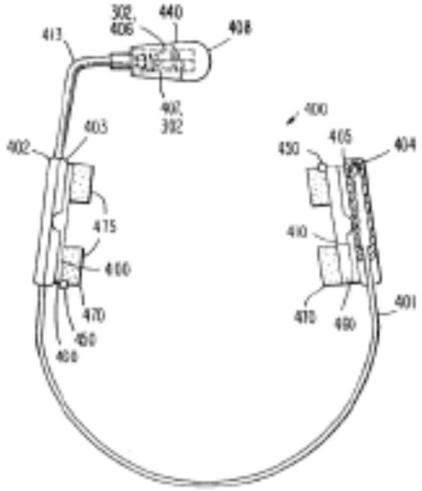

FIG. 9C

[2] Figures have been highlighted for clarity.

(*Id.*, Figs. 9A, 9C.) The microphones were arranged "substantially 180° apart from each other." (*Id.*, 19:11-16, Fig. 9A.) Thus, in each of Andrea's embodiments, one microphone is oriented toward the user's mouth, while the other is oriented away from the user's mouth. (Ex. 1002 ¶94.) Such configurations were well known. (*E.g.*, Ex. 1005; Ex. 1002 ¶¶94, 158.)

Andrea's system subtracted the second microphone's noise signal from the first microphone's signal to output a denoised signal "representing substantially the speech to the telephone unit." (Ex. 1004, 12:46-64.) Andrea thus disclosed in 1998 orienting one microphone toward the speaker's mouth to capture the target signal plus noise, orienting a second microphone away from the speaker's mouth to generate a noise estimate, and subtracting the noise estimate from the target-plus-noise signal to output the target signal with less noise.

3. Noise Canceling Systems Operating in Frequency Sub-bands Were Known.

It was also widely known in the art that denoising could be performed on frequency sub-bands. Published in 1997, Hussain disclosed an adaptive noise canceling system that improved performance in reverberant environments by processing acoustic signals in separate sub-bands before recombining them to produce a denoised signal. (Ex. 1006, 2611-12.) When no voice activity is detected, Hussain's adaptive filter determines a "differential acoustic-path transfer function" for individual sub-bands. (*Id.*, 2612.) Then, when voice is detected, the transfer

function is used "to process the noisy speech signal" and output a denoised speech signal. (*Id.*) The system applies sub-band processing ("SBP") to each sub-band, reconstructs the processed signals, and outputs the denoised processed signal, as shown:

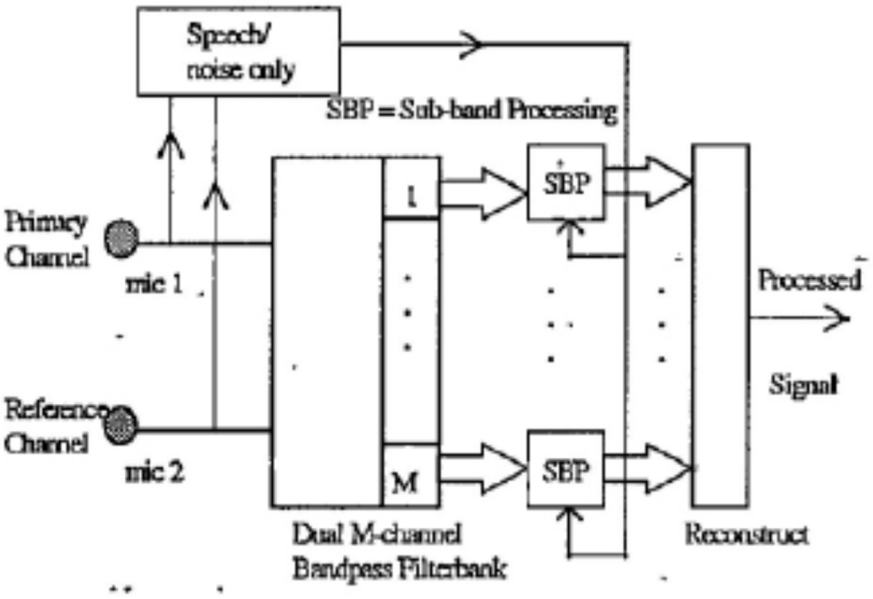

(*Id.*, Fig. 1; Ex. 1002 ¶46.) Many other prior art references similarly described sub-band processing in noise cancellation systems. (Ex. 1015, 5:36-6:7; Ex. 1016, Abstract, Fig. 3; Ex. 1017, 1:46-57; Ex. 1018, 2:15-38; Ex. 1002 ¶34.)

B. Detecting Voicing Activity With Non-Acoustic Sensors Was Known.

Voice activity detectors, including sensors for detecting voice through tissue vibrations, were also known and used in the art well before the '543 patent's priority date. (Ex. 1019, 1; Ex. 1020, 712; Ex. 1021, 373; Ex. 1002 ¶35.) In 1973, Alcivar described a "tissue conduction microphone" that detects speech through "tissue

vibrations due to modulation of the vocal chords." (Ex. 1008, 4:65-5:54, Abstract.) Filed in 1998, Puthuff disclosed using "a motion transducer comprising a vibration sensor, and specifically, in a preferred embodiment, an accelerometer" to detect speech. (Ex. 1007, 5:1-3.) Puthuff explained that devices such as "vibration transducers," "accelerometers [used] to detect bone vibration," and "throat microphones [that] pick[] up vibrations at the talker's throat" had been known for decades. (*Id.*, 3:19-25; Ex. 1002 ¶36.) Indeed, the '543 patent admits that non-acoustic VAD sensors, including accelerometers and skin surface microphones ("SSMs") were "well known and understood." (Ex. 1001, 12:20-31.)

C. Using Non-Acoustic Sensors for Voice Activity Detection in Noise Cancellation Systems Was Known.

By the late 1990s, it was also known to use noise reduction systems that subtract noise from received signals together with non-acoustic VADs. (Ex. 1002 ¶37.) For example, in 1999, a group at Lawrence Livermore National Laboratory ("LLNL") filed a patent application (later issued in 2002) describing exactly this combination. Mr. Burnett, one of the co-inventors of the '543 patent, worked at LLNL and was the first-named inventor on the LLNL patent ("Burnett '919").

Burnett '919 disclosed a "noise canceling microphone system" comprising an EM sensor to "remove[] background acoustic noise from unvoiced and voiced speech." (Ex. 1003, 17:49-52.) The system used two microphones ("user

microphone 1210 and microphone 1220", blue and green) and a voicing sensor (EM sensor 1240, pink) to "determine no-speech time periods." (*Id.*, 17:56-61.)

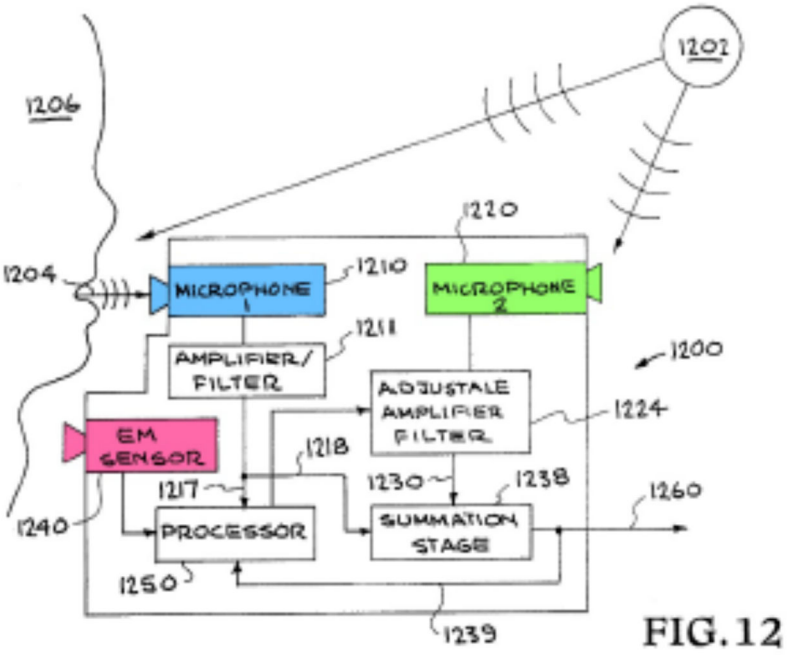

(*Id.*, Fig. 12.)

Based in part on the output signal from EM sensor 1240, processor 1250 outputs a control signal to amplifier and filter circuit 1224 so that "[c]ancellation values determined by circuit 1224 are defined during periods of no-speech, and frozen during periods of speech production." (*Id.*, 17:48-18:17.) By controlling when the amplifier and filter circuit adapts, the noise canceler generates an "amplified and filtered background microphone signal 1230" that estimates the noise portion of the signal received by user microphone 1210. (*Id.*, 17:48-18:17.) Using this noise estimate, the system minimizes noise in the output signal. (*Id.*; Ex. 1002 ¶45.)

Burnett later joined AliphCom, Inc., the original assignee of the ’543 patent. There, he filed patent applications claiming trivial variations of the technology developed at LLNL.

II. THE ’543 PATENT

A. Overview

The ’543 patent relates to systems “for detecting and processing a desired acoustic signal in the presence of acoustic noise.” (Ex. 1001, 1:28-30.) The patent states that prior art systems generally used a “single-microphone Voice Activity Detector (VAD) to determine the background noise characteristics” and describes limitations of these single-microphone VAD systems. (*Id.*, 1:46-49, 1:60-2:2.)

The ’543 patent purports to improve upon the prior art by using a non-acoustic VAD. (*Id.*, 2:7-13.) The patent’s system includes two microphones (103, 104), a noise removal system 105, and a VAD 106:

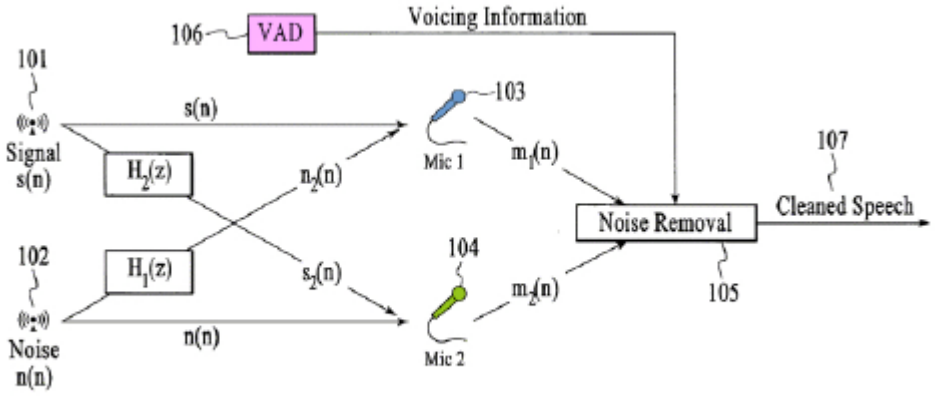

(*Id.*, Fig. 1; *id.*, 5:28-34, 14:40-50.) The microphones receive signals from speech source 101 and noise source 102. (*Id.*) VAD 106 detects and indicates whether speech is occurring. (*Id.*, 4:52-57; Ex. 1002 ¶39.)

The patent explains various known VADs that can be used, including EM sensors (Ex. 1001, 11:51-12:12), accelerometers, SSMs, two-microphone acoustic VADs, and single-microphone VADs (*id.*, 11:40-14:39). A VAD signal is used to "control the method of noise removal." (*Id.*, 4:52-57, 14:51-15:35; Ex. 1002 ¶40.)

The patent also describes using two conventional unidirectional or omnidirectional microphones in various configurations, including one facing toward the speaker and one facing away. (Ex. 1001, 6:44-11:39, Figs. 3A-9C.) These configurations purportedly allow the microphones to be "placed very close together" (*id.*, 6:58-63), although the patent also describes placing the microphones "15 centimeters or more away" from each other (*id.*, 8:13-15). (Ex. 1002 ¶41.)

The '543 patent concludes by describing a noise cancellation system that is "very similar" to prior art systems. (Ex. 1001, 16:44-54, 14:39-19:22.) The patent asserts the disclosed system is different because (a) it uses a VAD to control the noise cancellation system; (b) it processes the signals in "subbands"; and (c) the microphone configurations allow the secondary microphone to capture some speech signal. (*Id.*; *see also id.*, 16:55-17:34.) But using a VAD, sub-band processing, and the claimed microphone configurations were all well known. (Ex. 1002 ¶42.)

B. Prosecution History

The '543's application was filed on March 27, 2003, but the patent did not issue until June 18, 2013. (Ex. 1001.) During prosecution, the Examiner consistently rejected the claims, finding that "it was well known in the art at the time of invention to use glottal electromagnetic sensors and skin microphones to generate voice signals," and that "[i]t would have been obvious to one of ordinary skill in the art at the time of invention to modify the combination of [cited references] to use such sensors." (*E.g.*, Ex. 1022, 102.) The Examiner also found that "a headset having two microphones was well known in the art at the time of invention" and that it "would have been obvious to modify [the cited reference] so that the headset includes the microphones in order to improve voice detection." (*Id.*, 188.)

The Examiner eventually allowed the claims after Applicants amended the independent claims to recite "wherein the voice detection subsystem is configured to receive the voice activity signals using a sensor independent from the microphone array and to output the control signals." (*Id.*, 484-93, 535-41.) But, as shown herein, using an independent sensor to detect voice activity was not new. The Examiner never considered the references in this Petition or any similar references.

III. STATEMENT OF RELIEF REQUESTED

A. Grounds

The Board should cancel the claims under §103 as follows:

Ground	Claims Challenged	References
1	1-2, 5-7	Burnett '919 and Hussain
2	1-2, 5-13, 26	Burnett '919, Hussain, and Andrea
3	14-25	Grounds 1 or 2 References and Sasaki
4	3	Grounds 1 or 2 References and Puthuff
5	4	Grounds 1 or 2 References and Alcivar

B. The References Are Prior Art.

The '543 patent's priority date is no earlier than March 27, 2002. (Ex. 1001.) Thus, the references are prior art under pre-AIA 35 U.S.C. §102(b) because they published more than one year earlier:

(i) Andrea published October 20, 1998 (Ex. 1004);

(ii) Sasaki issued November 28, 1995 (Ex. 1005);

(iii) Hussain published no later than September 25, 1997 (Ex. 1006; Ex. 1023);

(iv) Puthuff published April 13, 2000 (Ex. 1007); and

(v) Alcivar issued July 17, 1973 (Ex. 1008).

Burnett '919 is prior art under at least 35 U.S.C. §102(e) because it was filed November 4, 1999, and issued April 23, 2002. (Ex. 1003.)

C. The References Are Analogous Art.

The references are analogous art because they are from the same field as the '543 patent, e.g., signal capture and processing for speech or audio applications. *Unwired Planet, LLC v. Google Inc.*, 841 F.3d 995, 1000 (Fed. Cir. 2016). They are also pertinent to a problem the inventor was focused on, e.g., noise reduction. (Ex. 1002 ¶20.)

IV. LEVEL OF ORDINARY SKILL

A person of ordinary skill in the art ("POSITA") would have had a minimum of a bachelor's degree in computer engineering, computer science, electrical engineering, mechanical engineering, or a similar field, and approximately three years of industry or academic experience in a field related to acoustics, speech recognition, speech detection, or signal processing. (Ex. 1002 ¶28.) Work experience can substitute for formal education and additional formal education can substitute for work experience. (*Id.*)

V. CLAIM CONSTRUCTION

On February 28, 2023, PO sued Petitioner for infringement of the '543 patent in *Jawbone Innovations, LLC v. LG Electronics Inc.*, 2:23-cv-00078-JRG-RSP (E.D. Tex.). Although the parties may propose constructions for certain terms in the Litigation for purposes of determining infringement, no claim terms require

construction to resolve the obviousness challenges here.[3] *Nidec Motor Corp. v. Zhongshan Broad Ocean Motor Co. Ltd.*, 868 F.3d 1013, 1017 (Fed. Cir. 2017); *Vivid Techs., Inc. v. Am. Sci. & Eng'g, Inc.*, 200 F.3d 795, 803 (Fed. Cir. 1999).

VI. GROUNDS FOR UNPATENTABILITY

A. Ground 1: Obviousness over Burnett '919 and Hussain

Burnett '919 and Hussain render obvious claims 1-2 and 5-7. (Ex. 1002 ¶¶44-91.)

1. Claim 1

a. Preamble

The preamble recites a "communications system," which Burnett '919 discloses because it discloses a system for "public address systems, telephone conference systems, telephone networks" and similar communications systems. (Ex. 1003, 14:47-50, 15:55-59; Ex. 1002 ¶47.)

b. Voice Detection Subsystem

Claim 1 recites "a voice detection subsystem configured to receive voice activity signals that include information associated with human voicing activity, the voice detection subsystem configured to automatically generate control signals using

[3] In the Litigation, the parties may dispute invalidity under 35 U.S.C. §112. For this proceeding, Petitioner assumes the claims are not invalid under §112.

the voice activity signals." Burnett '919 discloses and/or renders obvious this limitation.

Burnett '919 discloses a noise cancelling system that "removes background acoustic noise from unvoiced and voiced speech." (Ex. 1003, 17:49-51.) As Figure 12 shows, the system uses an "EM sensor [1240] to determine no-speech time periods" (e.g., as part of a VAD):

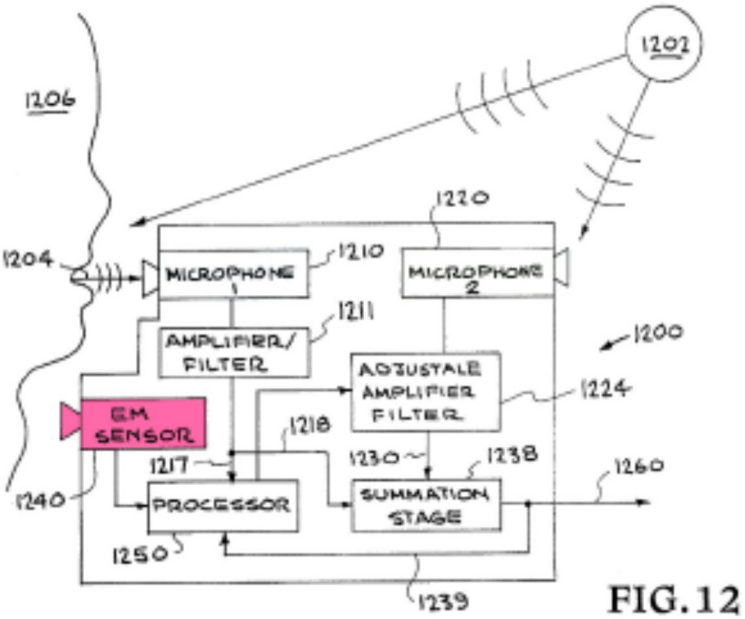

FIG. 12

(*Id.*, 17:56-67, Fig. 12.) The EM sensor 1240 (pink) detects "motions of wall tissues in either a sub-glottal or supra-glottal region … as vocal folds oscillate" during voice production (e.g., voice activity signals that include information associated with human voicing activity). (*Id.*, 2:62-3:9.) Signals received by the EM sensor are used to "describe periods of no speech or of unvoiced speech" and to determine when the

speaker is producing acoustic speech signals. (*Id.*, 3:36-58.) EM sensor 1240 outputs voice activity signals to processor 1250. (*Id.*, Fig. 12; Ex. 1002 ¶49.)

Processor 1250 outputs a signal that controls the operation of amplifier and filter circuit 1224 by notifying the circuit whether voicing activity is occurring or not. (Ex. 1003, 17:56-18:8 (filter adapts "cancellation values … during periods of no-speech" and pauses adaptation "during periods of speech production"), Fig. 12.) The signal output from processor 1250 controls the operation of amplifier and filter circuit 1224 and is therefore a "control signal." (*Id.*, 17:56-18:8; Ex. 1002 ¶50.) Burnett '919 further discloses that the processor outputs the signal automatically. (Ex. 1003, 17:50-56; Ex. 1002 ¶50.) Alternatively, a POSITA would have understood the above disclosure to require that Burnett '919's system automatically generate control signals identifying the periods of no-speech and/or speech production. (Ex. 1003, 18:4-17, Fig. 12; Ex. 1002 ¶50.)

Burnett '919 further discloses that its control signals are generated using the voice activity signals received by the EM sensor. Burnett '919 discloses that periods of speech and non-speech may be identified by a "master speech onset algorithm," which is disclosed in U.S. Patent No. 6,006,175 ("Holzrichter '175"), which Burnett '919 incorporates by reference. (Ex. 1003, 11:65-12:3; *id.*, 1:52-56; Ex. 1009.) Burnett '919, through Holzrichter '175, discloses that the master speech onset algorithm uses, among other inputs, input from "one or more EM sensor modules"

to determine periods of speech and non-speech. (Ex. 1009, 31:51-53; *id.*, 31:33-32:54, Fig. 19.) Thus, Burnett '919's control signals are generated using voice activity signals received by the EM sensor. (Ex. 1002 ¶51.)

Burnett '919 therefore discloses and/or renders obvious this limitation. (*Id.* ¶¶48-52.)

c. Denoising Subsystem

Claim 1 recites "a denoising subsystem coupled to the voice detection subsystem," as well as additional requirements for the denoising system, which are discussed below. Burnett '919 discloses these limitations.

Burnett '919 discloses a denoising subsystem that uses "conventional automatic algorithms … to remove the noise from … speech signals." (Ex. 1003, 12:37-39.) As described below, Burnett '919's denoising subsystem comprises a microphone array that captures acoustic signals and a processor that uses input from a voice detection subsystem (described above, *supra* §VI.A.1.b) to aid in automatically denoising the signals captured by the microphone array. (*Infra* §§VI.A.1.c.i-iv.) Accordingly, Burnett '919 discloses this limitation. (Ex. 1002 ¶¶53-55.)

i. Microphone Array

Claim 1 recites "the denoising subsystem comprising a microphone array including a plurality of microphones …, the microphone array providing acoustic

signals of an environment to components of the denoising subsystem." Burnett '919 discloses and/or renders obvious this limitation.

Burnett '919 discloses a two-microphone array consisting of a first microphone 1210 ("Microphone 1," blue) and a second microphone 1220 ("Microphone 2," green):

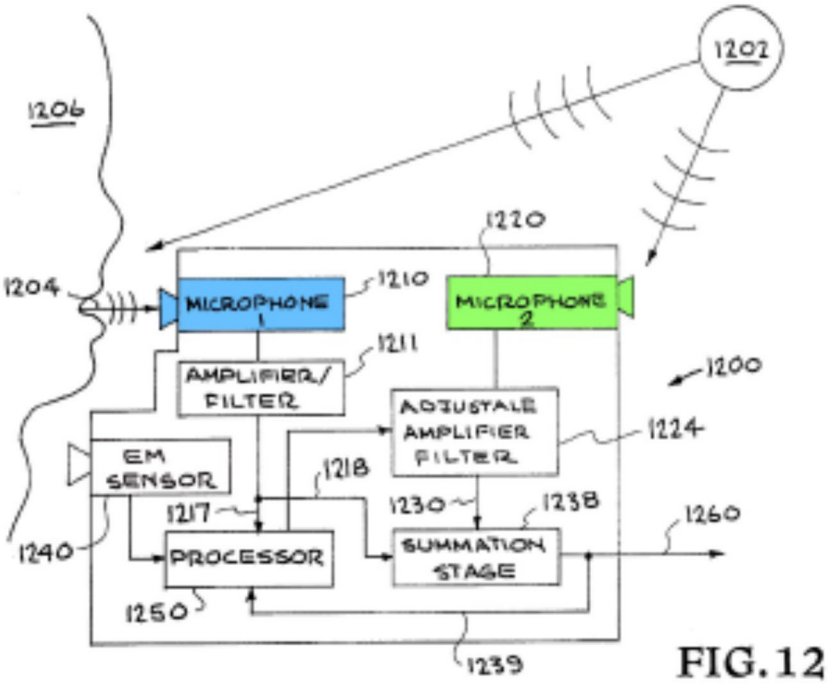

FIG. 12

(Ex. 1003, Fig. 12, 17:58-66.) The signals received by the microphones include acoustic signals of the environment (e.g., background noise 1202) and are provided to components of the denoising subsystem (e.g., adjustable amplifier filter 1224, processor 1250, and summation stage 1239). (*Id.*) Thus, Burnett '919 discloses this limitation. (Ex. 1002 ¶¶56-58.)

ii. First Microphone

Claim 1 further recites "wherein a first microphone of the array is fixed at a first position relative to a mouth, wherein the first position orients a front of the first microphone towards the mouth." Burnett '919 discloses this limitation.

Burnett '919 discloses, in Figure 12, that the first microphone is oriented toward the speaker's mouth:

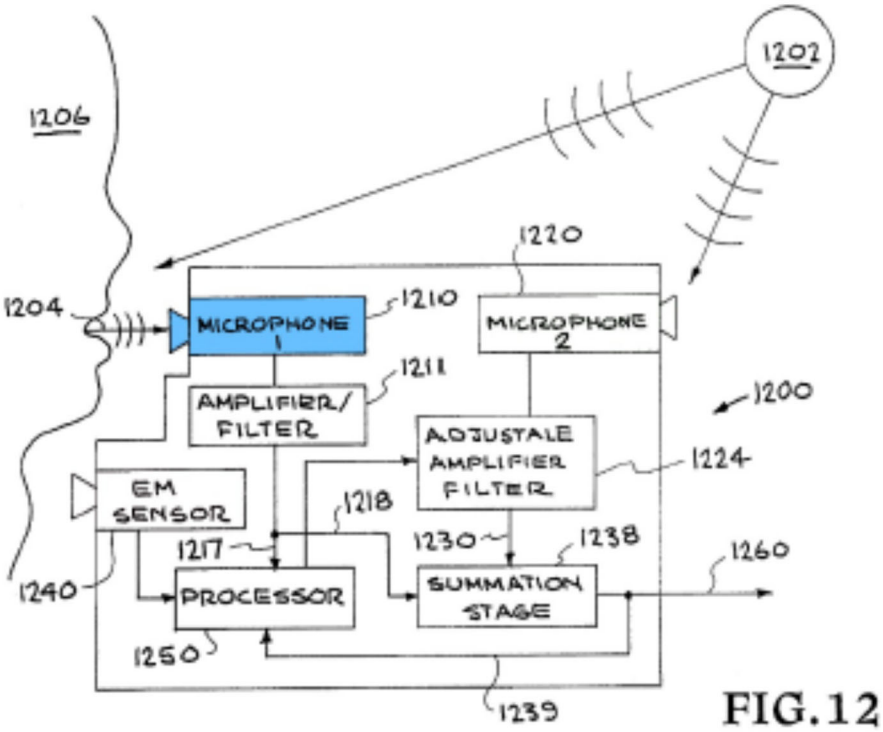

FIG. 12

(Ex. 1003, Fig. 12; Ex. 1002 ¶60.)

Burnett '919 calls this microphone the "user microphone" and states that it receives "primary speech signals." (Ex. 1003, 17:58-61, 18:13-17.) A POSITA would therefore have understood that the first microphone is fixed in a position towards a speaker's mouth. (Ex. 1002 ¶60); *In re Mraz*, 455 F.2d 1069, 1072

(C.C.P.A. 1972) (patent drawings alone may provide invalidating disclosure); *Qualcomm Inc. v. Monterey Research, LLC*, IPR2020-01491, Paper 36 at 30-32 (P.T.A.B. March 4, 2022); *Micron Tech., Inc. v. Lone Star Silicon Innovations, LLC*, IPR2017-01560, Paper 41 at 31-34 (P.T.A.B. Dec. 12, 2018). Alternatively, it would have been obvious to a POSITA to fix the first microphone in that position to ensure a consistent acoustic environment between the speaker's mouth and the microphone. (Ex. 1002 ¶61.) Accordingly, Burnett '919 discloses and/or renders obvious this limitation. (*Id.* ¶¶59-61.)

iii. Second Microphone

Claim 1 further recites "wherein a second microphone of the array is fixed at a second position relative to the mouth, wherein the second position orients a front of the second microphone away from the mouth such that the second position forms and angle relative to the first position, wherein the angle is greater than zero degrees." Burnett '919 discloses this limitation.

Burnett '919 discloses that the second microphone (e.g., "microphone 1220") is oriented away from the speaker's mouth, thus forming an angle relative to the first microphone greater than zero degrees (about 180 degrees as shown):

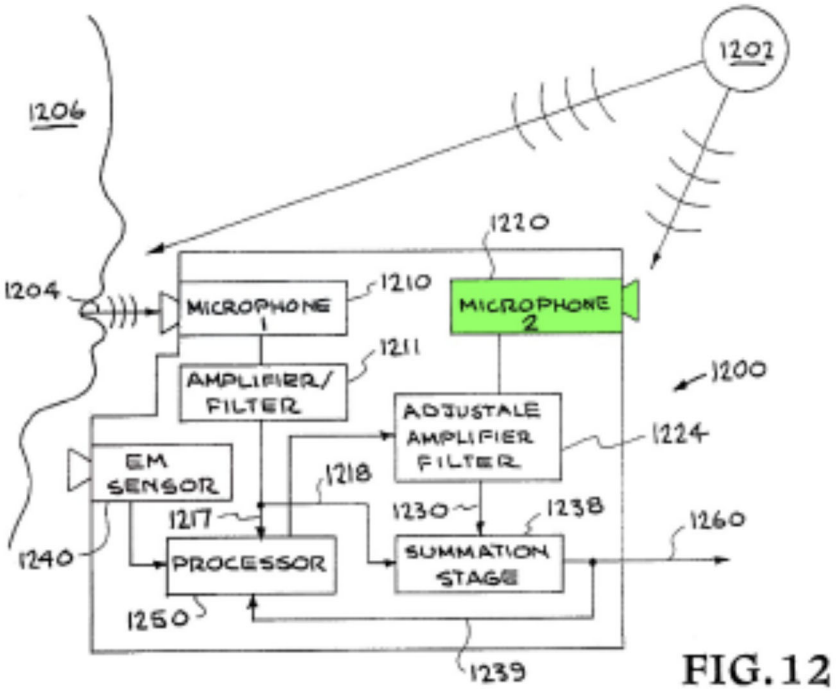

FIG. 12

(Ex. 1003, Fig. 12; Ex. 1002 ¶63.) Burnett '919 discloses that the second microphone is used "to measure background noise" and that if "a substantial amount of speech" is picked up by the second microphone, distortion can occur. (Ex. 1003, 17:58-61, 18:13-17.) A POSITA would have understood from this disclosure that the second microphone is fixed in a position facing away from the speaker's mouth. (Ex. 1002 ¶63.) Alternatively, it would have been obvious to a POSITA to fix the second microphone in that position to ensure a consistent acoustic environment and to prevent the microphone from picking up a "substantial amount of speech." (*Id.*) Accordingly, Burnett '919 discloses and/or renders obvious this limitation. (*Id.* ¶¶62-64.)

iv. Generating Denoised Output[4]

Claim 1 further recites "processing the acoustic signals … to generate denoised acoustic signals, [including] generating a noise waveform estimate associated with noise of the acoustic signals and subtracting the noise waveform estimate from the acoustic signal when the acoustic signal includes speech and noise." Burnett '919 discloses and/or renders obvious this limitation.

Burnett '919 discloses that its system processes acoustic signals to remove background noise from speech. (Ex. 1003, 17:49-53, Fig. 12.) The speech is contained in the acoustic signal 1218, which is received by and output from microphone 1210. (*Id.*, 17:49-18:3, Fig. 12.) Burnett '919 also discloses processing acoustic signals from background microphone 1220. (*Id.*) Thus, Burnett '919's system processes acoustic signals (e.g., signals from microphones 1210 and 1220) to generate denoised acoustic signals (e.g., the output of Burnett '919's system). (Ex. 1002 ¶66.)

Burnett '919's system processes the signals from microphones 1210 and 1220 using adaptively-adjusted amplifier and filter circuit 1224, which produces signal 1230. (Ex. 1003, 17:49-18:17; Ex. 1002 ¶67.) A POSITA would have understood that signal 1230 is a noise waveform estimate associated with noise of the acoustic

[4] This limitation and the next limitation are presented out of order for clarity.

signals. (Ex. 1002 ¶67.) Burnett '919 discloses that, during periods when no speech is occurring, "background (i.e., non-user-generated speech) acoustic signals can be characterized,"[5] which a POSITA would have understood would be conducted by circuit 1224 to produce signal 1230. (Ex. 1003, 12:3-5, Fig. 12 (showing signal 1230 produced by circuit 1224); *id.*, 17:53-56 (system uses "Noise [R]emoval Method 1"), 11:61-12:49 (discussing Noise Removal Method 1); Ex. 1002 ¶67.) Burnett '919 further discloses that background acoustic signal characterization "can include obtaining an average amplitude of a background signal, peak signal energy and/or power of one or more peak noise amplitudes … and their time locations in a time frame." (Ex. 1003, 12:27-32.) A POSITA would have understood that such disclosure describes estimating a noise waveform. (Ex. 1002 ¶67 (characteristics of a waveform include amplitude and peak energy and/or power).) Accordingly, Burnett '919 discloses generating a noise waveform estimate (e.g., background acoustic signal characterization) associated with noise of the acoustic signals (e.g., noise captured by microphones 1210 and 1220). (*Id.*)

Burnett '919 then discloses subtracting the noise estimate from the acoustic signal when the acoustic signal contains speech and noise. Burnett '919 discloses

[5] Burnett '919 interchangeably refers to background signals as "noise." (Ex. 1002 ¶67.)

that the noise estimate 1230 "is set equal and opposite in sign to a speaker's microphone signal 1218," with which it is then summed. (Ex. 1003, 17:66-18:3, Fig. 12.) A POSITA would have understood that this describes subtracting the noise estimate 1230 from the speaker's microphone signal 1218, which is an acoustic signal captured by the microphone 1210. (*Id.*, 17:58-18:3, Fig. 12; Ex. 1002 ¶68.) A POSITA would further have understood that this occurs when the acoustic signal contains speech and noise. (*See* Ex. 1003, 17:49-18:17; Ex. 1002 ¶68.) Thus, Burnett '919 discloses and/or renders obvious this limitation. (Ex. 1002 ¶¶65-69.)

v. Using a Frequency Sub-band Method

Claim 1 further recites "components of the denoising subsystem automatically selecting at least one denoising method appropriate to data of at least one frequency sub-band of the acoustic signals using the control signals and processing the acoustic signals using the selected denoising method to generate denoised acoustic signals." Hussain and Burnett '919 disclose and/or render obvious this limitation.

Hussain discloses an "adaptive noise cancellation scheme" that improves performance in reverberant environments by processing acoustic signals in separate sub-bands to produce a denoised signal. (Ex. 1006, 2611-13, Fig. 1; Ex. 1002 ¶71.) Like Burnett '919, Hussain receives signals at a dual microphone array. (Ex. 1006, 2611-13, Fig. 1.) A filter bank separates the signals into individual sub-bands for processing. (*Id.*)

Hussain then selects the best processing method for each sub-band. (*Id.*, 2612.) For example, for some sub-bands where little noise is present, "the signal in that band need not be modified." (*Id.*) In other sub-bands, an adaptive noise cancellation method is employed. (*Id.*) Hussain discloses that the decision of which method is best for each sub-band is determined, at least in part, by the output of a VAD. (*Id.* (Hussain assumes "an effective voice activity detector (VAD) is available"); *id.* (disclosing a VAD algorithm and its use in "selecting the best SBP [sub-band processing] option"); Ex. 1002 ¶72.)

After processing each sub-band, Hussain's system recombines the processed sub-band signals into a full-band signal and outputs the denoised signal:

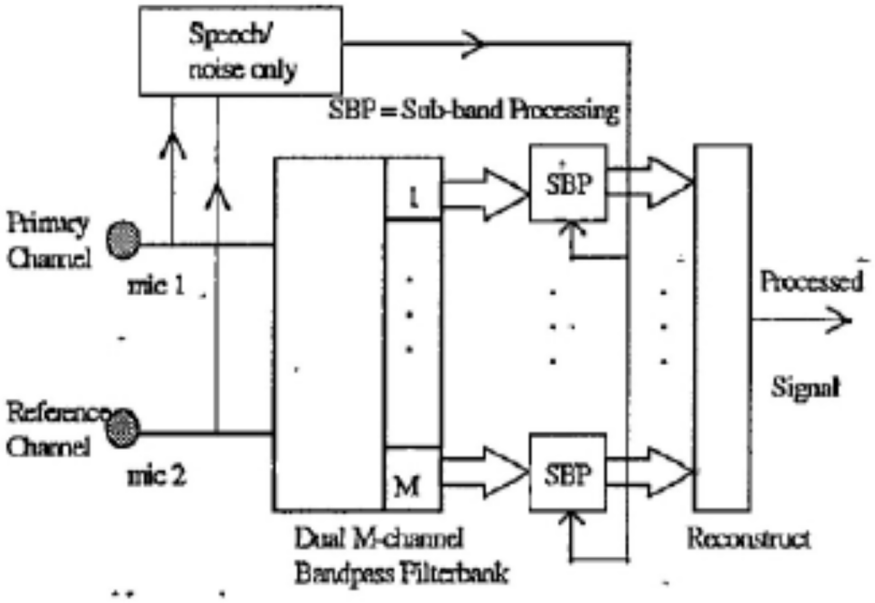

(Ex. 1006, Fig. 1; Ex. 1002 ¶73.) Hussain therefore discloses using control signals (from a VAD) to automatically select at least one denoising method

appropriate to data of at least one frequency sub-band of received acoustic signals, and processing the acoustic signals using the selected denoising method to generate denoised acoustic signals. (*Id.*)

(a) Motivation to Combine

A POSITA would have been motivated to combine Burnett '919 and Hussain's teachings and to incorporate sub-band processing as in Hussain into Burnett '919's denoising system. (*Id.* ¶¶74-78.) For example, a POSITA would have been motivated to: use Burnett '919's microphone array and its VAD (including EM sensor) to create control signals; use Hussain's sub-band processing and selection of best denoising method to process the acoustic signals using the control signals to decide on the best denoising method; and use Burnett '919's adaptive denoising method, along with Hussain's no-processing-necessary method, as options for denoising methods. (*Id.* ¶74.) A POSITA would have been motivated to make this combination for several reasons.

First, Burnett '919 and Hussain address the same problem (removing noise from speech) and address the problem with similar solutions (a voice detection subsystem and adaptive noise removal methods). (Ex. 1003, Abstract, 12:20-26; Ex. 1006, Title, Abstract, 2611-12; Ex. 1002 ¶75.)

Second, Burnett '919 suggests removing echoes, signal reverberations, and other noise and discloses one method of doing so. (*Supra* §VI.A.1.c.iv.) Hussain

describes advantages of using adaptive noise cancellation methods on individual sub-bands rather than full-band processing (e.g., it improves performance in reverberant environments). (Ex. 1006, 2611, Abstract; Ex. 1002 ¶76.) A POSITA would have therefore been motivated to incorporate Hussain's teachings into Burnett '919's system because of the benefits Hussain discloses. (*Id.*)

Third, sub-band processing of acoustic signals has been known for decades. (Ex. 1002 ¶¶77, 34 (citing Exs. 1015-1018).) Thus, this combination represents nothing more than the simple addition of one known element (Hussain's sub-band processing) to another known element (Burnett '919's system) to obtain the predictable results of efficient, effective noise cancellation. (*Id.* ¶77); *KSR Int'l Co. v. Teleflex Inc.*, 550 U.S. 398, 417 (2007). Moreover, the combination represents the use of a known technique (sub-band processing as in Hussain) to improve a similar device and method (Burnett '919's system) in the same way. (*Id.*) The combination also applies a known technique (sub-band processing) to a known device and method (Burnett '919's system) that is ready for improvement and yields predictable results (a noise cancellation system that works effectively and efficiently). (*Id.*)

A POSITA would have had a reasonable expectation of success in combining Burnett '919 and Hussain because they relate to similar systems (adaptive noise removal systems) and because the principle of operating on frequency sub-bands was well known in the art. (*Id.* ¶78.)

(b) Hussain Was Publicly Available.

Hussain was part of published materials from the 5th European Conference on Speech Communication and Technology: Eurospeech '97, held September 22-25, 1997 and attended by around 1,000 participants. (Ex. 1006, i-ii, vi; Ex. 1024 (hard-copies were "printed and available to interested people"); Ex. 1025, 7 (Hussain found at "Volume 5 pages 2611-2614"); Ex. 1026 (order form for proceedings); Ex. 1027, 1, 3, 15; Ex. 1023 ¶¶17, 21, 24-31, Appxs. B, D, G-J.) The conference papers, including Hussain, were distributed to attendees and available outside the conference, as confirmed by records for The Ohio State University and Rutgers University libraries and archived web pages. (Ex. 1023 ¶¶17, 21, 24-31, Appxs. B, D, G-J; Ex. 1024; Ex. 1025; Ex. 1026; Ex. 1027, 1, 3, 15.) Those libraries, both indicating a 1997 publication date, cataloged the conference papers on June 30, 2000, and July 30, 1999, respectively, and they were shelved and made publicly available shortly thereafter. (Ex. 1023 ¶¶14-21, Appxs. A-D.) At least nine libraries cataloged Eurospeech '97, each indicating a 1997 publication date. (*Id.* ¶¶22-23, Appxs. E, F.)

d. Independent VAD Sensor

Claim 1 next recites "wherein the voice detection subsystem is configured to receive the voice activity signals using a sensor independent from the microphone array and to output the control signals generated from the voice activity signals to

the denoising system, the denoising system configured to use the control signals to denoise the acoustic signals from the microphone array." Burnett '919 discloses this limitation.

As discussed, Burnett '919 discloses a voice detection subsystem that receives voice activity signals using a sensor (e.g., EM sensor 1240) independent from the microphone array. (*Supra* §VI.A.1.b.) The subsystem outputs a control signal, generated using the received voice activity signals, to the denoising system. (*Id.*) Burnett '919 and Hussain disclose using the control signals to denoise the acoustic signals from the array. (*Supra* §§VI.A.1.b, VI.A.1.c.iv-v.) Thus, Burnett '919 discloses this limitation. (Ex. 1002 ¶¶79-80.)

Together, Burnett '919 and Hussain render claim 1 obvious. (*Id.* ¶¶47-81.)

2. Claim 2

Claim 2 further recites "wherein the voice detection subsystem further comprises[] at least one glottal electromagnetic micropower sensor (GEMS) including at least one antenna for receiving the voice activity signals[,] and at least one voice activity detector (VAD) algorithm for processing the GEMS voice activity signals and generating the control signals." Burnett '919 discloses this limitation because it discloses that its voice detection subsystem (*supra* §VI.A.1.b) uses a GEMS. (Ex. 1003, 2:62-65 (system uses "EM sensor" that detects glottal tissue

motion); *id.*, 3:7-9 ("terms glottal EM sensor and GEMS (i.e., glottal electromagnetic sensor) are used interchangeably"); Ex. 1002 ¶83.)[6]

Burnett '919 further discloses (and a POSITA would have known) that EM sensors (e.g., GEMS) include one or more antennas. (Ex. 1003, 18:38-41 (discussing "one or more antennas … of the EM sensor"); Ex. 1002 ¶84 (citing Ex. 1009, 7:51-8:49).)

As discussed above, Burnett '919's voice detection subsystem detects voice activity signals (using one or more GEMS) and generates control signals automatically, using the algorithm disclosed in Burnett '919 and incorporated reference Holzrichter '175. (*Supra* §VI.A.1.b; Ex. 1002 ¶85.) Thus, Burnett '919 discloses a VAD algorithm for processing the GEMS voice activity signals and generating the control signals. (*Id.*)

---

[6] In the Litigation, PO asserts that claim 3 (which is similar to claims 2 and 4) specifies the type of sensor recited in claim 1, such that claims 2-4 each only require a single sensor. To the extent PO now argues that claims 2-4 require the sensor of claim 1 and an additional, separate sensor, Burnett '919 (through Holzrichter '175) discloses using two non-acoustic sensors. (Ex. 1009, 31:51-53, Fig. 19; Ex. 1002 ¶83.)

Accordingly, Burnett '919 discloses and/or renders obvious claim 2. (Ex. 1002 ¶¶82-86.)

3. Claim 5

Claim 5 depends from claim 1 and further recites "wherein the voice detection subsystem further comprises at least one manually activated voice activity detector (VAD) for generating the voice activity signals." Burnett '919 discloses and/or renders this limitation obvious.

Burnett '919, through incorporated reference Holzrichter '175, discloses that a voice detection system may be manually activated. Holzrichter '175 discloses that a VAD system may be operated by "the use of a finger or other body part to actuate a button or similar sensor device to start the operation of the EM sensor system." (Ex. 1009, 17:43-48.) Alternatively, such a configuration would have been obvious because on-off buttons or switches were well known. (Ex. 1002 ¶88.) A POSITA would have been motivated to use such a button or switch with Burnett '919's system for at least the reasons disclosed in Holzrichter '175 (e.g., that it would "keep the EM irradiation of the human body low" and "minimize system power usage"). (Ex. 1009, 17:39-43; Ex. 1002 ¶88.) Thus, Burnett '919 discloses and/or renders obvious claim 5. (Ex. 1002 ¶¶87-88.)

4. Claim 6

Claim 6 depends from claim 1 and further recites "including a portable handset that includes the microphones, wherein the portable handset includes at least one of cellular telephones, satellite telephones, portable telephones, wireline telephones, Internet telephones, wireless transceivers, wireless communication radios, personal digital assistants (PDAs), and personal computers (PCs)." Burnett '919 discloses and/or renders obvious this limitation.

Burnett '919 discloses that its system "can be especially useful for telephone and conference calls …." (Ex. 1003, 15:55-56.) U.S. Patent No. 5,729,694 ("Holzrichter '694"), which Burnett '919 explicitly incorporates by reference, discloses "devices [that] can be used … for a variety of user chosen speech related applications" including a "[t]elephone receiver/transmitter unit with EM sensors." (Ex. 1003, 1:24-32; Ex. 1010, 11:17-32.) Thus, a POSITA would have understood that Burnett '919's system, including the microphones, may be in a portable handset (e.g., cellular, satellite, portable, or wireline telephones). (Ex. 1002 ¶90.) Alternatively, it would have been obvious to include Burnett '919's system, including the microphones, in such a portable handset because such devices were commonplace and known to be used in noisy environments where noise cancellation systems like Burnett '919's would be advantageous. (*Id.*) Thus, Burnett '919 discloses and/or renders obvious claim 6. (*Id.* ¶¶89-90.)

5. Claim 7

Claim 7 depends from claim 6 and further recites "wherein the portable handset includes at least one of the voice detection subsystem and the denoising subsystem." As discussed above, Burnett '919 discloses and/or suggests that its system (including the voice detection subsystem and denoising subsystem) could be included in a portable handset. (*Supra* §VI.A.4; Ex. 1002 ¶91.)

B. Ground 2: Obviousness over Burnett '919, Hussain, and Andrea

Even if Burnett '919 and Hussain did not render obvious claims 1-2 and 5-7, those claims would have been obvious in further view of Andrea. Andrea also discloses the additional limitations of dependent claims 8-13 and 26. Accordingly, claims 1-2, 5-13, and 26 would have been obvious in view of Burnett '919, Hussain, and Andrea. (Ex. 1002 ¶¶92-155.) Petitioner incorporates its discussion of Burnett '919 and Hussain and how they disclose or render obvious each limitation from Ground 1. To avoid repetition, Petitioner addresses below only the claims/limitations for which Andrea is relevant.

1. Claim 1

a. Denoising Subsystem

i. Microphone Array

This limitation is disclosed or rendered obvious by Burnett '919. (*Supra* §VI.A.1.c.i.) Andrea also discloses this limitation because it discloses a two-

microphone array that includes a first microphone 12 and a second microphone 14. (Ex. 1004, 12:39-60, Figs. 2, 3A-3B, 9A-9B.) Andrea's array receives acoustic signals from the environment (*id.*, 12:53-57) and provides the acoustic signals to a denoising system (*id.*, 12:53-66 (acoustic signals provided to system that removes noise and outputs signal that is "substantially the speech")). Accordingly, Andrea discloses this limitation. (Ex. 1002 ¶¶99-100.)

ii. First Microphone

Andrea discloses the limitation: "wherein a first microphone of the array is fixed at a first position relative to a mouth, wherein the first position orients a front of the first microphone towards the mouth."

Andrea's Figure 1 discloses a microphone array in a handset:

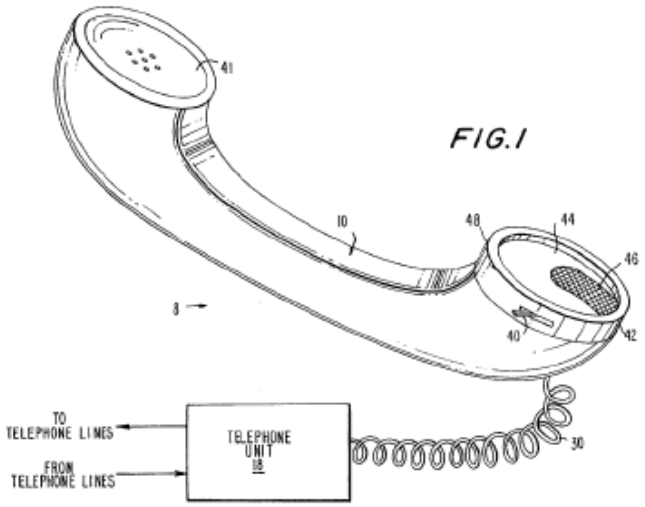

(Ex. 1004, Fig. 1, 12:31-43.) The first microphone 12 is "positioned relatively close to the underside of the [receiver] portion 46" so that "the speech travels a relatively

short distance from an operator, who is speaking into the receiver portion 42" and includes a "receiving or 'sensitive' surface" oriented towards the direction of speech (the user's mouth) to receive "both the speech from the operator and the background acoustic noise[.]" (*Id.*, 13:65-14:29.) Figures 3A and 3B show the orientation of the first microphone 12:

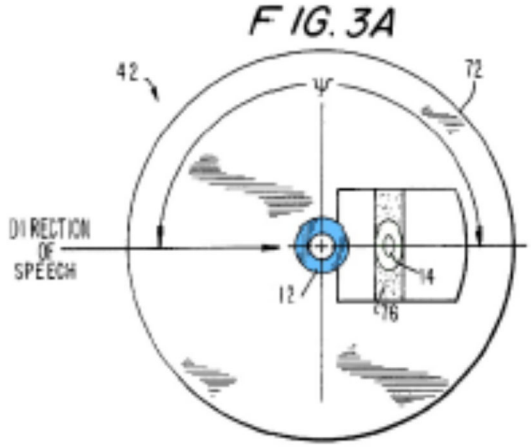

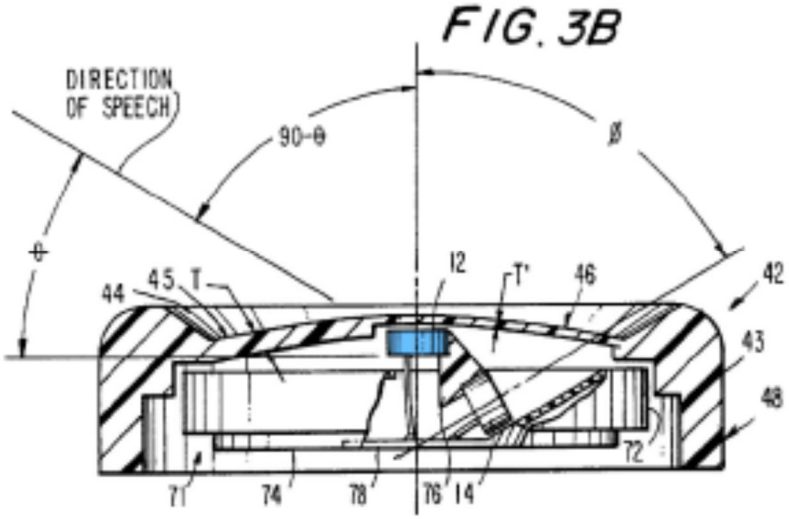

(*Id.*, Figs. 3A-3B; Ex. 1002 ¶102.)

Andrea also discloses that the first microphone 12 is in a fixed position in the handset. (Ex. 1004, 13:65-14:29, Figs. 3A-3B; Ex. 1002 ¶103.) A POSITA would

have understood that this microphone's position is fixed relative to the operator's mouth because the receiver would be held at a fixed position while in use. (Ex. 1002 ¶103.)

In another embodiment, Andrea discloses a headset containing "a microphone boom 320 having a first microphone 300 and a second microphone 302" that are in fixed positions within the boom. (Ex. 1004, 19:9-26, Fig. 9A.)

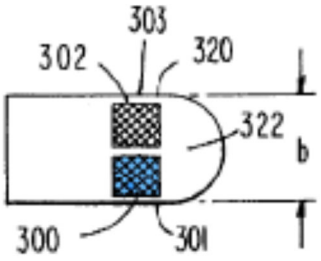

FIG. 9A

(*Id.*, Fig. 9A.) The first microphone (blue) receives primarily speech from a user while the second microphone receives "primarily only the background noise." (*Id.*, 19:26-45.) A POSITA would have understood that the first microphone is fixed in the direction of the speaker's mouth. (Ex. 1002 ¶104.) Accordingly, Andrea discloses this limitation. (*Id.* ¶¶101-04.)

iii. Second Microphone

Andrea also discloses the limitation: "wherein a second microphone of the array is fixed at a second position relative to the mouth, wherein the second position orients a front of the second microphone away from the mouth such that the second

position forms and angle relative to the first position, wherein the angle is greater than zero degrees."

In its handset embodiment, Andrea discloses a second microphone 14 (green):

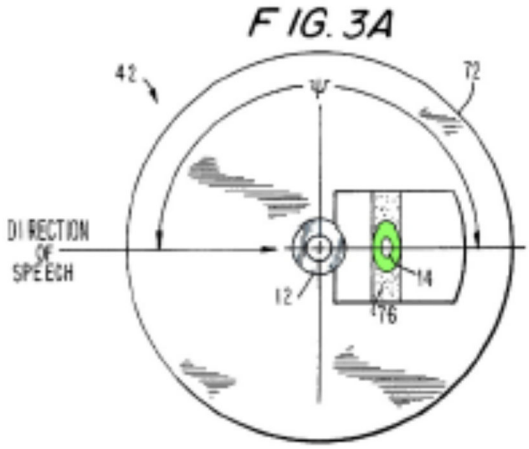

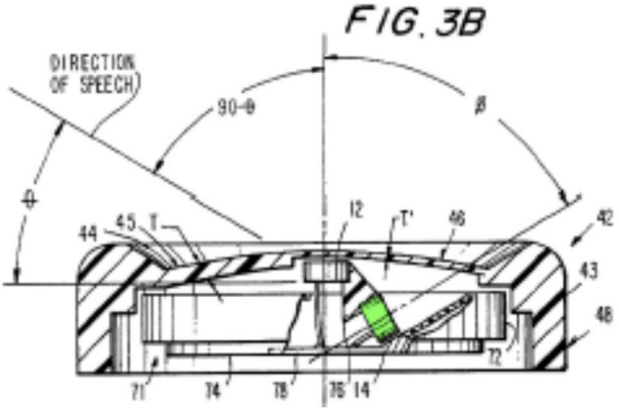

(Ex. 1004, Figs. 3A-3B, 13:65-14:27; Ex. 1002 ¶106.)

The front of the second microphone is oriented away from the speaker's mouth with a relative angle ϕ to the first microphone "which preferably has a value in a range between 30° and 60°" although "the first and second microphones … operate satisfactorily even if arranged so as to have an angle ϕ which lies outside this range." (Ex. 1004, 14:5-32, Figs. 3A-3B.) A POSITA would have therefore

understood that the second microphone is fixed in a direction away from the speaker's mouth, with a relative angle to the first microphone in the range of 30°-60° (e.g., greater than 0°). (Ex. 1002 ¶107.)

In Andrea's headset embodiment, the second microphone 302 (green) is oriented "substantially 180°" away from the first microphone 300:

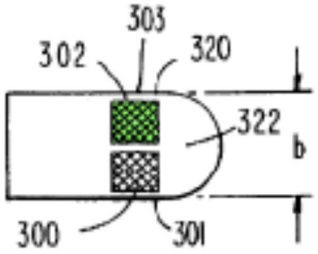

FIG. 9A

(Ex. 1004, Fig. 9A, 19:35-41.) Since the first microphone is fixed toward the speaker's mouth (*supra* §VI.A.1.c.ii), the second microphone is fixed away from the speaker's mouth, with a relative angle to the first microphone of 180° (e.g., greater than 0°). (Ex. 1002 ¶108.)

Accordingly, Andrea discloses this limitation. (*Id.* ¶¶105-09.)

b. Motivation to Combine

A POSITA would have been motivated to combine the teachings of Burnett '919 (with sub-band processing as taught by Hussain) and Andrea, and to use Burnett's noise cancellation system with the microphone configurations taught by Andrea, for several reasons. (*Id.* ¶¶113-18.)

First, Andrea and Burnett '919 address the same problem—removing noise from speech in communications systems such as telephone systems. (Ex. 1003, 15:55-57, 17:48-53; Ex. 1004, Title, Abstract, 1:32-39, Fig. 1; Ex. 1002 ¶114.)

Second, Burnett '919 suggests the combination. Burnett '919's figures disclose orienting microphones away from each other, with the primary microphone oriented towards the speech source, but Burnett '919 does not limit its disclosure to any exact position or application. (Ex. 1003, Fig. 12; Ex. 1002 ¶115.) Burnett '919 and its incorporated Holzrichter references disclose the use of Burnett '919's system with a telephone (*supra* §VI.A.4), but do not disclose any optimal orientation for the microphones in such a system. A POSITA would have been motivated to look to other references, such as Andrea, to understand the appropriate orientation for microphones when used in such an application (e.g., phone handsets and headsets). Andrea discloses the claimed configuration and explains its benefits in headsets and handsets. Thus, a POSITA would have been motivated to use Andrea's microphone configurations with Burnett '919's noise canceling system, particularly when interested in the types of devices Andrea discloses (e.g., telephones, headsets). (Ex. 1002 ¶115.)

Third, Andrea discloses the importance of positioning microphones so that they are phased properly to avoid canceling out speech. (Ex. 1004, 7:30-35.) Thus,

a POSITA thus would have been motivated to configure Burnett '919's microphones as Andrea teaches to optimize performance. (Ex. 1002 ¶116.)

Fourth, various configurations of microphones in arrays have been known for decades. (*Id.* ¶117.) Thus, this combination represents nothing more than the simple addition of one known element (either of Andrea's microphone array configurations) to another known element (Burnett '919's noise cancellation system having two microphones) to obtain the predictable results of inexpensive, effective denoising of speech signals. (*Id.*); *KSR*, 550 U.S. at 417. Moreover, the combination represents using a known technique (microphones configured as in Andrea) to improve a similar device and method (Burnett '919's noise cancellation system) in the same way. (*Id.*) The combination also applies a known technique (using microphones configured as in Andrea) to a known device and method (Burnett '919's system) that is ready for improvement and yields predictable results (a noise cancellation system that works inexpensively and efficiently). (*Id.*)

Fifth, Andrea discloses that its arrays "may be used with processing devices operating in accordance with predetermined processing algorithms …." (Ex. 1004, 35:26-28.) Thus, a POSITA would have been motivated to combine Andrea's array configurations with Burnett '919's system, which is a processing device operating in accordance with predetermined processing algorithms. (Ex. 1002 ¶118.) Furthermore, as discussed, Burnett '919's disclosure is not limited to a particular

microphone configuration. (*Id.*) Accordingly, a POSITA would have had a reasonable expectation of success in using Andrea's microphone configurations with Burnett '919's system. (*Id.*)

2. Claim 6

Claim 6 recites "a portable handset that includes the microphones," where the portable handset is a cellular telephone, portable telephone, wireline telephone, etc. Burnett '919 and Andrea disclose and/or render obvious this limitation.

As discussed, Burnett '919 (and its incorporated Holzrichter references) discloses using its system with a telephone handset. (*Supra* §VI.A.4.) Similarly, Andrea discloses "a telephone 8 which utilizes a noise reduction apparatus." (Ex. 1004, 12:31-41.) Andrea's telephone includes a portable handset that includes the microphones:

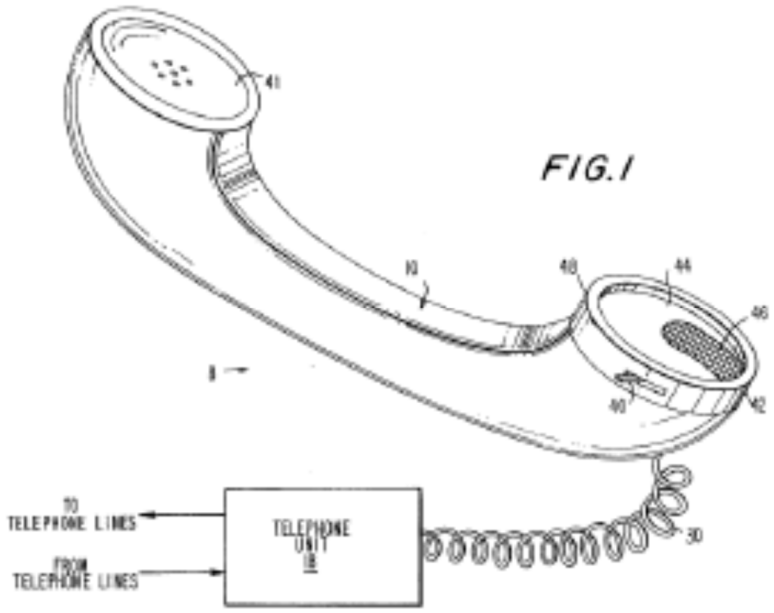

(Ex. 1004, Fig. 1, 12:31-43, Figs. 3A-3B.) Thus, the references disclose and/or render obvious implementing Burnett '919's system (with microphones configured as in Andrea) in a telephone handset. (Ex. 1002 ¶122.)

The Burnett '919-Andrea combination would have been obvious for the reasons set forth above. (*Supra* §VI.B.1.b.) Moreover, implementing Burnett '919's EM sensor-based system, with Andrea's microphone configuration, in a telephone handset would have been obvious because it would facilitate easy telephone and conference calls and improve the phone's performance. (Ex. 1002 ¶123.) Furthermore, a POSITA would have understood that Burnett '919's system and Andrea's microphone configuration were designed to be used with telephone handsets and thus would have reasonably expected success. (*Id.* ¶124; *see, e.g.*, Ex. 1009, 8:50-60 (disclosing "a telephone receiver with modification for under chin EM sensor modules"); Ex. 1010, 11:17-32; Ex. 1004, 12:31-43, Figs. 3A-3B.)

Additionally, telephone handsets were well known. (Ex. 1002 ¶125.) Thus, the combination represents the use of a known technique (telephone handset with microphones oriented as in Andrea) to improve a similar device and method (Burnett '919's noise cancellation system) in the same way. (*Id.*); *KSR*, 550 U.S. at 417. The combination also applies a known technique (telephone handset with microphones oriented as in Andrea) to a known device and method (Burnett '919's system) that

is ready for improvement and yields predictable results (a handset-based noise cancellation system). (*Id.*)

Thus, Burnett '919, Hussain, and Andrea disclose and/or render obvious claim 6. (Ex. 1002 ¶¶121-26.)

3. Claim 7

Claim 7 depends from claim 6 and further recites "wherein the portable handset includes at least one of the voice detection subsystem and the denoising subsystem." As discussed, a POSITA would have been motivated to implement Burnett '919's system, including Andrea's microphone configuration, in a portable handset. (*Supra* §VI.B.2.) Such a portable handset would thus include Burnett '919's system, which includes a voice detection subsystem and a denoising subsystem. (*Supra* §VI.A.1.b-c; Ex. 1002 ¶128.) Thus, Burnett '919, Hussain, and Andrea disclose and/or render obvious claim 7. (Ex. 1002 ¶¶127-28.)

4. Claim 8

Claim 8 depends from claim 1 and recites "further including a portable headset that includes the microphones along with at least one speaker device." Andrea discloses and/or renders obvious this limitation.

Andrea discloses a portable headset that includes "microphone boom 440 [that] includes first and second microphones 300 and 302" and "output transducer 460" (e.g., a speaker device). (Ex. 1004, 19:63-20:11.)

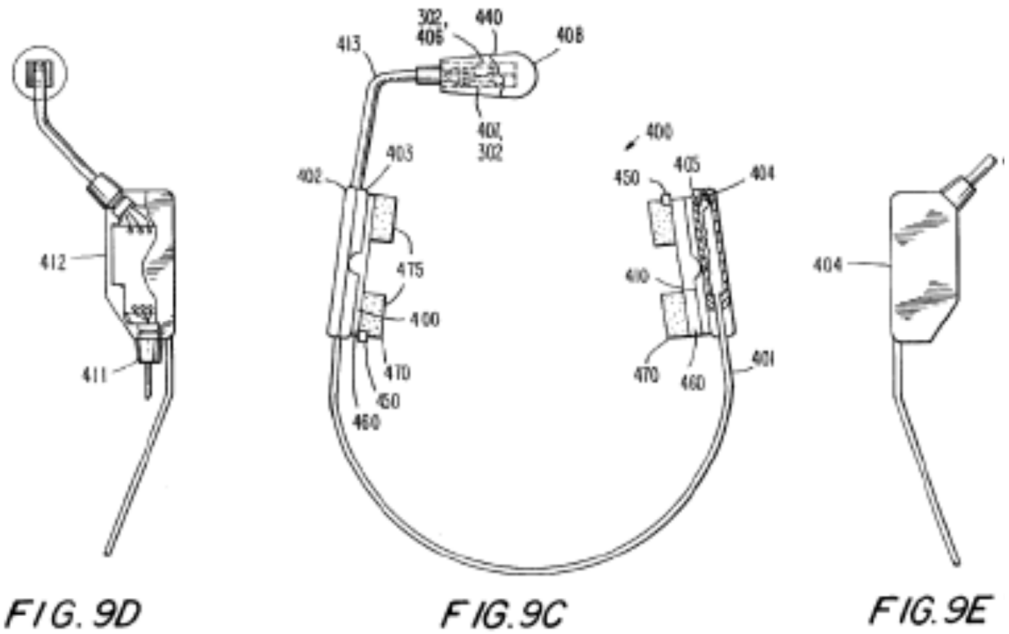

(*Id.*, Figs. 9C-9E; Ex. 1002 ¶130.)

A POSITA would have been motivated to combine the teachings of Andrea and Burnett '919, and implement Burnett '919's system in a system that includes a headset (with microphones configured as in Andrea) for several reasons. As discussed above, Burnett '919 (and its incorporated Holzrichter references) discloses using its system with a telephone. (*Supra* §VI.A.4.) A POSITA would have understood that implementing Burnett '919's EM sensor-based system in a system that includes a headset with microphones and a speaker configured as in Andrea would facilitate telephone and conference calls and would improve the performance of Burnett '919's system in that context. (Ex. 1002 ¶131.) Furthermore, a POSITA would have understood that headsets were common, well-known ways of conducting

telephone and conference calls, and would have reasonably expected success in using a headset with Burnett '919's system for this reason. (*Id.*)

Moreover, portable headsets have been known for decades. (*Id.* ¶132.) Thus, this combination represents the simple addition of one known element (headset with microphones/speaker configured as in Andrea) to another known element (Burnett '919's noise cancellation system) to obtain the predictable results of a noise cancelling communication system that includes a headset. (*Id.*); *KSR*, 550 U.S. at 417. Moreover, the combination represents using a known technique (headset as in Andrea) to improve a similar device and method (Burnett '919's communication system) in the same way. (*Id.*) The combination also applies a known technique (headset) to a known device and method (Burnett '919's system) that is ready for improvement and yields predictable results (a noise cancelling system including a headset). (*Id.*)

Thus, Burnett '919, Hussain, and Andrea disclose and/or render obvious claim 8. (*Id.* ¶¶129-33.)

5. Claim 9

Claim 9 depends from claim 8 and further recites "wherein the portable headset couples to at least one communication device selected from among cellular telephones, satellite telephones, portable telephones, wireline telephones, Internet telephones, … and personal computers (PCs)."

Burnett '919 discloses and/or renders obvious this limitation because Burnett '919's system is designed to connect to a telephone. For example, Holzrichter '694, which Burnett '919 explicitly incorporates by reference, discloses a "[t]elephone receiver/transmitter unit with EM sensors." (Ex. 1010, 11:17-32; Ex. 1002 ¶134.)

Alternatively, this limitation was obvious over Andrea because Andrea discloses a portable headset, discussed above, that "can interface with computers, telephones or other equipment …." (*Supra* §VI.B.4; Ex. 1004, 26:2-10; Ex. 1002 ¶135.) For example, Andrea discloses a headset including a "cable assembly 411 for supplying signals to and from outside or host equipment[.]" (Ex. 1004, 20:42-48, Fig. 9D.) The cable assembly is "connected to 3 meter cable." (*Id.*, 26:15-16)

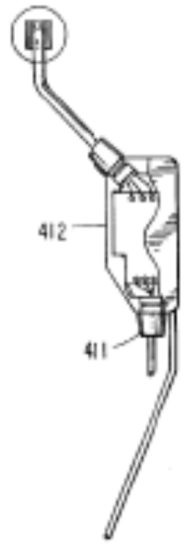

FIG. 9D

(*Id.*, Fig .9D.) A POSITA would have understood that the cable assembly and/or cable constitutes a wired coupling between Andrea's headset and another device such as a computer or telephone. (Ex. 1002 ¶135.)

A POSITA would have understood in view of this disclosure that a system that includes a portable headset and implements Burnett '919's system would couple to a phone or computer as recited in claim 9. (*Id.* ¶136.) Thus, Burnett '919, Hussain, and Andrea disclose and/or render obvious claim 9. (*Id.* ¶¶134-36.)

6. Claim 10

Claim 10 depends from claim 9 and further recites "wherein the portable headset couples to the communication device using at least one of wireless couplings, wired couplings, and combination wireless and wired couplings." Andrea discloses and/or renders obvious this limitation. (*Supra* §VI.B.5; Ex. 1002 ¶137.)

Furthermore, this limitation would have been obvious based on a POSITA's knowledge. Given a headset that connects to a communication device, a POSITA would have had only three choices: connecting via wireless coupling, wired coupling, or a combination of wired/wireless couplings. (Ex. 1002 ¶138.) Thus, the limitation represents a choice from a small finite number of identified, predictable solutions, each of which was common and therefore obvious to try. (*Id.*); *KSR*, 550 U.S. at 421.

Thus, Burnett '919, Hussain, and Andrea disclose and/or render obvious claim 10. (Ex. 1002 ¶¶137-39.)

7. Claim 11

Claim 11 depends from claim 9 and further recites "wherein the communication device includes at least one of the voice detection subsystem and the denoising subsystem." Burnett '919 and Andrea disclose and/or render obvious this limitation. A POSITA would have understood that, when implementing Burnett '919's system in a system that includes a portable headset as discussed for claim 8 (*supra* §VI.B.4), one option would be to connect the headset (comprising the microphones) to a device (e.g., phone) containing the voice detection and/or denoising subsystems. (Ex. 1002 ¶141.) A POSITA would have been motivated to structure the system this way at least because it would allow for Burnett '919's system to operate as designed in conjunction with a lightweight, low-cost headset of the type disclosed in Andrea, which was a popular and common way of conducting telephone calls. (*Id.*)

Furthermore, this limitation would have been obvious because, when implementing Burnett '919 in a system comprising a headset, a POSITA would have had only two choices for locating the subsystems: either in the headset or in the communication device. (*Id.*) Thus, the limitation represents a choice from a small

finite number of identified, predictable solutions, each of which was known and obvious to try. (*Id.*); *KSR*, 550 U.S. at 421.

A POSITA would have reasonably expected success at least because Burnett '919 discloses that its sensors may be located remote from the rest of the system and, e.g., connected wirelessly. (*Infra* §VI.B.9.) Thus, Burnett '919, Hussain, and Andrea disclose and/or render obvious claim 11. (Ex. 1002 ¶¶140-41.)

8. Claim 12

Claim 12 depends from claim 8 and further recites "wherein the portable headset includes at least one of the voice detection subsystem and the denoising subsystem." Burnett '919 and Andrea disclose and/or render obvious this limitation.

Andrea teaches or suggests this limitation because it discloses that a portable headset may include at least a denoising system, including two microphones and circuitry which is used to remove noise from the acoustic signals. (Ex. 1004, 19:54-20:47 (headset includes microphones and "circuitry utilized in processing the acoustic signals"), 22:41-52 (noise cancellation circuitry "may be installed within the headset assembly 400"); Ex. 1002 ¶143.) Thus, a POSITA would have been motivated to implement at least Burnett '919's denoising subsystem in a headset. (Ex. 1002 ¶143.)

Moreover, a POSITA would have understood that, when implementing Burnett '919 in a system that includes a portable headset (*supra* §VI.B.4), one option

would be to implement Burnett '919's entire system (e.g., including the voice detection and/or denoising subsystems) in the headset. (Ex. 1002 ¶143.) A POSITA would have been motivated to do so because it would allow the system to be self-contained and connect to many different communication devices, which would not require special hardware to implement parts of Burnett '919's system. (*Id.*)

Furthermore, when implementing Burnett '919 in a system comprising a headset connected to a communication device, a POSITA would have had only two choices for locations for the subsystems: either in the headset or in the communication device. (*Id.* ¶144.) Thus, the limitation represents a choice from a small finite number of identified, predictable solutions, each of which was known and obvious to try. (*Id.*); *KSR*, 550 U.S. at 421.

A POSITA would have reasonably expected success because, as discussed above, Andrea discloses a portable headset including a denoising system. (Ex. 1004, 19:54-20:47, 22:41-52; Ex. 1002 ¶144.)

Thus, Burnett '919, Hussain, and Andrea disclose and/or render obvious claim 12. (Ex. 1002 ¶¶142-44.)

9. Claim 13

Claim 13 depends from claim 8 and further recites "wherein the portable headset is a portable communication device selected from among cellular telephones, satellite telephones, portable telephones, wireline telephones, Internet

telephones, wireless transceivers, wireless communication radios, personal digital assistants (PDAs), and personal computers (PCs)." Burnett '919 and Andrea disclose and/or render obvious this limitation.

Andrea's portable headset "can interface with computers, telephones or other equipment," which a POSITA would have understood describes coupling a portable headset with, for example, a device containing one or more of Burnett '919's subsystems. (Ex. 1004, 26:7-13; Ex. 1002 ¶146.) Burnett '919, through incorporated reference Holzrichter '175, discloses that its system may connect with sensors "by a wireless (RF or optical) link[.]" (Ex. 1009, 18:49-67.) Furthermore, "acoustic signals can be outputed on wireless or cable links[.]" (*Id.*) Accordingly, a POSITA would have understood from Burnett '919's disclosure that, when implementing Burnett '919's system with a portable headset, the coupling between the headset (which may include the microphones and EM sensor) and the communication device (which may include one or more of Burnett '919's subsystems) could be accomplished wirelessly. (Ex. 1002 ¶147.) A POSITA would have been motivated to use a wireless connection at least because it would eliminate the limiting wired connection between the two components and allow for increased convenience and freedom for a user. (*Id.*) Accomplishing the coupling between the portable headset and Burnett '919's subsystem(s) wirelessly means that the portable headset is at least a wireless transceiver or a wireless communication radio. (*Id.*)

Thus, Burnett '919, Hussain, and Andrea disclose and/or render obvious claim 13. (*Id.* ¶¶145-48.)

10. Claim 26

Independent claim 26 recites similar limitations to claims 1, 8, and 9. Claim 26 thus would have been obvious for the same reasons discussed above. (*Supra* §§VI.A.1, VI.B.1, VI.B.4-5; Ex. 1002 ¶¶149-55.)

C. Ground 3: Obviousness over Grounds 1 or 2 References and Sasaki

Claims 14-25 depend, directly or indirectly, from claim 1. As discussed above, the limitations of claim 1 are disclosed by the references in Grounds 1 and 2. (*Supra* §§VI.A-B.) Sasaki, Burnett '919, and/or Andrea disclose the additional limitations of claims 14-25. Accordingly, claims 14-25 would have been obvious in view of the Grounds 1 or 2 references and Sasaki. (Ex. 1002 ¶¶156-85.)

1. Claim 14

Claim 14 depends from claim 1 and recites "wherein the first microphone is a unidirectional microphone and the second microphone is a unidirectional microphone." Sasaki discloses and/or renders obvious this limitation.

Sasaki discloses a system with a microphone array in which "main input microphone 11 is unidirectional and placed with its most sensible side in the front direction" while "reference input microphone [21] is also unidirectional and is

placed with its most sensible side in the rear direction[.]" (Ex. 1005, 6:6-20.) Figure 6 shows the microphones' sensitivity patterns:

FIG. 6

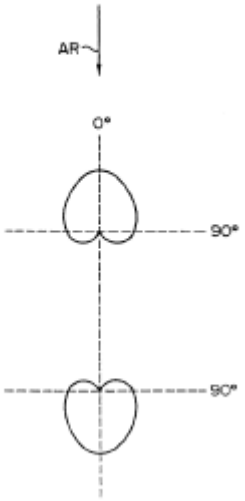

(*Id.*, Fig. 6.) Thus, Sasaki discloses first and second unidirectional microphones. (Ex. 1002 ¶158.)

A POSITA would have been motivated to use Sasaki's unidirectional microphones with Burnett '919 (Ground 1) or with the combination of Burnett '919 and Andrea (Ground 2), for several reasons. (*Id.* ¶¶159-63.)

First, all three references address the same problem—removing noise from speech. (Ex. 1003, 15:55-57, 17:48-53; Ex. 1004, Title, Abstract, 1:32-39, Fig. 1; Ex. 1005, 3:36-54 (describing an "adaptive noise reduction system"), 4:17-28; Ex. 1002 ¶160.)

Second, Burnett '919 uses two microphones, but explains that distortion may occur if "a substantial amount of speech enters microphone 1220[.]" (Ex. 1003, 17:59-60, 18:4-17.) Thus, a POSITA would have been motivated to look to Sasaki's teachings regarding unidirectional microphones so that Burnett '919's microphone 1220 receives less speech signal, reducing distortion. (Ex. 1002 ¶161.) This is particularly important when the microphones are arranged as disclosed in Andrea (*supra* §§VI.B.1.a.i-iii) because the microphones are close together, causing a higher incidence of speech at the second microphone. (Ex. 1002 ¶161.) Furthermore, using a unidirectional microphone as Burnett '919's user microphone 1210, as Sasaki teaches, allows user microphone 1210 to pick up less noise in the first place. (Ex. 1005, 6:21-28 (a unidirectional "main input microphone 11 itself contributes to noise reduction to some extent"); Ex. 1002 ¶161.)

Third, unidirectional microphones were well known and both Burnett '919 and Sasaki disclose a primary microphone for detecting a desired signal and a reference microphone for detecting primarily noise. (Ex. 1003, 18:4-17; Ex. 1005, Abstract, 6:6-20; Ex. 1002 ¶162.) Thus, this combination represents the simple addition of one known element (unidirectional microphones as in Sasaki) to another known element (Burnett '919's microphone array) to obtain predictable results (improved speech detection). (Ex. 1002 ¶162); *KSR*, 550 U.S. at 417. Moreover, the combination represents using a known technique (unidirectional microphones as in

Sasaki) to improve a similar device and method (Burnett '919's) in the same way. (*Id.*) The combination also applies a known technique (using unidirectional microphones as in Sasaki) to a known device and method (Burnett '919's) that is ready for improvement and yields predictable results (improved speech detection). (*Id.*)

Finally, the combination represents a choice from a finite number of identified, predictable solutions. *KSR*, 550 U.S. at 421. Given a system with microphones, a POSITA would have had two choices for each microphone: a unidirectional microphone or an omnidirectional (e.g., nondirectional) microphone. (Ex. 1002 ¶162.) Both options are disclosed in the prior art, including in Sasaki. (*E.g.*, Ex. 1005, 3:10-15 (disclosing directional and omnidirectional microphones); Ex. 1002 ¶162.)

A POSITA would have had reasonably expected success in combining Burnett '919 (including as modified by Andrea) and Sasaki because unidirectional microphones were well known and using them to selectively attenuate a desired signal and a reference signal based on direction of arrival would have yielded a predictable result. (Ex. 1002 ¶163.) A POSITA would further have expected success because Sasaki discloses that its invention is "applicable to any microphone systems[.]" (Ex. 1005, 7:58-64; Ex. 1002 ¶163.)

Thus, the references disclose and/or render obvious claim 14. (Ex. 1002 ¶¶157-64.)

2. Claim 15

Claim 15 depends from claim 14 and further recites "wherein the first microphone and the second microphone are separated by a distance in a range of approximately zero (0) centimeters to 15 centimeters." Andrea discloses this limitation.

Andrea discloses a telephone handset with a "receiver portion" that "includes first and second microphones." (Ex. 1004, 12:38-40, Figs. 1, 3A-3B; *supra* §§VI.B.1.a.ii-iii, VI.B.2-3.) A POSITA would have understood that such an embodiment requires separating the first and second microphones by a distance of between zero and 15 centimeters. (Ex. 1002 ¶166.)

Moreover, in Andrea's headset embodiment (*supra* §VI.B.4), the first and second microphones are in "relatively close proximity to each other," and specifically within 0.5 inches (1.3cm) of each other. (Ex. 1004, 19:44-50; Ex. 1002 ¶167.) Thus, Andrea discloses and/or renders obvious this limitation.

Thus, the references disclose and/or render obvious claim 15. (Ex. 1002 ¶¶165-68.)

3. Claim 16

Claim 16 depends from claim 14 and further recites "wherein the angle is in a range of approximately greater than zero (0) degrees and one of equal to and less than 180 degrees." Burnett '919 and Andrea disclose and/or render obvious this limitation.

Burnett '919 shows an angle of roughly 180 degrees between the first and second microphones. (*Supra* §VI.B.1.a.iii.) Because Burnett '919 discloses an angle greater than zero degrees and equal to or less than 180 degrees, Burnett '919 discloses and/or suggests this limitation. (Ex. 1002 ¶170.)

Andrea's handset embodiment discloses that the first and second microphones are positioned with a relative angle of "between 30° and 60°." (Ex. 1004, 14:5-32; *supra* §VI.B.1.a.iii.) Moreover, Andrea's headset embodiment includes first and second microphones positioned "substantially 180° apart from each other." (Ex. 1004, 19:14-17, 19:39-43.) Andrea therefore discloses, for each embodiment, that the microphones are greater than zero degrees and equal to or less than 180 degrees apart. (Ex. 1002 ¶171.)

Thus, the references disclose and/or render obvious claim 16. (*Id.* ¶¶169-72.)

4. Claim 17

Claim 17 depends from claim 14 and further recites "wherein the angle is in a range of approximately greater than zero (0) degrees and one of equal to and less

than 135 degrees." The references disclose and/or render obvious claim 17 for the reasons discussed above. (*Supra* §VI.C.3; Ex. 1002 ¶173.)

5. Claim 18

Claim 18 depends from claim 14 and further recites "wherein the angle is in a range of approximately greater than zero (0) degrees and one of equal to and greater than 90 degrees." A POSITA would have understood that an angle of roughly 180 degrees is both "approximately greater than zero (0) degrees" and "greater than 90 degrees." (Ex. 1002 ¶174.) Accordingly, the references disclose and/or render obvious claim 18. (*Supra* §VI.C.3; Ex. 1002 ¶174.)

6. Claim 19

Claim 19 depends from claim 1 and further recites "wherein the first microphone is an omnidirectional microphone and the second microphone is a unidirectional microphone." Sasaki discloses and/or renders obvious this limitation.

Sasaki discloses an embodiment wherein the first microphone (e.g., the microphone designated to pick up speech and thus facing the user) "is constituted by an omnidirectional microphone … while the reference input microphone 21 [e.g., the second microphone] is constituted by a unidirectional microphone[.]" (Ex. 1005, 3:10-15, Fig. 3; Ex. 1002 ¶176.) A POSITA would have been motivated to modify Burnett '919's system (as modified by Hussain and/or Andrea) to include a unidirectional second microphone for the reasons discussed above. (*Supra* §VI.C.1;

Ex. 1002 ¶176.) A POSITA would have been motivated to use an omnidirectional microphone as the first microphone because, for example, omnidirectional microphones were cheaper and simpler than unidirectional microphones. (Ex. 1002 ¶176.) A POSITA would also have understood that the use of an omnidirectional first microphone and a unidirectional second microphone could provide a desirable directional characteristic, depending on what characteristic the POSITA wanted to achieve. (Ex. 1005, 8:4-14; Ex. 1002 ¶176.)

Thus, the references disclose and/or render obvious claim 19. (Ex. 1002 ¶¶175-77.)

7. Claim 20

Claim 20 depends from claim 19 and further recites "wherein the first microphone and the second microphone are separated by a distance approximately in a range of zero (0) centimeters to 15 centimeters." The references disclose and/or render obvious claim 20. (*Supra* §VI.C.2; Ex. 1002 ¶178.)

8. Claim 21

Claim 21 depends from claim 19 and further recites "wherein the angle is approximately in a range of 30 degrees to 180 degrees." The references disclose and/or render obvious claim 21. (*Supra* §VI.C.3; Ex. 1002 ¶179.)

9. Claim 22

Claim 22 depends from claim 19 and further recites "wherein the angle is approximately in a range of 60 degrees to 180 degrees." Burnett '919 and Andrea each disclose and/or render obvious this limitation because they disclose microphones disposed at an angle of approximately 180 degrees from each other. (*Supra* §VI.C.3; Ex. 1002 ¶180.) Thus, the references disclose and/or render obvious claim 22. (Ex. 1002 ¶180.)

10. Claim 23

Claim 23 depends from claim 19 and further recites "wherein the angle is approximately in a range of 90 degrees to 180 degrees." The references disclose and/or render obvious claim 23. (*Supra* §VI.C.3; Ex. 1002 ¶181.)

11. Claim 24

Claim 24 depends from claim 1 and further recites "wherein the first microphone is a unidirectional microphone and the second microphone is an omnidirectional microphone." Sasaki renders this limitation obvious.

As discussed above, Sasaki discloses the use of a unidirectional microphone for the primary, user-facing (e.g., first) microphone, and a POSITA would have been motivated to use that microphone in Burnett '919's system. (*Supra* §VI.C.1; Ex. 1002 ¶183.) Sasaki also discloses the use of a unidirectional microphone for the noise (e.g., non-user-facing second) microphone. (*Id.*) However, Sasaki also

discloses that "[f]urther substituting the second microphone with a microphone having a different directional characteristic [e.g., with an omnidirectional microphone] may change the directional characteristic of the entire microphone system, thus providing wide freedom in implementation of the directional characteristics." (Ex. 1005, 8:7-12.) Thus, a POSITA also would have been motivated to use an omnidirectional microphone as the second microphone to achieve certain directional characteristics. (Ex. 1002 ¶183.) For example, the POSITA may want to remove noise coming from the direction of, or similar to the direction of, the speaker. (*Id.*) Furthermore, a POSITA would have been motivated to use an omnidirectional microphone as the second microphone (instead of a unidirectional microphone, as also disclosed by Sasaki) because an omnidirectional microphone is cheaper and simpler than a unidirectional microphone. (*Id.*) Accordingly, a POSITA would have understood Sasaki to disclose, or at least suggest, using an omnidirectional microphone as the second microphone. (*Id.*)

Thus, the references disclose and/or render obvious claim 24. (*Id.* ¶¶182-84.)

12. Claim 25

Claim 25 depends from claim 24 and further recites "wherein the first microphone and the second microphone are separated by a distance approximately in a range of zero (0) centimeters to 15 centimeters." The references disclose and/or render obvious claim 25. (*Supra* §VI.C.2; Ex. 1002 ¶185.)

D. Ground 4: Obviousness over Grounds 1 or 2 References and Puthuff

Claim 3 depends from claim 1. As discussed above, the limitations of claim 1 are disclosed by the references in Grounds 1 and/or 2. (*Supra* §§VI.A-B.) Puthuff discloses the additional limitations of claim 3. Accordingly, claim 3 would have been obvious in view of the Grounds 1 and/or 2 references and Puthuff. (Ex. 1002 ¶¶186-98.)

1. Claim 3

Claim 3 depends from claim 1 and further recites "wherein the voice detection subsystem further comprises[] at least one accelerometer sensor in contact with skin for receiving the voice activity signals[,] and at least one voice activity detector (VAD) algorithm for processing the accelerometer sensor voice activity signals and generating the control signals." Burnett '919 and Puthuff disclose and/or render obvious this limitation.

Puthuff discloses a system that includes "sens[ing] sound through bone conduction." (Ex. 1007, 4:13-21.) A user's voice is detected in part using a "vibration sensor," which may be an "accelerometer." (*Id.*, 5:1-9.) Puthuff's vibration sensor "is a transducer device which senses the vibratory displacement of the bones in proximity to the ear as imparted primarily by vibrations during speech." (*Id.*, 9:1-6; *id.*, 8:12-16.) The device is "held against the skin of the talker's skull and may take the form of an ear level pickup worn behind the ear, or a telephone handset

held against the ear during telephonic communication." (*Id.*, 8:16-19.) Furthermore, Puthuff discloses that its system functions as a VAD to indicate whether or not speech is present. For example, Puthuff teaches that the incorporation of a vibration sensor "improves system immunity to false triggering due to noisy environments" and determines "the absence of the user's voice" to conserve power. (*Id.*, 6:6-10; Ex. 1002 ¶189.) Thus, Puthuff discloses using an accelerometer sensor in contact with the skin for receiving voice activity signals. (Ex. 1002 ¶189.)

As discussed above, Burnett '919 discloses that its voice detection subsystem detects voice activity signals (using one or more sensors) and generates control signals automatically, using the algorithm disclosed in Burnett '919 and incorporated reference Holzrichter '175. (*Supra* §VI.A.1.b; Ex. 1002 ¶190.) Thus, Burnett '919 discloses a VAD algorithm for processing voice activity signals and generating control signals. (*Id.*) A POSITA would have understood that Burnett '919's algorithm could be used with one or more accelerometers as in Puthuff replacing one or more EM sensors in Burnett '919's system. (Ex. 1002 ¶190.) A POSITA would have been motivated to use the same algorithm to ensure compatibility with the rest of Burnett '919's system. (*Id.*)

Thus, Burnett '919 and Puthuff disclose and/or render obvious claim 3. (*Id.* ¶¶188-91.)

2. Motivation to Combine

A POSITA would have been motivated to combine Burnett '919 (including as modified by Hussain, Andrea, and/or Sasaki) with Puthuff, and to use Puthuff's accelerometer as Burnett '919's voice detection sensor in place of Burnett '919's EM sensor, for several reasons. (Ex. 1002 ¶¶192-98.)

First, Burnett '919 and Puthuff both address the same problem—detecting voice activity in noisy environments. (Ex. 1003, 11:55-57, 17:50-53; Ex. 1007, Abstract, 1:7-2:6; Ex. 1002 ¶193.)

Second, Puthuff discloses that its system can operate using "off-the-shelf components" for reduced cost. (Ex. 1007, 12:17-18.) A POSITA would have looked to use readily available and inexpensive components such as an accelerometer, which was cheaper and simpler than Burnett '919's EM sensors, to detect speech in Burnett '919's system. (Ex. 1002 ¶194.)

Third, Puthuff discloses that detecting speech through an accelerometer or other vibration sensor is "particularly suitab[le] to voice-activated applications" because of reduced "false triggering due to noisy environments," for example when determining "the absence of the user's voice." (Ex. 1007, 6:6-10.) Thus, a POSITA would have looked to use a vibration sensor with Burnett '919's system in noisy environments for improved performance. (Ex. 1002 ¶195.)

Fourth, vibration sensors such as accelerometers had been known for decades. (Ex. 1007, 3:19-4:11; Ex. 1002 ¶196.) Thus, this combination represents the simple addition of one known element (an accelerometer as in Puthuff) to another known element (Burnett '919's noise cancellation system) to obtain the predictable results of efficient, effective noise cancellation. (Ex. 1002 ¶196); *KSR*, 550 U.S. at 417. Moreover, the combination represents the use of a known technique (using an accelerometer as in Puthuff) to improve a similar device and method (Burnett '919's noise cancellation system) in the same way. (*Id.*) The combination also applies a known technique (using an accelerometer as in Puthuff) to a known device and method (Burnett '919's system) that is ready for improvement and yields predictable results (a noise cancellation system that works effectively and efficiently). (*Id.*)

Fifth, Puthuff discloses that its system is useful for "dual microphone" systems. (Ex. 1007, 6:11-23.) Thus, a POSITA would have been motivated to apply Puthuff's teachings on detecting voice signals to Burnett '919's dual microphone system and would have had a reasonable expectation of success in doing so. (Ex. 1002 ¶197.)

A POSITA would also have reasonably expected success in combining Burnett '919 and Puthuff because they relate to similar systems (identifying voice through non-acoustic means), and the use of accelerometers and other vibration

sensors to detect voice was well known. (Ex. 1007, 3:19-4:11; Ex. 1008, 4:65-5:54, Abstract; Ex. 1002 ¶198.)

E. Ground 5: Obviousness over Grounds 1 or 2 References and Alcivar

Claim 4 depends from claim 1. As discussed above, the limitations of claim 1 are disclosed by the references in Grounds 1 and/or 2. (*Supra* §§VI.A-B.) Alcivar discloses the additional limitations of claim 4. Accordingly, claim 4 would have been obvious in view of the Grounds 1 and/or 2 references and Alcivar. (Ex. 1002 ¶¶199-209.)

1. Claim 4

Claim 4 depends from claim 1 and further recites "wherein the voice detection subsystem further comprises[] at least one skin-surface microphone sensor in contact with skin for receiving the voice activity signals[,] and at least one voice activity detector (VAD) algorithm for processing the skin-surface microphone sensor voice activity signals and generating the control signals." Alcivar discloses this limitation.

Alcivar discloses a "tissue-conduction microphone [] positioned in contact with the user's neck tissue in the vicinity of the larynx" for use in voice communication systems to detect voicing activity and control a voice-activated switch. (Ex. 1008, Abstract; *id.*, 1:5-8, 1:21-28, 1:31-33, 4:65-5:12.) Alcivar's tissue-conduction microphone detects "tissue vibrations due to modulation of the vocal chords (speech)[.]" (*Id.*, 4:65-5:6.) A POSITA would therefore have

understood Alcivar to disclose a SSM (e.g., a microphone that picks up voice signals using contact with a speaker's skin) that is in contact with skin for receiving voice activity signals. (Ex. 1002 ¶201.)

Alcivar's system receives voice activity signals using the tissue-conducting microphone and uses them to generate a "transmitter keying signal." (Ex. 1008, 4:65-67; Ex. 1002 ¶202.) Alcivar further processes the output of its tissue-conducting microphone, including using a "Schmitt trigger circuit 68," which "provide[s] sharply defined ON/OFF levels and some degree of immunity to low-level random noise inputs." (Ex. 1008, 5:55-67.) The signal is then sent to "audio detector 62." (*Id.*, 6:1-11.) A POSITA would have understood that the output of Alcivar's audio detector is a control signal that denotes when the user is or is not speaking. (*Id.*, 5:55-67, 8:3-16; Ex. 1002 ¶202.) Thus, Alcivar discloses a VAD algorithm for processing the voice activity signals and generating control signals. (Ex. 1002 ¶202.)

Burnett '919 also discloses and/or renders obvious the VAD algorithm limitation for the reasons discussed above. (*Supra* §§VI.A.1.b, VI.D.1; Ex. 1002 ¶203.)

2. Motivation to Combine

A POSITA would have been motivated to combine Burnett '919 (including as modified by Hussain, Andrea, and/or Sasaki) with Alcivar, and to use Alcivar's

SSM as Burnett '919's voice detection sensor in place of Burnett '919's EM sensor, for several reasons. (Ex. 1002 ¶¶204-09.)

First, Burnett '919 and Alcivar both address the same problem—detecting voice activity in noisy environments. (Ex. 1003, 11:55-57, 17:50-53; Ex. 1008, Abstract, 1:5-8, 1:25-27, 1:55-62; Ex. 1002 ¶205.)

Second, Alcivar explains SSMs can "discriminate against unwanted noises … without having to resort to more elaborate signal processing techniques." (Ex. 1008, 5:8-12.) A POSITA would have looked to use simpler and cheaper components such as a SSM (as compared to Burnett '919's EM sensors) to detect voice in Burnett '919's system. (Ex. 1002 ¶206.)

Third, Alcivar discloses that its tissue-conduction microphone is particularly useful in high-noise environments. (Ex. 1008, Abstract, 1:5-20 (acoustic microphone-based systems are "highly susceptible to false keying … by non-speech noises"), 1:25-27, 1:55-62 (system is "particularly suited for high noise environment communication systems").) Thus, a POSITA would have looked to use a SSM with Burnett '919's system in noisy environments for improved performance. (Ex. 1002 ¶207.)

Fourth, this combination represents nothing more than the simple addition of one known element (a SSM as in Alcivar) to another known element (Burnett '919's noise cancellation system) to obtain the predictable results of efficient, effective

noise cancellation. (*Id.* ¶208); *see KSR*, 550 U.S. at 417. Moreover, the combination represents the use of a known technique (using a SSM as in Alcivar) to improve a similar device and method (Burnett '919's noise cancellation system) in the same way. (*Id.*) The combination also applies a known technique (using a SSM as in Alcivar) to a known device and method (Burnett '919's system) that is ready for improvement and yields predictable results (a noise cancellation system that works effectively and efficiently). (*Id.*)

Alcivar discloses that its system "can be used in other communication systems[,]" leading a POSITA to reasonably expect success in combining it with Burnett '919. (Ex. 1008, 1:55-62; *id.*, 1:5-8, 1:34-36 (system "can be easily incorporated in existing communication systems"); Ex. 1002 ¶209.) A POSITA would also have had a reasonable expectation of success in combining Burnett '919 and Alcivar because they relate to similar systems (identifying voice through non-acoustic means), and the use of SSMs and other vibration sensors to detect voice was well known. (Ex. 1008, 4:65-5:54, Abstract; Ex. 1007, 3:19-4:11; Ex. 1002 ¶209.)

VII. SECONDARY CONSIDERATIONS OF NONOBVIOUSNESS

Secondary considerations should be considered but do not control the obviousness conclusion. *Newell Cos. v. Kenney Mfg. Co.,* 864 F.2d 757, 768 (Fed. Cir. 1988). Where a strong *prima facie* obviousness showing exists, even relevant

secondary considerations supported by substantial evidence may not dislodge obviousness conclusion. *Leapfrog Enters. v. Fisher-Price, Inc.,* 485 F.3d 1157, 1162 (Fed. Cir. 2007). Petitioner is aware of no evidence supporting a claim for secondary considerations.

VIII. DISCRETIONARY DENIAL UNDER §314(A) IS NOT APPROPRIATE.

The Board should decline to exercise its discretion under §314(a) because efficiency, fairness, and the merits support institution. *Apple v. Fintiv,* IPR202000019, Paper 11 (P.T.A.B. Mar. 20, 2020) ("*Fintiv*"). Each *Fintiv* factor is addressed below.

A. Co-Pending Litigation (*Fintiv*)

1. Factor 1: Potential Stay

On February 28, 2023, PO sued Petitioner for infringement of the '543 Patent in *Jawbone Innovations, LLC v. LG Electronics Inc.*, No. 2:23-cv-00078-JRG-RSP (E.D. Tex.), and no scheduling conference has been held. Petitioner will move to stay the litigation pending resolution of this and related IPRs. *See Amazon.com, Inc. v. Jawbone Innovations, LLC*, IPR2023-00275, Paper 10 (P.T.A.B. July 10, 2023) (instituting IPR involving '543 Patent).

The EDTX considers the following factors in determining whether to grant a stay pending IPR: "(1) whether the stay will unduly prejudice the nonmoving party, (2) whether the proceedings before the court have reached an advanced stage,

including whether discovery is complete and a trial date has been set, and (3) whether the stay will likely result in simplifying the case before the court." *Uniloc 2017 LLC v. Samsung Elecs. Am., Inc.*, No. 2:19-cv-00259-JRG-RSP, 2020 WL 1433960, at *2 (E.D. Tex. Mar. 24, 2020). Here, because an IPR has already been instituted on this patent, prejudice to PO due to staying the litigation pending resolution of the IPRs is minimal. Similarly, the litigation is still in the pleading stages and no trial date has been set. Finally, a stay pending resolution of the IPRs would simplify the issues before the court. Since all factors for evaluating a stay weigh in favor of granting such a motion, a stay is appropriate in this instance. Thus, this factor weighs against denial.

2. Factor 2: Proximity of Trial to FWD

The EDTX has not set a trial date. Indeed, no scheduling conference has been scheduled. Thus, this factor weighs against denial. *See, e.g.*, *Global Tel*Link Corp. v. HLFIP Holding, Inc.*, IPR 2021-00444, Paper 14 at 16-19 (P.T.A.B. Jul. 22, 2021) ("The lack of a scheduled trial date . . . typically weighs against exercising discretion to deny the Petition."); *GAF Materials LLC v. Kirsch Research and Dev., LLC*, IPR2021-00192, Paper 14, at 12-13 (PTAB May 25, 2021); *Skechers U.S.A., Inc. v. Nike, Inc.*, IPR2021-00160, Paper 10, at 9-11 (PTAB May 19, 2021).

3. Factor 3: Investment in Parallel Proceeding

PO served its complaint on February 28, 2023, and has not yet served any contentions or conducted any discovery. Petitioner has not yet answered the complaint, served any contentions, or conducted any discovery. The parties have thus invested very little in the district court action.

The EDTX has not established a case schedule. However, even if the EDTX imposes deadlines over the next 6 months (e.g., fact discovery, claim construction proceedings, etc.), any investment in those activities does not weigh in favor of discretionary denial. Much work will remain, including expert discovery, dispositive motions, pretrial motions, and trial. The "remaining investment and Petitioner's diligence" in filing the petition outweigh any investments made. *Samsung Elecs. Am., Inc. v. Snik LLC*, IPR2020-01428, Paper 10 at 11.

4. Factor 4: Overlapping Issues

If this IPR is instituted and the Litigation is stayed, Petitioner could not pursue in the Litigation any invalidity ground raised or that could have been reasonably raised in this IPR. *Cal. Inst. of Tech. v. Broadcom Ltd.*, 25 F.4th 976 (Fed. Cir. 2022). Thus, duplicative efforts or conflicting decisions are unlikely.

Petitioner hereby stipulates that, if this IPR is instituted and the Litigation is not stayed, Petitioner will not argue in the Litigation invalidity based on the grounds advanced in this petition. This weighs against denial. *Sand Revolution II, LLC v.*

Cont'l Intermodal Grp.-Trucking LLC, IPR2019-01393, Paper 24 at 11-12 (P.T.A.B. June 16, 2020) (informative).

5. Factor 5: The Parties

The parties are the same, but trial in the Litigation is unlikely to start before this IPR reaches FWD. Thus, this factor is neutral. *See Google*, IPR2022-00630, Paper 10 at 17.

6. Factor 6: Other Circumstances

The prior art here has never been considered by the PTO, any court, or any jury. The petition's merits are particularly strong, which favors institution. *Fintiv*, IPR2020-00019, Paper 11 at 18. Moreover, denying institution would negate Congress's intent in providing a 1-year period to file petitions and would encourage forum shopping as patent owners look to shield their patents from PTAB scrutiny by seeking judges with aggressive trial schedules.

Additionally, multiple IPR petitions challenging the claims of the '543 patent have been filed and are pending institution decision. *E.g.*, *Google LLC v. Jawbone Innovations, LLC*, IPR2022-01027; *Sony Elecs. Inc. v. Jawbone Innovations, LLC*, IPR2023-01222. Thus, the Board will be intimately familiar with the claims and relevant technology. Judicial efficiency favors having the same panel consider the patent's validity in view of Petitioner's prior art references.

Thus, the *Fintiv* analysis favors institution.

B. Prior Petitions for *Inter Partes* Review (*General Plastic*)

IPR petitions were previously filed by Samsung, Google, Apple, Amazon and Sony. Those petitions do not warrant discretionary denial under *General Plastic Indus. Co., Ltd. v. Canon Kabushiki Kaisha*, IPR2016-01357, Paper 19 at 15-16 (P.T.A.B. Sept. 6, 2017) (precedential).

LGE and the prior petitioners are not the same party and have no significant relationship. They are not co-defendants. They are competitors accused of infringement—in different actions pending in different courts—based on sales of different products. This weighs against denial. *NetNut Ltd. v. Bright Data Ltd.*, IPR2021-00465, Paper 11 at 9 (P.T.A.B. Aug. 12, 2021) (declining to extend *General Plastic* to different petitioner with no relationship to previous petitioners).

The remaining factors consider timing issues, e.g., when Petitioner became aware of prior art, whether the PO or Board responded to prior petitions, and the length of time that has passed. But the sequential IPR filings here were caused by PO's sequential district court filings, and therefore should not be held against Petitioner. Specifically, PO sued Samsung in May 2021. PO waited four months before suing Google and Apple. PO then waited another two months to sue Amazon. PO then waited over a year to sue Petitioner. The Board should not deny Petitioner's petition merely because PO sued other defendants earlier. *Toshiba Am. Info. Sys., Inc. v. Walletex Microelecs. Ltd.,* IPR2018-01538, Paper 11 at 21-22 (PTAB Mar. 5,

2019) (PO's complaint about multiple IPRs "is not persuasive when the volume appears to be a direct result of its own litigation activity").

IX. DISCRETIONARY DENIAL UNDER §325(D) IS NOT APPROPRIATE.

The Office has not previously considered "the same or substantially the same prior art or arguments." 35 U.S.C. §325(d). Here, all grounds rely on Burnett '919, which the PTO has never considered. Nor has the PTO considered "substantially the same prior art or arguments."[7] While other IPRs rely on Andrea and Holzrichter '175 (incorporated by reference into Burnett '919), this petition relies on disclosure in Burnett '919 that is not included in Holzrichter '175. Furthermore, Burnett '919 is the primary reference here whereas Andrea is the primary reference in the Google IPR (IPR2022-01027).

Furthermore, in prosecution, PO argued that the references the Examiner applied did not teach limitations regarding an independent voice activity sensor. In response to those arguments, the Examiner allowed the claims. However, Burnett '919 clearly discloses those limitations. Accordingly, the arguments in this IPR are not—and could not be—cumulative. Thus, the Board should not deny institution under §325(d).

[7] The same grounds are raised in the Amazon IPR that Petitioner seeks to join.

X. MANDATORY NOTICES

A. Real Parties-In-Interest (37 C.F.R. §42.8(b)(1))

LG Electronics Inc. is the real party-in-interest.

B. Related Matters (37 C.F.R. §42.8(b)(2))

To the best knowledge of Petitioner, the '543 patent is or has been involved in the following district court litigations and petitions for *inter partes* review:

Name	Number	Court	Filed
Jawbone Innovations, LLC v. LG Electronics Inc.	2:23-cv-00078	E.D. Tex.	Feb. 28, 2023
Jawbone Innovations, LLC v. Amazon.com, Inc.	3:22-cv-06727	N.D. Cal.	Nov. 29, 2021 (transferred from E.D. Tex. on Nov. 1, 2022)
Jawbone Innovations, LLC v. Amazon.com, Inc.	2:21-cv-00435	E.D. Tex.	Nov. 29, 2021
Jawbone Innovations, LLC v. Apple Inc.	6:21-cv-00984	W.D. Tex.	Sept. 23, 2021
Jawbone Innovations, LLC v. Google LLC	6:21-cv-00985	W.D. Tex.	Sept. 23, 2021
Jawbone Innovations, LLC v. Samsung Electronics Co., Ltd.	2:21-cv-00186	E.D. Tex.	May 27, 2021
Jawbone Innovations, LLC v. Sony Electronics, Inc.	2:23-cv-01161	D.N.J.	Feb. 28, 2023
Jawbone Innovations, LLC v. HTC Corporation	2:23-cv-00077	E.D. Tex.	Feb. 28, 2023
Jawbone Innovations, LLC v. Guangdong Oppo Mobile Telecommunications Corp., Ltd., d/b/a OPPO	2:23-cv-00079	E.D. Tex.	Feb. 28, 2023
Jawbone Innovations, LLC v. Panasonic Holdings Corporation	2:23-cv-00081	E.D. Tex.	Feb. 28, 2023

Jawbone Innovations, LLC v. ZTE Corporation	2:23-cv-00082	E.D. Tex.	Feb. 28, 2023
Jawbone Innovations, LLC v. Meta Platforms, Inc. d/b/a Meta	6:23-cv-00158	W.D. Tex.	Feb. 28, 2023
Jawbone Innovations, LLC v. Google LLC	3:23-cv-00466	N.D. Cal.	Feb. 1, 2023
Petition for *Inter Partes* Review	IPR2023-01222	P.T.A.B.	July 20, 2023
Petition for *Inter Partes* Review	IPR2023-00275	P.T.A.B.	Nov. 28, 2022
Petition for *Inter Partes* Review	IPR2022-01027	P.T.A.B.	May 25, 2022
Petition for *Inter Partes* Review	IPR2022-00865	P.T.A.B.	Apr. 26, 2022

C. Lead and Backup Counsel (37 C.F.R. §42.8(b)(3))

LGE provides the following designation of counsel:

Lead Counsel	Back-up Counsel
Indranil Mukerji (Reg. No. 46,944) imukerji@willkie.com LG_Jawbone_IPR_WFG@willkie.com <u>Postal and Hand-Delivery Address</u>: Willkie Farr & Gallagher LLP 1875 K Street, N.W. Washington, DC 20006-1238 Telephone: (202) 303-1190 Facsimile: (212) 728-8111	John C. Moulder (Reg. No. 70,490) cmoulder@willkie.com <u>Postal and Hand-Delivery Address</u>: Willkie Farr & Gallagher LLP 1875 K Street, N.W. Washington, DC 20006-1238 Telephone: (202) 303-1069 Facsimile: (202) 303 2000

Pursuant to 37 C.F.R. §42.10(b), a Power of Attorney accompanies this Petition. The above identified lead and backup counsel are registered practitioners associated with the firm listed in that Power of Attorney.

D. Service Information (37 C.F.R. §42.8(b)(4))

Service information for counsel is provided above. LGE consents to service by email at: LG_Jawbone_IPR_WFG@willkie.com.

E. Payment of Fees (37 C.F.R. §42.103)

The fee set forth in 37 C.F.R. §42.15(a) for this petition has been paid. Any additional fees due in connection with this petition may be charged to Deposit Account 232405.

F. Grounds for Standing (37 C.F.R. §42.104(a))

LGE certifies that the '543 patent is available for IPR and that LGE is not barred or estopped from requesting IPR. This petition is being filed within one year of service of the complaint in the co-pending district court litigation.

CONCLUSION

Petitioner requests institution of this IPR and cancellation of the claims.

Respectfully submitted,

WILLKIE FARR & GALLAGHER LLP

Dated: July 26, 2023

/Indranil Mukerji/

Indranil Mukerji (Reg. No. 46,944)
John C. Moulder (Reg. No. 70,490)

Attorneys for Petitioner
LG ELECTRONICS INC.

CERTIFICATE OF COMPLIANCE

Pursuant to 37 C.F.R. § 42.24(d), the undersigned certifies that foregoing **PETITION FOR *INTER PARTES* REVIEW OF CLAIMS 1-26 OF U.S. PATENT NO. 8,467,543**, exclusive of the parts exempted as provided in 37 C.F.R. §42.24(a), contains 13,965 words and therefore complies with the type-volume limitations of 37 C.F.R. §42.24(a).

Respectfully submitted,

WILLKIE FARR & GALLAGHER LLP

Dated: July 26, 2023

/Indranil Mukerji/
Indranil Mukerji (Reg. No. 46,944)
John C. Moulder (Reg. No. 70,490)

Attorneys for Petitioner
LG ELECTRONICS INC.

CERTIFICATE OF SERVICE

I hereby certify that a true and correct copy of the foregoing **PETITION FOR *INTER PARTES* REVIEW OF CLAIMS 1-26 OF U.S. PATENT NO. 8,467,543** and **EXHIBITS 1001-1028** are being served on July 26, 2023, via Federal Express overnight mail on counsel of record for U.S. Patent No. 8,467,543 as addressed below:

Mark Leonardo
Nutter McClennen & Fish LLP
Seaport West
155 Seaport Boulevard
Boston, MA 02210-2604

A courtesy copy is also being served on counsel for the patent holder in the pending litigation *Jawbone Innovations, LLC v. LG Electronics Inc.*, 2:23-cv-00078-JRG-RSP (E.D. Tex. filed February 28, 2023):

Alfred R. Fabricant
Peter Lambrianakos
Vincent J. Rubino, III
Richard M. Cowell
Jacob D. Ostling
FABRICANT LLP
411 Theodore Fremd Avenue,
Suite 206 South
Rye, New York 10580
Telephone: (212) 257-5797
Facsimile: (212) 257-5796
Email: ffabricant@fabricantllp.com
Email: plambrianakos@fabricantllp.com
Email: vrubino@fabricantllp.com
Email: jostling@fabricantllp.com

Email: rcowell@fabricantllp.com
Email: jawbone@fabricantllp.com

WILLKIE FARR & GALLAGHER LLP

Dated: July 26, 2023

/Indranil Mukerji/
Counsel for Petitioner,
LG ELECTRONICS INC.