US011298056B2

(12) **United States Patent**
Harper

(10) **Patent No.: US 11,298,056 B2**
(45) **Date of Patent: Apr. 12, 2022**

(54) **METHODS AND SYSTEMS FOR EARLY SIGNAL ATTENUATION DETECTION AND PROCESSING**

(71) Applicant: **ABBOTT DIABETES CARE INC.**, Alameda, CA (US)

(72) Inventor: **Wesley Scott Harper**, Alameda, CA (US)

(73) Assignee: **ABBOTT DIABETES CARE INC.**, Alameda, CA (US)

(*) Notice: Subject to any disclaimer, the term of this patent is extended or adjusted under 35 U.S.C. 154(b) by 0 days.

(21) Appl. No.: **17/411,154**

(22) Filed: **Aug. 25, 2021**

(65) **Prior Publication Data**

US 2021/0378564 A1 Dec. 9, 2021

Related U.S. Application Data

(63) Continuation of application No. 17/245,719, filed on Apr. 30, 2021, now Pat. No. 11,116,431, which is a continuation of application No. 16/228,910, filed on Dec. 21, 2018, now Pat. No. 11,013,431, which is a continuation of application No. 15/061,774, filed on Mar. 4, 2016, now Pat. No. 10,194,844, which is a continuation of application No. 13/925,694, filed on Jun. 24, 2013, now Pat. No. 9,310,230, which is a continuation of application No. 12/769,635, filed on Apr. 28, 2010, now Pat. No. 8,483,967.

(60) Provisional application No. 61/173,600, filed on Apr. 29, 2009.

(51) **Int. Cl.**

A61B 5/145	(2006.01)
A61B 5/1473	(2006.01)
A61B 5/1495	(2006.01)
G16H 40/40	(2018.01)
G01D 18/00	(2006.01)
G01N 31/22	(2006.01)
G01N 33/66	(2006.01)

(52) **U.S. Cl.**
CPC ***A61B 5/14532*** (2013.01); ***A61B 5/1473*** (2013.01); ***A61B 5/1495*** (2013.01); ***G01D 18/00*** (2013.01); ***G01N 31/22*** (2013.01); ***G01N 33/66*** (2013.01); ***G16H 40/40*** (2018.01)

(58) **Field of Classification Search**
CPC . A61B 5/14532; A61B 5/1473; A61B 5/1495; G16H 40/40; G01D 18/00; G01N 31/22; G01N 33/66
See application file for complete search history.

(56) **References Cited**

U.S. PATENT DOCUMENTS

3,581,062	A	5/1971	Aston
3,926,760	A	12/1975	Allen et al.
3,949,388	A	4/1976	Fuller
4,036,749	A	7/1977	Anderson
4,055,175	A	10/1977	Clemens et al.
4,129,128	A	12/1978	McFarlane
4,245,634	A	1/1981	Albisser et al.
4,327,725	A	5/1982	Cortese et al.
4,344,438	A	8/1982	Schultz
4,349,728	A	9/1982	Phillips et al.
4,425,920	A	1/1984	Bourland et al.
4,441,968	A	4/1984	Emmer et al.
4,464,170	A	8/1984	Clemens et al.
4,478,976	A	10/1984	Goertz et al.
4,494,950	A	1/1985	Fischell
4,509,531	A	4/1985	Ward
4,527,240	A	7/1985	Kvitash
4,538,616	A	9/1985	Rogoff
4,619,793	A	10/1986	Lee
4,671,288	A	6/1987	Gough
4,703,756	A	11/1987	Gough et al.
4,731,726	A	3/1988	Allen, III
4,749,985	A	6/1988	Corsberg
4,757,022	A	7/1988	Shults et al.
4,759,828	A	7/1988	Young et al.
4,777,953	A	10/1988	Ash et al.
4,779,618	A	10/1988	Mund et al.
4,847,785	A	7/1989	Stephens
4,854,322	A	8/1989	Ash et al.
4,890,620	A	1/1990	Gough

(Continued)

FOREIGN PATENT DOCUMENTS

EP	0098592	1/1984
EP	0127958	12/1984

(Continued)

OTHER PUBLICATIONS

Armour, J. C., et al., "Application of Chronic Intravascular Blood Glucose Sensor in Dogs", Diabetes, vol. 39, 1990, pp. 1519-1526.

(Continued)

Primary Examiner — Jerry Lin

(74) *Attorney, Agent, or Firm* — One LLP

(57) **ABSTRACT**

Provided are methods and apparatus for receiving sensor data from an analyte sensor of a sensor monitoring system, processing the received sensor data with time corresponding calibration data, outputting the processed sensor data, detecting one or more adverse conditions associated with the sensor monitoring system, disabling the output of the sensor data during the adverse condition time period, determining that the one or more detected adverse conditions is no longer present in the sensor monitoring system, retrieving the sensor data during the adverse condition time period, processing the retrieved sensor data during the adverse condition time period, and outputting the processed retrieved sensor data.

30 Claims, 7 Drawing Sheets

DEXCOM
EXHIBIT 1001

(56) **References Cited**

U.S. PATENT DOCUMENTS

4,925,268 A 5/1990 Iyer et al.
4,953,552 A 9/1990 DeMarzo
4,986,271 A 1/1991 Wilkins
4,995,402 A 2/1991 Smith et al.
5,000,180 A 3/1991 Kuypers et al.
5,002,054 A 3/1991 Ash et al.
5,019,974 A 5/1991 Beckers
5,050,612 A 9/1991 Matsumura
5,051,688 A 9/1991 Murase et al.
5,055,171 A 10/1991 Peck
5,082,550 A 1/1992 Rishpon et al.
5,106,365 A 4/1992 Hernandez
5,122,925 A 6/1992 Inpyn
5,135,004 A 8/1992 Adams et al.
5,165,407 A 11/1992 Wilson et al.
5,202,261 A 4/1993 Musho et al.
5,210,778 A 5/1993 Massart
5,228,449 A 7/1993 Christ et al.
5,231,988 A 8/1993 Wernicke et al.
5,246,867 A 9/1993 Lakowicz et al.
5,251,126 A 10/1993 Kahn et al.
5,262,035 A 11/1993 Gregg et al.
5,262,305 A 11/1993 Heller et al.
5,264,104 A 11/1993 Gregg et al.
5,264,105 A 11/1993 Gregg et al.
5,279,294 A 1/1994 Anderson et al.
5,285,792 A 2/1994 Sjoquist et al.
5,293,877 A 3/1994 O'Hara et al.
5,299,571 A 4/1994 Mastrototaro
5,320,725 A 6/1994 Gregg et al.
5,322,063 A 6/1994 Allen et al.
5,340,722 A 8/1994 Wolfbeis et al.
5,342,789 A 8/1994 Chick et al.
5,356,786 A 10/1994 Heller et al.
5,360,404 A 11/1994 Novacek et al.
5,372,427 A 12/1994 Padovani et al.
5,379,238 A 1/1995 Stark
5,384,547 A 1/1995 Lynk et al.
5,390,671 A 2/1995 Lord et al.
5,391,250 A 2/1995 Cheney, II et al.
5,394,877 A 3/1995 Orr et al.
5,402,780 A 4/1995 Faasse, Jr.
5,408,999 A 4/1995 Singh et al.
5,410,326 A 4/1995 Goldstein
5,411,647 A 5/1995 Johnson et al.
5,431,160 A 7/1995 Wilkins
5,431,921 A 7/1995 Thombre
5,462,645 A 10/1995 Albery et al.
5,472,317 A 12/1995 Field et al.
5,489,414 A 2/1996 Schreiber et al.
5,497,772 A 3/1996 Schulman et al.
5,507,288 A 4/1996 Bocker et al.
5,509,410 A 4/1996 Hill et al.
5,514,718 A 5/1996 Lewis et al.
5,531,878 A 7/1996 Vadgama et al.
5,552,997 A 9/1996 Massart
5,568,806 A 10/1996 Cheney, II et al.
5,569,186 A 10/1996 Lord et al.
5,582,184 A 12/1996 Erickson et al.
5,586,553 A 12/1996 Halili et al.
5,593,852 A 1/1997 Heller et al.
5,601,435 A 2/1997 Quv
5,609,575 A 3/1997 Larson et al.
5,628,310 A 5/1997 Rao et al.
5,640,954 A 6/1997 Pfeiffer et al.
5,653,239 A 8/1997 Pompei et al.
5,665,222 A 9/1997 Heller et al.
5,711,001 A 1/1998 Bussan et al.
5,711,861 A 1/1998 Ward et al.
5,726,646 A 3/1998 Bane et al.
5,735,285 A 4/1998 Albert et al.
5,748,103 A 5/1998 Flach et al.
5,771,891 A 6/1998 Gozani
5,772,586 A 6/1998 Heinonen et al.
5,791,344 A 8/1998 Schulman et al.
5,807,375 A 9/1998 Gross et al.
5,875,186 A 2/1999 Belanger et al.
5,899,855 A 5/1999 Brown
5,914,026 A 6/1999 Blubaugh, Jr. et al.
5,925,021 A 7/1999 Castellano et al.
5,942,979 A 8/1999 Luppino
5,951,521 A 9/1999 Mastrototaro et al.
5,957,854 A 9/1999 Besson et al.
5,961,451 A 10/1999 Reber et al.
5,964,993 A 10/1999 Blubaugh, Jr. et al.
5,965,380 A 10/1999 Heller et al.
5,971,922 A 10/1999 Arita et al.
5,972,199 A 10/1999 Heller et al.
5,987,353 A 11/1999 Khatchatrian et al.
5,995,860 A 11/1999 Sun et al.
6,001,067 A 12/1999 Shults et al.
6,004,278 A 12/1999 Botich et al.
6,022,315 A 2/2000 Iliff
6,024,699 A 2/2000 Surwit et al.
6,028,413 A 2/2000 Brockmann
6,049,727 A 4/2000 Crothall
6,052,565 A 4/2000 Ishikura et al.
6,066,243 A 5/2000 Anderson et al.
6,083,710 A 7/2000 Heller et al.
6,088,608 A 7/2000 Schulman et al.
6,091,975 A 7/2000 Daddona et al.
6,091,976 A 7/2000 Pfeiffer et al.
6,093,172 A 7/2000 Funderburk et al.
6,096,364 A 8/2000 Bok et al.
6,103,033 A 8/2000 Say et al.
6,117,290 A 9/2000 Say et al.
6,119,028 A 9/2000 Schulman et al.
6,120,676 A 9/2000 Heller et al.
6,121,009 A 9/2000 Heller et al.
6,121,611 A 9/2000 Lindsay et al.
6,122,351 A 9/2000 Schlueter, Jr. et al.
6,129,823 A 10/2000 Hughes et al.
6,134,461 A 10/2000 Say et al.
6,141,573 A 10/2000 Kurnik et al.
6,143,164 A 11/2000 Heller et al.
6,159,147 A 12/2000 Lichter et al.
6,162,611 A 12/2000 Heller et al.
6,175,752 B1 1/2001 Say et al.
6,200,265 B1 3/2001 Walsh et al.
6,212,416 B1 4/2001 Ward et al.
6,219,574 B1 4/2001 Cormier et al.
6,248,067 B1 6/2001 Causey, III et al.
6,254,586 B1 7/2001 Mann et al.
6,270,455 B1 8/2001 Brown
6,275,717 B1 8/2001 Gross et al.
6,283,761 B1 9/2001 Joao
6,284,478 B1 9/2001 Heller et al.
6,293,925 B1 9/2001 Safabash et al.
6,295,506 B1 9/2001 Heinonen et al.
6,306,104 B1 10/2001 Cunningham et al.
6,309,884 B1 10/2001 Cooper et al.
6,314,317 B1 11/2001 Willis
6,329,161 B1 12/2001 Heller et al.
6,348,640 B1 2/2002 Navot et al.
6,359,270 B1 3/2002 Bridson
6,359,444 B1 3/2002 Grimes
6,360,888 B1 3/2002 McIvor et al.
6,366,794 B1 4/2002 Moussy et al.
6,377,828 B1 4/2002 Chaiken et al.
6,379,301 B1 4/2002 Worthington et al.
6,418,332 B1 7/2002 Mastrototaro et al.
6,424,847 B1 7/2002 Mastrototaro et al.
6,427,088 B1 7/2002 Bowman, IV et al.
6,440,068 B1 8/2002 Brown et al.
6,471,689 B1 10/2002 Joseph et al.
6,478,736 B1 11/2002 Mault
6,484,045 B1 11/2002 Holker et al.
6,484,046 B1 11/2002 Say et al.
6,493,069 B1 12/2002 Nagashimada et al.
6,498,043 B1 12/2002 Schulman et al.
6,514,718 B2 2/2003 Heller et al.
6,546,268 B1 4/2003 Ishikawa et al.
6,551,494 B1 4/2003 Heller et al.
6,554,798 B1 4/2003 Mann et al.

(56) **References Cited**

U.S. PATENT DOCUMENTS

6,558,321	B1	5/2003	Burd et al.
6,558,351	B1	5/2003	Steil et al.
6,560,471	B1	5/2003	Heller et al.
6,561,978	B1	5/2003	Conn et al.
6,562,001	B2	5/2003	Lebel et al.
6,564,105	B2	5/2003	Starkweather et al.
6,565,509	B1	5/2003	Say et al.
6,571,128	B2	5/2003	Lebel et al.
6,572,542	B1	6/2003	Houben et al.
6,574,490	B2	6/2003	Abbink et al.
6,576,101	B1	6/2003	Heller et al.
6,577,899	B2	6/2003	Lebel et al.
6,579,690	B1	6/2003	Bonnecaze et al.
6,585,644	B2	7/2003	Lebel et al.
6,591,125	B1	7/2003	Buse et al.
6,595,919	B2	7/2003	Bemer et al.
6,605,200	B1	8/2003	Mao et al.
6,605,201	B1	8/2003	Mao et al.
6,607,509	B2	8/2003	Bobroff et al.
6,610,012	B2	8/2003	Mault
6,633,772	B2	10/2003	Ford et al.
6,635,014	B2	10/2003	Starkweather et al.
6,648,821	B2	11/2003	Lebel et al.
6,654,625	B1	11/2003	Say et al.
6,658,396	B1	12/2003	Tang et al.
6,659,948	B2	12/2003	Lebel et al.
6,668,196	B1	12/2003	Villegas et al.
6,675,030	B2	1/2004	Ciurczak et al.
6,676,816	B2	1/2004	Mao et al.
6,687,546	B2	2/2004	Lebel et al.
6,689,056	B1	2/2004	Kilcoyne et al.
6,694,191	B2	2/2004	Starkweather et al.
6,695,860	B1	2/2004	Ward et al.
6,702,857	B2	3/2004	Brauker et al.
6,733,446	B2	5/2004	Lebel et al.
6,740,075	B2	5/2004	Lebel et al.
6,741,877	B1	5/2004	Shults et al.
6,743,635	B2	6/2004	Neel et al.
6,746,582	B2	6/2004	Heller et al.
6,758,810	B2	7/2004	Lebel et al.
6,770,030	B1	8/2004	Schaupp et al.
6,789,195	B1	9/2004	Prihoda et al.
6,790,178	B1	9/2004	Mault et al.
6,809,653	B1	10/2004	Mann et al.
6,810,290	B2	10/2004	Lebel et al.
6,811,533	B2	11/2004	Lebel et al.
6,811,534	B2	11/2004	Bowman, IV et al.
6,813,519	B2	11/2004	Lebel et al.
6,837,858	B2	1/2005	Cunningham et al.
6,862,465	B2	3/2005	Shults et al.
6,873,268	B2	3/2005	Lebel et al.
6,881,551	B2	4/2005	Heller et al.
6,892,085	B2	5/2005	McIvor et al.
6,895,265	B2	5/2005	Silver
6,923,763	B1	8/2005	Kovatchev et al.
6,931,327	B2	8/2005	Goode, Jr. et al.
6,932,894	B2	8/2005	Mao et al.
6,936,006	B2	8/2005	Sabra
6,942,518	B2	9/2005	Liamos et al.
6,950,708	B2	9/2005	Bowman, IV et al.
6,958,705	B2	10/2005	Lebel et al.
6,968,294	B2	11/2005	Gutta et al.
6,971,274	B2	12/2005	Olin
6,974,437	B2	12/2005	Lebel et al.
6,990,366	B2	1/2006	Say et al.
6,997,907	B2	2/2006	Safabash et al.
6,998,247	B2	2/2006	Monfre et al.
6,999,854	B2	2/2006	Roth
7,003,336	B2	2/2006	Holker et al.
7,003,340	B2	2/2006	Say et al.
7,003,341	B2	2/2006	Say et al.
7,015,817	B2	3/2006	Copley et al.
7,016,713	B2	3/2006	Gardner et al.
7,024,245	B2	4/2006	Lebel et al.
7,025,774	B2	4/2006	Freeman et al.
7,027,848	B2	4/2006	Robinson et al.
7,027,931	B1	4/2006	Jones et al.
7,041,068	B2	5/2006	Freeman et al.
7,041,468	B2	5/2006	Drucker et al.
7,046,153	B2	5/2006	Oja et al.
7,052,483	B2	5/2006	Woicik
7,056,302	B2	6/2006	Douglas
7,074,307	B2	7/2006	Simpson et al.
7,081,195	B2	7/2006	Simpson et al.
7,092,891	B2	8/2006	Maus et al.
7,098,803	B2	8/2006	Mann et al.
7,108,778	B2	9/2006	Simpson et al.
7,110,803	B2	9/2006	Shults et al.
7,113,821	B1	9/2006	Sun et al.
7,123,950	B2	10/2006	Mannheimer
7,134,999	B2	11/2006	Brauker et al.
7,136,689	B2	11/2006	Shults et al.
7,153,265	B2	12/2006	Vachon
7,155,290	B2	12/2006	Von Arx et al.
7,171,274	B2	1/2007	Starkweather et al.
7,179,226	B2	2/2007	Crothall et al.
7,190,988	B2	3/2007	Say et al.
7,192,450	B2	3/2007	Brauker et al.
7,198,606	B2	4/2007	Boecker et al.
7,207,974	B2	4/2007	Safabash et al.
7,226,442	B2	6/2007	Sheppard et al.
7,226,978	B2	6/2007	Tapsak et al.
7,276,029	B2	10/2007	Goode, Jr. et al.
7,278,983	B2	10/2007	Ireland et al.
7,286,894	B1	10/2007	Grant et al.
7,299,082	B2	11/2007	Feldman et al.
7,310,544	B2	12/2007	Brister et al.
7,324,012	B2	1/2008	Mann et al.
7,329,239	B2	2/2008	Safabash et al.
7,364,592	B2	4/2008	Carr-Brendel et al.
7,366,556	B2	4/2008	Brister et al.
7,379,765	B2	5/2008	Petisce et al.
7,381,184	B2	6/2008	Funderburk et al.
7,402,153	B2	7/2008	Steil et al.
7,424,318	B2	9/2008	Brister et al.
7,429,258	B2	9/2008	Angel et al.
7,455,663	B2	11/2008	Bikovsky
7,460,898	B2	12/2008	Brister et al.
7,462,264	B2	12/2008	Heller et al.
7,467,003	B2	12/2008	Brister et al.
7,471,972	B2	12/2008	Rhodes et al.
7,494,465	B2	2/2009	Brister et al.
7,497,827	B2	3/2009	Brister et al.
7,499,002	B2	3/2009	Blasko et al.
7,519,408	B2	4/2009	Rasdal et al.
7,583,990	B2	9/2009	Goode, Jr. et al.
7,591,801	B2	9/2009	Brauker et al.
7,599,726	B2	10/2009	Goode, Jr. et al.
7,613,491	B2	11/2009	Boock et al.
7,615,007	B2	11/2009	Shults et al.
7,632,228	B2	12/2009	Brauker et al.
7,635,594	B2	12/2009	Holmes et al.
7,637,868	B2	12/2009	Saint et al.
7,640,048	B2	12/2009	Dobbles et al.
7,651,596	B2	1/2010	Petisce et al.
7,651,845	B2	1/2010	Doyle, III et al.
7,654,956	B2	2/2010	Brister et al.
7,657,297	B2	2/2010	Simpson et al.
7,697,967	B2	4/2010	Stafford
7,699,775	B2	4/2010	Desai et al.
7,711,402	B2	5/2010	Shults et al.
7,713,574	B2	5/2010	Brister et al.
7,715,893	B2	5/2010	Karnath et al.
7,727,147	B1	6/2010	Osorio et al.
7,731,657	B2	6/2010	Stafford
7,736,310	B2	6/2010	Taub
7,736,344	B2	6/2010	Moberg et al.
7,763,042	B2	7/2010	Iio et al.
7,766,829	B2	8/2010	Sloan et al.
7,811,231	B2	10/2010	Jin et al.
7,813,809	B2	10/2010	Strother et al.
7,822,454	B1	10/2010	Alden et al.
7,889,069	B2	2/2011	Fifolt et al.
7,899,545	B2	3/2011	John

(56) **References Cited**

U.S. PATENT DOCUMENTS

7,914,460	B2	3/2011	Melker et al.
7,938,797	B2	5/2011	Estes
7,941,200	B2	5/2011	Weinert et al.
7,946,985	B2	5/2011	Mastrototaro et al.
7,972,296	B2	7/2011	Braig et al.
7,976,466	B2	7/2011	Ward et al.
7,978,063	B2	7/2011	Baldus et al.
8,010,174	B2	8/2011	Goode, Jr. et al.
8,010,256	B2	8/2011	Oowada
8,192,394	B2	6/2012	Estes et al.
8,282,549	B2	10/2012	Brauker et al.
8,597,570	B2	12/2013	Terashima et al.
2001/0020124	A1	9/2001	Tamada
2001/0037060	A1	11/2001	Thompson et al.
2001/0037366	A1	11/2001	Webb et al.
2001/0047604	A1	12/2001	Valiulis
2002/0019022	A1	2/2002	Dunn et al.
2002/0054320	A1	5/2002	Ogino
2002/0095076	A1	7/2002	Krausman et al.
2002/0103499	A1	8/2002	Perez et al.
2002/0106709	A1	8/2002	Potts et al.
2002/0107557	A1	8/2002	Edell et al.
2002/0111832	A1	8/2002	Judge
2002/0128594	A1	9/2002	Das et al.
2002/0133107	A1	9/2002	Darcey
2002/0147135	A1	10/2002	Schnell
2002/0161288	A1	10/2002	Shin et al.
2002/0188748	A1	12/2002	Blackwell et al.
2003/0004403	A1	1/2003	Drinan et al.
2003/0005464	A1	1/2003	Gropper et al.
2003/0021729	A1	1/2003	Moller et al.
2003/0023461	A1	1/2003	Quintanilla et al.
2003/0028089	A1	2/2003	Galley et al.
2003/0060692	A1	3/2003	Ruchti et al.
2003/0060753	A1	3/2003	Starkweather et al.
2003/0114897	A1	6/2003	Von Arx et al.
2003/0147515	A1	8/2003	Kai et al.
2003/0163351	A1	8/2003	Brown
2003/0168338	A1	9/2003	Gao et al.
2003/0199790	A1	10/2003	Boecker et al.
2003/0208113	A1	11/2003	Mault et al.
2003/0212379	A1	11/2003	Bylund et al.
2004/0010207	A1	1/2004	Flaherty et al.
2004/0015102	A1	1/2004	Cummings et al.
2004/0041749	A1	3/2004	Dixon
2004/0054263	A1	3/2004	Moerman et al.
2004/0060818	A1	4/2004	Feldman et al.
2004/0063435	A1	4/2004	Sakamoto et al.
2004/0064068	A1	4/2004	DeNuzzio et al.
2004/0073266	A1	4/2004	Haefner et al.
2004/0078215	A1	4/2004	Dahlin et al.
2004/0106858	A1	6/2004	Say et al.
2004/0122353	A1	6/2004	Shahmirian et al.
2004/0133390	A1	7/2004	Osorio et al.
2004/0135684	A1	7/2004	Steinthal et al.
2004/0138588	A1	7/2004	Saikley et al.
2004/0147872	A1	7/2004	Thompson
2004/0152622	A1	8/2004	Keith et al.
2004/0167801	A1	8/2004	Say et al.
2004/0171921	A1	9/2004	Say et al.
2004/0176672	A1	9/2004	Silver et al.
2004/0204687	A1	10/2004	Mogensen et al.
2004/0204868	A1	10/2004	Maynard et al.
2004/0223985	A1	11/2004	Dunfiled et al.
2004/0247671	A1	12/2004	Prescott et al.
2004/0249253	A1	12/2004	Racchini et al.
2004/0254433	A1	12/2004	Bandis et al.
2004/0254434	A1	12/2004	Goodnow et al.
2004/0260478	A1	12/2004	Schwamm
2004/0267300	A1	12/2004	Mace
2005/0001024	A1	1/2005	Kusaka et al.
2005/0003470	A1	1/2005	Nelson et al.
2005/0004494	A1	1/2005	Perez et al.
2005/0027177	A1	2/2005	Shin et al.
2005/0031689	A1	2/2005	Shults et al.
2005/0038680	A1	2/2005	McMahon
2005/0043598	A1	2/2005	Goode, Jr. et al.
2005/0049179	A1	3/2005	Davidson et al.
2005/0070774	A1	3/2005	Addison et al.
2005/0090607	A1	4/2005	Tapsak et al.
2005/0096511	A1	5/2005	Fox et al.
2005/0096516	A1	5/2005	Soykan et al.
2005/0113886	A1	5/2005	Fischell et al.
2005/0114068	A1	5/2005	Chey et al.
2005/0116683	A1	6/2005	Cheng et al.
2005/0137530	A1	6/2005	Campbell et al.
2005/0173245	A1	8/2005	Feldman et al.
2005/0176136	A1	8/2005	Burd et al.
2005/0182306	A1	8/2005	Sloan
2005/0184153	A1	8/2005	Auchinleck
2005/0187442	A1	8/2005	Cho et al.
2005/0192493	A1	9/2005	Wuori
2005/0195930	A1	9/2005	Spital et al.
2005/0204134	A1	9/2005	Von Arx et al.
2005/0214892	A1	9/2005	Kovatchev et al.
2005/0245799	A1	11/2005	Brauker et al.
2005/0251033	A1	11/2005	Scarantino et al.
2005/0277912	A1	12/2005	John
2006/0001538	A1	1/2006	Kraft et al.
2006/0001551	A1	1/2006	Kraft et al.
2006/0010098	A1	1/2006	Goodnow et al.
2006/0015020	A1	1/2006	Neale et al.
2006/0015024	A1	1/2006	Brister et al.
2006/0017923	A1	1/2006	Ruchti et al.
2006/0020300	A1	1/2006	Nghiern et al.
2006/0031094	A1	2/2006	Cohen et al.
2006/0079740	A1	4/2006	Silver et al.
2006/0091006	A1	5/2006	Wang et al.
2006/0099971	A1	5/2006	Staton et al.
2006/0142651	A1	6/2006	Brister et al.
2006/0154642	A1	7/2006	Scannell
2006/0161225	A1	7/2006	Sormann et al.
2006/0166629	A1	7/2006	Reggiardo
2006/0173406	A1	8/2006	Haves et al.
2006/0189863	A1	8/2006	Peyser et al.
2006/0193375	A1	8/2006	Lee et al.
2006/0222566	A1	10/2006	Brauker et al.
2006/0224141	A1	10/2006	Rush et al.
2006/0226985	A1	10/2006	Goodnow et al.
2006/0247508	A1	11/2006	Fennell
2006/0247985	A1	11/2006	Liamos et al.
2006/0258929	A1	11/2006	Goode et al.
2006/0272652	A1	12/2006	Stocker et al.
2006/0290496	A1	12/2006	Peeters et al.
2006/0293607	A1	12/2006	Alt et al.
2007/0010950	A1	1/2007	Abensour et al.
2007/0016381	A1	1/2007	Karnath et al.
2007/0017983	A1	1/2007	Frank et al.
2007/0027381	A1	2/2007	Stafford
2007/0033074	A1	2/2007	Nitzan et al.
2007/0060869	A1	3/2007	Tolle et al.
2007/0060979	A1	3/2007	Strother et al.
2007/0066956	A1	3/2007	Finkel
2007/0073129	A1	3/2007	Shah et al.
2007/0078320	A1	4/2007	Stafford
2007/0078321	A1	4/2007	Mazza et al.
2007/0078322	A1	4/2007	Stafford
2007/0078818	A1	4/2007	Zvitz et al.
2007/0093786	A1	4/2007	Goldsmith et al.
2007/0118030	A1	5/2007	Bruce et al.
2007/0149875	A1	6/2007	Ouyang et al.
2007/0173706	A1	7/2007	Neinast et al.
2007/0173709	A1	7/2007	Petisce et al.
2007/0173710	A1	7/2007	Petisce et al.
2007/0191702	A1	8/2007	Yodfat et al.
2007/0203407	A1	8/2007	Hoss et al.
2007/0203539	A1	8/2007	Stone et al.
2007/0203966	A1	8/2007	Brauker et al.
2007/0208246	A1	9/2007	Brauker et al.
2007/0228071	A1	10/2007	Kamen et al.
2007/0231846	A1	10/2007	Cosentino et al.
2007/0232878	A1	10/2007	Kovatchev et al.
2007/0235331	A1	10/2007	Simpson et al.
2007/0249922	A1	10/2007	Peyser et al.

(56) **References Cited**

U.S. PATENT DOCUMENTS

2007/0255321 A1 11/2007 Gerber et al.
2007/0255348 A1 11/2007 Holtzclaw
2008/0004904 A1 1/2008 Tran
2008/0009692 A1 1/2008 Stafford
2008/0033254 A1 2/2008 Karnath et al.
2008/0039702 A1 2/2008 Hayter et al.
2008/0045824 A1 2/2008 Tapsak et al.
2008/0060955 A1 3/2008 Goodnow
2008/0061961 A1 3/2008 John
2008/0083617 A1 4/2008 Simpson et al.
2008/0092638 A1 4/2008 Brenneman et al.
2008/0114228 A1 5/2008 McCluskey et al.
2008/0125636 A1 5/2008 Ward et al.
2008/0127052 A1 5/2008 Rostoker
2008/0177149 A1 7/2008 Weinert et al.
2008/0194934 A1 8/2008 Ray et al.
2008/0194938 A1 8/2008 Brister et al.
2008/0197024 A1 8/2008 Simpson et al.
2008/0200788 A1 8/2008 Brister et al.
2008/0200789 A1 8/2008 Brister et al.
2008/0200791 A1 8/2008 Simpson et al.
2008/0201325 A1 8/2008 Doniger et al.
2008/0208025 A1 8/2008 Shults et al.
2008/0214918 A1 9/2008 Brister et al.
2008/0228051 A1 9/2008 Shults et al.
2008/0228054 A1 9/2008 Shults et al.
2008/0228055 A1 9/2008 Sher
2008/0234943 A1 9/2008 Ray et al.
2008/0242961 A1 10/2008 Brister et al.
2008/0242963 A1 10/2008 Essenpreis et al.
2008/0254544 A1 10/2008 Modzelewski et al.
2008/0262469 A1 10/2008 Brister et al.
2008/0269714 A1 10/2008 Mastrototaro et al.
2008/0269723 A1 10/2008 Mastrototaro et al.
2008/0287764 A1 11/2008 Rasdal et al.
2008/0296155 A1 12/2008 Shults et al.
2008/0300572 A1 12/2008 Rankers et al.
2008/0306434 A1 12/2008 Dobbles et al.
2008/0306435 A1 12/2008 Karnath et al.
2008/0306444 A1 12/2008 Brister et al.
2008/0312841 A1 12/2008 Hayter
2008/0312859 A1 12/2008 Skyggebjerg et al.
2008/0319085 A1 12/2008 Wright et al.
2009/0006061 A1 1/2009 Thukral et al.
2009/0012377 A1 1/2009 Jennewine et al.
2009/0018424 A1 1/2009 Karnath et al.
2009/0024177 A1 1/2009 Shuros et al.
2009/0030294 A1 1/2009 Petisce et al.
2009/0036758 A1 2/2009 Brauker et al.
2009/0036763 A1 2/2009 Brauker et al.
2009/0040022 A1 2/2009 Finkenzeller
2009/0043181 A1 2/2009 Brauker et al.
2009/0048503 A1 2/2009 Dalal et al.
2009/0054747 A1 2/2009 Fennell
2009/0054749 A1 2/2009 He
2009/0055149 A1 2/2009 Hayter et al.
2009/0062633 A1 3/2009 Brauker et al.
2009/0076356 A1 3/2009 Simpson et al.
2009/0076360 A1 3/2009 Brister et al.
2009/0082693 A1 3/2009 Stafford
2009/0085768 A1 4/2009 Patel et al.
2009/0085873 A1 4/2009 Betts et al.
2009/0088787 A1 4/2009 Koike et al.
2009/0093687 A1 4/2009 Telfort et al.
2009/0099436 A1 4/2009 Brister et al.
2009/0105636 A1 4/2009 Hayter et al.
2009/0124879 A1 5/2009 Brister et al.
2009/0124964 A1 5/2009 Leach et al.
2009/0131768 A1 5/2009 Simpson et al.
2009/0131769 A1 5/2009 Leach et al.
2009/0131776 A1 5/2009 Simpson et al.
2009/0131777 A1 5/2009 Simpson et al.
2009/0131860 A1 5/2009 Nielsen
2009/0137886 A1 5/2009 Shariati et al.
2009/0137887 A1 5/2009 Shariati et al.
2009/0143659 A1 6/2009 Li et al.
2009/0156924 A1 6/2009 Shariati et al.
2009/0163791 A1 6/2009 Brister et al.
2009/0178459 A1 7/2009 Li et al.
2009/0182217 A1 7/2009 Li et al.
2009/0192366 A1 7/2009 Mensinger et al.
2009/0192380 A1 7/2009 Shariati et al.
2009/0192722 A1 7/2009 Shariati et al.
2009/0192724 A1 7/2009 Brauker et al.
2009/0192745 A1 7/2009 Karnath et al.
2009/0192751 A1 7/2009 Karnath et al.
2009/0216100 A1 8/2009 Ebner et al.
2009/0216103 A1 8/2009 Brister et al.
2009/0240120 A1 9/2009 Mensinger et al.
2009/0240128 A1 9/2009 Mensinger et al.
2009/0240193 A1 9/2009 Mensinger et al.
2009/0242399 A1 10/2009 Karnath et al.
2009/0242425 A1 10/2009 Karnath et al.
2009/0247855 A1 10/2009 Boock et al.
2009/0247856 A1 10/2009 Boock et al.
2009/0298182 A1 12/2009 Schulat et al.
2009/0299155 A1 12/2009 Yang et al.
2009/0299156 A1 12/2009 Simpson et al.
2009/0299162 A1 12/2009 Brauker et al.
2009/0299276 A1 12/2009 Brauker et al.
2010/0076283 A1 3/2010 Simpson et al.
2010/0093786 A1 4/2010 Watanabe et al.
2010/0096259 A1 4/2010 Zhang et al.
2010/0105999 A1 4/2010 Dixon et al.
2010/0113897 A1 5/2010 Brenneman et al.
2010/0141656 A1 6/2010 Krieftewirth
2010/0146300 A1 6/2010 Brown
2010/0152554 A1 6/2010 Steine et al.
2010/0160759 A1 6/2010 Celentano et al.
2010/0168538 A1 7/2010 Keenan et al.
2010/0168540 A1 7/2010 Karnath et al.
2010/0168541 A1 7/2010 Karnath et al.
2010/0168542 A1 7/2010 Karnath et al.
2010/0168543 A1 7/2010 Karnath et al.
2010/0168544 A1 7/2010 Karnath et al.
2010/0168545 A1 7/2010 Karnath et al.
2010/0168546 A1 7/2010 Karnath et al.
2010/0168657 A1 7/2010 Karnath et al.
2010/0174168 A1 7/2010 Goode, Jr. et al.
2010/0174266 A1 7/2010 Estes
2010/0179399 A1 7/2010 Goode, Jr. et al.
2010/0179402 A1 7/2010 Goode, Jr. et al.
2010/0179405 A1 7/2010 Goode, Jr. et al.
2010/0179408 A1 7/2010 Karnath et al.
2010/0179409 A1 7/2010 Karnath et al.
2010/0185065 A1 7/2010 Goode, Jr. et al.
2010/0185071 A1 7/2010 Simpson et al.
2010/0185072 A1 7/2010 Goode, Jr. et al.
2010/0185073 A1 7/2010 Goode, Jr. et al.
2010/0185074 A1 7/2010 Goode, Jr. et al.
2010/0185075 A1 7/2010 Brister et al.
2010/0185175 A1 7/2010 Kamen et al.
2010/0198035 A1 8/2010 Karnath et al.
2010/0198142 A1 8/2010 Sloan et al.
2010/0213080 A1 8/2010 Celentano et al.
2010/0217105 A1 8/2010 Yodfat et al.
2010/0262201 A1 10/2010 He et al.
2010/0313105 A1 12/2010 Nekoomaram et al.
2010/0331642 A1 12/2010 Bruce et al.
2011/0024043 A1 2/2011 Boock et al.
2011/0024307 A1 2/2011 Simpson et al.
2011/0027127 A1 2/2011 Simpson et al.
2011/0027453 A1 2/2011 Boock et al.
2011/0027458 A1 2/2011 Boock et al.
2011/0028815 A1 2/2011 Simpson et al.
2011/0028816 A1 2/2011 Simpson et al.
2011/0031986 A1 2/2011 Bhat et al.
2011/0077490 A1 3/2011 Simpson et al.
2011/0148905 A1 6/2011 Simmons et al.
2011/0178461 A1 7/2011 Chong et al.
2011/0208027 A1 8/2011 Wagner et al.
2011/0257895 A1 10/2011 Brauker et al.
2011/0287528 A1 11/2011 Fern et al.
2011/0320130 A1 12/2011 Valdes et al.

(56) **References Cited**

U.S. PATENT DOCUMENTS

2012/0078071	A1	3/2012	Bohm et al.
2012/0108934	A1	5/2012	Valdes et al.
2012/0165626	A1	6/2012	Irina et al.
2012/0165640	A1	6/2012	Galley et al.
2013/0035575	A1	2/2013	Mayou et al.
2013/0235166	A1	9/2013	Jones et al.

FOREIGN PATENT DOCUMENTS

EP	0320109		6/1989
EP	0390390		10/1990
EP	0396788		11/1990
EP	1 707 115	A2	10/2006
WO	WO-00/59370		10/2000
WO	WO-01/52935		7/2001
WO	WO-01/54753		8/2001
WO	WO-03/82091		10/2003
WO	WO-2008/001366		1/2008
WO	WO 2008/051409	A2	5/2008
WO	WO 2008/052199	A3	5/2008
WO	WO 2008/061552	A1	5/2008

OTHER PUBLICATIONS

Bennion, N., et al., "Alternate Site Glucose Testing: A Crossover Design", Diabetes Technology & Therapeutics. vol. 4, No. 1, 2002, pp. 25-33.

Blank, T. B., et al., "Clinical Results from a Non-Invasive Blood Glucose Monitor", Optical Diagnostics and Sensing of Biological Fluids and Glucose and Cholesterol Monitoring II, Proceedings of SPIE, vol. 4624, 2002, pp. 1-10.

Brooks, S. L., et al., "Development of an On-line Glucose Sensor for Fermentation Monitoring", Biosensors, vol. 3, 1987, pp. 45-56.

Cass, A. E.G., et al., "Ferrocene-Medicated Enzyme Electrode for Amperometric Determination of Glucose", Analytical Chemistry, vol. 56, No. 4, 1984, pp. 667-671.

Cheyne, E.H., et al., "Performance of a Continuous Glucose Monitoring System During Controlled Hypoglycaemia in Healthy Volunteers", Diabetes Technology & Therapeutics, vol. 4, No. 5, 2002, pp. 607-613.

Csoregi, E., et al., "Design and Optimization of a Selective Subcutaneously Implantable Glucose Electrode Based on "Wired" Glucose Oxidase", Analytical Chemistry, vol. 67, No. 7, 1995, pp. 1240-1244.

Feldman, B., et al., "A Continuous Glucose Sensor Based on Wired Enzyme™ Technology—Results from a 3-Day Trial in Patients with Type 1 Diabetes", Diabetes Technology & Therapeutics, vol. 5 No. 5, 2003, pp. 769-779.

Feldman, B., et al., "Correlation of Glucose Concentrations in Interstitial Fluid and Venous Blood During Periods of Rapid Glucose Change", Abbott Diabetes Care, Inc. Freestyle Navigator Continuous Glucose Monitor Pamphlet, 2004.

Isermann, R., "Supervision, Fault-Detection and Fault-Diagnosis Methods—An Introduction", Control Engineering Practice, vol. 5, No. 5, 1997, pp. 639-652.

Isermann, R., et al., "Trends in the Application of Model-Based Fault Detection and Diagnosis of Technical Processes", Control Engineering Practice, vol. 5, No. 5, 1997, pp. 709-719.

Johnson, P. C., "Peripheral Circulation", John Wiley & Sons, 1978, p. 198.

Jovanovic, L., "The Role of Continuous Glucose Monitoring in Gestational Diabetes Mellitus", Diabetes Technology & Therapeutics, vol. 2, Suppl. 1, 2000, pp. S67-S71.

Jungheim, K., et al., "How Rapid Does Glucose Concentration Change in Daily Life of Patients with Type 1 Diabetes?", Diabetologia, vol. 45, 2002, pp. 250.

Jungheim, K., et al., "Risky Delay of Hypoglycemia Detection by Glucose Monitoring at the Arm", Diabetes Care, vol. 24, No. 7, 2001, pp. 1303-1304.

Kaplan, S. M., "Wiley Electrical and Electronics Engineering Dictionary", IEEE Press, 2004, pp. 141, 142, 548, 549.

Lodwig, V., et al., "Continuous Glucose Monitoring with Glucose Sensors: Calibration and Assessment Criteria", Diabetes Technology & Therapeutics, vol. 5, No. 4, 2003, pp. 573-587.

Lortz, J., et al., "What is Bluetooth? We Explain The Newest Short-Range Connectivity Technology", Smart Computing Learning Series, Wireless Computing, vol. 8, Issue 5, 2002, pp. 72-74.

Malin, S. F., et al., "Noninvasive Prediction of Glucose by Near-Infrared Diffuse Reflectance Spectroscopy", Clinical Chemistry, vol. 45, No. 9, 1999, pp. 1651-1658.

McGarraugh, G., et al., "Glucose Measurements Using Blood Extracted from the Forearm and the Finger", TheraSense, Inc., 2001, 16 Pages.

McGarraugh, G., et al., "Physiological Influences on Off-Finger Glucose Testing", Diabetes Technology & Therapeutics, vol. 3, No. 3, 2001, pp. 367-376.

McKean, B. D., et al., "A Telemetry-Instrumentation System for Chronically Implanted Glucose and Oxygen Sensors", IEEE Transactions on Biomedical Engineering, vol. 35, No. 7, 1988, pp. 526-532.

Morbiducci, U., et al., "Improved usability of the minimal model of insulin sensitivity based on an automated approach and genetic algorithms for parameter estimation", Clinical Science, vol. 112, 2007, pp. 257-263.

Mougiakakou, S.G., et al., "A Real Time Simulation Model of Glucose-Insulin Metabolism for Type 1 Diabetes Patients", Proceedings of the 2005 IEEE Engineering in Medicine and Biology 27th Annual Conference, 2005, pp. 298-301.

Parker, R., et al., "Robust H∞ Glucose Control in Diabetes Using a Physiological Model", AIChE Journal, vol. 46, No. 12, 2000, pp. 2537-2549.

Pickup, J. C., et al., "Implantable Glucose Sensors: Choosing the Appropriate Sensing Strategy", Biosensors, vol. 3, 1987/88, pp. 335-346.

Pickup, J. C., et al., "In vivo molecular sensing in diabetes mellitus: an implantable glucose sensor with direct electron transfer", Diabetologia, vol. 32, 1989, pp. 213-217.

Pishko, M. V., et al., "Amperometric Glucose Microelectrodes Prepared through Immobilization of Glucose Oxidase in Redox Hydrogels", Analytical Chemistry, vol. 63, No. 20, 1991, pp. 2268-2272.

Quinn, C. P., et al., "Kinetics of glucose delivery to subcutaneous tissue in rats measured with 0.3-mm amperometric microsensors", American Journal of Physiology, vol. 269, No. 1, 1995, E155-E161.

Roe, J. N., et al., "Bloodless Glucose Measurements", Critical Reviews™ in Therapeutic Drug Carrier Systems, vol. 15, Issue 3, 1998, pp. 199-241.

Sakakida, M., et al., "Development of ferrocene-mediated needle-type glucose sensor as a measure of true subcutaneous tissue glucose concentrations", Artificial Organs Today, vol. 2, No. 2, 1992, pp. 145-158.

Sakakida, M., et al., "Ferrocene-mediated needle-type glucose sensor covered with newly designed biocompatible membrane", Sensors and Actuators B, vol. 13-14, 1993, pp. 319-322.

Salehi, C., et al., "A Telemetry-Instrumentation System for Long-Term Implantable Glucose and Oxygen Sensors", Analytical Letters, vol. 29, No. 13, 1996, pp. 2289-2308.

Schmidtke, D. W., et al., "Measurement and modeling of the transient difference between blood and subcutaneous glucose concentrations in the rat after injection of insulin", Proceedings of the National Academy of Sciences, vol. 95, 1998, pp. 294-299.

Shaw, G. W., et al., "In Vitro testing of a simply constructed, highly stable glucose sensor suitable for implantation in diabetic patients", Biosensors & Bioelectronics, vol. 6, 1991, pp. 401-406.

Shichiri, M., et al., "Glycaemic Control in Pancreatectomized Dogs with a Wearable Artificial Endocrine Pancreas", Diabetologia, vol. 24, 1983, pp. 179-184.

Shichiri, M., et al., "In Vivo Characteristics of Needle-Type Glucose Sensor—Measurements of Subcutaneous Glucose Concentrations in Human Volunteers", Hormone and Metabolic Research Supplement Series, vol. 20, 1988, pp. 17-20.

(56) **References Cited**

OTHER PUBLICATIONS

Shichiri, M., et al., "Membrane design for extending the long-life of an implantable glucose sensor", Diabetes Nutrition and Metabolism, vol. 2, 1989, pp. 309-313.
Shichiri, M., et al., "Needle-type Glucose Sensor for Wearable Artificial Endocrine Pancreas", Implantable Sensors for Closed-Loop Prosthetic Systems, Chapter 15, 1985, pp. 197-210.
Shichiri, M., et al., "Telemetry Glucose Monitoring Device With Needle-Type Glucose Sensor: A Useful Tool for Blood Glucose Monitoring in Diabetic Individuals", Diabetes Care, vol. 9, No. 3, 1986, pp. 298-301.
Shichiri, M., et al., "Wearable Artificial Endocrine Pancreas with Needle-Type Glucose Sensor", The Lancet, 1982, pp. 1129-1131.
Shults, M. C., et al., "A Telemetry-Instrumentation System for Monitoring Multiple Subcutaneously Implanted Glucose Sensors", IEEE Transactions on Biomedical Engineering, vol. 41, No. 10, 1994, pp. 937-942.
Sternberg, R., et al., "Study and Development of Multilayer Needle-type Enzyme-based Glucose Microsensors", Biosensors, vol. 4, 1988, pp. 27-40.
Thompson, M., et al., "In Vivo Probes: Problems and Perspectives", Clinical Biochemistry, vol. 19, 1986, pp. 255-261.
Turner, A.P.F., et al., "Diabetes Mellitus: Biosensors for Research and Management", Biosensors, vol. 1, 1985, pp. 85-115.
Updike, S. J., et al., "Principles of Long-term Fully Implanted Sensors with Emphasis on Radiotelemetric Monitoring of Blood Glucose from inside a Subcutaneous Foreign Body Capsule (FBC)", Biosensors in the Body: Continuous In vivo Monitoring, Chapter 4, 1997, pp. 117-137.
Velho, G., et al., "Strategies for calibrating a subcutaneous glucose sensor", Biomedica Biochimica Acta, vol. 48, 1989, pp. 957-964.
Wilson, G. S., et al., "Progress toward the Development of an Implantable Sensor for Glucose", Clinical Chemistry, vol. 38, No. 9, 1992, pp. 1613-1617.

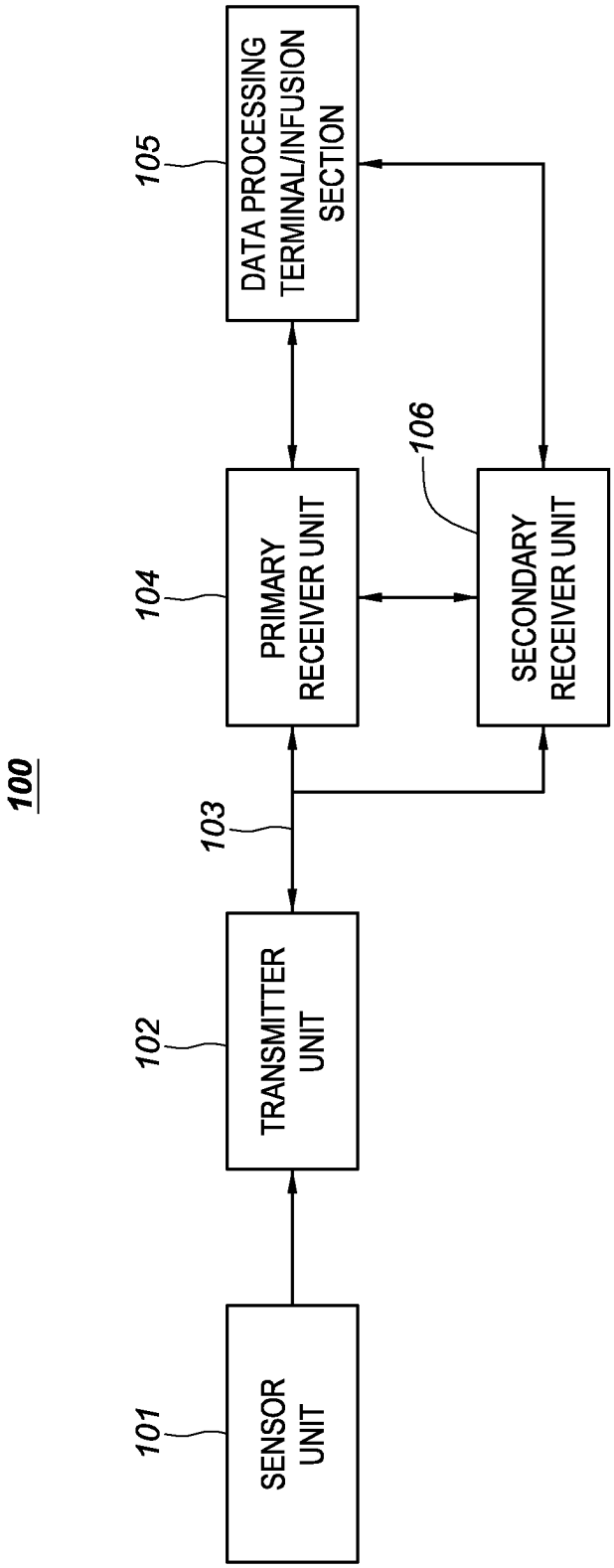
100
101
SENSOR UNIT
102
TRANSMITTER UNIT
103
104
PRIMARY RECEIVER UNIT
105
DATA PROCESSING TERMINAL/INFUSION SECTION
106
SECONDARY RECEIVER UNIT

FIG. 1

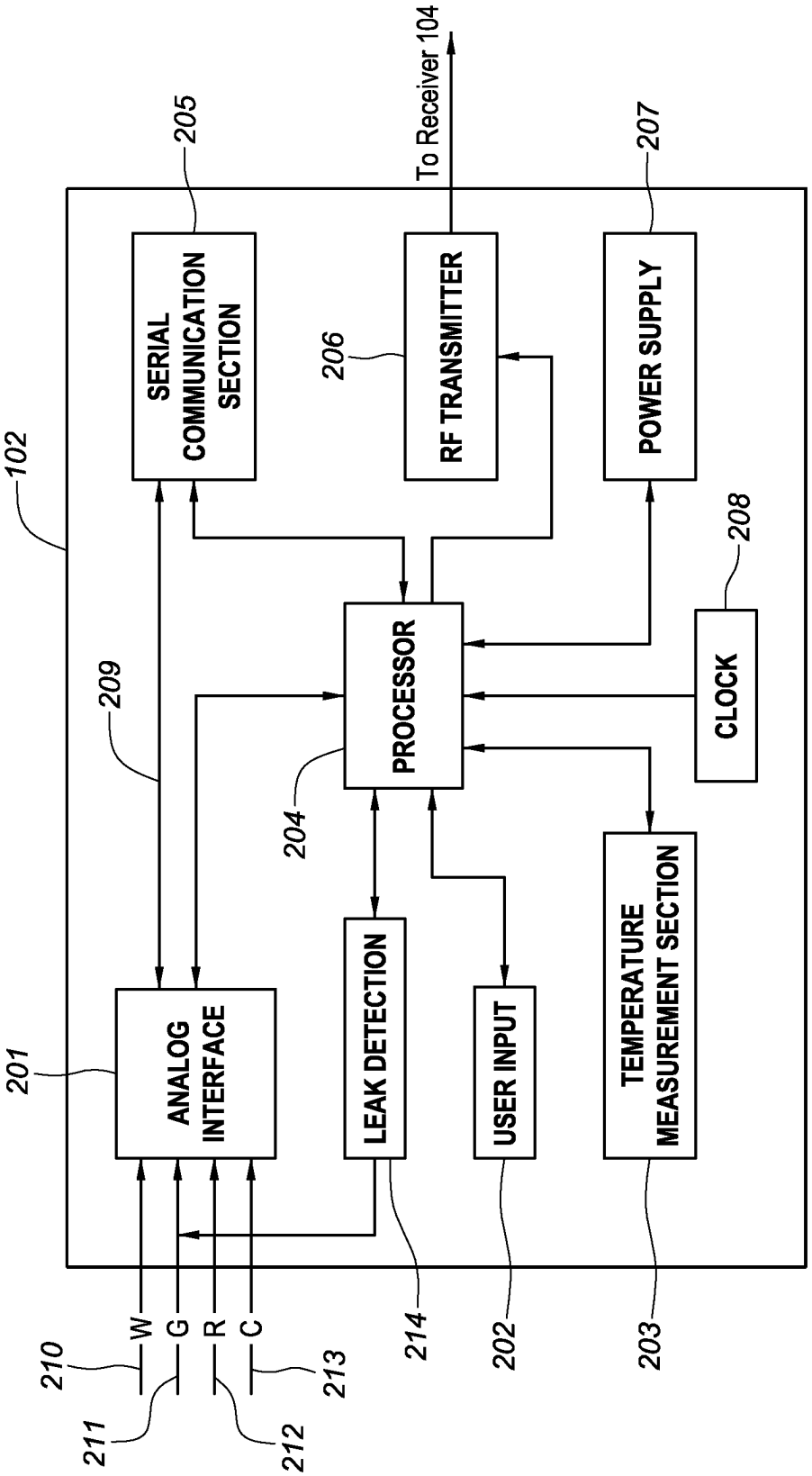
To Receiver 104
205
207
SERIAL COMMUNICATION SECTION
206
RF TRANSMITTER
POWER SUPPLY
102
208
209
PROCESSOR
CLOCK
204
TEMPERATURE MEASUREMENT SECTION
LEAK DETECTION
USER INPUT
201
ANALOG INTERFACE
W
G
R
C
210
211
212
213
214
202
203

FIG. 2

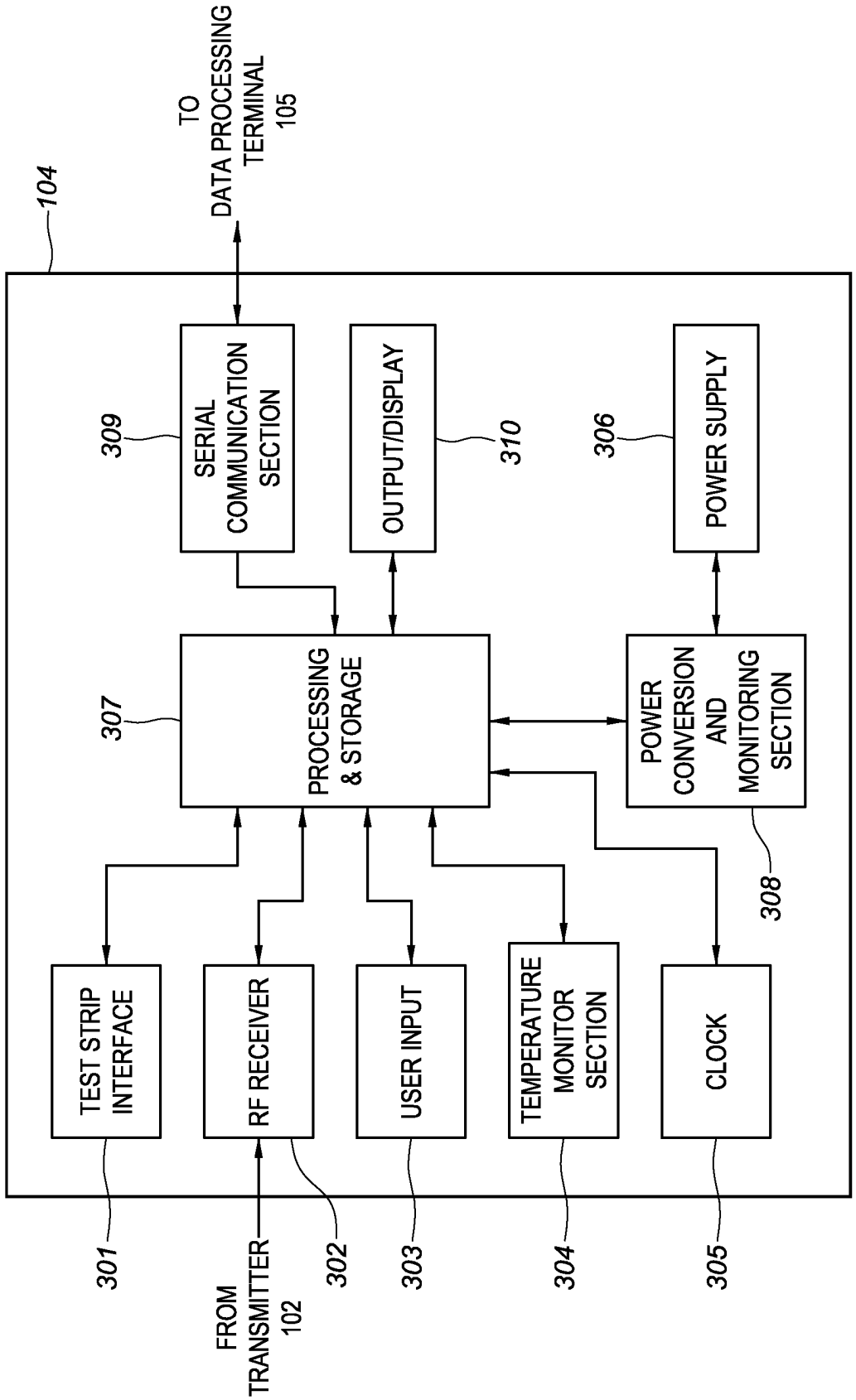
104
TO
DATA PROCESSING
TERMINAL
105
309
SERIAL
COMMUNICATION
SECTION
OUTPUT/DISPLAY
310
306
POWER SUPPLY
307
PROCESSING
& STORAGE
POWER
CONVERSION
AND
MONITORING
SECTION
308
TEST STRIP
INTERFACE
RF RECEIVER
USER INPUT
TEMPERATURE
MONITOR
SECTION
CLOCK
301
FROM
TRANSMITTER
102
302
303
304
305

FIG. 3

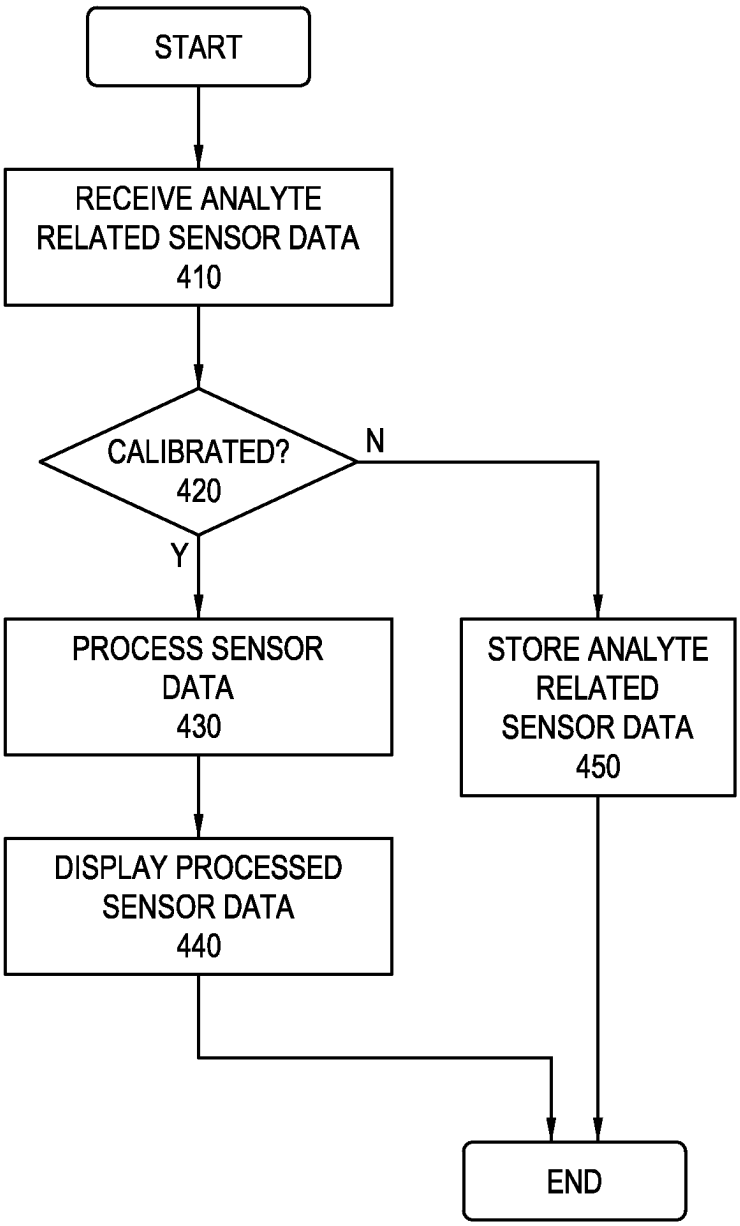
START
RECEIVE ANALYTE RELATED SENSOR DATA 410
CALIBRATED? 420
N
Y
PROCESS SENSOR DATA 430
STORE ANALYTE RELATED SENSOR DATA 450
DISPLAY PROCESSED SENSOR DATA 440
END

FIG. 4

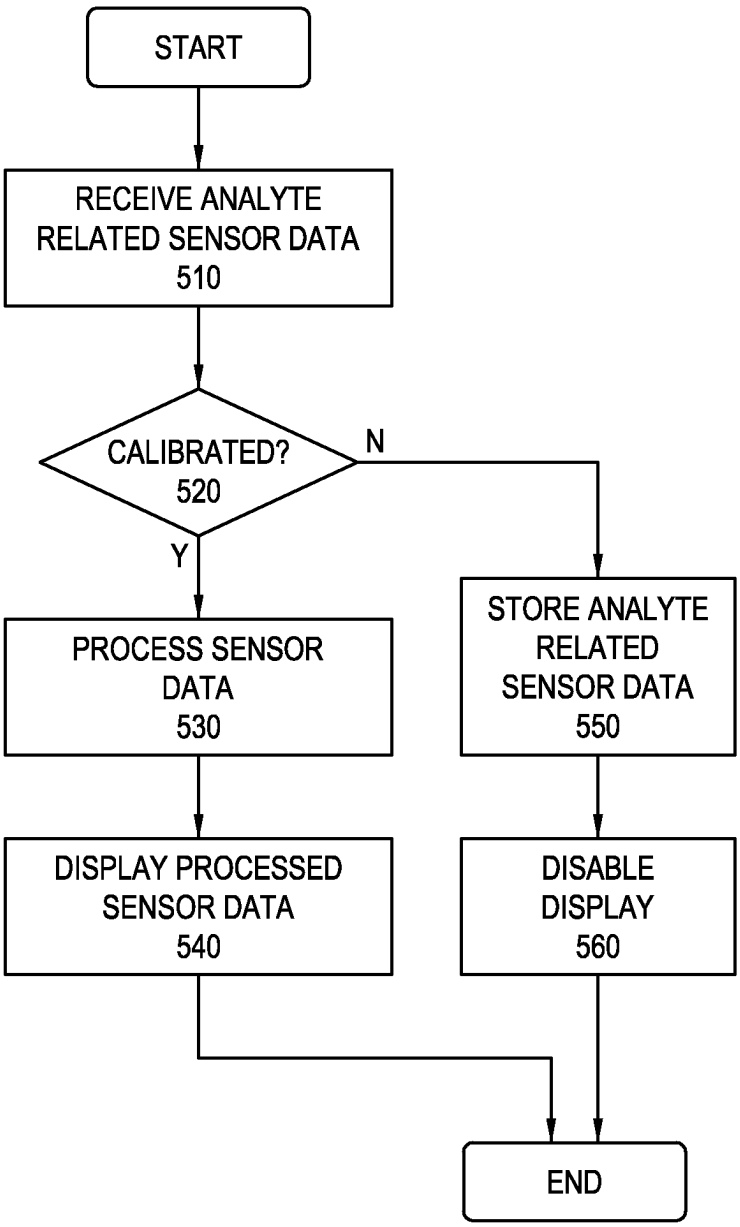
START
RECEIVE ANALYTE RELATED SENSOR DATA 510
CALIBRATED? 520
N
Y
PROCESS SENSOR DATA 530
STORE ANALYTE RELATED SENSOR DATA 550
DISPLAY PROCESSED SENSOR DATA 540
DISABLE DISPLAY 560
END

FIG. 5

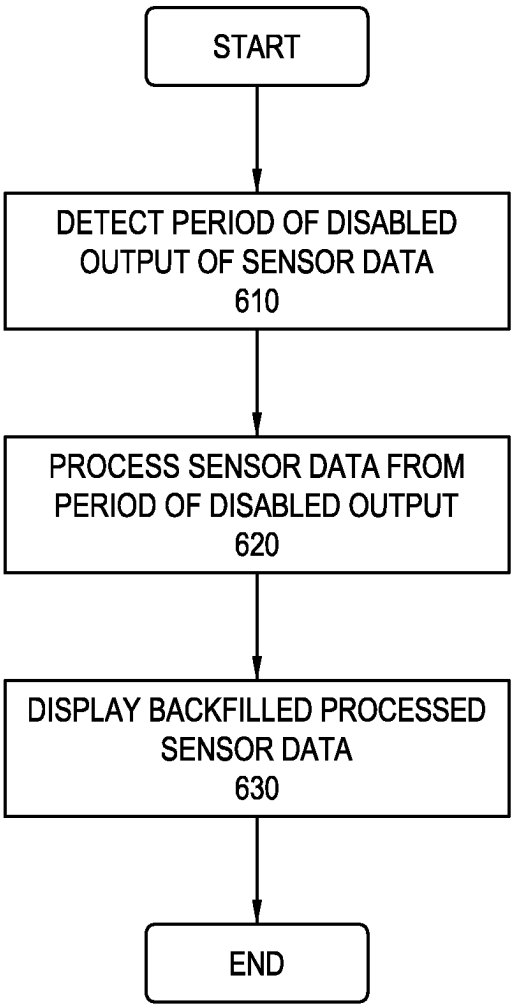
START
DETECT PERIOD OF DISABLED OUTPUT OF SENSOR DATA
610
PROCESS SENSOR DATA FROM PERIOD OF DISABLED OUTPUT
620
DISPLAY BACKFILLED PROCESSED SENSOR DATA
630
END

FIG. 6

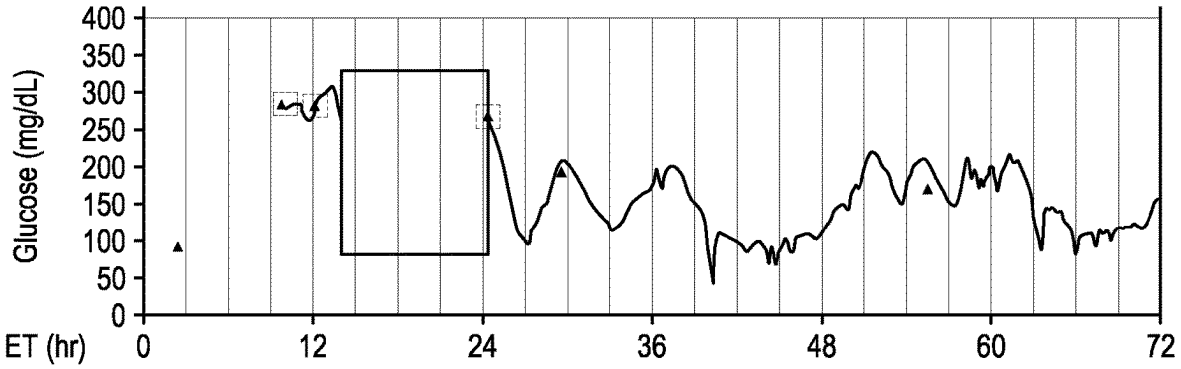
Glucose (mg/dL)
400
350
300
250
200
150
100
50
0
ET (hr)
0
12
24
36
48
60
72

FIG. 7A

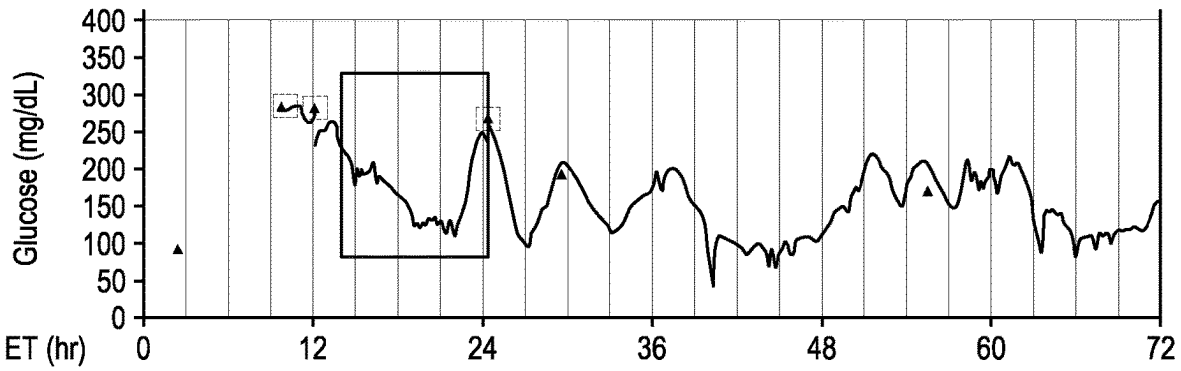
Glucose (mg/dL)
400
350
300
250
200
150
100
50
0
ET (hr)
0
12
24
36
48
60
72

FIG. 7B

METHODS AND SYSTEMS FOR EARLY SIGNAL ATTENUATION DETECTION AND PROCESSING

RELATED APPLICATIONS

The present application is a continuation of U.S. patent application Ser. No. 17/245,719, filed Apr. 30, 2021, which is a continuation of U.S. patent application Ser. No. 16/228,910, filed Dec. 21, 2018, now U.S. Pat. No. 11,013,431, which is a continuation of U.S. patent application Ser. No. 15/061,774, filed Mar. 4, 2016, now U.S. Pat. No. 10,194,844, which is a continuation of U.S. patent application Ser. No. 13/925,694, filed Jun. 24, 2013, now U.S. Pat. No. 9,310,230, which is a continuation of U.S. patent application Ser. No. 12/769,635, filed Apr. 28, 2010, now U.S. Pat. No. 8,483,967, which claims the benefit of U.S. Provisional Patent Application No. 61/173,600, filed Apr. 29, 2009, the disclosures of all of which are incorporated herein by reference in their entireties for all purposes.

BACKGROUND

Analyte, e.g., glucose monitoring systems including continuous and discrete monitoring systems generally include a small, lightweight battery powered and microprocessor controlled system which is configured to detect signals proportional to the corresponding measured glucose levels using an electrometer. RF signals may be used to transmit the collected data. One aspect of certain analyte monitoring systems includes a transcutaneous or subcutaneous analyte sensor configuration which is, for example, at least partially positioned through the skin layer of a subject whose analyte level is to be monitored. The sensor may use a two or three-electrode (work, reference and counter electrodes) configuration driven by a controlled potential (potentiostat) analog circuit connected through a contact system.

An analyte sensor may be configured so that a portion thereof is placed under the skin of the patient so as to contact analyte of the patient, and another portion or segment of the analyte sensor may be in communication with the transmitter unit. The transmitter unit may be configured to transmit the analyte levels detected by the sensor over a wireless communication link such as an RF (radio frequency) communication link to a receiver/monitor unit. The receiver/monitor unit may perform data analysis, among other functions, on the received analyte levels to generate information pertaining to the monitored analyte levels.

SUMMARY

Devices and methods for analyte monitoring, e.g., glucose monitoring, and/or therapy management system including, for example, medication infusion devices are provided. Embodiments include transmitting information from a first location to a second, e.g., using a telemetry system such as RF telemetry. Systems herein include continuous analyte monitoring systems, discrete analyte monitoring system, and therapy management systems.

Embodiments include receiving sensor data from an analyte sensor of a sensor monitoring system, processing the received sensor data with time corresponding calibration data, outputting the processed sensor data, detecting one or more adverse conditions associated with the sensor monitoring system, disabling the output of the sensor data during a adverse condition time period, determining that the one or more detected adverse conditions is no longer present in the sensor monitoring system, retrieving the sensor data during the adverse condition time period, processing the retrieved sensor data during the adverse condition time period, and outputting the processed retrieved sensor data.

Embodiments include detecting a condition unsuitable for calibration of an analyte sensor for a predetermined time period, disabling output of information associated with the analyte sensor, determining a successful calibration of the analyte sensor, retrieving one or more parameters associated with the successful calibration, processing sensor data during the time period of disabled output of information with the one or more parameters associated with the successful calibration, and displaying the processed sensor data for the time period of disabled information output.

Embodiments include an interface configured to receive sensor data, a first memory configured to store the received sensor data, a processor coupled to the memory and configured to process the stored sensor data, a second memory coupled to the processor and configured to store the processed sensor data, and a display unit coupled to the second memory and configured to display the processed sensor data, where the processor is further configured to detect a condition unsuitable for calibration of a sensor for a predetermined time period, disable display of processed sensor data, determine a successful calibration of the sensor, retrieve one or more parameters associated with the successful calibration, process the sensor data during the time period of disabled display of sensor data with the one or more parameters associated with the successful calibration, and display the processed sensor data for the time period of disabled information output.

These and other objects, features and advantages of the present disclosure will become more fully apparent from the following detailed description of the embodiments, the appended claims and the accompanying drawings.

INCORPORATION BY REFERENCE

The following patents, applications and/or publications are incorporated herein by reference for all purposes: U.S. Pat. Nos. 4,545,382; 4,711,245; 5,262,035; 5,262,305; 5,264,104; 5,320,715; 5,509,410; 5,543,326; 5,593,852; 5,601,435; 5,628,890; 5,820,551; 5,822,715; 5,899,855; 5,918,603; 6,071,391; 6,103,033; 6,120,676; 6,121,009; 6,134,461; 6,143,164; 6,144,837; 6,161,095; 6,175,752; 6,270,455; 6,284,478; 6,299,757; 6,338,790; 6,377,894; 6,461,496; 6,503,381; 6,514,460; 6,514,718; 6,540,891; 6,560,471; 6,579,690; 6,591,125; 6,592,745; 6,600,997; 6,605,200; 6,605,201; 6,616,819; 6,618,934; 6,650,471; 6,654,625; 6,676,816; 6,730,200; 6,736,957; 6,746,582; 6,749,740; 6,764,581; 6,773,671; 6,881,551; 6,893,545; 6,932,892; 6,932,894; 6,942,518; 7,167,818; and 7,299,082; U.S. Published Application Nos. 2004/0186365; 2005/0182306; 2007/0056858; 2007/0068807; 2007/0227911; 2007/0233013; 2008/0081977; 2008/0161666; and 2009/0054748; U.S. patent application Ser. Nos. 11/831,866; 11/831,881; 11/831,895; 12/102,839; 12/102,844; 12/102,847; 12/102,855; 12/102,856; 12/152,636; 12/152,648; 12/152,650; 12/152,652; 12/152,657; 12/152,662; 12/152,670; 12/152,673; 12/363,712; 12/131,012; 12/242,823; 12/363,712; 12/393,921; 12/495,709; 12/698,124; 12/699,653; 12/699,844; 12/714,439; 12/761,372; and 12/761,387 and U.S. Provisional Application Nos. 61/230,686 and 61/227,967.

BRIEF DESCRIPTION OF THE DRAWINGS

FIG. **1** illustrates a block diagram of a data monitoring and management system for practicing one or more embodiments of the present disclosure;

FIG. **2** is a block diagram of the transmitter unit of the data monitoring and management system shown in FIG. **1** in accordance with one embodiment of the present disclosure;

FIG. **3** is a block diagram of the receiver/monitor unit of the data monitoring and management system shown in FIG. **1** in accordance with one embodiment of the present disclosure;

FIG. **4** illustrates analyte sensor data processing in accordance with one embodiment of the present disclosure;

FIG. **5** illustrates analyte sensor data processing in accordance with one embodiment of the present disclosure;

FIG. **6** illustrates backfilling gaps in sensor data in one embodiment of the present disclosure; and

FIGS. **7**A and **7**B illustrate backfill of gaps of a period of uncalibrated sensor data in one embodiment.

DETAILED DESCRIPTION

Before the present disclosure is described in additional detail, it is to be understood that this disclosure is not limited to particular embodiments described, as such may, of course, vary. It is also to be understood that the terminology used herein is for the purpose of describing particular embodiments only, and is not intended to be limiting, since the scope of the present disclosure will be limited only by the appended claims.

Where a range of values is provided, it is understood that each intervening value, to the tenth of the unit of the lower limit unless the context clearly dictates otherwise, between the upper and lower limit of that range and any other stated or intervening value in that stated range, is encompassed within the disclosure. The upper and lower limits of these smaller ranges may independently be included in the smaller ranges is also encompassed within the disclosure, subject to any specifically excluded limit in the stated range. Where the stated range includes one or both of the limits, ranges excluding either or both of those included limits are also included in the disclosure.

Unless defined otherwise, all technical and scientific terms used herein have the same meaning as commonly understood by one of ordinary skill in the art to which this disclosure belongs. Although any methods and materials similar or equivalent to those described herein can also be used in the practice or testing of the present disclosure, the preferred methods and materials are now described. All publications mentioned herein are incorporated herein by reference to disclose and describe the methods and/or materials in connection with which the publications are cited.

It must be noted that as used herein and in the appended claims, the singular forms "a", "an", and "the" include plural referents unless the context clearly dictates otherwise.

The publications discussed herein are provided solely for their disclosure prior to the filing date of the present application. Nothing herein is to be construed as an admission that the present disclosure is not entitled to antedate such publication by virtue of prior disclosure. Further, the dates of publication provided may be different from the actual publication dates which may need to be independently confirmed.

As will be apparent to those of skill in the art upon reading this disclosure, each of the individual embodiments described and illustrated herein has discrete components and features which may be readily separated from or combined with the features of any of the other several embodiments without departing from the scope or spirit of the present disclosure.

The figures shown herein are not necessarily drawn to scale, with some components and features being exaggerated for clarity.

As described in further detail below, in accordance with the various embodiments of the present disclosure, there is provided a method and system for positioning a controller unit within a transmission range for close proximity communication, transmitting one or more predefined close proximity commands, and receiving a response packet in response to the transmitted one or more predefined close proximity commands. For example, in one aspect, close proximity communication includes short range wireless communication between communication components or devices, where the communication range is limited to about 10 inches or less, about 5 inches or less, or about 2 inches or less, or other suitable, short range or distance between the devices. The close proximity wireless communication in certain embodiments includes a bi-directional communication where a command sending communication device, when positioned within the short communication range or in close proximity to the command receiving communication device, is configured to transmit one or more commands to the command receiving communication device (for example, when a user activates or actuates a transmit command button or switch). In response, the command receiving communication device may be configured to perform one or more routines associated with the received command, and/or return or send back a response data packet or signal to the command sending communication device. Example of such functions and or commands may include, but not limited to activation of certain functions or routines such as analyte related data processing, and the like.

FIG. **1** illustrates a data monitoring and management system such as, for example, analyte (e.g., glucose) monitoring system **100** in accordance with one embodiment of the present disclosure. The subject invention is further described primarily with respect to a glucose monitoring system for convenience and such description is in no way intended to limit the scope of the invention. It is to be understood that the analyte monitoring system may be configured to monitor a variety of analytes, e.g., lactate, and the like.

Analytes that may be monitored include, for example, acetyl choline, amylase, bilirubin, cholesterol, chorionic gonadotropin, creatine kinase (e.g., CK-MB), creatine, DNA, fructosamine, glucose, glutamine, growth hormones, hormones, ketones, lactate, peroxide, prostate-specific antigen, prothrombin, RNA, thyroid stimulating hormone, and troponin. The concentration of drugs, such as, for example, antibiotics (e.g., gentamicin, vancomycin, and the like), digitoxin, digoxin, drugs of abuse, theophylline, and warfarin, may also be monitored. More than one analyte may be monitored by a single system, e.g., a single analyte sensor.

The analyte monitoring system **100** includes a sensor unit **101**, a data processing and transmitter unit **102** coupleable to the sensor unit **101**, and a primary receiver unit **104** which is configured to communicate with the data processing and transmitter unit **102** via a bi-directional communication link **103**. The primary receiver unit **104** may be further configured to transmit data to a data processing terminal **105** for evaluating the data received by the primary receiver unit **104**. Moreover, the data processing terminal **105** in one embodiment may be configured to receive data directly from the data processing and transmitter unit **102** via a communication link which may optionally be configured for bi-

directional communication. Accordingly, data processing and transmitter unit **102** and/or receiver unit **104** may include a transceiver.

Also shown in FIG. **1** is an optional secondary receiver unit **106** which is operatively coupled to the communication link and configured to receive data transmitted from the data processing and transmitter unit **102**. Moreover, as shown in the Figure, the secondary receiver unit **106** is configured to communicate with the primary receiver unit **104** as well as the data processing terminal **105**. Indeed, the secondary receiver unit **106** may be configured for bi-directional wireless communication with each or one of the primary receiver unit **104** and the data processing terminal **105**. As discussed in further detail below, in one embodiment of the present disclosure, the secondary receiver unit **106** may be configured to include a limited number of functions and features as compared with the primary receiver unit **104**. As such, the secondary receiver unit **106** may be configured substantially in a smaller compact housing or embodied in a device such as a wrist watch, pager, mobile phone, PDA, for example. Alternatively, the secondary receiver unit **106** may be configured with the same or substantially similar functionality as the primary receiver unit **104**. The receiver unit may be configured to be used in conjunction with a docking cradle unit, for example for one or more of the following or other functions: placement by bedside, for re-charging, for data management, for night time monitoring, and/or bi-directional communication device.

In one aspect sensor unit **101** may include two or more sensors, each configured to communicate with data processing and transmitter unit **102**. Furthermore, while only one, data processing and transmitter unit **102**, communication link **103**, and data processing terminal **105** are shown in the embodiment of the analyte monitoring system **100** illustrated in FIG. **1**. However, it will be appreciated by one of ordinary skill in the art that the analyte monitoring system **100** may include one or more sensors, multiple transmitter units **102**, communication links **103**, and data processing terminals **105**. Moreover, within the scope of the present disclosure, the analyte monitoring system **100** may be a continuous monitoring system, or semi-continuous, or a discrete monitoring system. In a multi-component environment, each device is configured to be uniquely identified by each of the other devices in the system so that communication conflict is readily resolved between the various components within the analyte monitoring system **100**.

In one embodiment of the present disclosure, the sensor unit **101** is physically positioned in or on the body of a user whose analyte level is being monitored. The sensor unit **101** may be configured to continuously sample the analyte level of the user and convert the sampled analyte level into a corresponding data signal for transmission by the data processing and transmitter unit **102**. In certain embodiments, the data processing and transmitter unit **102** may be physically coupled to the sensor unit **101** so that both devices are integrated in a single housing and positioned on the user's body. The data processing and transmitter unit **102** may perform data processing such as filtering and encoding on data signals and/or other functions, each of which corresponds to a sampled analyte level of the user, and in any event data processing and transmitter unit **102** transmits analyte information to the primary receiver unit **104** via the communication link **103**. Examples of such integrated sensor and transmitter units can be found in, among others, U.S. patent application Ser. No. 12/698,124, incorporated herein by reference.

In one embodiment, the analyte monitoring system **100** is configured as a one-way RF communication path from the data processing and transmitter unit **102** to the primary receiver unit **104**. In such embodiment, the data processing and transmitter unit **102** transmits the sampled data signals received from the sensor unit **101** without acknowledgement from the primary receiver unit **104** that the transmitted sampled data signals have been received. For example, the data processing and transmitter unit **102** may be configured to transmit the encoded sampled data signals at a fixed rate (e.g., at one minute intervals) after the completion of the initial power on procedure. Likewise, the primary receiver unit **104** may be configured to detect such transmitted encoded sampled data signals at predetermined time intervals. Alternatively, the analyte monitoring system **100** may be configured with a bi-directional RF (or otherwise) communication between the data processing and transmitter unit **102** and the primary receiver unit **104**.

Additionally, in one aspect, the primary receiver unit **104** may include two sections. The first section is an analog interface section that is configured to communicate with the data processing and transmitter unit **102** via the communication link **103**. In one embodiment, the analog interface section may include an RF receiver and an antenna for receiving and amplifying the data signals from the data processing and transmitter unit **102**, which are thereafter, demodulated with a local oscillator and filtered through a band-pass filter. The second section of the primary receiver unit **104** is a data processing section which is configured to process the data signals received from the data processing and transmitter unit **102** such as by performing data decoding, error detection and correction, data clock generation, and data bit recovery.

In operation, upon completing the power-on procedure, the primary receiver unit **104** is configured to detect the presence of the data processing and transmitter unit **102** within its range based on, for example, the strength of the detected data signals received from the data processing and transmitter unit **102** and/or a predetermined transmitter identification information. Upon successful synchronization with the corresponding data processing and transmitter unit **102**, the primary receiver unit **104** is configured to begin receiving from the data processing and transmitter unit **102** data signals corresponding to the user's detected analyte level. More specifically, the primary receiver unit **104** in one embodiment is configured to perform synchronized time hopping with the corresponding synchronized data processing and transmitter unit **102** via the communication link **103** to obtain the user's detected analyte level.

Referring again to FIG. **1**, the data processing terminal **105** may include a personal computer, a portable computer such as a laptop or a handheld device (e.g., personal digital assistants (PDAs)), and the like, each of which may be configured for data communication with the receiver via a wired or a wireless connection. Additionally, the data processing terminal **105** may further be connected to a data network (not shown) for storing, retrieving and updating data corresponding to the detected analyte level of the user.

Within the scope of the present disclosure, the data processing terminal **105** may include an infusion device such as an insulin infusion pump (external or implantable) or the like, which may be configured to administer insulin to patients, and which may be configured to communicate with the receiver unit **104** for receiving, among others, the measured analyte level. Alternatively, the receiver unit **104** may be configured to integrate or otherwise couple to an infusion device therein so that the receiver unit **104** is

configured to administer insulin therapy to patients, for example, for administering and modifying basal profiles, as well as for determining appropriate boluses for administration based on, among others, the detected analyte levels received from the data processing and transmitter unit **102**.

Additionally, the data processing and transmitter unit **102**, the primary receiver unit **104** and the data processing terminal **105** may each be configured for bi-directional wireless communication such that each of the data processing and transmitter unit **102**, the primary receiver unit **104** and the data processing terminal **105** may be configured to communicate (that is, transmit data to and receive data from) with each other via the wireless communication link **103**. More specifically, the data processing terminal **105** may in one embodiment be configured to receive data directly from the data processing and transmitter unit **102** via the communication link **103**, where the communication link **103**, as described above, may be configured for bi-directional communication.

In this embodiment, the data processing terminal **105** which may include an insulin pump, may be configured to receive the analyte signals from the data processing and transmitter unit **102**, and thus, incorporate the functions of the receiver **104** including data processing for managing the patient's insulin therapy and analyte monitoring. In one embodiment, the communication link **103** may include one or more of an RF communication protocol, an infrared communication protocol, a Bluetooth® enabled communication protocol, an 802.11x wireless communication protocol, or an equivalent wireless communication protocol which would allow secure, wireless communication of several units (for example, per HIPPA requirements) while avoiding potential data collision and interference.

FIG. **2** is a block diagram of the transmitter of the data monitoring and detection system shown in FIG. **1** in accordance with one embodiment of the present disclosure. Referring to the Figure, the data processing and transmitter unit **102** in one embodiment includes an analog interface **201** configured to communicate with the sensor unit **101** (FIG. **1**), a user input **202**, and a temperature measurement section **203**, each of which is operatively coupled to a transmitter processor **204** such as a central processing unit (CPU). As can be seen from FIG. **2**, there are provided four contacts, three of which are electrodes—work electrode (W) **210**, guard contact (G) **211**, reference electrode (R) **212**, and counter electrode (C) **213**, each operatively coupled to the analog interface **201** of the data processing and transmitter unit **102** for connection to the sensor unit **101** (FIG. **1**). In one embodiment, each of the work electrode (W) **210**, guard contact (G) **211**, reference electrode (R) **212**, and counter electrode (C) **213** may be made using a conductive material that is either printed or etched or ablated, for example, such as carbon which may be printed, or a metal such as a metal foil (e.g., gold) or the like, which may be etched or ablated or otherwise processed to provide one or more electrodes. Fewer or greater electrodes and/or contact may be provided in certain embodiments.

Further shown in FIG. **2** are a transmitter serial communication section **205** and an RF transmitter **206**, each of which is also operatively coupled to the transmitter processor **204**. Moreover, a power supply **207** such as a battery is also provided in the data processing and transmitter unit **102** to provide the necessary power for the data processing and transmitter unit **102**. In certain embodiments, the power supply **207** also provides the power necessary to power the sensor **101**. In other embodiments, the sensor is a self-powered sensor, such as the sensor described in U.S. patent application Ser. No. 12/393,921, incorporated herein by reference. Additionally, as can be seen from the Figure, clock **208** is provided to, among others, supply real time information to the transmitter processor **204**.

In one embodiment, a unidirectional input path is established from the sensor unit **101** (FIG. **1**) and/or manufacturing and testing equipment to the analog interface **201** of the data processing and transmitter unit **102**, while a unidirectional output is established from the output of the RF transmitter **206** of the data processing and transmitter unit **102** for transmission to the primary receiver unit **104**. In this manner, a data path is shown in FIG. **2** between the aforementioned unidirectional input and output via a dedicated link **209** from the analog interface **201** to serial communication section **205**, thereafter to the processor **204**, and then to the RF transmitter **206**. As such, in one embodiment, via the data path described above, the data processing and transmitter unit **102** is configured to transmit to the primary receiver unit **104** (FIG. **1**), via the communication link **103** (FIG. **1**), processed and encoded data signals received from the sensor unit **101** (FIG. **1**). Additionally, the unidirectional communication data path between the analog interface **201** and the RF transmitter **206** discussed above allows for the configuration of the data processing and transmitter unit **102** for operation upon completion of the manufacturing process as well as for direct communication for diagnostic and testing purposes.

As discussed above, the transmitter processor **204** is configured to transmit control signals to the various sections of the data processing and transmitter unit **102** during the operation of the data processing and transmitter unit **102**. In one embodiment, the transmitter processor **204** also includes a memory (not shown) for storing data such as the identification information for the data processing and transmitter unit **102**, as well as the data signals received from the sensor unit **101**. The stored information may be retrieved and processed for transmission to the primary receiver unit **104** under the control of the transmitter processor **204**. Furthermore, the power supply **207** may include a commercially available battery, which may be a rechargeable battery.

In certain embodiments, the data processing and transmitter unit **102** is also configured such that the power supply section **207** is capable of providing power to the transmitter for a minimum of about three months of continuous operation, e.g., after having been stored for about eighteen months such as stored in a low-power (non-operating) mode. In one embodiment, this may be achieved by the transmitter processor **204** operating in low power modes in the non-operating state, for example, drawing no more than approximately 1 μA of current. Indeed, in one embodiment, a step during the manufacturing process of the data processing and transmitter unit **102** may place the data processing and transmitter unit **102** in the lower power, non-operating state (i.e., post-manufacture sleep mode). In this manner, the shelf life of the data processing and transmitter unit **102** may be significantly improved. Moreover, as shown in FIG. **2**, while the power supply unit **207** is shown as coupled to the processor **204**, and as such, the processor **204** is configured to provide control of the power supply unit **207**, it should be noted that within the scope of the present disclosure, the power supply unit **207** is configured to provide the necessary power to each of the components of the data processing and transmitter unit **102** shown in FIG. **2**.

Referring back to FIG. **2**, the power supply section **207** of the data processing and transmitter unit **102** in one embodiment may include a rechargeable battery unit that may be recharged by a separate power supply recharging unit (for

example, provided in the receiver unit **104**) so that the data processing and transmitter unit **102** may be powered for a longer period of usage time. Moreover, in one embodiment, the data processing and transmitter unit **102** may be configured without a battery in the power supply section **207**, in which case the data processing and transmitter unit **102** may be configured to receive power from an external power supply source (for example, a battery) as discussed in further detail below.

Referring yet again to FIG. **2**, the temperature measurement section **203** of the data processing and transmitter unit **102** is configured to monitor the temperature of the skin near the sensor insertion site. The temperature reading is used to adjust the analyte readings obtained from the analog interface **201**. In certain embodiments, the RF transmitter **206** of the transmitter unit **102** may be configured for operation in the frequency band of approximately 315 MHz to approximately 322 MHz, for example, in the United States. In certain embodiments, the RF transmitter **206** of the transmitter unit **102** may be configured for operation in the frequency band of approximately 400 MHz to approximately 470 MHz. Further, in one embodiment, the RF transmitter **206** is configured to modulate the carrier frequency by performing Frequency Shift Keying and Manchester encoding. In one embodiment, the data transmission rate is about 19,200 symbols per second, with a minimum transmission range for communication with the primary receiver unit **104**.

Referring yet again to FIG. **2**, also shown is a leak detection circuit **214** coupled to the guard electrode (G) **211** and the processor **204** in the transmitter unit **102** of the data monitoring and management system **100**. The leak detection circuit **214** in accordance with one embodiment of the present disclosure may be configured to detect leakage current in the sensor unit **101** to determine whether the measured sensor data are corrupt or whether the measured data from the sensor **101** is accurate. Exemplary analyte systems that may be employed are described in, for example, U.S. Pat. Nos. 6,134,461, 6,175,752, 6,121,611, 6,560,471, 6,746,582, and elsewhere, the disclosure of each of which are incorporated by reference for all purposes.

FIG. **3** is a block diagram of the receiver/monitor unit of the data monitoring and management system shown in FIG. **1** in accordance with one embodiment of the present disclosure. Referring to FIG. **3**, the primary receiver unit **104** includes an analyte test strip, e.g., blood glucose test strip, interface **301**, an RF receiver **302**, an input **303**, a temperature monitor section **304**, and a clock **305**, each of which is operatively coupled to a receiver processor **307**. As can be further seen from the Figure, the primary receiver unit **104** also includes a power supply **306** operatively coupled to a power conversion and monitoring section **308**. Further, the power conversion and monitoring section **308** is also coupled to the receiver processor **307**. Moreover, also shown are a receiver serial communication section **309**, and an output **310**, each operatively coupled to the receiver processor **307**.

In one embodiment, the test strip interface **301** includes a glucose level testing portion to receive a manual insertion of a glucose test strip, and thereby determine and display the glucose level of the test strip on the output **310** of the primary receiver unit **104**. This manual testing of glucose may be used to calibrate the sensor unit **101** or otherwise. The RF receiver **302** is configured to communicate, via the communication link **103** (FIG. **1**) with the RF transmitter **206** of the transmitter unit **102**, to receive encoded data signals from the transmitter unit **102** for, among others, signal mixing, demodulation, and other data processing. The input **303** of the primary receiver unit **104** is configured to allow the user to enter information into the primary receiver unit **104** as needed. In one aspect, the input **303** may include one or more keys of a keypad, a touch-sensitive screen, or a voice-activated input command unit. The temperature monitor section **304** is configured to provide temperature information of the primary receiver unit **104** to the receiver processor **307**, while the clock **305** provides, among others, real time information to the receiver processor **307**.

Each of the various components of the primary receiver unit **104** shown in FIG. **3** is powered by the power supply **306** which, in one embodiment, includes a battery. Furthermore, the power conversion and monitoring section **308** is configured to monitor the power usage by the various components in the primary receiver unit **104** for effective power management and to alert the user, for example, in the event of power usage which renders the primary receiver unit **104** in sub-optimal operating conditions. An example of such sub-optimal operating condition may include, for example, operating the vibration output mode (as discussed below) for a period of time thus substantially draining the power supply **306** while the processor **307** (thus, the primary receiver unit **104**) is turned on. Moreover, the power conversion and monitoring section **308** may additionally be configured to include a reverse polarity protection circuit such as a field effect transistor (FET) configured as a battery activated switch.

The serial communication section **309** in the primary receiver unit **104** is configured to provide a bi-directional communication path from the testing and/or manufacturing equipment for, among others, initialization, testing, and configuration of the primary receiver unit **104**. Serial communication section **104** can also be used to upload data to a computer, such as time-stamped blood glucose data. The communication link with an external device (not shown) can be made, for example, by cable, infrared (IR) or RF link. The output **310** of the primary receiver unit **104** is configured to provide, among others, a graphical user interface (GUI) such as a liquid crystal display (LCD) for displaying information. Additionally, the output **310** may also include an integrated speaker for outputting audible signals as well as to provide vibration output as commonly found in handheld electronic devices, such as mobile telephones presently available. In a further embodiment, the primary receiver unit **104** also includes an electro-luminescent lamp configured to provide backlighting to the output **310** for output visual display in dark ambient surroundings.

Referring back to FIG. **3**, the primary receiver unit **104** in one embodiment may also include a storage section such as a programmable, non-volatile memory device as part of the processor **307**, or provided separately in the primary receiver unit **104**, operatively coupled to the processor **307**. The processor **307** may be configured to synchronize with a transmitter, e.g., using Manchester decoding or the like, as well as error detection and correction upon the encoded data signals received from the transmitter unit **102** via the communication link **103**.

Periodic calibration of the sensor unit **101** (FIG. **1**) of an analyte monitoring system **100**, in some embodiments, may be required for accurate calculation of a user's analyte level. Calibration, in some aspects, is used to ensure the analyte related data signals received at a transmitter unit **102** (and further transmitted to a receiver unit, such as the primary receiver unit **104**) are correctly converted to corresponding analyte levels. Exemplary calibration protocols, routines and techniques are described, for example, in U.S. Pat. No.

7,299,082, U.S. patent application Ser. No. 11/537,991 filed Oct. 2, 2006, U.S. patent application Ser. No. 12/363,706 filed Jan. 30, 2009, and in U.S. patent application Ser. No. 12/363,712 filed Jan. 30, 2009, the disclosures of each of which are herein incorporated by reference for all purposes.

There are time periods where the sensor characteristics or the user's physiological condition renders the condition unsuitable for a sensor calibration event. For example, the sensor may be configured for periodic calibration, such as, after 2 hours after insertion, 10 hours after insertion, 12 hours after insertion, 24 hours after insertion, 48 hours after insertion, or 72 hours after insertion, or one or more combinations thereof. If a predetermined calibration event is triggered but a successful calibration does not result, after a certain time period (for example, a predetermined grace period during which to calibrate), the receiver unit may no longer display the monitored and processed glucose information.

Other conditions may also result in rendering the condition unsuitable for sensor calibration including, but not limited to, detection of a failure mode of a sensor, sensor data values being outside a predetermined range, rate of change of sensor data values being above a predetermined threshold, a temperature measurement outside a predetermined range, or any combination thereof.

FIG. **4** illustrates analyte sensor data processing in accordance with one embodiment of the present disclosure. Referring to FIG. **4**, a transmitter unit **102** (FIG. **1**) in operational contact with a sensor **101** receives analyte related sensor data (**410**) corresponding to a measured level of a biological fluid of the user. For example, the sensor **101** (FIG. **1**) may be an analyte sensor configured to detect and measure the concentration of an analyte in a biological fluid, such as the blood of a user. Upon receipt of the analyte related sensor data, the transmitter unit **102** further transmits the analyte related sensor data to a receiver unit, such as primary receiver unit **104** (FIG. **1**). It is to be noted that the reference to analyte related sensor data herein and throughout specification includes, for example, current signal received from the analyte sensor, as well as the current signal which has undergone predetermined data processing routines including, for example, filtering, clipping, digitizing, and/or encoding, and/or any other further processing and/or conditioning. In one aspect, the primary receiver unit **104** determines whether the sensor is calibrated and is in acceptable condition for further data processing (**420**). When sensor related conditions are unsuitable for calibration, the analyte related sensor data is stored (**450**) in a memory, for example, in the primary receiver unit **104**.

Referring still to FIG. **4**, if the sensor data is calibrated and in condition for further data processing, the sensor data is further processed (**430**) and output for display (**440**) to a user on a display unit **310** (FIG. **3**) of the primary receiver unit **104**. In one embodiment, the display of the processed sensor data comprises a graphical representation of the processed sensor data. In other embodiments, the processed sensor data may be displayed as numerical values, visual indicators, auditory outputs, or combinations thereof. In one aspect, the processing routine described in conjunction with FIG. **4** is performed or executed in, for example, the transmitter unit **102**, the secondary receiver unit **106** (FIG. **1**), or the data processing terminal **105** (FIG. **1**) of the analyte monitoring system **100** (FIG. **1**) based on analyte data received from the sensor **101**.

FIG. **5** illustrates analyte sensor data processing in accordance with one embodiment of the present disclosure. Referring to FIG. **5**, in one embodiment, transmitter unit **102** (FIG. **1**) receives analyte related sensor data (**510**) from a sensor **101** (FIG. **1**). Upon receipt of the analyte related sensor data, the transmitter unit **102** transmits the analyte related sensor data (or processed, digitized, and/or filtered signals) to the primary receiver unit **104** (FIG. **1**). The primary receiver unit **104** is configured to determine if calibration of the sensor data is suitable—that is, whether the conditions necessary for sensor calibration are met (**520**).

Still referring to FIG. **5**, if it is determined that the sensor **101** is not calibrated or calibration condition for calibrating the sensor **101** is not met, in one aspect, the primary receiver unit stores the analyte related sensor data in a memory (**550**) and temporarily disables display of the sensor data (**560**) to the user (for example, if a calibration event has not occurred and the calibration grace period has expired). On the other hand, if the sensor **101** is calibrated, the sensor data is processed (**530**) by the primary receiver unit **104** and the processed sensor data is output to the user (**540**), for example via a display unit **310** (FIG. **3**) of the primary receiver unit **104**. In one aspect, the processing routine described in conjunction with FIG. **5** is performed or executed in, for example, the transmitter unit **102**, the secondary receiver unit **106**, or the data processing terminal **105** of the analyte monitoring system **100** based on analyte data received from the sensor **101** (FIG. **1**).

In one aspect, the display or output of processed sensor data may be disabled if a required calibration event is unsuccessful over a permitted time period (for example, including a predetermined grace period measured from the scheduled calibration). Thereafter, upon successful calibration, the system resumes display of the processed and calibrated analyte sensor data. However, there may be a time period or a gap in the output display during which the necessary calibration did not occur in a timely manner. For example, as shown in FIG. **7**A, if sensor data is displayed as a graphical display, during time periods where the analyte monitoring system **100** was not properly calibrated, analyte related sensor data was not processed and/or displayed, resulting in a gap in the graphical display.

FIG. **6** illustrates backfilling gaps in sensor data in one embodiment of the present disclosure. Referring to FIG. **6**, when a scheduled calibration event fails and the associated grace period for calibration does not occur, the output display of the processed, calibrated sensor data is disabled (**610**). Referring to FIG. **6**, once the system recovers after a successful calibration event, the calibrated sensor data is once again displayed (and stored). Furthermore, in one aspect, based on the parameters associated with the successful calibration, the previously unprocessed data during the display time out period may be retrieved (for example, the previously stored analyte related sensor signals during this period) and processed using calibration data, such as a sensitivity ratio for conversion of analyte related sensor data to analyte levels. For example, in one aspect, the subset of analyte related sensor data that were previously unprocessed or uncalibrated due to unsuccessful contemporaneous calibration may be processed using, for example, calibration data such as the sensitivity ratio determined from the most recent successful calibration event, and thereafter, the gap in output display illustrating the processed and calibrated signals may be filled.

In one aspect, once successful calibration of the sensor data occurs, the calibration parameters from this calibration event may be used to process the sensor data during the period of disabled output or display (**620**). Upon successful processing of the sensor data during the period of disabled output, the processed sensor data during this time period is

backfilled, or the gap in the processed continuous sensor data are filled in the display (**630**). By way of an example, FIGS. **7**A and **7**B illustrate the replacement of a period of unprocessed sensor data with corresponding backfilled processed sensor data, in one embodiment.

In one embodiment, the backfilled processed sensor data is displayed immediately upon calculation. In another embodiment, the backfilled processed sensor data is not displayed immediately, but rather, after waiting a predetermined period of time. The backfilled processed sensor data may not be displayed immediately to avoid possible unnecessary or incorrect action by a user in response to the backfilled processed sensor data. In this manner, in one aspect, the user or a healthcare provider may be provided with a continuous set of analyte data from the analyte monitoring system without any gaps in the processed signals for further analysis and/or therapy management.

In this manner, in accordance with the embodiments of the present disclosure, gaps in monitored analyte levels using an analyte monitoring system due to, for example, inability to promptly calibrate the sensor, system malfunction, sensor dislodging, signal errors associated with the sensor, transmitter unit, receiver unit, and the like, or any other variables or parameters that result in the inability of the analyte monitoring system to display or output the real-time monitored analyte level, may be retrospectively filled or reprocessed so that the data gap is closed and the continuously monitored analyte level does not have any or substantially missing data. That is, in embodiments of the present disclosure, upon correction or rectification of the condition or conditions/parameters which resulted in the analyte monitoring system disabling the output results associated with the monitored real time analyte levels, the parameters associated with the correction or rectification may be used to retrospectively correct or process data or signals so that the missing gaps in analyte related data may be processed and backfilled.

In this manner, advantageously, in aspects of the present disclosure, additional robustness may be provided to the user and/or the healthcare provider to improve therapy or health management decisions.

In one embodiment, a method may include receiving sensor data from an analyte sensor of a sensor monitoring system, processing the received sensor data with time corresponding calibration data, outputting the processed sensor data, detecting one or more adverse conditions associated with the sensor monitoring system, disabling the output of the sensor data during an adverse condition time period, determining that the one or more detected adverse conditions is no longer present in the sensor monitoring system, retrieving the sensor data during the adverse condition time period, processing the retrieved sensor data during the adverse condition time period, and outputting the processed retrieved sensor data.

In one aspect, outputting the processed sensor data may include displaying the sensor data in one or more of a graphical, numerical, pictorial, audible, vibratory, or one or more combinations thereof.

The one or more detected adverse conditions may include one or more of a sensor instability condition, a calibration failure condition, or a monitoring system failure condition.

The sensor instability condition may include one or more of an early signal attenuation condition of the sensor, sensor misposition error, sensor communication error, temperature measurement outside a predetermined range, or a combination thereof.

The calibration failure condition may include one or more of an analyte level exceeding a predetermined threshold, a rate of change of analyte level exceeding a predetermined threshold, a signal error associated with the reference data, a data unavailability condition, or a combination thereof.

Furthermore, the method may include storing the processed sensor data with the associated time information based on the analyte level detection time by the sensor.

In another embodiment, a method may include detecting a condition unsuitable for calibration of an analyte sensor for a predetermined time period, disabling output of information associated with the analyte sensor, determining a successful calibration of the analyte sensor, retrieving one or more parameters associated with the successful calibration, processing sensor data during the time period of disabled output of information with the one or more parameters associated with the successful calibration, and displaying the processed sensor data for the time period of disabled information output.

The sensor data may be analyte concentration data.

The analyte concentration data may include blood glucose concentration data.

The sensor data may be processed in substantially real-time.

The condition unsuitable for calibration may include one or more of a failure mode of a sensor, sensor data outside a predetermined acceptable range, a rate of change of sensor data above a predetermined level, a requirement for calibration of a sensor, a temperature measurement outside a predetermined range, or any combination thereof.

The processed sensor data for the time period of disabled information output may be displayed substantially immediately upon processing.

The processed sensor data for the time period of disabled information output may be displayed only after waiting a predetermined period of time.

In another embodiment, an apparatus may include an interface configured to receive sensor data, a first memory configured to store the received sensor data, a processor coupled to the memory and configured to process the stored sensor data, a second memory coupled to the processor and configured to store the processed sensor data, and a display unit coupled to the second memory and configured to display the processed sensor data, wherein the processor is further configured to detect a condition unsuitable for calibration of a sensor for a predetermined time period, disable display of processed sensor data, determine a successful calibration of the sensor, retrieve one or more parameters associated with the successful calibration, process the sensor data during the time period of disabled display of sensor data with the one or more parameters associated with the successful calibration, and display the processed sensor data for the time period of disabled information output.

The sensor may be an analyte sensor.

The analyte sensor may be a glucose sensor.

The sensor data may correspond to analyte concentration data.

The analyte concentration data may include blood glucose concentration data.

Furthermore, the apparatus may be configured to process and display the sensor data substantially in real-time.

In one aspect, the condition unsuitable for calibration may include one or more of a failure mode of a sensor, sensor data outside a predetermined acceptable range, a rate of change of sensor data above a predetermined level, a

requirement for calibration of a sensor, a temperature measurement outside a predetermined range, or any combination thereof.

The display unit may be configured to display the processed sensor data for the time period of disabled information output substantially immediately upon processing the sensor data.

The display unit may be configured to display the processed sensor data for the time period of disabled information output only after waiting a predetermined period of time.

Various other modifications and alterations in the structure and method of operation of this invention will be apparent to those skilled in the art without departing from the scope and spirit of the invention. Although the invention has been described in connection with specific preferred embodiments, it should be understood that the invention as claimed should not be unduly limited to such specific embodiments. It is intended that the following claims define the scope of the present disclosure and that structures and methods within the scope of these claims and their equivalents be covered thereby.

What is claimed is:

1. A glucose monitoring system for backfilling data gaps that occur while a user monitors glucose levels, the glucose monitoring system comprising:

a glucose sensor, a portion of which is configured to be positioned under skin of the user, wherein the glucose sensor is configured to sample a biological fluid of the user to provide sensor data;

a data processing and transmitter unit coupled to the glucose sensor, the data processing and transmitter unit comprising a power supply, a processor of the data processing and transmitter unit, memory of the data processing and transmitter unit, and a radio frequency transceiver of the data processing and transmitter unit, wherein the data processing and transmitter unit is configured to:

receive the sensor data from the glucose sensor and store the sensor data in the memory of the data processing and transmitter unit;

process the sensor data using calibration data to provide processed sensor data, wherein the calibration data comprises data associated with a sensitivity of the glucose sensor, and wherein the processed sensor data is stored in the memory of the data processing and transmitter unit; and

transmit the processed sensor data over a Bluetooth wireless communication link using the radio frequency transceiver of the data processing and transmitter unit; and

a receiver unit comprising a processor of the receiver unit, memory of the receiver unit, a radio frequency transceiver of the receiver unit, an antenna, and a display, wherein the receiver unit is configured to:

receive, using the antenna and the radio frequency transceiver of the receiver unit, the processed sensor data over the Bluetooth wireless communication link,

output to the display of the receiver unit, a numerical value representing the processed sensor data,

output to the display of the receiver unit, a first line graph that is a substantially continuous depiction of the processed sensor data over time,

wherein the glucose monitoring system is configured to detect an adverse condition, wherein the adverse condition results in the receiver unit displaying a data gap such that the first line graph displayed on the receiver unit has an end corresponding to a time associated with a start of the adverse condition;

wherein, during a time period corresponding to the adverse condition, sensor data, processed sensor data, or both, are stored in the memory of the data processing and transmitter unit;

wherein the receiver unit is configured to output to the display, after the adverse condition is corrected, processed sensor data for the time period corresponding to the adverse condition such that the data gap is backfilled, and

wherein the processed sensor data for the time period corresponding to the adverse condition that is outputted to the display after the adverse condition is corrected comprises a second line graph having a first end corresponding to the time associated with the start of the adverse condition and a second end corresponding to a time associated with an end of the adverse condition.

2. The glucose monitoring system of claim **1**, wherein the first line graph and the second line graph are outputted to a same graph comprising a first axis having a time unit of measurement and a second axis having a glucose concentration unit of measurement.

3. The glucose monitoring system of claim **1**, wherein the adverse condition comprises a sensor communication error.

4. The glucose monitoring system of claim **1**, wherein the adverse condition comprises a signal error associated with the glucose sensor.

5. The glucose monitoring system of claim **1**, wherein the adverse condition comprises a signal error associated with the data processing and transmitter unit.

6. The glucose monitoring system of claim **1**, wherein the adverse condition comprises a signal error associated with the receiver unit.

7. The glucose monitoring system of claim **1**, wherein the adverse condition comprises a system malfunction associated with the data processing and transmitter unit or a system malfunction associated with the receiver unit.

8. The glucose monitoring system of claim **1**, wherein the adverse condition comprises an inability of the receiver unit to display or output at least a portion of the the first line graph.

9. The glucose monitoring system of claim **1**, wherein the adverse condition comprises a sensor instability condition.

10. The glucose monitoring system of claim **1**, wherein the adverse condition comprises a calibration failure condition.

11. The glucose monitoring system of claim **1**, wherein the adverse condition comprises a monitoring system failure condition.

12. The glucose monitoring system of claim **1**, wherein the glucose sensor comprises a working electrode and a counter electrode.

13. The glucose monitoring system of claim **1**, wherein the adverse condition comprises a sensor misposition error.

14. The glucose monitoring system of claim **1**, wherein the on body unit further comprises a temperature sensor, and wherein the adverse condition comprises a temperature measurement outside a predetermined range.

15. The glucose monitoring system of claim **1**, wherein the adverse condition comprises an analyte level exceeding a predetermined threshold.

16. The glucose monitoring system of claim **1**, wherein the adverse condition comprises a rate of change of an analyte level exceeding a predetermined threshold.

17. The glucose monitoring system of claim **1**, wherein the adverse condition comprises a data unavailability condition.

18. The glucose monitoring system of claim **1**, wherein the receiver unit is further configured to display the second line graph immediately after the correction of the adverse condition.

19. The glucose monitoring system of claim **1**, wherein the receiver unit is further configured to wait a predetermined period of time after the correction of the adverse condition before displaying the second line graph.

20. The glucose monitoring system of claim **1**, wherein the data processing and transmitter unit, the receiver unit, or both is further configured to store time information associated with the adverse condition.

21. The glucose monitoring system of claim **1**, wherein the data processing and transmitter unit and at least a portion of the glucose sensor are disposed within a single integrated housing.

22. The glucose monitoring system of claim **1**, wherein the receiver unit comprises a mobile phone.

23. The glucose monitoring system of claim **1**, wherein the time period associated with the adverse condition comprises at least one hour.

24. The glucose monitoring system of claim **1**, wherein the glucose monitoring system is further configured for periodic calibration, and wherein the calibration data is based at least in part on glucose reference data received after the portion of the glucose sensor has been positioned under the skin of the user.

25. The glucose monitoring system of claim **24**, wherein the adverse condition comprises a signal error associated with the blood glucose reference data.

26. The glucose monitoring system of claim **24**, wherein the glucose monitoring system is further configured for calibration twelve hours after the portion of the glucose sensor has been positioned under the skin of the user.

27. The glucose monitoring system of claim **1**, wherein the data processing and transmitter unit is configured to transition from a low-power mode to an operating mode, and wherein the data processing and transmitter unit consumes more power from the power supply in the operating mode than in the low-power mode.

28. The glucose monitoring system of claim **1**, wherein the power supply of the data processing and transmitter unit is configured to provide power for about three months of continuous operation.

29. The glucose monitoring system of claim **1**, further comprising a secondary receiver unit, wherein the secondary receiver unit is configured to include a limited number of functions as compared with the receiver unit, wherein the secondary receiver unit is configured to receive processed sensor data from the data processing and transmitter unit, and wherein the secondary receiver unit is a watch.

30. The glucose monitoring system of claim **1**, wherein the glucose sensor is further configured to continuously sample the biological fluid of the user to provide the sensor data.

* * * * *