UNITED STATES PATENT AND TRADEMARK OFFICE

UNITED STATES DEPARTMENT OF COMMERCE
United States Patent and Trademark Office
Address: COMMISSIONER FOR PATENTS
P.O. Box 1450
Alexandria, Virginia 22313-1450
www.uspto.gov

APPLICATION NO.	ISSUE DATE	PATENT NO.	ATTORNEY DOCKET NO.	CONFIRMATION NO.
15/061,774	02/05/2019	10194844	A0130.0090.C1C1	5923

95508 7590 01/16/2019

One LLP
4000 MacArthur Blvd.
East Tower, Suite 500
Newport Beach, CA 92660

ISSUE NOTIFICATION

The projected patent number and issue date are specified above.

Determination of Patent Term Adjustment under 35 U.S.C. 154 (b)
(application filed on or after May 29, 2000)

The Patent Term Adjustment is 378 day(s). Any patent to issue from the above-identified application will include an indication of the adjustment on the front page.

If a Continued Prosecution Application (CPA) was filed in the above-identified application, the filing date that determines Patent Term Adjustment is the filing date of the most recent CPA.

Applicant will be able to obtain more detailed information by accessing the Patent Application Information Retrieval (PAIR) WEB site (http://pair.uspto.gov).

Any questions regarding the Patent Term Extension or Adjustment determination should be directed to the Office of Patent Legal Administration at (571)-272-7702. Questions relating to issue and publication fee payments should be directed to the Application Assistance Unit (AAU) of the Office of Data Management (ODM) at (571)-272-4200.

APPLICANT(s) (Please see PAIR WEB site http://pair.uspto.gov for additional applicants):

Wesley Scott Harper, Alameda, CA;
ABBOTT DIABETES CARE INC., Alameda, CA;

The United States represents the largest, most dynamic marketplace in the world and is an unparalleled location for business investment, innovation, and commercialization of new technologies. The USA offers tremendous resources and advantages for those who invest and manufacture goods here. Through SelectUSA, our nation works to encourage and facilitate business investment. To learn more about why the USA is the best country in the world to develop technology, manufacture products, and grow your business, visit SelectUSA.gov.

DEXCOM
EXHIBIT 1005

PART B - FEE(S) TRANSMITTAL

Complete and send this form, together with applicable fee(s), to: Mail Mail Stop ISSUE FEE
Commissioner for Patents
P.O. Box 1450
Alexandria, Virginia 22313-1450
or Fax (571)-273-2885

INSTRUCTIONS: This form should be used for transmitting the ISSUE FEE and PUBLICATION FEE (if required). Blocks 1 through 5 should be completed where appropriate. All further correspondence including the Patent, advance orders and notification of maintenance fees will be mailed to the current correspondence address as indicated unless corrected below or directed otherwise in Block 1, by (a) specifying a new correspondence address; and/or (b) indicating a separate "FEE ADDRESS" for maintenance fee notifications.

CURRENT CORRESPONDENCE ADDRESS (Note: Use Block 1 for any change of address)

95508 7590 09/25/2018
One LLP
4000 MacArthur Blvd.
East Tower, Suite 500
Newport Beach, CA 92660

Note: A certificate of mailing can only be used for domestic mailings of the Fee(s) Transmittal. This certificate cannot be used for any other accompanying papers. Each additional paper, such as an assignment or formal drawing, must have its own certificate of mailing or transmission.

Certificate of Mailing or Transmission

I hereby certify that this Fee(s) Transmittal is being deposited with the United States Postal Service with sufficient postage for first class mail in an envelope addressed to the Mail Stop ISSUE FEE address above, or being facsimile transmitted to the USPTO (571) 273-2885, on the date indicated below.

(Depositor's name)
(Signature)
(Date)

APPLICATION NO.	FILING DATE	FIRST NAMED INVENTOR	ATTORNEY DOCKET NO.	CONFIRMATION NO.
15/061,774	03/04/2016	Wesley Scott Harper	A0130.0090.C1C1	5923

TITLE OF INVENTION: METHODS AND SYSTEMS FOR EARLY SIGNAL ATTENUATION DETECTION AND PROCESSING

APPLN. TYPE	ENTITY STATUS	ISSUE FEE DUE	PUBLICATION FEE DUE	PREV. PAID ISSUE FEE	TOTAL FEE(S) DUE	DATE DUE
nonprovisional	UNDISCOUNTED	$1000	$0.00	$0.00	$1000	12/26/2018

EXAMINER	ART UNIT	CLASS-SUBCLASS
LIN, JERRY	1631	702-019000

1. Change of correspondence address or indication of "Fee Address" (37 CFR 1.363).

❑ Change of correspondence address (or Change of Correspondence Address form PTO/SB/122) attached.

❑ "Fee Address" indication (or "Fee Address" Indication form PTO/SB/47; Rev 03-02 or more recent) attached. **Use of a Customer Number is required.**

2. For printing on the patent front page, list
(1) The names of up to 3 registered patent attorneys or agents OR, alternatively,
(2) The name of a single firm (having as a member a registered attorney or agent) and the names of up to 2 registered patent attorneys or agents. If no name is listed, no name will be printed.

1 ONE LLP
2
3

3. ASSIGNEE NAME AND RESIDENCE DATA TO BE PRINTED ON THE PATENT (print or type)

PLEASE NOTE: Unless an assignee is identified below, no assignee data will appear on the patent. If an assignee is identified below, the document has been filed for recordation as set forth in 37 CFR 3.11. Completion of this form is NOT a substitute for filing an assignment.

(A) NAME OF ASSIGNEE: ABBOTT DIABETES CARE INC.

(B) RESIDENCE: (CITY and STATE OR COUNTRY): Alameda, CA

Please check the appropriate assignee category or categories (will not be printed on the patent) : ❑ Individual ☒ Corporation or other private group entity ❑ Government

4a. The following fee(s) are submitted:

☒ Issue Fee

❑ Publication Fee (No small entity discount permitted)

❑ Advance Order - # of Copies _____

4b. Payment of Fee(s): **(Please first reapply any previously paid issue fee shown above)**

❑ A check is enclosed.

☒ Payment by credit card. Form PTO-2038 is attached.

❑ The director is hereby authorized to charge the required fee(s), any deficiency, or credits any overpayment, to Deposit Account Number _____ (enclose an extra copy of this form).

5. **Change in Entity Status** (from status indicated above)

❑ Applicant certifying micro entity status. See 37 CFR 1.29

❑ Applicant asserting small entity status. See 37 CFR 1.27

❑ Applicant changing to regular undiscounted fee status.

NOTE: Absent a valid certification of Micro Entity Status (see forms PTO/SB/15A and 15B), issue fee payment in the micro entity amount will not be accepted at the risk of application abandonment.
NOTE: If the application was previously under micro entity status, checking this box will be taken to be a notification of loss of entitlement to micro entity status.
NOTE: Checking this box will be taken to be a notification of loss of entitlement to small or micro entity status, as applicable.

NOTE: This form must be signed in accordance with 37 CFR 1.31 and 1.33. See 37 CFR 1.4 for signature requirements and certifications.

Authorized Signature /Mark Stirrat/ Date December 20, 2018

Typed or printed name Mark Stirrat Registration No. 50,756

Electronic Patent Application Fee Transmittal

Application Number:	15061774
Filing Date:	04-Mar-2016
Title of Invention:	METHODS AND SYSTEMS FOR EARLY SIGNAL ATTENUATION DETECTION AND PROCESSING
First Named Inventor/Applicant Name:	Wesley Scott Harper
Filer:	Mark Andrew Stirrat/Alana Fredericks
Attorney Docket Number:	A0130.0090.C1C1

Filed as Large Entity

Filing Fees for Utility under 35 USC 111(a)

Description	Fee Code	Quantity	Amount	Sub-Total in USD($)
Basic Filing:				
Pages:				
Claims:				
Miscellaneous-Filing:				
Petition:				
Patent-Appeals-and-Interference:				
Post-Allowance-and-Post-Issuance:				
UTILITY APPL ISSUE FEE	1501	1	1000	1000

Description	Fee Code	Quantity	Amount	Sub-Total in USD($)
Extension-of-Time:				
Miscellaneous:				
			Total in USD ($)	**1000**

Electronic Acknowledgement Receipt

EFS ID:	34656315
Application Number:	15061774
International Application Number:	
Confirmation Number:	5923
Title of Invention:	METHODS AND SYSTEMS FOR EARLY SIGNAL ATTENUATION DETECTION AND PROCESSING
First Named Inventor/Applicant Name:	Wesley Scott Harper
Customer Number:	95508
Filer:	Mark Andrew Stirrat/Alana Fredericks
Filer Authorized By:	Mark Andrew Stirrat
Attorney Docket Number:	A0130.0090.C1C1
Receipt Date:	20-DEC-2018
Filing Date:	04-MAR-2016
Time Stamp:	14:51:05
Application Type:	Utility under 35 USC 111(a)

Payment information:

Submitted with Payment	yes
Payment Type	CARD
Payment was successfully received in RAM	$1000
RAM confirmation Number	122118INTEFSW14512600
Deposit Account	
Authorized User	

The Director of the USPTO is hereby authorized to charge indicated fees and credit any overpayment as follows:

File Listing:

Document Number	Document Description	File Name	File Size(Bytes)/ Message Digest	Multi Part /.zip	Pages (if appl.)
1	Issue Fee Payment (PTO-85B)	9368USC2_A0130_0090_C1C1_Issue_Fee_Transmittal.pdf	150102 0b08b562db06796f6f2473ddb80a9b96cfbe8214	no	1
Warnings:					
Information:					
2	Fee Worksheet (SB06)	fee-info.pdf	30313 db293628e386756c7761de1d2ab8b79fa96e57f8	no	2
Warnings:					
Information:					
		Total Files Size (in bytes):	180415		

This Acknowledgement Receipt evidences receipt on the noted date by the USPTO of the indicated documents, characterized by the applicant, and including page counts, where applicable. It serves as evidence of receipt similar to a Post Card, as described in MPEP 503.

New Applications Under 35 U.S.C. 111
If a new application is being filed and the application includes the necessary components for a filing date (see 37 CFR 1.53(b)-(d) and MPEP 506), a Filing Receipt (37 CFR 1.54) will be issued in due course and the date shown on this Acknowledgement Receipt will establish the filing date of the application.
National Stage of an International Application under 35 U.S.C. 371
If a timely submission to enter the national stage of an international application is compliant with the conditions of 35 U.S.C. 371 and other applicable requirements a Form PCT/DO/EO/903 indicating acceptance of the application as a national stage submission under 35 U.S.C. 371 will be issued in addition to the Filing Receipt, in due course.
New International Application Filed with the USPTO as a Receiving Office
If a new international application is being filed and the international application includes the necessary components for an international filing date (see PCT Article 11 and MPEP 1810), a Notification of the International Application Number and of the International Filing Date (Form PCT/RO/105) will be issued in due course, subject to prescriptions concerning national security, and the date shown on this Acknowledgement Receipt will establish the international filing date of the application.

UNITED STATES PATENT AND TRADEMARK OFFICE

UNITED STATES DEPARTMENT OF COMMERCE
United States Patent and Trademark Office
Address: COMMISSIONER FOR PATENTS
P.O. Box 1450
Alexandria, Virginia 22313-1450
www.uspto.gov

NOTICE OF ALLOWANCE AND FEE(S) DUE

95508 7590 09/25/2018
One LLP
4000 MacArthur Blvd.
East Tower, Suite 500
Newport Beach, CA 92660

EXAMINER
LIN, JERRY

ART UNIT	PAPER NUMBER
1631	

DATE MAILED: 09/25/2018

APPLICATION NO.	FILING DATE	FIRST NAMED INVENTOR	ATTORNEY DOCKET NO.	CONFIRMATION NO.
15/061,774	03/04/2016	Wesley Scott Harper	A0130.0090.C1C1	5923

TITLE OF INVENTION: METHODS AND SYSTEMS FOR EARLY SIGNAL ATTENUATION DETECTION AND PROCESSING

APPLN. TYPE	ENTITY STATUS	ISSUE FEE DUE	PUBLICATION FEE DUE	PREV. PAID ISSUE FEE	TOTAL FEE(S) DUE	DATE DUE
nonprovisional	UNDISCOUNTED	$1000	$0.00	$0.00	$1000	12/26/2018

THE APPLICATION IDENTIFIED ABOVE HAS BEEN EXAMINED AND IS ALLOWED FOR ISSUANCE AS A PATENT. PROSECUTION ON THE MERITS IS CLOSED. THIS NOTICE OF ALLOWANCE IS NOT A GRANT OF PATENT RIGHTS. THIS APPLICATION IS SUBJECT TO WITHDRAWAL FROM ISSUE AT THE INITIATIVE OF THE OFFICE OR UPON PETITION BY THE APPLICANT. SEE 37 CFR 1.313 AND MPEP 1308.

THE ISSUE FEE AND PUBLICATION FEE (IF REQUIRED) MUST BE PAID WITHIN THREE MONTHS FROM THE MAILING DATE OF THIS NOTICE OR THIS APPLICATION SHALL BE REGARDED AS ABANDONED. THIS STATUTORY PERIOD CANNOT BE EXTENDED. SEE 35 U.S.C. 151. THE ISSUE FEE DUE INDICATED ABOVE DOES NOT REFLECT A CREDIT FOR ANY PREVIOUSLY PAID ISSUE FEE IN THIS APPLICATION. IF AN ISSUE FEE HAS PREVIOUSLY BEEN PAID IN THIS APPLICATION (AS SHOWN ABOVE), THE RETURN OF PART B OF THIS FORM WILL BE CONSIDERED A REQUEST TO REAPPLY THE PREVIOUSLY PAID ISSUE FEE TOWARD THE ISSUE FEE NOW DUE.

HOW TO REPLY TO THIS NOTICE:

I. Review the ENTITY STATUS shown above. If the ENTITY STATUS is shown as SMALL or MICRO, verify whether entitlement to that entity status still applies.

If the ENTITY STATUS is the same as shown above, pay the TOTAL FEE(S) DUE shown above.

If the ENTITY STATUS is changed from that shown above, on PART B - FEE(S) TRANSMITTAL, complete section number 5 titled "Change in Entity Status (from status indicated above)".

For purposes of this notice, small entity fees are 1/2 the amount of undiscounted fees, and micro entity fees are 1/2 the amount of small entity fees.

II. PART B - FEE(S) TRANSMITTAL, or its equivalent, must be completed and returned to the United States Patent and Trademark Office (USPTO) with your ISSUE FEE and PUBLICATION FEE (if required). If you are charging the fee(s) to your deposit account, section "4b" of Part B - Fee(s) Transmittal should be completed and an extra copy of the form should be submitted. If an equivalent of Part B is filed, a request to reapply a previously paid issue fee must be clearly made, and delays in processing may occur due to the difficulty in recognizing the paper as an equivalent of Part B.

III. All communications regarding this application must give the application number. Please direct all communications prior to issuance to Mail Stop ISSUE FEE unless advised to the contrary.

IMPORTANT REMINDER: Utility patents issuing on applications filed on or after Dec. 12, 1980 may require payment of maintenance fees. It is patentee's responsibility to ensure timely payment of maintenance fees when due.

PART B - FEE(S) TRANSMITTAL

Complete and send this form, together with applicable fee(s), to: Mail Mail Stop ISSUE FEE
Commissioner for Patents
P.O. Box 1450
Alexandria, Virginia 22313-1450
or Fax (571)-273-2885

INSTRUCTIONS: This form should be used for transmitting the ISSUE FEE and PUBLICATION FEE (if required). Blocks 1 through 5 should be completed where appropriate. All further correspondence including the Patent, advance orders and notification of maintenance fees will be mailed to the current correspondence address as indicated unless corrected below or directed otherwise in Block 1, by (a) specifying a new correspondence address; and/or (b) indicating a separate "FEE ADDRESS" for maintenance fee notifications.

CURRENT CORRESPONDENCE ADDRESS (Note: Use Block 1 for any change of address)

95508 7590 09/25/2018
One LLP
4000 MacArthur Blvd.
East Tower, Suite 500
Newport Beach, CA 92660

Note: A certificate of mailing can only be used for domestic mailings of the Fee(s) Transmittal. This certificate cannot be used for any other accompanying papers. Each additional paper, such as an assignment or formal drawing, must have its own certificate of mailing or transmission.

Certificate of Mailing or Transmission

I hereby certify that this Fee(s) Transmittal is being deposited with the United States Postal Service with sufficient postage for first class mail in an envelope addressed to the Mail Stop ISSUE FEE address above, or being facsimile transmitted to the USPTO (571) 273-2885, on the date indicated below.

(Depositor's name)
(Signature)
(Date)

APPLICATION NO.	FILING DATE	FIRST NAMED INVENTOR	ATTORNEY DOCKET NO.	CONFIRMATION NO.
15/061,774	03/04/2016	Wesley Scott Harper	A0130.0090.C1C1	5923

TITLE OF INVENTION: METHODS AND SYSTEMS FOR EARLY SIGNAL ATTENUATION DETECTION AND PROCESSING

APPLN. TYPE	ENTITY STATUS	ISSUE FEE DUE	PUBLICATION FEE DUE	PREV. PAID ISSUE FEE	TOTAL FEE(S) DUE	DATE DUE
nonprovisional	UNDISCOUNTED	$1000	$0.00	$0.00	$1000	12/26/2018

EXAMINER	ART UNIT	CLASS-SUBCLASS
LIN, JERRY	1631	702-019000

1. Change of correspondence address or indication of "Fee Address" (37 CFR 1.363).

❑ Change of correspondence address (or Change of Correspondence Address form PTO/SB/122) attached.

❑ "Fee Address" indication (or "Fee Address" Indication form PTO/SB/47; Rev 03-02 or more recent) attached. **Use of a Customer Number is required.**

2. For printing on the patent front page, list
(1) The names of up to 3 registered patent attorneys or agents OR, alternatively,
(2) The name of a single firm (having as a member a registered attorney or agent) and the names of up to 2 registered patent attorneys or agents. If no name is listed, no name will be printed.

1 _____
2 _____
3 _____

3. ASSIGNEE NAME AND RESIDENCE DATA TO BE PRINTED ON THE PATENT (print or type)

PLEASE NOTE: Unless an assignee is identified below, no assignee data will appear on the patent. If an assignee is identified below, the document has been filed for recordation as set forth in 37 CFR 3.11. Completion of this form is NOT a substitute for filing an assignment.

(A) NAME OF ASSIGNEE (B) RESIDENCE: (CITY and STATE OR COUNTRY)

Please check the appropriate assignee category or categories (will not be printed on the patent) : ❑ Individual ❑ Corporation or other private group entity ❑ Government

4a. The following fee(s) are submitted:

❑ Issue Fee

❑ Publication Fee (No small entity discount permitted)

❑ Advance Order - # of Copies _____

4b. Payment of Fee(s): **(Please first reapply any previously paid issue fee shown above)**

❑ A check is enclosed.

❑ Payment by credit card. Form PTO-2038 is attached.

❑ The director is hereby authorized to charge the required fee(s), any deficiency, or credits any overpayment, to Deposit Account Number _____ (enclose an extra copy of this form).

5. **Change in Entity Status** (from status indicated above)

❑ Applicant certifying micro entity status. See 37 CFR 1.29

❑ Applicant asserting small entity status. See 37 CFR 1.27

❑ Applicant changing to regular undiscounted fee status.

NOTE: Absent a valid certification of Micro Entity Status (see forms PTO/SB/15A and 15B), issue fee payment in the micro entity amount will not be accepted at the risk of application abandonment.
NOTE: If the application was previously under micro entity status, checking this box will be taken to be a notification of loss of entitlement to micro entity status.
NOTE: Checking this box will be taken to be a notification of loss of entitlement to small or micro entity status, as applicable.

NOTE: This form must be signed in accordance with 37 CFR 1.31 and 1.33. See 37 CFR 1.4 for signature requirements and certifications.

Authorized Signature _____ Date _____

Typed or printed name _____ Registration No. _____

UNITED STATES DEPARTMENT OF COMMERCE
United States Patent and Trademark Office
Address: COMMISSIONER FOR PATENTS
P.O. Box 1450
Alexandria, Virginia 22313-1450
www.uspto.gov

APPLICATION NO.	FILING DATE	FIRST NAMED INVENTOR	ATTORNEY DOCKET NO.	CONFIRMATION NO.
15/061,774	03/04/2016	Wesley Scott Harper	A0130.0090.C1C1	5923

95508 7590 09/25/2018
One LLP
4000 MacArthur Blvd.
East Tower, Suite 500
Newport Beach, CA 92660

EXAMINER
LIN, JERRY

ART UNIT	PAPER NUMBER
1631	

DATE MAILED: 09/25/2018

Determination of Patent Term Adjustment under 35 U.S.C. 154 (b)
(Applications filed on or after May 29, 2000)

The Office has discontinued providing a Patent Term Adjustment (PTA) calculation with the Notice of Allowance.

Section 1(h)(2) of the AIA Technical Corrections Act amended 35 U.S.C. 154(b)(3)(B)(i) to eliminate the requirement that the Office provide a patent term adjustment determination with the notice of allowance. See Revisions to Patent Term Adjustment, 78 Fed. Reg. 19416, 19417 (Apr. 1, 2013). Therefore, the Office is no longer providing an initial patent term adjustment determination with the notice of allowance. The Office will continue to provide a patent term adjustment determination with the Issue Notification Letter that is mailed to applicant approximately three weeks prior to the issue date of the patent, and will include the patent term adjustment on the patent. Any request for reconsideration of the patent term adjustment determination (or reinstatement of patent term adjustment) should follow the process outlined in 37 CFR 1.705.

Any questions regarding the Patent Term Extension or Adjustment determination should be directed to the Office of Patent Legal Administration at (571)-272-7702. Questions relating to issue and publication fee payments should be directed to the Customer Service Center of the Office of Patent Publication at 1-(888)-786-0101 or (571)-272-4200.

OMB Clearance and PRA Burden Statement for PTOL-85 Part B

The Paperwork Reduction Act (PRA) of 1995 requires Federal agencies to obtain Office of Management and Budget approval before requesting most types of information from the public. When OMB approves an agency request to collect information from the public, OMB (i) provides a valid OMB Control Number and expiration date for the agency to display on the instrument that will be used to collect the information and (ii) requires the agency to inform the public about the OMB Control Number's legal significance in accordance with 5 CFR 1320.5(b).

The information collected by PTOL-85 Part B is required by 37 CFR 1.311. The information is required to obtain or retain a benefit by the public which is to file (and by the USPTO to process) an application. Confidentiality is governed by 35 U.S.C. 122 and 37 CFR 1.14. This collection is estimated to take 12 minutes to complete, including gathering, preparing, and submitting the completed application form to the USPTO. Time will vary depending upon the individual case. Any comments on the amount of time you require to complete this form and/or suggestions for reducing this burden, should be sent to the Chief Information Officer, U.S. Patent and Trademark Office, U.S. Department of Commerce, P.O. Box 1450, Alexandria, Virginia 22313-1450. DO NOT SEND FEES OR COMPLETED FORMS TO THIS ADDRESS. SEND TO: Commissioner for Patents, P.O. Box 1450, Alexandria, Virginia 22313-1450. Under the Paperwork Reduction Act of 1995, no persons are required to respond to a collection of information unless it displays a valid OMB control number.

Privacy Act Statement

The Privacy Act of 1974 (P.L. 93-579) requires that you be given certain information in connection with your submission of the attached form related to a patent application or patent. Accordingly, pursuant to the requirements of the Act, please be advised that: (1) the general authority for the collection of this information is 35 U.S.C. 2(b)(2); (2) furnishing of the information solicited is voluntary; and (3) the principal purpose for which the information is used by the U.S. Patent and Trademark Office is to process and/or examine your submission related to a patent application or patent. If you do not furnish the requested information, the U.S. Patent and Trademark Office may not be able to process and/or examine your submission, which may result in termination of proceedings or abandonment of the application or expiration of the patent.

The information provided by you in this form will be subject to the following routine uses:

1. The information on this form will be treated confidentially to the extent allowed under the Freedom of Information Act (5 U.S.C. 552) and the Privacy Act (5 U.S.C 552a). Records from this system of records may be disclosed to the Department of Justice to determine whether disclosure of these records is required by the Freedom of Information Act.
2. A record from this system of records may be disclosed, as a routine use, in the course of presenting evidence to a court, magistrate, or administrative tribunal, including disclosures to opposing counsel in the course of settlement negotiations.
3. A record in this system of records may be disclosed, as a routine use, to a Member of Congress submitting a request involving an individual, to whom the record pertains, when the individual has requested assistance from the Member with respect to the subject matter of the record.
4. A record in this system of records may be disclosed, as a routine use, to a contractor of the Agency having need for the information in order to perform a contract. Recipients of information shall be required to comply with the requirements of the Privacy Act of 1974, as amended, pursuant to 5 U.S.C. 552a(m).
5. A record related to an International Application filed under the Patent Cooperation Treaty in this system of records may be disclosed, as a routine use, to the International Bureau of the World Intellectual Property Organization, pursuant to the Patent Cooperation Treaty.
6. A record in this system of records may be disclosed, as a routine use, to another federal agency for purposes of National Security review (35 U.S.C. 181) and for review pursuant to the Atomic Energy Act (42 U.S.C. 218(c)).
7. A record from this system of records may be disclosed, as a routine use, to the Administrator, General Services, or his/her designee, during an inspection of records conducted by GSA as part of that agency's responsibility to recommend improvements in records management practices and programs, under authority of 44 U.S.C. 2904 and 2906. Such disclosure shall be made in accordance with the GSA regulations governing inspection of records for this purpose, and any other relevant (i.e., GSA or Commerce) directive. Such disclosure shall not be used to make determinations about individuals.
8. A record from this system of records may be disclosed, as a routine use, to the public after either publication of the application pursuant to 35 U.S.C. 122(b) or issuance of a patent pursuant to 35 U.S.C. 151. Further, a record may be disclosed, subject to the limitations of 37 CFR 1.14, as a routine use, to the public if the record was filed in an application which became abandoned or in which the proceedings were terminated and which application is referenced by either a published application, an application open to public inspection or an issued patent.
9. A record from this system of records may be disclosed, as a routine use, to a Federal, State, or local law enforcement agency, if the USPTO becomes aware of a violation or potential violation of law or regulation.

Notice of Allowability	Application No. 15/061,774	Applicant(s) Harper, Wesley Scott	
	Examiner JERRY LIN	Art Unit 1631	AIA Status No

-- The MAILING DATE of this communication appears on the cover sheet with the correspondence address--

All claims being allowable, PROSECUTION ON THE MERITS IS (OR REMAINS) CLOSED in this application. If not included herewith (or previously mailed), a Notice of Allowance (PTOL-85) or other appropriate communication will be mailed in due course. **THIS NOTICE OF ALLOWABILITY IS NOT A GRANT OF PATENT RIGHTS.** This application is subject to withdrawal from issue at the initiative of the Office or upon petition by the applicant. See 37 CFR 1.313 and MPEP 1308.

1. ☑ This communication is responsive to the reply filed August 16, 2018.
   ☐ A declaration(s)/affidavit(s) under **37 CFR 1.130(b)** was/were filed on _____.

2. ☐ An election was made by the applicant in response to a restriction requirement set forth during the interview on _____; the restriction requirement and election have been incorporated into this action.

3. ☑ The allowed claim(s) is/are 23-40 . As a result of the allowed claim(s), you may be eligible to benefit from the **Patent Prosecution Highway** program at a participating intellectual property office for the corresponding application. For more information, please see **http://www.uspto.gov/patents/init_events/pph/index.jsp** or send an inquiry to **PPHfeedback@uspto.gov.**

4. ☐ Acknowledgment is made of a claim for foreign priority under 35 U.S.C. § 119(a)-(d) or (f).

   Certified copies:

   a) ☐ All b) ☐ Some *c) ☐ None of the:

   1. ☐ Certified copies of the priority documents have been received.
   2. ☐ Certified copies of the priority documents have been received in Application No. _____ .
   3. ☐ Copies of the certified copies of the priority documents have been received in this national stage application from the International Bureau (PCT Rule 17.2(a)).

   * Certified copies not received: _____ .

Applicant has THREE MONTHS FROM THE "MAILING DATE" of this communication to file areply complying with the requirements noted below. Failure to timely comply will result in ABANDONMENT of this application.
THIS THREE-MONTH PERIOD IS NOT EXTENDABLE.

5. ☐ CORRECTED DRAWINGS (as "replacement sheets") must be submitted.
   ☐ including changes required by the attached Examiner's Amendment / Comment or in the Office action of Paper No./Mail Date _____ .

   Identifying indicia such as the application number (see 37 CFR 1.84(c)) should be written on the drawings in the front (not the back) of each sheet. Replacement sheet(s) should be labeled as such in the header according to 37 CFR 1.121(d).

6. ☐ DEPOSIT OF and/or INFORMATION about the deposit of BIOLOGICAL MATERIAL must be submitted. Note the attached Examiner's comment regarding REQUIREMENT FOR THE DEPOSIT OF BIOLOGICAL MATERIAL.

Attachment(s)

1. ☐ Notice of References Cited (PTO-892)
2. ☐ Information Disclosure Statements (PTO/SB/08), Paper No./Mail Date _____.
3. ☐ Examiner's Comment Regarding Requirement for Deposit of Biological Material _____.
4. ☐ Interview Summary (PTO-413), Paper No./Mail Date. _____.
5. ☐ Examiner's Amendment/Comment
6. ☐ Examiner's Statement of Reasons for Allowance
7. ☐ Other _____.

/JERRY LIN/
Primary Examiner, Art Unit 1631

Issue Classification	Application/Control No.	Applicant(s)/Patent Under Reexamination
	15/061,774	Harper, Wesley Scott
	Examiner	**Art Unit**
	JERRY LIN	1631

CPC						
Symbol					**Type**	**Version**
A61B	/	5	/	14532	F	2013-01-01
A61B	/	5	/	1473	I	2013-01-01
A61B	/	5	/	1495	I	2013-01-01
G01D	/	18	/	00	I	2013-01-01
G01N	/	31	/	22	I	2013-01-01
G01N	/	33	/	66	I	2013-01-01
G16H	/	40	/	40	I	2018-01-01

CPC Combination Sets								
Symbol					**Type**	**Set**	**Ranking**	**Version**
	/		/					

NONE (Assistant Examiner) (Date)		**Total Claims Allowed:** 18	
/JERRY LIN/ Primary Examiner, Art Unit 1631 (Primary Examiner) (Date)	15 September 2018	O.G. Print Claim(s) None	O.G. Print Figure None

U.S. Patent and Trademark Office Part of Paper No.: 20180915

Issue Classification	Application/Control No.	Applicant(s)/Patent Under Reexamination
	15/061,774	Harper, Wesley Scott
	Examiner	**Art Unit**
	JERRY LIN	1631

INTERNATIONAL CLASSIFICATION				
CLAIMED				
A61B	/	5	/	145

NON-CLAIMED				
	/		/	

US ORIGINAL CLASSIFICATION	
CLASS	**SUBCLASS**
702	19

CROSS REFERENCES(S)						
CLASS	**SUBCLASS (ONE SUBCLASS PER BLOCK)**					

NONE (Assistant Examiner) (Date)		**Total Claims Allowed:** 18	
/JERRY LIN/ Primary Examiner, Art Unit 1631 (Primary Examiner)	15 September 2018 (Date)	O.G. Print Claim(s) None	O.G. Print Figure None

U.S. Patent and Trademark Office

Part of Paper No.: 20180915

Issue Classification	Application/Control No.	Applicant(s)/Patent Under Reexamination
	15/061,774	Harper, Wesley Scott
	Examiner	**Art Unit**
	JERRY LIN	1631

☑ Claims renumbered in the same order as presented by applicant ☐ CPA ☑ T.D. ☐ R.1.47

CLAIMS

Final	Original	Final	Original	Final	Original	Final	Original	Final	Original	Final	Original	Final	Original	Final	Original

NONE (Assistant Examiner) (Date)		**Total Claims Allowed:** 18	
/JERRY LIN/ Primary Examiner, Art Unit 1631 (Primary Examiner) (Date)	15 September 2018	O.G. Print Claim(s) None	O.G. Print Figure None

U.S. Patent and Trademark Office Part of Paper No.: 20180915

Search Notes	Application/Control No.	Applicant(s)/Patent Under Reexamination
	15/061,774	Harper, Wesley Scott
	Examiner	**Art Unit**
	JERRY LIN	1631

CPC - Searched*		
Symbol	**Date**	**Examiner**
A61B5/14532	09/15/2018	JL

CPC Combination Sets - Searched*		
Symbol	**Date**	**Examiner**

US Classification - Searched*			
Class	**Subclass**	**Date**	**Examiner**
702	19	09/15/2018	JL

* See search history printout included with this form or the SEARCH NOTES box below to determine the scope of the search.

Search Notes		
Search Notes	**Date**	**Examiner**
See Printout	09/15/2018	JL
Inventor Search of Harper in PALM	09/15/2018	JL

Interference Search			
US Class/CPC Symbol	**US Subclass/CPC Group**	**Date**	**Examiner**
A61B5	14532	09/15/2018	JL
702	19	09/15/2018	JL

/JERRY LIN/ Primary Examiner, Art Unit 1631	

STN

(FILE 'HOME' ENTERED AT 10:22:48 ON 15 SEP 2018)

FILE 'MEDLINE, EMBASE, BIOSIS, COMPUSCIENCE' ENTERED AT 10:23:05 ON 15 SEP 2018

```
L1          127 S SENSOR AND DISABLE
L2           85 DUP REM L1 (42 DUPLICATES REMOVED)
L3         3792 S  SENSOR AND (GAP OR PAUSE)
L4          107 S L3 AND (ANALYTE)
L5           67 DUP REM L4 (40 DUPLICATES REMOVED)
```

Bibliographic Data

Application No: 15/061,774

Foreign Priority claimed: ○ Yes ◉ No

35 USC 119 (a-d) conditions met: ☐ Yes ☑ No ☐ Met After Allowance

Verified and Acknowledged: /JERRY LIN/ (Examiner's Signature) | Initials

Title: METHODS AND SYSTEMS FOR EARLY SIGNAL ATTENUATION DETECTION AND PROCESSING

FILING or 371(c) DATE	CLASS	GROUP ART UNIT	ATTORNEY DOCKET NO.
03/04/2016	702	1631	A0130.0090.C1C1
RULE			

APPLICANTS

ABBOTT DIABETES CARE INC., Alameda, CA,

INVENTORS

Wesley Scott Harper Alameda, CA, UNITED STATES

CONTINUING DATA

This application is a CON of 13925694 06/24/2013 PAT 9310230

13925694 is a CON of 12769635 04/28/2010 PAT 8483967

12769635 has PRO of 61173600 04/29/2009

FOREIGN APPLICATIONS

IF REQUIRED, FOREIGN LICENSE GRANTED**

03/21/2016

STATE OR COUNTRY

UNITED STATES

ADDRESS

One LLP
4000 MacArthur Blvd.
East Tower, Suite 500
Newport Beach, CA 92660
UNITED STATES

FILING FEE RECEIVED

$1,600

WEST Search History for Application 15061774

Creation Date: 2018091510:14

Prior Art Searches

Query	DB	Hits	Op.	Plur.	Thes.	Date
9310230.pn. or 8483967.pn.	PGPB, USPT	2	OR	YES		05-14-2018
sensor same attenuation	PGPB, USPT	20678	OR	YES		05-14-2018
(sensor same attenuation) and (monitor or assay or array or microarray or analyte)	PGPB, USPT	14820	OR	YES		05-14-2018
(sensor same attenuation) same (gap or pause or remove)	PGPB, USPT	758	OR	YES		05-14-2018
(sensor same attenuation same (gap or pause or remove)) and (monitor or assay or array or microarray or analyte)	PGPB, USPT	531	OR	YES		05-14-2018
(sensor same attenuation same (gap or pause or remove)) same time	PGPB, USPT	178	OR	YES		05-14-2018
(sensor same attenuation same (gap or pause or remove) same time) and (monitor or assay or array or microarray or analyte)	PGPB, USPT	119	OR	YES		05-14-2018
(sensor same attenuation) same (gap or pause or remove)	PGPB, USPT	783	OR	YES		09-15-2018
((sensor same attenuation) same (gap or pause or remove)) and (monitor or assay or array or microarray or analyte)	PGPB, USPT	553	OR	YES		09-15-2018
((sensor same attenuation) same (gap or pause or remove) and (monitor or assay or array or microarray or analyte)) and time	PGPB, USPT	535	OR	YES		09-15-2018
(sensor same attenuation) same (gap or pause or remove) same time	PGPB, USPT	184	OR	YES		09-15-2018
((sensor same attenuation) same (gap or pause or remove) same time) and (monitor or assay or array or microarray or analyte)	PGPB, USPT	124	OR	YES		09-15-2018
702/19.ccls.	PGPB, USPT	9175	OR	YES		09-15-2018
		3	OR	YES		09-15-2018

(702/19.ccls.) and ((sensor same attenuation) same (gap or pause or remove))	PGPB, USPT					
A61B5/14532.cpc.	PGPB, USPT	13420	OR	YES		09-15-2018
(A61B5/14532.cpc.) and ((sensor same attenuation) same (gap or pause or remove))	PGPB, USPT	23	OR	YES		09-15-2018

Application Number	Application/Control No.	Applicant(s)/Patent under Reexamination
	15/061,774	HARPER, WESLEY SCOTT

Document Code - DISQ	Internal Document – DO NOT MAIL

TERMINAL DISCLAIMER	☒ APPROVED	☐ DISAPPROVED
Date Filed : 8/16/18	This patent is subject to a Terminal Disclaimer	

Approved/Disapproved by:

Felicia D. Roberts

2 TDs approved with this filing date

U.S. Patent and Trademark Office

PTO/SB/06 (09-11)
Approved for use through 1/31/2014. OMB 0651-0032
U.S. Patent and Trademark Office; U.S. DEPARTMENT OF COMMERCE
Under the Paperwork Reduction Act of 1995, no persons are required to respond to a collection of information unless it displays a valid OMB control number.

PATENT APPLICATION FEE DETERMINATION RECORD

Substitute for Form PTO-875

Application or Docket Number	Filing Date	
15/061,774	03/04/2016	☐ To be Mailed

ENTITY: ☒ LARGE ☐ SMALL ☐ MICRO

APPLICATION AS FILED – PART I

FOR	(Column 1) NUMBER FILED	(Column 2) NUMBER EXTRA	RATE ($)	FEE ($)
☐ BASIC FEE (37 CFR 1.16(a), (b), or (c))	N/A	N/A	N/A	
☐ SEARCH FEE (37 CFR 1.16(k), (i), or (m))	N/A	N/A	N/A	
☐ EXAMINATION FEE (37 CFR 1.16(o), (p), or (q))	N/A	N/A	N/A	
TOTAL CLAIMS (37 CFR 1.16(i))	minus 20 =	*	x $ =	
INDEPENDENT CLAIMS (37 CFR 1.16(h))	minus 3 =	*	x $ =	
☐ APPLICATION SIZE FEE (37 CFR 1.16(s))	If the specification and drawings exceed 100 sheets of paper, the application size fee due is $310 ($155 for small entity) for each additional 50 sheets or fraction thereof. See 35 U.S.C. 41(a)(1)(G) and 37 CFR 1.16(s).			
☐ MULTIPLE DEPENDENT CLAIM PRESENT (37 CFR 1.16(j))				
* If the difference in column 1 is less than zero, enter "0" in column 2.			TOTAL	

APPLICATION AS AMENDED – PART II

AMENDMENT

08/16/2018	(Column 1) CLAIMS REMAINING AFTER AMENDMENT		(Column 2) HIGHEST NUMBER PREVIOUSLY PAID FOR	(Column 3) PRESENT EXTRA	RATE ($)	ADDITIONAL FEE ($)
Total (37 CFR 1.16(i))	* 18	Minus	** 20	= 0	x $100 =	0
Independent (37 CFR 1.16(h))	* 2	Minus	***3	= 0	x $460 =	0
☐ Application Size Fee (37 CFR 1.16(s))						
☐ FIRST PRESENTATION OF MULTIPLE DEPENDENT CLAIM (37 CFR 1.16(j))						
					TOTAL ADD'L FEE	0

AMENDMENT

	(Column 1) CLAIMS REMAINING AFTER AMENDMENT		(Column 2) HIGHEST NUMBER PREVIOUSLY PAID FOR	(Column 3) PRESENT EXTRA	RATE ($)	ADDITIONAL FEE ($)
Total (37 CFR 1.16(i))	*	Minus	**	=	x $ =	
Independent (37 CFR 1.16(h))	*	Minus	***	=	x $ =	
☐ Application Size Fee (37 CFR 1.16(s))						
☐ FIRST PRESENTATION OF MULTIPLE DEPENDENT CLAIM (37 CFR 1.16(j))						
					TOTAL ADD'L FEE	

* If the entry in column 1 is less than the entry in column 2, write "0" in column 3.
** If the "Highest Number Previously Paid For" IN THIS SPACE is less than 20, enter "20".
*** If the "Highest Number Previously Paid For" IN THIS SPACE is less than 3, enter "3".
The "Highest Number Previously Paid For" (Total or Independent) is the highest number found in the appropriate box in column 1.

LIE
LAMONT MCLAUCHLIN

This collection of information is required by 37 CFR 1.16. The information is required to obtain or retain a benefit by the public which is to file (and by the USPTO to process) an application. Confidentiality is governed by 35 U.S.C. 122 and 37 CFR 1.14. This collection is estimated to take 12 minutes to complete, including gathering, preparing, and submitting the completed application form to the USPTO. Time will vary depending upon the individual case. Any comments on the amount of time you require to complete this form and/or suggestions for reducing this burden, should be sent to the Chief Information Officer, U.S. Patent and Trademark Office, U.S. Department of Commerce, P.O. Box 1450, Alexandria, VA 22313-1450. DO NOT SEND FEES OR COMPLETED FORMS TO THIS ADDRESS. **SEND TO: Commissioner for Patents, P.O. Box 1450, Alexandria, VA 22313-1450.**
If you need assistance in completing the form, call 1-800-PTO-9199 and select option 2.

Best Available Copy

RECEIVED
CENTRAL FAX CENTER

AUG 1 6 2018

Docket Nos.: A0130.0090.C1C1
9368USC2

IN THE UNITED STATES PATENT AND TRADEMARK OFFICE

In re Patent Application of:
Wesley Scott Harper

Application No.: 15/061,774

Confirmation No.: 5923

Filed: March 4, 2016

Art Unit: 1631

For: METHODS AND SYSTEMS FOR EARLY SIGNAL ATTENUATION DETECTION AND PROCESSING

Examiner: Jerry Lin

RESPONSE TO NON-FINAL OFFICE ACTION UNDER 37 C.F.R. 1.111

EFS Web
Commissioner for Patents

INTRODUCTORY COMMENTS

In response to the Non-Final Office Action dated May 17, 2018, please see the following:

Listing of the Claims beginning on page 2 of this paper; and

Remarks beginning on page 6 of this paper.

LISTING OF THE CLAIMS

This listing of claims replaces all previous versions of the claims in the application.

1-22. (Cancelled)

23. (Previously presented) A method of monitoring for and responding to an early signal attenuation condition associated with an analyte sensor of an analyte monitoring system that includes one or more processors, wherein the analyte sensor is in a user's body, the method comprising:

detecting, with the one or more processors, that sensor data was collected by the analyte sensor during a time period in which the early signal attenuation condition was present;

storing the sensor data collected during the time period;

disabling, with the one or more processors, an output of sensor data collected during the time period in which the early signal attenuation condition was present such that a gap exists in any output of sensor data from that time period;

retrieving the stored sensor data collected during the time period; and

processing, with the one or more processors, the retrieved sensor data collected during the time period such that the gap in the output of the sensor data is at least partially filled.

24. (Previously presented) The method of claim 23, wherein the processing of the retrieved sensor data is performed retrospectively after detecting, with the one or more processors, that the early signal attenuation condition is no longer present.

25. (Previously presented) The method of claim 23, further comprising, after disabling the output of sensor data and prior to processing the retrieved sensor data:

detecting, with the one or more processors, that the early signal attenuation condition is not present.

PAGE 5/12 * RCVD AT 8/16/2018 1:50:11 PM [Eastern Daylight Time] * SVR:W-PTOFAX-003/4 * DNIS:2738300 * CSID:19492092023 * DURATION (mm-ss):08-09

26. (Previously presented) The method of claim 23, wherein the sensor data is stored with time information associated with the time period.

27. (Previously presented) The method of claim 23, further comprising outputting a first graphical representation of the sensor data against time with the gap existing in the time period in which the early signal attenuation condition was present.

28. (Previously presented) The method of claim 26, further comprising, after processing the retrieved sensor data, outputting a second graphical representation of the sensor data against time with the gap at least partially filled.

29. (Previously presented) The method of claim 23, wherein disabling, with the one or more processors, the output of sensor data collected during the time period in which the early signal attenuation condition was present comprises disabling, with the one or more processors, all displayed output of sensor data collected during the time period in which the early signal attenuation condition was present such that the gap exists in any output of sensor data from that time period.

30. (Previously presented) The method of claim 23, wherein the analyte sensor comprises a plurality of electrodes including a working electrode, wherein the working electrode comprises an analyte-responsive enzyme and a mediator, wherein at least one of the analyte-responsive enzyme and the mediator is chemically bonded to a polymer disposed on the working electrode, and wherein at least one of the analyte-responsive enzyme and the mediator is crosslinked with the polymer.

31. (Previously presented) The method of claim 23, wherein the sensor data comprises glucose concentration data.

32. (Previously presented) An analyte monitoring system, comprising:

an interface configured to receive sensor data collected by an analyte sensor within a user's body;

one or more processors; and

a memory device for storing instructions which, when executed by the one or more processors, causes the one or more processors to:

detect that sensor data was collected by the analyte sensor during a time period in which an early signal attenuation condition was present;

disable an output of sensor data collected during the time period in which the early signal attenuation condition was present such any output of sensor data from that time period comprises a gap;

retrieve stored sensor data collected during the time period in which the early signal attenuation condition was present; and

process the retrieved sensor data collected during the time period to at least partially fill that the gap in any output of the sensor data.

33. (Previously presented) The system of claim 32, wherein the memory device stores instructions which, when executed by the one or more processors, further causes the one or more processors to, after disablement of the output of sensor data, detect that the early signal attenuation condition is not present.

34. (Previously presented) The system of claim 32, wherein the memory device stores instructions which, when executed by the one or more processors, further causes the one or more processors to, cause the output of a first graphical representation of the sensor data against time with the gap present in the time period in which the early signal attenuation condition was present.

35. (Previously presented) The system of claim 34, wherein the memory device stores instructions which, when executed by the one or more processors, further causes the one or more processors to, after processing the retrieved sensor data, cause the output a second graphical representation of the sensor data against time with the gap at least partially filled.

36. (Previously presented) The system of claim 32, wherein the memory device stores instructions which, when executed by the one or more processors, further causes the one or more

processors to, disable all displayed output of sensor data collected during the time period in which the early signal attenuation condition was present such that the gap exists in any output of sensor data from that time period.

37. (Previously presented) The system of claim 32, wherein the sensor data comprises glucose concentration data.

38. (Previously presented) The system of claim 32, further comprising the analyte sensor.

39. (Previously presented) The system of claim 38, wherein the analyte sensor comprises a plurality of electrodes including a working electrode, wherein the working electrode comprises an analyte-responsive enzyme and a mediator, wherein at least one of the analyte-responsive enzyme and the mediator is chemically bonded to a polymer disposed on the working electrode, and wherein at least one ~~of~~ the analyte-responsive enzyme and the mediator is crosslinked with the polymer.

40. (Previously presented) The system of claim 32, further comprising a mobile phone that comprises the interface, the one or more processors, and the memory device.

REMARKS

Claims 1-22 have been cancelled without prejudice and claims 23-40 are pending. Reconsideration is respectfully requested.

DOUBLE PATENTING REJECTIONS

Claims 23-40 have been rejected on the ground of nonstatutory double patenting as being unpatentable over claims 1-20 of U.S. Patent No. 9,310,230 and claims 1-22 of U.S. Patent No. 8,483,967. Without conceding to the rejections, and solely to advance prosecution of the present application, terminal disclaimers over U.S. Patent Nos. 9,310,230 and 8,483,967 are submitted herewith. It is respectfully requested that the rejection be withdrawn.

CONCLUSION

Amendments to and/or cancellations of the claims are made without prejudice and solely to clarify the issues before the Examiner and/or to advance prosecution of this application and do not constitute a *de facto* acquiescence to any objection and/or rejection. Accordingly, this response does not concede that previously pending claims are not patentable.

The right is reserved to pursue claims to any subject matter supported by the disclosure of this application in one or more continuation and/or divisional applications at a later time, including the subject matter of any previously pending claims regardless of whether those claims were amended or cancelled herein. This may entail the pursuit of broader claims, narrower claims, and subject matter that was previously relinquished by virtue of argument or amendment.

Any silence with regard to the rejections of and/or objections to certain dependent claims constitutes a recognition that such are moot based on amendments or remarks made with respect to the independent claim from which the dependent claims depend. Such silence does not constitute a *de facto* acquiescence to any objection and/or rejection.

It is respectfully submitted that the claims are in condition for allowance. Prompt and favorable action on the merits of the claims is earnestly solicited. The Examiner is invited to contact the undersigned directly should there be any questions or comments with respect to prosecution of this application. The USPTO is hereby authorized to charge any outstanding fees to Deposit Account No. 50-5201.

Dated: August 16, 2018

Respectfully submitted,

Electronic signature: /Mark Stirrat/

Mark Stirrat
Registration No.: 50,756
ONE LLP
4000 MacArthur Blvd.
East Tower, Suite 500
Newport Beach, CA 92660
Attorney for Applicant
Tel. 949-444-5970

PTO/AIA/26 (04-13)
Approved for use through 04/30/2013. OMB 0651-0031
U.S. Patent and Trademark Office; U.S. DEPARTMENT OF COMMERCE
Under the Paperwork Reduction Act of 1995, no persons are required to respond to a collection of information unless it displays a valid OMB control number.

TERMINAL DISCLAIMER TO OBVIATE A DOUBLE PATENTING REJECTION OVER A "PRIOR" PATENT	Docket Number (Optional) A0130.0090.C1C1

In re Application of: Wesley Scott Harper

Application No.: 15/061,774

Filed: March 4, 2016

For: METHODS AND SYSTEMS FOR EARLY SIGNAL ATTENUATION DETECTION AND PROCESSING

The applicant, Abbott Diabetes Care Inc., owner of 100 percent interest in the instant application hereby disclaims, except as provided below, the terminal part of the statutory term of any patent granted on the instant application which would extend beyond the expiration date of the full statutory term of **prior patent** No. 8,483,967 as the term of said **prior patent** is presently shortened by any terminal disclaimer. The applicant hereby agrees that any patent so granted on the instant application shall be enforceable only for any during such period that it and the **prior patent** are commonly owned. This agreement runs with any patent granted on the instant application and is binding upon the grantee, its successors or assigns.

In making the above disclaimer, the applicant does not disclaim the terminal part of the term of any patent granted on the instant application that would extend to the expiration date of the full statutory term of the **prior patent**, "as the term of said **prior patent** is presently shortened by any terminal disclaimer," in the event that said **prior patent** later:

expires for failure to pay a maintenance fee;
is held unenforceable;
is found invalid by a court of competent jurisdiction;
is statutorily disclaimed in whole or terminally disclaimed under 37 CFR 1.321;
has all claims canceled by a reexamination certificate;
is reissued; or
is in any manner terminated prior to the expiration of its full statutory term as presently shortened by any terminal disclaimer.

Check either box 1 or 2 below, if appropriate.

1. ☐ The undersigned is the applicant. If the applicant is an assignee, the undersigned is authorized to act on behalf of the assignee.

I hereby acknowledge that any willful false statements made are punishable under 18 U.S.C. 1001 by fine or imprisonment of not more than five (5) years, or both.

2. ☑ The undersigned is an attorney or agent of record. Reg. No. 50,756

/Mark Stirrat/	August 16, 2018
Signature	Date
Mark Stirrat	
Typed or printed name	
Attorney for Applicant	949.502.2870
Title	Telephone Number

☑ Terminal disclaimer fee under 37 CFR 1.20(d) included.

WARNING: Information on this form may become public. Credit card information should not be included on this form. Provide credit card information and authorization on PTO-2038.

This collection of information is required by 37 CFR 1.321. The information is required to obtain or retain a benefit by the public which is to file (and by the USPTO to process) an application. Confidentiality is governed by 35 U.S.C. 122 and 37 CFR 1.11 and 1.14. This collection is estimated to take 12 minutes to complete, including gathering, preparing, and submitting the completed application form to the USPTO. Time will vary depending upon the individual case. Any comments on the amount of time you require to complete this form and/or suggestions for reducing this burden, should be sent to the Chief Information Officer, U.S. Patent and Trademark Office, U.S. Department of Commerce, P.O. Box 1450, Alexandria, VA 22313-1450. DO NOT SEND FEES OR COMPLETED FORMS TO THIS ADDRESS. **SEND TO: Commissioner for Patents, P.O. Box 1450, Alexandria, VA 22313-1450.**

If you need assistance in completing the form, call 1-800-PTO-9199 and select option 2.

08/23/2018 SSANDAR1 00000012 15061774
01 FC:1814 160.00 OP

Best Available Copy

RECEIVED
CENTRAL FAX CENTER
AUG 1 6 2018

FAX COVER SHEET

TO	
COMPANY	
FAX NUMBER	15712738300
FROM	Chris Bruno
DATE	2018-08-16 17:49:47 GMT
RE	15/061,774 Fax Transmission

COVER MESSAGE

Sincerely,

Alana Fredericks
IP Legal Assistant
One LLP
4000 MacArthur Blvd.
East Tower, Suite 500
Newport Beach, CA 92660
T: 949.444.5975
F: 949.209.2023
E: Afredericks@onellp.com

RECEIVED
CENTRAL FAX CENTER
AUG 16 2018

Doc Code: TRAN.LET
Document Description: Transmittal Letter

PTO/SB/21 (07-09)
Approved for use through 11/30/2020. OMB 0651-0031
U.S. Patent and Trademark Office; U.S. DEPARTMENT OF COMMERCE
Under the Paperwork Reduction Act of 1995, no persons are required to respond to a collection of information unless it displays a valid OMB control number

TRANSMITTAL FORM (to be used for all correspondence after initial filing)		
	Application Number	15/061,774
	Filing Date	March 4, 2016
	First Named Inventor	Wesley Scott Harper
	Art Unit	1631
	Examiner Name	Jerry Lin
Total Number of Pages in This Submission 11	Attorney Docket Number	A0130.0090.C1C1

ENCLOSURES *(Check all that apply)*

- [ ] Fee Transmittal Form
  - [ ] Fee Attached
- [x] Amendment/Reply
  - [ ] After Final
  - [ ] Affidavits/declaration(s)
- [ ] Extension of Time Request
- [ ] Express Abandonment Request
- [ ] Information Disclosure Statement
- [ ] Certified Copy of Priority Document(s)
- [ ] Reply to Missing Parts/ Incomplete Application
  - [ ] Reply to Missing Parts under 37 CFR 1.52 or 1.53
- [ ] Drawing(s)
- [ ] Licensing-related Papers
- [ ] Petition
- [ ] Petition to Convert to a Provisional Application
- [ ] Power of Attorney, Revocation Change of Correspondence Address
- [x] Terminal Disclaimer
- [ ] Request for Refund
- [ ] CD, Number of CD(s) _____
  - [ ] Landscape Table on CD
- [ ] After Allowance Communication to TC
- [ ] Appeal Communication to Board of Appeals and Interferences
- [ ] Appeal Communication to TC (Appeal Notice, Brief, Reply Brief)
- [ ] Proprietary Information
- [ ] Status Letter
- [x] Other Enclosure(s) (please identify below): Credit Card Payment Form

Remarks

SIGNATURE OF APPLICANT, ATTORNEY, OR AGENT

Firm Name	ONSELL		
Signature			
Printed name	Mark Stirrat		
Date	August 16, 2018	Reg. No.	51,957

CERTIFICATE OF TRANSMISSION/MAILING

I hereby certify that this correspondence is being facsimile transmitted to the USPTO or deposited with the United States Postal Service with sufficient postage as first class mail in an envelope addressed to: Commissioner for Patents, P.O. Box 1450, Alexandria, VA 22313-1450 on the date shown below:

Signature	Alana Fredericks		
Typed or printed name	Alana Fredericks	Date	August 16, 2018

This collection of information is required by 37 CFR 1.5. The information is required to obtain or retain a benefit by the public which is to file (and by the USPTO to process) an application. Confidentiality is governed by 35 U.S.C. 122 and 37 CFR 1.11 and 1.14. This collection is estimated to 2 hours to complete, including gathering, preparing, and submitting the completed application form to the USPTO. Time will vary depending upon the individual case. Any comments on the amount of time you require to complete this form and/or suggestions for reducing this burden, should be sent to the Chief Information Officer, U.S. Patent and Trademark Office, U.S. Department of Commerce, P.O. Box 1450, Alexandria, VA 22313-1450. DO NOT SEND FEES OR COMPLETED FORMS TO THIS ADDRESS. SEND TO: **Commissioner for Patents, P.O. Box 1450, Alexandria, VA 22313-1450.**

If you need assistance in completing the form, call 1-800-PTO-9199 and select option 2.

FAX COVER SHEET

TO	
COMPANY	
FAX NUMBER	15712738300
FROM	Chris Bruno
DATE	2018-08-16 17:49:47 GMT
RE	15/061,774 Fax Transmission

COVER MESSAGE

Sincerely,

Alana Fredericks
IP Legal Assistant
One LLP
4000 MacArthur Blvd.
East Tower, Suite 500
Newport Beach, CA 92660
T: 949.444.5975
F: 949.209.2023
E: Afredericks@onellp.com

Best Available Copy

RECEIVED
CENTRAL FAX CENTER
AUG 16 2018

Doc Code: TRAN.LET
Document Description: Transmittal Letter

PTO/SB/21 (07-09)
Approved for use through 11/30/2020. OMB 0651-0031
U.S. Patent and Trademark Office; U.S. DEPARTMENT OF COMMERCE

Under the Paperwork Reduction Act of 1995, no persons are required to respond to a collection of information unless it displays a valid OMB control number.

TRANSMITTAL FORM (to be used for all correspondence after initial filing)		
	Application Number	15/061,774
	Filing Date	March 4, 2016
	First Named Inventor	Wesley Scott Harper
	Art Unit	1631
	Examiner Name	Jerry Lin
Total Number of Pages in This Submission: 11	Attorney Docket Number	A0130.0090.C1C1

ENCLOSURES (Check all that apply)

After Allowance Communication to TC

PTO/AIA/26 (04-13)
Approved for use through 04/30/2013. OMB 0651-0031
U.S. Patent and Trademark Office; U.S. DEPARTMENT OF COMMERCE
Under the Paperwork Reduction Act of 1995, no persons are required to respond to a collection of information unless it displays a valid OMB control number.

TERMINAL DISCLAIMER TO OBVIATE A DOUBLE PATENTING REJECTION OVER A "PRIOR" PATENT	Docket Number (Optional) A0130.0090.C1C1

In re Application of: Wesley Scott Harper

Application No.: 15/061,774

Filed: March 4, 2016

For: METHODS AND SYSTEMS FOR EARLY SIGNAL ATTENUATION DETECTION AND PROCESSING

The applicant, Abbott Diabetes Care Inc., owner of 100 percent interest in the instant application hereby disclaims, except as provided below, the terminal part of the statutory term of any patent granted on the instant application which would extend beyond the expiration date of the full statutory term of **prior patent** No. 9,310,230 as the term of said **prior patent** is presently shortened by any terminal disclaimer. The applicant hereby agrees that any patent so granted on the instant application shall be enforceable only for any during such period that it and the **prior patent** are commonly owned. This agreement runs with any patent granted on the instant application and is binding upon the grantee, its successors or assigns.

In making the above disclaimer, the applicant does not disclaim the terminal part of the term of any patent granted on the instant application that would extend to the expiration date of the full statutory term of the **prior patent**, "as the term of said **prior patent** is presently shortened by any terminal disclaimer," in the event that said **prior patent** later:

expires for failure to pay a maintenance fee;
is held unenforceable;
is found invalid by a court of competent jurisdiction;
is statutorily disclaimed in whole or terminally disclaimed under 37 CFR 1.321;
has all claims canceled by a reexamination certificate;
is reissued; or
is in any manner terminated prior to the expiration of its full statutory term as presently shortened by any terminal disclaimer.

Check either box 1 or 2 below, if appropriate.

1. ☐ The undersigned is the applicant. If the applicant is an assignee, the undersigned is authorized to act on behalf of the assignee.

I hereby acknowledge that any willful false statements made are punishable under 18 U.S.C. 1001 by fine or imprisonment of not more than five (5) years, or both.

2. ☑ The undersigned is an attorney or agent of record. Reg. No. 50,756

/Mark Stirrat/	August 16, 2018
Signature	Date
Mark Stirrat	
Typed or printed name	
Attorney for Applicant	949.502.2870
Title	Telephone Number

☑ Terminal disclaimer fee under 37 CFR 1.20(d) included.

WARNING: Information on this form may become public. Credit card information should not be included on this form. Provide credit card information and authorization on PTO-2038.

This collection of information is required by 37 CFR 1.321. The information is required to obtain or retain a benefit by the public which is to file (and by the USPTO to process) an application. Confidentiality is governed by 35 U.S.C. 122 and 37 CFR 1.11 and 1.14. This collection is estimated to take 12 minutes to complete, including gathering, preparing, and submitting the completed application form to the USPTO. Time will vary depending upon the individual case. Any comments on the amount of time you require to complete this form and/or suggestions for reducing this burden, should be sent to the Chief Information Officer, U.S. Patent and Trademark Office, U.S. Department of Commerce, P.O. Box 1450, Alexandria, VA 22313-1450. DO NOT SEND FEES OR COMPLETED FORMS TO THIS ADDRESS. **SEND TO: Commissioner for Patents, P.O. Box 1450, Alexandria, VA 22313-1450.**

If you need assistance in completing the form, call 1-800-PTO-9199 and select option 2.

08/23/2018 SSANDAR1 00000012 15061774
02 FC:1814 160.00 OP

UNITED STATES PATENT AND TRADEMARK OFFICE

UNITED STATES DEPARTMENT OF COMMERCE
United States Patent and Trademark Office
Address: COMMISSIONER FOR PATENTS
P.O. Box 1450
Alexandria, Virginia 22313-1450
www.uspto.gov

APPLICATION NUMBER	FILING OR 371(C) DATE	FIRST NAMED APPLICANT	ATTY. DOCKET NO./TITLE
15/061,774	03/04/2016	Wesley Scott Harper	A0130.0090.C1C1

CONFIRMATION NO. 5923

POA ACCEPTANCE LETTER

95508
One LLP
4000 MacArthur Blvd.
East Tower, Suite 500
Newport Beach, CA 92660

OC000000099685818

Date Mailed: 05/22/2018

NOTICE OF ACCEPTANCE OF POWER OF ATTORNEY

This is in response to the Power of Attorney filed 05/17/2018.

The Power of Attorney in this application is accepted. Correspondence in this application will be mailed to the above address as provided by 37 CFR 1.33.

Questions about the contents of this notice and the requirements it sets forth should be directed to the Office of Data Management, Application Assistance Unit, at **(571) 272-4000** or **(571) 272-4200** or **1-888-786-0101**.

/agizaw/

UNITED STATES PATENT AND TRADEMARK OFFICE

UNITED STATES DEPARTMENT OF COMMERCE
United States Patent and Trademark Office
Address: COMMISSIONER FOR PATENTS
P.O. Box 1450
Alexandria, Virginia 22313-1450
www.uspto.gov

APPLICATION NO.	FILING DATE	FIRST NAMED INVENTOR	ATTORNEY DOCKET NO.	CONFIRMATION NO.
15/061,774	03/04/2016	Wesley Scott Harper	A0130.0090.C1C1	5923

95508 7590 05/17/2018
One LLP
4000 MacArthur Blvd.
East Tower, Suite 500
Newport Beach, CALIFORNIA 92660
UNITED STATES OF AMERICA

EXAMINER
LIN, JERRY

ART UNIT	PAPER NUMBER
1631	

NOTIFICATION DATE	DELIVERY MODE
05/17/2018	ELECTRONIC

Please find below and/or attached an Office communication concerning this application or proceeding.

The time period for reply, if any, is set in the attached communication.

Notice of the Office communication was sent electronically on above-indicated "Notification Date" to the following e-mail address(es):

IPdocketing@onellp.com
PAIRgroup@onellp.com
onellpdocketing@onellp.com

PTOL-90A (Rev. 04/07)

Office Action Summary	Application No. 15/061,774	Applicant(s) Harper, Wesley Scott	
	Examiner JERRY LIN	Art Unit 1631	AIA Status No

-- The MAILING DATE of this communication appears on the cover sheet with the correspondence address --

Period for Reply

A SHORTENED STATUTORY PERIOD FOR REPLY IS SET TO EXPIRE 3 MONTHS FROM THE MAILING DATE OF THIS COMMUNICATION.

- Extensions of time may be available under the provisions of 37 CFR 1.136(a). In no event, however, may a reply be timely filed after SIX (6) MONTHS from the mailing date of this communication.
- If NO period for reply is specified above, the maximum statutory period will apply and will expire SIX (6) MONTHS from the mailing date of this communication.
- Failure to reply within the set or extended period for reply will, by statute, cause the application to become ABANDONED (35 U.S.C. § 133). Any reply received by the Office later than three months after the mailing date of this communication, even if timely filed, may reduce any earned patent term adjustment. See 37 CFR 1.704(b).

Status

1)☑ Responsive to communication(s) filed on 04 March 2016.

☐ A declaration(s)/affidavit(s) under **37 CFR 1.130(b)** was/were filed on _____.

2a)☐ This action is **FINAL.** 2b) ☑ This action is non-final.

3)☐ An election was made by the applicant in response to a restriction requirement set forth during the interview on _____; the restriction requirement and election have been incorporated into this action.

4)☐ Since this application is in condition for allowance except for formal matters, prosecution as to the merits is closed in accordance with the practice under *Ex parte Quayle*, 1935 C.D. 11, 453 O.G. 213.

Disposition of Claims*

5) ☑ Claim(s) 23-40 is/are pending in the application.

5a) Of the above claim(s) _____ is/are withdrawn from consideration.

6) ☐ Claim(s) _____ is/are allowed.

7) ☑ Claim(s) 23-40 is/are rejected.

8) ☐ Claim(s) _____ is/are objected to.

9) ☐ Claim(s) _____ are subject to restriction and/or election requirement

* If any claims have been determined allowable, you may be eligible to benefit from the **Patent Prosecution Highway** program at a participating intellectual property office for the corresponding application. For more information, please see http://www.uspto.gov/patents/init_events/pph/index.jsp or send an inquiry to **PPHfeedback@uspto.gov.**

Application Papers

10)☐ The specification is objected to by the Examiner.

11)☐ The drawing(s) filed on _____ is/are: a)☐ accepted or b)☐ objected to by the Examiner.

Applicant may not request that any objection to the drawing(s) be held in abeyance. See 37 CFR 1.85(a).

Replacement drawing sheet(s) including the correction is required if the drawing(s) is objected to. See 37 CFR 1.121(d).

Priority under 35 U.S.C. § 119

12)☐ Acknowledgment is made of a claim for foreign priority under 35 U.S.C. § 119(a)-(d) or (f).

Certified copies:

a)☐ All b)☐ Some** c)☐ None of the:

1.☐ Certified copies of the priority documents have been received.

2.☐ Certified copies of the priority documents have been received in Application No. _____.

3.☐ Copies of the certified copies of the priority documents have been received in this National Stage application from the International Bureau (PCT Rule 17.2(a)).

** See the attached detailed Office action for a list of the certified copies not received.

Attachment(s)

1) ☐ Notice of References Cited (PTO-892)

2) ☑ Information Disclosure Statement(s) (PTO/SB/08a and/or PTO/SB/08b) Paper No(s)/Mail Date 3/4/16.

3) ☐ Interview Summary (PTO-413) Paper No(s)/Mail Date _____.

4) ☐ Other: _____.

DETAILED ACTION

Notice of Pre-AIA or AIA Status

1. The present application is being examined under the pre-AIA first to invent provisions.

Status of the Claims

Claims 23-40 are under examination.

Double Patenting

2. The nonstatutory double patenting rejection is based on a judicially created doctrine grounded in public policy (a policy reflected in the statute) so as to prevent the unjustified or improper timewise extension of the "right to exclude" granted by a patent and to prevent possible harassment by multiple assignees. A nonstatutory double patenting rejection is appropriate where the conflicting claims are not identical, but at least one examined application claim is not patentably distinct from the reference claim(s) because the examined application claim is either anticipated by, or would have been obvious over, the reference claim(s). See, e.g., *In re Berg*, 140 F.3d 1428, 46 USPQ2d 1226 (Fed. Cir. 1998); *In re Goodman*, 11 F.3d 1046, 29 USPQ2d 2010 (Fed. Cir. 1993); *In re Longi*, 759 F.2d 887, 225 USPQ 645 (Fed. Cir. 1985); *In re Van Ornum*, 686 F.2d 937, 214 USPQ 761 (CCPA 1982); *In re Vogel*, 422 F.2d 438, 164 USPQ 619 (CCPA 1970); *In re Thorington*, 418 F.2d 528, 163 USPQ 644 (CCPA 1969).

A timely filed terminal disclaimer in compliance with 37 CFR 1.321(c) or 1.321(d) may be used to overcome an actual or provisional rejection based on nonstatutory double patenting provided the reference application or patent either is shown to be commonly owned with the examined application, or claims an invention made as a result of activities undertaken within the scope of a joint research agreement. See MPEP § 717.02 for applications subject to examination under the first inventor to file provisions of the AIA as explained in MPEP § 2159. See MPEP §§ 706.02(l)(1) - 706.02(l)(3) for applications not subject to examination under the first inventor to file provisions of the AIA. A terminal disclaimer must be signed in compliance with 37 CFR 1.321(b).

The USPTO Internet website contains terminal disclaimer forms which may be used. Please visit www.uspto.gov/patent/patents-forms. The filing date of the application in which the form is filed

determines what form (e.g., PTO/SB/25, PTO/SB/26, PTO/AIA/25, or PTO/AIA/26) should be used. A web-based eTerminal Disclaimer may be filled out completely online using web-screens. An eTerminal Disclaimer that meets all requirements is auto-processed and approved immediately upon submission. For more information about eTerminal Disclaimers, refer to www.uspto.gov/patents/process/file/efs/guidance/eTD-info-I.jsp.

3. Claims 23-40 are rejected on the ground of nonstatutory double patenting as being unpatentable over claims 1-20 of U.S. Patent No. 9,310,230. Although the claims at issue are not identical, they are not patentably distinct from each other. The instant claims differ from the U.S. Patent in that the instant claims recite “early signal attenuation condition”, whereas the U.S. Patent recites an “adverse condition”. However, signal attenuation may be interpreted as a form of an adverse condition effecting an analyte monitoring system. Thus, the subject matter of the instant claims is encompassed by the scope of the U.S. Patent. The instant claims are not patentably distinct from the U.S. Patent.

4. Claims 23-40 are rejected on the ground of nonstatutory double patenting as being unpatentable over claims 1-22 of U.S. Patent No. 8,483,967. Although the claims at issue are not identical, they are not patentably distinct from each other. The instant claims differ from the U.S. Patent in that the instant claims recite “early signal attenuation condition”, whereas the U.S. Patent recites an “adverse condition”. However, signal attenuation may be interpreted as a form of an adverse condition effecting an analyte monitoring system. Thus, the subject matter of the instant claims is encompassed by the scope of the U.S. Patent. The instant claims are not patentably distinct from the U.S. Patent.

Contact Information

Any inquiry concerning this communication or earlier communications from the examiner should be directed to JERRY LIN whose telephone number is (571)272-2561. The examiner can normally be reached on M, Tu, Th, F, 5:30am-4pm.

Examiner interviews are available via telephone, in-person, and video conferencing using a USPTO supplied web-based collaboration tool. To schedule an interview, applicant is encouraged to use the USPTO Automated Interview Request (AIR) at http://www.uspto.gov/interviewpractice.

If attempts to reach the examiner by telephone are unsuccessful, the examiner's supervisor, Peter Paras can be reached on (571) 272-4517. The fax phone number for the organization where this application or proceeding is assigned is 571-273-8300.

Information regarding the status of an application may be obtained from the Patent Application Information Retrieval (PAIR) system. Status information for published applications may be obtained from either Private PAIR or Public PAIR. Status information for unpublished applications is available through Private PAIR only. For more information about the PAIR system, see http://pair-direct.uspto.gov. Should you have questions on access to the Private PAIR system, contact the Electronic Business Center (EBC) at 866-217-9197 (toll-free). If you would like assistance from a USPTO Customer Service Representative or access to the automated information system, call 800-786-9199 (IN USA OR CANADA) or 571-272-1000.

/JERRY LIN/
Primary Examiner, Art Unit 1631

Search Notes	Application/Control No.	Applicant(s)/Patent Under Reexamination
	15/061,774	Harper, Wesley Scott
	Examiner	**Art Unit**
	JERRY LIN	1631

CPC - Searched*		
Symbol	**Date**	**Examiner**

CPC Combination Sets - Searched*		
Symbol	**Date**	**Examiner**

US Classification - Searched*			
Class	**Subclass**	**Date**	**Examiner**

* See search history printout included with this form or the SEARCH NOTES box below to determine the scope of the search.

Search Notes		
Search Notes	**Date**	**Examiner**
See Printout	05/14/2018	JL
Inventor Search of Harper in PALM	05/14/2018	JL

Interference Search			
US Class/CPC Symbol	**US Subclass/CPC Group**	**Date**	**Examiner**

STN

```
(FILE 'HOME' ENTERED AT 06:08:34 ON 14 MAY 2018)

 FILE 'MEDLINE, EMBASE, BIOSIS, COMPUSCIENCE' ENTERED AT 06:08:47 ON 14
 MAY 2018
L1         2045 S SENSOR AND ATTENUATION
L2           39 S L1 AND (GAP OR PAUSE OR REMOVE)
L3           24 DUP REM L2 (15 DUPLICATES REMOVED)
L4          324 S L1 AND (MONITOR OR ASSAY OR ARRAY OR MICROARRAY OR ANALYTE)
L5          120 S L4 AND TIME
L6           84 DUP REM L5 (36 DUPLICATES REMOVED)
```

WEST Search History for Application 15061774

Creation Date: 2018051406:07

Prior Art Searches

Query	DB	Hits	Op.	Plur.	Thes.	Date
9310230.pn. or 8483967.pn.	PGPB, USPT	2	OR	YES		05-14-2018
sensor same attenuation	PGPB, USPT	20678	OR	YES		05-14-2018
(sensor same attenuation) and (monitor or assay or array or microarray or analyte)	PGPB, USPT	14820	OR	YES		05-14-2018
(sensor same attenuation) same (gap or pause or remove)	PGPB, USPT	758	OR	YES		05-14-2018
(sensor same attenuation same (gap or pause or remove)) and (monitor or assay or array or microarray or analyte)	PGPB, USPT	531	OR	YES		05-14-2018
(sensor same attenuation same (gap or pause or remove)) same time	PGPB, USPT	178	OR	YES		05-14-2018
(sensor same attenuation same (gap or pause or remove) same time) and (monitor or assay or array or microarray or analyte)	PGPB, USPT	119	OR	YES		05-14-2018

PTO/SB/08 (09-08)
Approved for use through 10/31/2016. OMB 0651-0031
U.S. Patent and Trademark Office; U.S. DEPARTMENT OF COMMERCE
Under the Paperwork Reduction Act of 1995, no persons are required to respond to a collection of information unless it contains a valid OMB control number.

Substitute for form 1449/PTO

INFORMATION DISCLOSURE STATEMENT BY APPLICANT

(Use as many sheets as necessary)

	Complete if Known
Application Number	To be assigned
Filing Date	March 4, 2016
First Named Inventor	Wesley Scott Harper
Art Unit	To be assigned
Examiner Name	To be assigned

Sheet	1	of	21	Attorney Docket No: A0130.0090.C1C1

US PATENT DOCUMENTS

Examiner Initials*	Cite No.	Document Number Number-Kind Code	Publication Date MM-DD-YYYY	Name of Patentee or Applicant of Cited Document	Pages, Columns, Lines, Where Relevant Passages or Relevant Figures Appear
		3,581,062	05-21-1971	Aston	
		3,926,760	12-16-1975	Allen, et al.	
		3,949,388	04-06-1976	Fuller	
		4,036,749	07-19-1977	Anderson	
		4,055,175	10-25-1977	Clemens, et al.	
		4,129,128	12-12-1978	McFarlane	
		4,245,634	01-20-1981	Albisser, et al.	
		4,327,725	05-04-1982	Cortese, et al.	
		4,344,438	08-17-1982	Schultz	
		4,349,728	09-14-1982	Phillips, et al.	
		4,425,920	01-17-1984	Bourland, et al.	
		4,441,968	04-10-1984	Emmer, et al.	
		4,464,170	08-07-1984	Clemens, et al.	
		4,478,976	10-23-1984	Goertz, et al.	
		4,494,950	01-22-1985	Fischell	
		4,509,531	04-09-1985	Ward	
		4,527,240	07-02-1985	Kvitash	
		4,538,616	09-03-1985	Rogoff	
		4,619,793	10-28-1986	Lee	
		4,671,288	06-09-1987	Gough	
		4,703,756	11-03-1987	Gough, et al.	
		4,731,726	03-15-1988	Allen, III	
		4,749,985	06-07-1988	Corsberg	
		4,757,022	07-12-1988	Shults, et al.	
		4,759,828	07-26-1988	Young, et al.	
		4,777,953	10-18-1988	Ash, et al.	
		4,779,618	10-25-1988	Mund, et al.	
		4,847,785	07-11-1989	Stephens	
		4,854,322	08-08-1989	Ash, et al.	
		4,890,620	01-02-1990	Gough	
		4,925,268	05-15-1990	Iyer, et al.	
		4,953,552	09-04-1990	DeMarzo	
		4,986,271	01-22-1991	Wilkins	
		4,995,402	02-26-1991	Smith, et al.	
		5,000,180	03-19-1991	Kuypers, et al.	
		5,002,054	03-26-1991	Ash, et al.	
		5,019,974	05-28-1991	Beckers	
		5,050,612	09-24-1991	Matsumura	
		5,051,688	09-24-1991	Murase, et al.	

EXAMINER **DATE CONSIDERED**

Substitute Disclosure Statement Form (PTO-1449)
* EXAMINER: Initial if reference considered, whether or not citation is in conformance with MPEP 609. Draw line through citation if not in conformance and not considered. Include copy of this form with next communication to applicant.1 Applicant's unique citation designation number (optional) 2 Applicant is to place a check mark here if English language Translation is attached

ALL REFERENCES CONSIDERED EXCEPT WHERE LINED THROUGH. /J.L/

PTO/SB/08 (09-08)
Approved for use through 10/31/2016. OMB 0651-0031
U.S. Patent and Trademark Office; U.S. DEPARTMENT OF COMMERCE
Under the Paperwork Reduction Act of 1995, no persons are required to respond to a collection of information unless it contains a valid OMB control number.

Substitute for form 1449/PTO

INFORMATION DISCLOSURE STATEMENT BY APPLICANT

(Use as many sheets as necessary)

Sheet	2	of	21

Complete if Known	
Application Number	To be assigned
Filing Date	March 4, 2016
First Named Inventor	Wesley Scott Harper
Art Unit	To be assigned
Examiner Name	To be assigned
Attorney Docket No: A0130.0090.C1C1	

US PATENT DOCUMENTS

Examiner Initials*	Cite No.	Document Number Number-Kind Code	Publication Date MM-DD-YYYY	Name of Patentee or Applicant of Cited Document	Pages, Columns, Lines, Where Relevant Passages or Relevant Figures Appear
		5,055,171	10-08-1991	Peck	
		5,082,550	01-21-1992	Rishpon, et al.	
		5,106,365	04-21-1992	Hernandez	
		5,122,925	06-16-1992	Inpyn	
		5,135,004	08-04-1992	Adams, et al.	
		5,165,407	11-24-1992	Wilson, et al.	
		5,202,261	04-13-1993	Musho, et al.	
		5,210,778	05-11-1993	Massart	
		5,228,449	07-20-1993	Christ, et al.	
		5,231,988	08-03-1993	Wernicke, et al.	
		5,246,867	09-21-1993	Lakowicz, et al.	
		5,251,126	10-05-1993	Kahn, et al.	
		5,262,035	11-16-1993	Gregg, et al.	
		5,262,305	11-16-1993	Heller, et al.	
		5,264,104	11-23-1993	Gregg, et al.	
		5,264,105	11-23-1993	Gregg, et al.	
		5,279,294	01-18-1994	Anderson, et al.	
		5,285,792	02-15-1994	Sjoquist, et al.	
		5,293,877	03-15-1994	O'Hara, et al.	
		5,299,571	04-05-1994	Mastrototaro	
		5,320,725	06-14-1994	Gregg, et al.	
		5,322,063	06-21-1994	Allen, et al.	
		5,340,722	08-23-1994	Wolfbeis, et al.	
		5,342,789	08-30-1994	Chick, et al.	
		5,356,786	10-18-1994	Heller, et al.	
		5,360,404	11-01-1994	Novacek, et al.	
		5,372,427	12-13-1994	Padovani, et al.	
		5,379,238	01-03-1995	Stark	
		5,3 84,547	01-24-1995	Lynk, et al.	
		5,390,671	02-21-1995	Lord, et al.	
		5,391,250	02-21-1995	Cheney, II, et al.	
		5,394,877	03-03-1995	Orr, et al.	
		5,402,780	04-04-1995	Faasse, Jr.	
		5,408,999	04-25-1995	Singh, et al.	
		5,410,326	04-25-1995	Goldstein	
		5,411,647	05-02-1995	Johnson, et al.	
		5,431,160	07-11-1995	Wilkins	
		5,431,921	07-11-1995	Thombre	
		5,462,645	10-31-1995	Albery, et al.	

EXAMINER **DATE CONSIDERED**

Substitute Disclosure Statement Form (PTO-1449)
* EXAMINER: Initial if reference considered, whether or not citation is in conformance with MPEP 609. Draw line through citation if not in conformance and not considered. Include copy of this form with next communication to applicant.1 Applicant's unique citation designation number (optional) 2 Applicant is to place a check mark here if English language Translation is attached

ALL REFERENCES CONSIDERED EXCEPT WHERE LINED THROUGH. /J.L/

PTO/SB/08 (09-08)
Approved for use through 10/31/2016. OMB 0651-0031
U.S. Patent and Trademark Office; U.S. DEPARTMENT OF COMMERCE
Under the Paperwork Reduction Act of 1995, no persons are required to respond to a collection of information unless it contains a valid OMB control number.

Substitute for form 1449/PTO

INFORMATION DISCLOSURE STATEMENT BY APPLICANT

(Use as many sheets as necessary)

	Complete if Known
Application Number	To be assigned
Filing Date	March 4, 2016
First Named Inventor	Wesley Scott Harper
Art Unit	To be assigned
Examiner Name	To be assigned

Sheet	3	of	21	Attorney Docket No: A0130.0090.C1C1

US PATENT DOCUMENTS

Examiner Initials*	Cite No.	Document Number Number-Kind Code	Publication Date MM-DD-YYYY	Name of Patentee or Applicant of Cited Document	Pages, Columns, Lines, Where Relevant Passages or Relevant Figures Appear
		5,472,317	12-05-1995	Field, et al.	
		5,489,414	02-06-1996	Schreiber, et al.	
		5,497,772	03-12-1996	Schulman, et al.	
		5,507,288	04-16-1996	Bocker, et al.	
		5,509,410	04-23-1996	Hill, et al.	
		5,514,718	05-07-1996	Lewis, et al.	
		5,531,878	07-02-1996	Vadgama, et al.	
		5,552,997	09-03-1996	Massart	
		5,568,806	10-29-1996	Cheney, II, et al.	
		5,569,186	10-29-1996	Lord, et al.	
		5,582,184	12-10-1996	Erickson, et al.	
		5,586,553	12-24-1996	Halili, et al.	
		5,593,852	01-14-1997	Heller, et al.	
		5,601,435	02-11-1997	Quv	
		5,609,575	03-11-1997	Larson, et al.	
		5,628,310	05-13-1997	Rao, et al.	
		5,640,954	06-24-1997	Pfeiffer, et al.	
		5,653,239	08-05-1997	Pompei, et al.	
		5,665,222	09-09-1997	Heller, et al.	
		5,711,001	01-20-1998	Bussan, et al.	
		5,711,861	01-27-1998	Ward, et al.	
		5,726,646	03-10-1998	Bane, et al.	
		5,735,285	04-07-1998	Albert, et al.	
		5,748,103	05-05-1998	Flach, et al.	
		5,771,891	06-30-1998	Gozani	
		5,772,586	06-30-1998	Heinonen, et al.	
		5,791,344	08-11-1998	Schulman, et al.	
		5,807,375	09-15-1998	Gross, et al.	
		5,875,186	02-23-1999	Belanger, et al.	
		5,899,855	05-04-1999	Brown	
		5,914,026	06-22-1999	Blubaugh, Jr., et al.	
		5,925,021	07-20-1999	Castellano, et al.	
		5,942,979	08-24-1999	Luppino	
		5,951,521	09-14-1999	Mastrototaro, et al.	
		5,957,854	09-28-1999	Besson, et al.	
		5,961,451	10-05-1999	Reber, et al.	
		5,964,993	10-12-1999	Blubaugh, Jr., et al.	
		5,965,380	10-12-1999	Heller, et al.	
		5,971,922	10-26-1999	Arita, et al.	

EXAMINER **DATE CONSIDERED**

Substitute Disclosure Statement Form (PTO-1449)
* EXAMINER: Initial if reference considered, whether or not citation is in conformance with MPEP 609. Draw line through citation if not in conformance and not considered. Include copy of this form with next communication to applicant.1 Applicant's unique citation designation number (optional) 2 Applicant is to place a check mark here if English language Translation is attached

ALL REFERENCES CONSIDERED EXCEPT WHERE LINED THROUGH. /J.L/

PTO/SB/08 (09-08)
Approved for use through 10/31/2016. OMB 0651-0031
U.S. Patent and Trademark Office; U.S. DEPARTMENT OF COMMERCE
Under the Paperwork Reduction Act of 1995, no persons are required to respond to a collection of information unless it contains a valid OMB control number.

Substitute for form 1449/PTO

INFORMATION DISCLOSURE STATEMENT BY APPLICANT

(Use as many sheets as necessary)

	Complete if Known
Application Number	To be assigned
Filing Date	March 4, 2016
First Named Inventor	Wesley Scott Harper
Art Unit	To be assigned
Examiner Name	To be assigned

Sheet	4	of	21	Attorney Docket No: A0130.0090.C1C1

US PATENT DOCUMENTS

Examiner Initials*	Cite No.	Document Number Number-Kind Code	Publication Date MM-DD-YYYY	Name of Patentee or Applicant of Cited Document	Pages, Columns, Lines, Where Relevant Passages or Relevant Figures Appear
		5,972,199	10-26-1999	Heller, et al.	
		5,987,353	11-16-1999	Khatchatrian, et al.	
		5,995,860	11-30-1999	Sun, et al.	
		6,001,067	12-14-1999	Shults, et al.	
		6,004,278	12-21-1999	Botich, et al.	
		6,022,315	02-09-2000	Iliff	
		6,024,699	02-15-2000	Surwit, et al.	
		6,028,413	02-22-2000	Brockmann	
		6,049,727	04-11-2000	Crothall	
		6,052,565	04-18-2000	Ishikura, et al.	
		6,066,243	05-23-2000	Anderson, et al.	
		6,083,710	07-04-2000	Heller, et al.	
		6,088,608	07-11-2000	Schulman, et al.	
		6,091,975	07-18-2000	Daddona, et al.	
		6,091,976	07-18-2000	Pfeiffer, et al.	
		6,093,172	07-25-2000	Funderburk, et al.	
		6,096,364	08-01-2000	Bok, et al.	
		6,103,033	08-15-2000	Say, et al.	
		6,117,290	09-12-2000	Say, et al.	
		6,119,028	09-12-2000	Schulman, et al.	
		6,120,676	09-19-2000	Heller, et al.	
		6,121,009	09-19-2000	Heller, et al.	
		6,121,611	09-19-2000	Lindsay, et al.	
		6,122,351	09-19-2000	Schlueter, Jr., et al.	
		6,129,823	10-10-2000	Hughes, et al.	
		6,134,461	10-17-2000	Say, et al.	
		6,141,573	10-31-2000	Kurnik, et al.	
		6,143,164	11-07-2000	Heller, et al.	
		6,159,147	12-12-2000	Lichter, et al.	
		6,162,611	12-19-2000	Heller, et al.	
		6,175,752	01-16-2001	Say, et al.	
		6,200,265	03-13-2001	Walsh, et al.	
		6,212,416	04-03-2001	Ward, et al.	
		6,219,574	04-17-2001	Cormier, et al.	
		6,248,067	06-19-2001	Causey, III, et al.	
		6,254,586	07-03-2001	Mann, et al.	
		6,270,455	08-07-2001	Brown	
		6,275,717	08-14-2001	Gross, et al.	
		6,283,761	09-04-2001	Joao	

EXAMINER **DATE CONSIDERED**

Substitute Disclosure Statement Form (PTO-1449)
* EXAMINER: Initial if reference considered, whether or not citation is in conformance with MPEP 609. Draw line through citation if not in conformance and not considered. Include copy of this form with next communication to applicant.1 Applicant's unique citation designation number (optional) 2 Applicant is to place a check mark here if English language Translation is attached

ALL REFERENCES CONSIDERED EXCEPT WHERE LINED THROUGH. /J.L/

PTO/SB/08 (09-08)
Approved for use through 10/31/2016. OMB 0651-0031
U.S. Patent and Trademark Office; U.S. DEPARTMENT OF COMMERCE
Under the Paperwork Reduction Act of 1995, no persons are required to respond to a collection of information unless it contains a valid OMB control number.

Substitute for form 1449/PTO

INFORMATION DISCLOSURE STATEMENT BY APPLICANT

(Use as many sheets as necessary)

	Complete if Known
Application Number	To be assigned
Filing Date	March 4, 2016
First Named Inventor	Wesley Scott Harper
Art Unit	To be assigned
Examiner Name	To be assigned

Sheet	5	of	21	Attorney Docket No: A0130.0090.C1C1

US PATENT DOCUMENTS

Examiner Initials*	Cite No.	Document Number Number-Kind Code	Publication Date MM-DD-YYYY	Name of Patentee or Applicant of Cited Document	Pages, Columns, Lines, Where Relevant Passages or Relevant Figures Appear
		6,284,478	09-04-2001	Heller, et al.	
		6,293,925	09-25-2001	Safabash, et al.	
		6,295,506	09-25-2001	Heinonen, et al.	
		6,306,104	10-23-2001	Cunningham, et al.	
		6,309,884	10-30-2001	Cooperet al.	
		6,314,317	11-06-2001	Willis	
		6,329,161	12-11-2001	Helleret al.	
		6,348,640	02-19-2002	Navot, et al.	
		6,359,270	03-19-2002	Bridson	
		6,359,444	03-19-2002	Grimes	
		6,360,888	03-26-2002	McIvor, et al.	
		6,366,794	04-02-2002	Moussy, et al.	
		6,377,828	04-23-2002	Chaiken, et al.	
		6,379,301	04-30-2002	Worthington, et al.	
		6,418,332	07-09-2002	Mastrototaro, et al.	
		6,424,847	07-23-2002	Mastrototaro, et al.	
		6,427,088	07-30-2002	Bowman, IV, et al.	
		6,440,068	08-27-2002	Brown, et al.	
		6,471,689	10-29-2002	Joseph, et al.	
		6,478,736	11-12-2002	Mault	
		6,484,045	11-19-2002	Holker, et al.	
		6,484,046	11-19-2002	Say, et al.	
		6,493,069	12-10-2002	Nagashimada, et al.	
		6,498,043	12-24-2002	Schulman, et al.	
		6,514,718	02-04-2003	Heller, et al.	
		6,546,268	04-08-2003	Ishikawa, et al.	
		6,551,494	04-22-2003	Heller, et al.	
		6,554,798	04-29-2003	Mann, et al.	
		6,558,321	05-06-2003	Burd, et al.	
		6,558,351	05-06-2003	Steil, et al.	
		6,560,471	05-06-2003	Heller, et al.	
		6,561,978	05-13-2003	Conn, et al.	
		6,562,001	05-13-2003	Lebel, et al.	
		6,564,105	05-13-2003	Starkweather, et al.	
		6,565,509	05-20-2003	Say, et al.	
		6,571,128	05-27-2003	Lebel, et al.	
		6,572,542	06-03-2003	Houben, et al.	
		6,574,490	06-03-2003	Abbink, et al.	
		6,576,101	06-10-2003	Heller, et al.	

EXAMINER **DATE CONSIDERED**

Substitute Disclosure Statement Form (PTO-1449)
* EXAMINER: Initial if reference considered, whether or not citation is in conformance with MPEP 609. Draw line through citation if not in conformance and not considered. Include copy of this form with next communication to applicant.1 Applicant's unique citation designation number (optional) 2 Applicant is to place a check mark here if English language Translation is attached

ALL REFERENCES CONSIDERED EXCEPT WHERE LINED THROUGH. /J.L/

PTO/SB/08 (09-08)
Approved for use through 10/31/2016. OMB 0651-0031
U.S. Patent and Trademark Office; U.S. DEPARTMENT OF COMMERCE
Under the Paperwork Reduction Act of 1995, no persons are required to respond to a collection of information unless it contains a valid OMB control number.

Substitute for form 1449/PTO

INFORMATION DISCLOSURE STATEMENT BY APPLICANT

(Use as many sheets as necessary)

	Complete if Known
Application Number	To be assigned
Filing Date	March 4, 2016
First Named Inventor	Wesley Scott Harper
Art Unit	To be assigned
Examiner Name	To be assigned

Sheet	6	of	21	Attorney Docket No: A0130.0090.C1C1

US PATENT DOCUMENTS

Examiner Initials*	Cite No.	Document Number Number-Kind Code	Publication Date MM-DD-YYYY	Name of Patentee or Applicant of Cited Document	Pages, Columns, Lines, Where Relevant Passages or Relevant Figures Appear
		6,577,899	06-10-2003	Lebel, et al.	
		6,579,690	06-17-2003	Bonnecaze, et al.	
		6,585,644	07-01-2003	Lebel, et al.	
		6,591,125	07-08-2003	Buse, et al.	
		6,595,919	07-22-2003	Bemer, et al.	
		6,605,200	08-12-2003	Mao, et al.	
		6,605,201	08-12-2003	Mao, et al.	
		6,607,509	08-19-2003	Bobroff, et al.	
		6,610,012	08-26-2003	Mault	
		6,633,772	10-14-2003	Ford, et al.	
		6,635,014	10-21-2003	Starkweather, et al.	
		6,648,821	11-18-2003	Lebel, et al.	
		6,654,625	11-25-2003	Say, et al.	
		6,658,396	12-02-2003	Tang, et al.	
		6,659,948	12-09-2003	Lebel, et al.	
		6,668,196	12-23-2003	Villegas, et al.	
		6,675,030	01-06-2004	Ciurczak, et al.	
		6,676,816	01-13-2004	Mao, et al.	
		6,687,546	02-03-2004	Lebel, et al.	
		6,689,056	02-10-2004	Kilcoyne, et al.	
		6,694,191	02-17-2004	Starkweather, et al.	
		6,695,860	02-24-2004	Ward, et al.	
		6,702,857	03-09-2004	Brauker, et al.	
		6,733,446	05-11-2004	Lebel, et al.	
		6,740,075	05-25-2004	Lebel, et al.	
		6,741,877	05-25-2004	Shults, et al.	
		6,743,635	06-01-2004	Neel, et al.	
		6,746,582	06-08-2004	Heller, et al.	
		6,758,810	07-06-2004	Lebel, et al.	
		6,770,030	08-03-2004	Schaupp, et al.	
		6,789,195	09-07-2004	Prihoda, et al.	
		6,790,178	09-14-2004	Mault, et al.	
		6,809,653	10-26-2004	Mann, et al.	
		6,810,290	10-26-2004	Lebel, et al.	
		6,811,533	11-02-2004	Lebel, et al.	
		6,811,534	11-02-2004	Bowman, IV, et al.	
		6,813,519	11-02-2004	Lebel, et al.	
		6,837,858	01-04-2005	Cunningham, et al.	
		6,862,465	03-01-2005	Shults, et al.	

EXAMINER **DATE CONSIDERED**

Substitute Disclosure Statement Form (PTO-1449)
* EXAMINER: Initial if reference considered, whether or not citation is in conformance with MPEP 609. Draw line through citation if not in conformance and not considered. Include copy of this form with next communication to applicant.1 Applicant's unique citation designation number (optional) 2 Applicant is to place a check mark here if English language Translation is attached

ALL REFERENCES CONSIDERED EXCEPT WHERE LINED THROUGH. /J.L/

PTO/SB/08 (09-08)
Approved for use through 10/31/2016. OMB 0651-0031
U.S. Patent and Trademark Office; U.S. DEPARTMENT OF COMMERCE
Under the Paperwork Reduction Act of 1995, no persons are required to respond to a collection of information unless it contains a valid OMB control number.

Substitute for form 1449/PTO

INFORMATION DISCLOSURE STATEMENT BY APPLICANT

(Use as many sheets as necessary)

	Complete if Known
Application Number	To be assigned
Filing Date	March 4, 2016
First Named Inventor	Wesley Scott Harper
Art Unit	To be assigned
Examiner Name	To be assigned

Sheet	7	of	21	Attorney Docket No: A0130.0090.C1C1

US PATENT DOCUMENTS

Examiner Initials*	Cite No.	Document Number Number-Kind Code	Publication Date MM-DD-YYYY	Name of Patentee or Applicant of Cited Document	Pages, Columns, Lines, Where Relevant Passages or Relevant Figures Appear
		6,873,268	03-29-2005	Lebel, et al.	
		6,881,551	04-19-2005	Heller, et al.	
		6,892,085	05-10-2005	McIvor, et al.	
		6,895,265	05-17-2005	Silver	
		6,923,763	08-02-2005	Kovatchev, et al.	
		6,931,327	08-16-2005	Goode, Jr., et al.	
		6,932,894	08-23-2005	Mao, et al.	
		6,936,006	08-30-2005	Sabra	
		6,942,518	09-13-2005	Liamos, et al.	
		6,950,708	09-27-2005	Bowman, IV, et al.	
		6,958,705	10-25-2005	Lebel, et al.	
		6,968,294	11-22-2005	Gutta, et al.	
		6,971,274	12-06-2005	Olin	
		6,974,437	12-13-2005	Lebel, et al.	
		6,990,366	01-24-2006	Say, et al.	
		6,997,907	02-14-2006	Safabash, et al.	
		6,998,247	02-14-2006	Monfre, et al.	
		6,999,854	02-14-2006	Roth	
		7,003,336	02-21-2006	Holker, et al.	
		7,003,340	02-21-2006	Say, et al.	
		7,003,341	02-21-2006	Say, et al.	
		7,015,817	03-21-2006	Copley, et al.	
		7,016,713	03-21-2006	Gardner, et al.	
		7,024,245	04-04-2006	Lebel, et al.	
		7,025,774	04-11-2006	Freeman, et al.	
		7,027,848	04-11-2006	Robinson, et al.	
		7,027,931	04-11-2006	Jones, et al.	
		7,041,068	05-09-2006	Freeman, et al.	
		7,041,468	05-09-2006	Drucker, et al.	
		7,046,153	05-16-2006	Oja, et al.	
		7,052,483	05-30-2006	Woicik	
		7,056,302	06-06-2006	Douglas	
		7,074,307	07-11-2006	Simpson, et al.	
		7,081,195	07-25-2006	Simpson, et al.	
		7,092,891	08-15-2006	Maus, et al.	
		7,098,803	08-29-2006	Mann, et al.	
		7,108,778	09-19-2006	Simpson, et al.	
		7,110,803	09-19-2006	Shults, et al.	
		7,113,821	09-26-2006	Sun, et al.	

EXAMINER **DATE CONSIDERED**

Substitute Disclosure Statement Form (PTO-1449)
* EXAMINER: Initial if reference considered, whether or not citation is in conformance with MPEP 609. Draw line through citation if not in conformance and not considered. Include copy of this form with next communication to applicant.1 Applicant's unique citation designation number (optional) 2 Applicant is to place a check mark here if English language Translation is attached

ALL REFERENCES CONSIDERED EXCEPT WHERE LINED THROUGH. /J.L/

PTO/SB/08 (09-08)
Approved for use through 10/31/2016. OMB 0651-0031
U.S. Patent and Trademark Office; U.S. DEPARTMENT OF COMMERCE
Under the Paperwork Reduction Act of 1995, no persons are required to respond to a collection of information unless it contains a valid OMB control number.

Substitute for form 1449/PTO

INFORMATION DISCLOSURE STATEMENT BY APPLICANT

(Use as many sheets as necessary)

	Complete if Known
Application Number	To be assigned
Filing Date	March 4, 2016
First Named Inventor	Wesley Scott Harper
Art Unit	To be assigned
Examiner Name	To be assigned

Sheet	8	of	21	Attorney Docket No: A0130.0090.C1C1

US PATENT DOCUMENTS

Examiner Initials*	Cite No.	Document Number Number-Kind Code	Publication Date MM-DD-YYYY	Name of Patentee or Applicant of Cited Document	Pages, Columns, Lines, Where Relevant Passages or Relevant Figures Appear
		7,123,950	10-17-2006	Mannheimer	
		7,134,999	11-14-2006	Brauker, et al.	
		7,136,689	11-14-2006	Shults, et al.	
		7,153,265	12-26-2006	Vachon	
		7,155,290	12-26-2006	Von Arx, et al.	
		7,171,274	01-30-2007	Starkweather, et al.	
		7,179,226	02-20-2007	Crothall, et al.	
		7,190,988	03-13-2007	Say, et al.	
		7,192,450	03-20-2007	Brauker, et al.	
		7,198,606	04-03-2007	Boecker, et al.	
		7,207,974	04-24-2007	Safabash, et al.	
		7,226,442	06-05-2007	Sheppard, et al.	
		7,226,978	06-05-2007	Tapsak, et al.	
		7,276,029	10-02-2007	Goode, Jr., et al.	
		7,278,983	10-09-2007	Ireland, et al.	
		7,286,894	10-23-2007	Grant, et al.	
		7,299,082	11-20-2007	Feldman, et al.	
		7,310,544	12-18-2007	Brister, et al.	
		7,324,012	01-29-2008	Mann, et al.	
		7,329,239	02-12-2008	Safabash, et al.	
		7,364,592	04-29-2008	Carr-Brendel, et al.	
		7,366,556	04-29-2008	Brister, et al.	
		7,379,765	05-27-2008	Petisce, et al.	
		7,381,184	06-03-2008	Funderburk, et al.	
		7,402,153	07-22-2008	Steil, et al.	
		7,424,318	09-09-2008	Brister, et al.	
		7,429,258	09-30-2008	Angel, et al.	
		7,455,663	11-25-2008	Bikovsky	
		7,460,898	12-02-2008	Brister, et al.	
		7,462,264	12-09-2008	Heller, et al.	
		7,467,003	12-16-2008	Brister, et al.	
		7,471,972	12-30-2008	Rhodes, et al.	
		7,494,465	02-24-2009	Brister, et al.	
		7,497,827	03-03-2009	Brister, et al.	
		7,499,002	03-03-2009	Blasko, et al.	
		7,519,408	04-14-2009	Rasdal, et al.	
		7,583,990	09-01-2009	Goode, Jr., et al.	
		7,591,801	09-22-2009	Brauker, et al.	
		7,599,726	10-06-2009	Goode, Jr., et al.	

EXAMINER **DATE CONSIDERED**

Substitute Disclosure Statement Form (PTO-1449)
* EXAMINER: Initial if reference considered, whether or not citation is in conformance with MPEP 609. Draw line through citation if not in conformance and not considered. Include copy of this form with next communication to applicant.1 Applicant's unique citation designation number (optional) 2 Applicant is to place a check mark here if English language Translation is attached

ALL REFERENCES CONSIDERED EXCEPT WHERE LINED THROUGH. /J.L/

PTO/SB/08 (09-08)
Approved for use through 10/31/2016. OMB 0651-0031
U.S. Patent and Trademark Office; U.S. DEPARTMENT OF COMMERCE
Under the Paperwork Reduction Act of 1995, no persons are required to respond to a collection of information unless it contains a valid OMB control number.

Substitute for form 1449/PTO

INFORMATION DISCLOSURE STATEMENT BY APPLICANT

(Use as many sheets as necessary)

	Complete if Known
Application Number	To be assigned
Filing Date	March 4, 2016
First Named Inventor	Wesley Scott Harper
Art Unit	To be assigned
Examiner Name	To be assigned

Sheet	9	of	21	Attorney Docket No: A0130.0090.C1C1

US PATENT DOCUMENTS

Examiner Initials*	Cite No.	Document Number Number-Kind Code	Publication Date MM-DD-YYYY	Name of Patentee or Applicant of Cited Document	Pages, Columns, Lines, Where Relevant Passages or Relevant Figures Appear
		7,613,491	11-03-2009	Boock, et al.	
		7,615,007	11-10-2009	Shults, et al.	
		7,632,228	12-15-2009	Brauker, et al.	
		7,635,594	12-22-2009	Holmes, et al.	
		7,637,868	12-29-2009	Saint, et al.	
		7,640,048	12-29-2009	Dobbles, et al.	
		7,651,596	01-26-2010	Petisce, et al.	
		7,651,845	01-26-2010	Doyle, III, et al.	
		7,654,956	02-02-2010	Brister, et al.	
		7,657,297	02-02-2010	Simpson, et al.	
		7,697,967	04-13-2010	Stafford	
		7,699,775	04-20-2010	Desai, et al.	
		7,711,402	05-04-2010	Shults, et al.	
		7,713,574	05-11-2010	Brister, et al.	
		7,715,893	05-11-2010	Karnath, et al.	
		7,727,147	06-01-2010	Osorio, et al.	
		7,731,657	06-08-2010	Stafford	
		7,736,310	06-15-2010	Taub	
		7,736,344	06-15-2010	Moberg, et al.	
		7,763,042	07-27-2010	Iio, et al.	
		7,766,829	08-03-2010	Sloan, et al.	
		7,811,231	10-12-2010	Jin, et al.	
		7,813,809	10-12-2010	Strother, et al.	
		7,822,454	10-26-2010	Alden, et al.	
		7,889,069	02-15-2011	Fifolt, et al.	
		7,899,545	03-01-2011	John	
		7,914,460	03-29-2011	Melker, et al.	
		7,938,797	05-10-2011	Estes	
		7,941,200	05-10-2011	Weinert, et al.	
		7,946,985	05-24-2011	Mastrototaro, et al.	
		7,972,296	07-05-2011	Braig, et al.	
		7,976,466	07-12-2011	Ward, et al.	
		7,978,063	07-12-2011	Baldus, et al.	
		8,010,174	08-30-2011	Goode, Jr., et al.	
		8,010,256	08-30-2011	Oowada	
		8,192,394	06-05-2012	Estes, et al.	
		8,282,549	10-09-2012	Brauker, et al.	
		8,597,570	12-03-2013	Terashima, et al.	
		2001/0020124	09-06-2001	Tamada	

EXAMINER **DATE CONSIDERED**

Substitute Disclosure Statement Form (PTO-1449)
* EXAMINER: Initial if reference considered, whether or not citation is in conformance with MPEP 609. Draw line through citation if not in conformance and not considered. Include copy of this form with next communication to applicant.1 Applicant's unique citation designation number (optional) 2 Applicant is to place a check mark here if English language Translation is attached

ALL REFERENCES CONSIDERED EXCEPT WHERE LINED THROUGH. /J.L/

PTO/SB/08 (09-08)
Approved for use through 10/31/2016. OMB 0651-0031
U.S. Patent and Trademark Office; U.S. DEPARTMENT OF COMMERCE
Under the Paperwork Reduction Act of 1995, no persons are required to respond to a collection of information unless it contains a valid OMB control number.

Substitute for form 1449/PTO

INFORMATION DISCLOSURE STATEMENT BY APPLICANT

(Use as many sheets as necessary)

	Complete if Known
Application Number	To be assigned
Filing Date	March 4, 2016
First Named Inventor	Wesley Scott Harper
Art Unit	To be assigned
Examiner Name	To be assigned

Sheet	10	of	21	Attorney Docket No: A0130.0090.C1C1

US PATENT DOCUMENTS

Examiner Initials*	Cite No.	Document Number Number-Kind Code	Publication Date MM-DD-YYYY	Name of Patentee or Applicant of Cited Document	Pages, Columns, Lines, Where Relevant Passages or Relevant Figures Appear
		2001/0037060	11-01-2001	Thompson, et al.	
		2001/0037366	11-01-2001	Webb, et al.	
		2001/0047604	12-06-2001	Valiulis	
		2002/0019022	02-14-2002	Dunn, et al.	
		2002/0054320	05-09-2002	Ogino	
		2002/0095076	07-18-2002	Krausman, et al.	
		2002/0103499	08-01-2002	Perez, et al.	
		2002/0106709	08-08-2002	Potts, et al.	
		2002/0111832	08-15-2002	Judge	
		2002/0128594	09-12-2002	Das, et al.	
		2002/0133107	09-19-2002	Darcey	
		2002/0147135	10-10-2002	Schnell	
		2002/0161288	10-31-2002	Shin, et al.	
		2002/0788748	12-12-2002	Blackwell, et al.	
		2003/0005464	01-02-2003	Gropper, et al.	
		2003/0021729	01-30-2003	Moller, et al.	
		2003/0023461	01-30-2003	Quintanilla, et al.	
		2003/0028089	02-06-2003	Galley, et al.	
		2003/0060692	03-27-2003	Ruchti, et al.	
		2003/0060753	03-27-2003	Starkweather, et al.	
		2003/0114897	06-19-2003	Von Arx, et al.	
		2003/0147515	08-07-2003	Kai, et al.	
		2003/0163351	08-28-2003	Brown	
		2003/0168338	09-11-2003	Gao et al.	
		2003/0199790	10-23-2003	Boecker, et al.	
		2003/0208113	11-06-2003	Mault, et al.	
		2003/0212379	11-13-2003	Bylund, et al.	
		2004/0010207	01-15-2004	Flaherty, et al.	
		2004/0015102	01-22-2004	Cummings, et al.	
		2004/0041749	03-04-2004	Dixon	
		2004/0054263	03-18-2004	Moerman, et al.	
		2004/0060818	04-01-2004	Feldman, et al.	
		2004/0063435	04-01-2004	Sakamoto, et al.	
		2004/0064068	04-01-2004	DeNuzzio, et al.	
		2004/0073266	04-15-2004	Haefner, et al.	
		2004/0078215	04-22-2004	Dahlin, et al.	
		2004/0106858	06-03-2004	Say, et al.	
		2004/0122353	06-24-2004	Shahmirian, et al.	
		2004/0133390	07-08-2004	Osorio, et al.	

EXAMINER **DATE CONSIDERED**

Substitute Disclosure Statement Form (PTO-1449)
* EXAMINER: Initial if reference considered, whether or not citation is in conformance with MPEP 609. Draw line through citation if not in conformance and not considered. Include copy of this form with next communication to applicant.1 Applicant's unique citation designation number (optional) 2 Applicant is to place a check mark here if English language Translation is attached

ALL REFERENCES CONSIDERED EXCEPT WHERE LINED THROUGH. /J.L/

PTO/SB/08 (09-08)
Approved for use through 10/31/2016. OMB 0651-0031
U.S. Patent and Trademark Office; U.S. DEPARTMENT OF COMMERCE
Under the Paperwork Reduction Act of 1995, no persons are required to respond to a collection of information unless it contains a valid OMB control number.

Substitute for form 1449/PTO

INFORMATION DISCLOSURE STATEMENT BY APPLICANT

(Use as many sheets as necessary)

	Complete if Known
Application Number	To be assigned
Filing Date	March 4, 2016
First Named Inventor	Wesley Scott Harper
Art Unit	To be assigned
Examiner Name	To be assigned

Sheet	11	of	21	Attorney Docket No: A0130.0090.C1C1

US PATENT DOCUMENTS

Examiner Initials*	Cite No.	Document Number Number-Kind Code	Publication Date MM-DD-YYYY	Name of Patentee or Applicant of Cited Document	Pages, Columns, Lines, Where Relevant Passages or Relevant Figures Appear
		2004/0135684	07-15-2004	Steinthal, et al.	
		2004/0138588	07-15-2004	Saikley, et al.	
		2004/0147872	07-29-2004	Thompson	
		2004/0152622	08-05-2004	Keith, et al.	
		2004/0167801	08-26-2004	Say, et al.	
		2004/0171921	09-02-2004	Say, et al.	
		2004/0176672	09-09-2004	Silver, et al.	
		2004/0204687	10-14-2004	Mogensen, et al.	
		2004/0204868	10-14-2004	Maynard, et al.	
		2004/0223985	11-11-2004	Dunfiled, et al.	
		2004/0249253	12-09-2004	Racchini, et al.	
		2004/0254433	12-16-2004	Bandis, et al.	
		2004/0254434	12-16-2004	Goodnow, et al.	
		2004/0260478	12-23-2004	Schwamm	
		2004/0267300	12-30-2004	Mace	
		2005/0001024	01-06-2005	Kusaka, et al.	
		2005/0003470	01-06-2005	Nelson, et al.	
		2005/0004494	01-06-2005	Perez, et al.	
		2005/0027177	02-03-2005	Shin, et al.	
		2005/0031689	02-10-2005	Shults, et al.	
		2005/0038680	02-17-2005	McMahon	
		2005/0049179	03-03-2005	Davidson, et al.	
		2005/0070774	03-31-2005	Addison, et al.	
		2005/0090607	04-28-2005	Tapsak, et al.	
		2005/0096511	05-05-2005	Fox, et al.	
		2005/0096516	05-05-2005	Soykan, et al.	
		2005/0113886	05-26-2005	Fischell, et al.	
		2005/0114068	05-26-2005	Chey, et al.	
		2005/0116683	06-02-2005	Cheng, et al.	
		2005/0137530	06-23-2005	Campbell, et al.	
		2005/0173245	08-11-2005	Feldman, et al.	
		2005/0176136	08-11-2005	Burd, et al.	
		2005/0182306	08-18-2005	Sloan	
		2005/0184153	08-25-2005	Auchinleck	
		2005/0187442	08-25-2005	Cho, et al.	
		2005/0195930	09-08-2005	Spital, et al.	
		2005/0204134	09-15-2005	Von Arx, et al.	
		2005/0214892	09-29-2005	Kovatchev, et al.	
		2005/0245799	11-03-2005	Brauker, et al.	

EXAMINER **DATE CONSIDERED**

Substitute Disclosure Statement Form (PTO-1449)
* EXAMINER: Initial if reference considered, whether or not citation is in conformance with MPEP 609. Draw line through citation if not in conformance and not considered. Include copy of this form with next communication to applicant.1 Applicant's unique citation designation number (optional) 2 Applicant is to place a check mark here if English language Translation is attached

ALL REFERENCES CONSIDERED EXCEPT WHERE LINED THROUGH. /J.L/

PTO/SB/08 (09-08)
Approved for use through 10/31/2016. OMB 0651-0031
U.S. Patent and Trademark Office; U.S. DEPARTMENT OF COMMERCE
Under the Paperwork Reduction Act of 1995, no persons are required to respond to a collection of information unless it contains a valid OMB control number.

Substitute for form 1449/PTO

INFORMATION DISCLOSURE STATEMENT BY APPLICANT

(Use as many sheets as necessary)

	Complete if Known
Application Number	To be assigned
Filing Date	March 4, 2016
First Named Inventor	Wesley Scott Harper
Art Unit	To be assigned
Examiner Name	To be assigned

Sheet	12	of	21	Attorney Docket No: A0130.0090.C1C1

US PATENT DOCUMENTS

Examiner Initials*	Cite No.	Document Number Number-Kind Code	Publication Date MM-DD-YYYY	Name of Patentee or Applicant of Cited Document	Pages, Columns, Lines, Where Relevant Passages or Relevant Figures Appear
		2005/0251033	11-10-2005	Scarantino, et al.	
		2005/0277912	12-15-2005	John	
		2006/0001538	01-05-2006	Kraft, et al.	
		2006/0001551	01-05-2006	Kraft, et al.	
		2006/0010098	01-12-2006	Goodnow, et al.	
		2006/0015020	01-19-2006	Neale, et al.	
		2006/0015024	01-19-2006	Brister, et al.	
		2006/0017923	01-26-2006	Ruchti, et al.	
		2006/0020300	01-26-2006	Nghiern, et al.	
		2006/0031094	02-09-2006	Cohen, et al.	
		2006/0079740	04-13-2006	Silver, et al.	
		2006/0091006	05-04-2006	Wang, et al.	
		2006/0142651	06-29-2006	Brister, et al.	
		2006/0154642	07-13-2006	Scannell	
		2006/0166629	07-27-2006	Reggiardo	
		2006/0173406	08-03-2006	Haves, et al.	
		2006/0189863	08-24-2006	Peyser, et al.	
		2006/0193375	08-31-2006	Lee, et al.	
		2006/0222566	10-05-2006	Brauker, et al.	
		2006/0224141	10-05-2006	Rush, et al.	
		2006/0226985	10-12-2006	Goodnow, et al.	
		2006/0247508	11-02-2006	Fennell	
		2006/0247985	11-02-2006	Liamos, et al.	
		2006/0258929	11-16-2006	Goode, et al.	
		2006/0272652	12-07-2006	Stocker, et al.	
		2006/0290496	12-28-2006	Peeters, et al.	
		2006/0293607	12-28-2006	Alt, et al.	
		2007/0010950	01-11-2007	Abensour, et al.	
		2007/0016381	01-18-2007	Karnath, et al.	
		2007/0017983	01-25-2007	Frank, et al.	
		2007/0027381	02-01-2007	Stafford	
		2007/0033074	02-08-2007	Nitzan, et al.	
		2007/0060869	03-15-2007	Tolle, et al.	
		2007/0060979	03-15-2007	Strother, et al.	
		2007/0066956	03-22-2007	Finkel	
		2007/0073129	03-29-2007	Shah, et al.	
		2007/0078320	04-05-2007	Stafford	
		2007/0078321	04-05-2007	Mazza, et al.	
		2007/0078322	04-05-2007	Stafford	

EXAMINER **DATE CONSIDERED**

Substitute Disclosure Statement Form (PTO-1449)
* EXAMINER: Initial if reference considered, whether or not citation is in conformance with MPEP 609. Draw line through citation if not in conformance and not considered. Include copy of this form with next communication to applicant.1 Applicant's unique citation designation number (optional) 2 Applicant is to place a check mark here if English language Translation is attached

ALL REFERENCES CONSIDERED EXCEPT WHERE LINED THROUGH. /J.L/

PTO/SB/08 (09-08)
Approved for use through 10/31/2016. OMB 0651-0031
U.S. Patent and Trademark Office; U.S. DEPARTMENT OF COMMERCE
Under the Paperwork Reduction Act of 1995, no persons are required to respond to a collection of information unless it contains a valid OMB control number.

Substitute for form 1449/PTO

INFORMATION DISCLOSURE STATEMENT BY APPLICANT

(Use as many sheets as necessary)

	Complete if Known
Application Number	To be assigned
Filing Date	March 4, 2016
First Named Inventor	Wesley Scott Harper
Art Unit	To be assigned
Examiner Name	To be assigned

Sheet	13	of	21	Attorney Docket No: A0130.0090.C1C1

US PATENT DOCUMENTS

Examiner Initials*	Cite No.	Document Number Number-Kind Code	Publication Date MM-DD-YYYY	Name of Patentee or Applicant of Cited Document	Pages, Columns, Lines, Where Relevant Passages or Relevant Figures Appear
		2007/0078818	04-05-2007	Zvitz, et al.	
		2007/0093786	04-26-2007	Goldsmith, et al.	
		2007/0149875	06-28-2007	Ouyang, et al.	
		2007/0173706	07-26-2007	Neinast, et al.	
		2007/0173709	07-26-2007	Petisce, et al.	
		2007/0173710	07-26-2007	Petisce, et al.	
		2007/0191702	08-16-2007	Yodfat, et al.	
		2007/0203407	08-30-2007	Hoss, et al.	
		2007/0203539	08-30-2007	Stone, et al.	
		2007/0203966	08-30-2007	Brauker, et al.	
		2007/0208246	09-06-2007	Brauker, et al.	
		2007/0228071	10-04-2007	Kamen, et al.	
		2007/0231846	10-04-2007	Cosentino, et al.	
		2007/0232878	10-04-2007	Kovatchev, et al.	
		2007/0235331	10-11-2007	Simpson, et al.	
		2007/0249922	10-25-2007	Peyser, et al.	
		2007/0255321	11-01-2007	Gerber, et al.	
		2007/0255348	11-01-2007	Holtzclaw	
		2008/0004904	01-03-2008	Tran	
		2008/0009692	01-10-2008	Stafford	
		2008/0033254	02-07-2008	Karnath, et al.	
		2008/0039702	02-14-2008	Hayter, et al.	
		2008/0045824	02-21-2008	Tapsak, et al.	
		2008/0060955	03-13-2008	Goodnow	
		2008/0061961	03-13-2008	John	
		2008/0083617	04-10-2008	Simpson, et al.	
		2008/0092638	04-24-2008	Brenneman, et al.	
		2008/0114228	05-15-2008	McCluskey, et al.	
		2008/0125636	05-29-2008	Ward, et al.	
		2008/0127052	05-29-2008	Rostoker	
		2008/0177149	07-24-2008	Weinert, et al.	
		2008/0194934	08-14-2008	Ray, et al.	
		2008/0194938	08-14-2008	Brister, et al.	
		2008/0197024	08-21-2008	Simpson, et al.	
		2008/0200788	08-21-2008	Brister, et al.	
		2008/0200789	08-21-2008	Brister, et al.	
		2008/0200791	08-21-2008	Simpson, et al.	
		2008/0201325	08-21-2008	Doniger, et al.	
		2008/0208025	08-28-2008	Shults, et al.	

EXAMINER **DATE CONSIDERED**

Substitute Disclosure Statement Form (PTO-1449)
* EXAMINER: Initial if reference considered, whether or not citation is in conformance with MPEP 609. Draw line through citation if not in conformance and not considered. Include copy of this form with next communication to applicant.1 Applicant's unique citation designation number (optional) 2 Applicant is to place a check mark here if English language Translation is attached

ALL REFERENCES CONSIDERED EXCEPT WHERE LINED THROUGH. /J.L/

PTO/SB/08 (09-08)
Approved for use through 10/31/2016. OMB 0651-0031
U.S. Patent and Trademark Office; U.S. DEPARTMENT OF COMMERCE
Under the Paperwork Reduction Act of 1995, no persons are required to respond to a collection of information unless it contains a valid OMB control number.

Substitute for form 1449/PTO

INFORMATION DISCLOSURE STATEMENT BY APPLICANT

(Use as many sheets as necessary)

	Complete if Known
Application Number	To be assigned
Filing Date	March 4, 2016
First Named Inventor	Wesley Scott Harper
Art Unit	To be assigned
Examiner Name	To be assigned

Sheet	14	of	21	Attorney Docket No: A0130.0090.C1C1

US PATENT DOCUMENTS

Examiner Initials*	Cite No.	Document Number Number-Kind Code	Publication Date MM-DD-YYYY	Name of Patentee or Applicant of Cited Document	Pages, Columns, Lines, Where Relevant Passages or Relevant Figures Appear
		2008/0214918	09-04-2008	Brister, et al.	
		2008/0228051	09-18-2008	Shults, et al.	
		2008/0228054	09-18-2008	Shults, et al.	
		2008/0228055	09-18-2008	Sher	
		2008/0234943	09-25-2008	Ray, et al.	
		2008/0242961	10-02-2008	Brister, et al.	
		2008/0242963	10-02-2008	Essenpreis, et al.	
		2008/0254544	10-16-2008	Modzelewski, et al.	
		2008/0262469	10-23-2008	Brister, et al.	
		2008/0269714	10-30-2008	Mastrototaro, et al.	
		2008/0269723	10-30-2008	Mastrototaro, et al.	
		2008/0287764	11-20-2008	Rasdal, et al.	
		2008/0296155	12-04-2008	Shults, et al.	
		2008/0300572	12-04-2008	Rankers, et al.	
		2008/0306434	12-11-2008	Dobbles, et al.	
		2008/0306435	12-11-2008	Karnath, et al.	
		2008/0306444	12-11-2008	Brister, et al.	
		2008/0312859	12-18-2008	Skyggebjerg, et al.	
		2008/0319085	12-25-2008	Wright, et al.	
		2009/0006061	01-01-2009	Thukral, et al.	
		2009/0012377	01-08-2009	Jennewine, et al.	
		2009/0018424	01-15-2009	Karnath, et al.	
		2009/0030294	01-29-2009	Petisce, et al.	
		2009/0036758	02-05-2009	Brauker, et al.	
		2009/0036763	02-05-2009	Brauker, et al.	
		2009/0040022	02-12-2009	Finkenzeller	
		2009/0043181	02-12-2009	Brauker, et al.	
		2009/0048503	02-19-2009	Dalal, et al.	
		2009/0054747	02-26-2009	Fennell	
		2009/0062633	03-05-2009	Brauker, et al.	
		2009/0076356	03-19-2009	Simpson, et al.	
		2009/0076360	03-19-2009	Brister, et al.	
		2009/0082693	03-26-2009	Stafford	
		2009/0085873	04-02-2009	Betts, et al.	
		2009/0088787	04-02-2009	Koike, et al.	
		2009/0093687	04-09-2009	Telfort, et al.	
		2009/0099436	04-16-2009	Brister, et al.	
		2009/0124879	05-14-2009	Brister, et al.	
		2009/0124964	05-14-2009	Leach, et al.	

EXAMINER **DATE CONSIDERED**

Substitute Disclosure Statement Form (PTO-1449)
* EXAMINER: Initial if reference considered, whether or not citation is in conformance with MPEP 609. Draw line through citation if not in conformance and not considered. Include copy of this form with next communication to applicant.1 Applicant's unique citation designation number (optional) 2 Applicant is to place a check mark here if English language Translation is attached

ALL REFERENCES CONSIDERED EXCEPT WHERE LINED THROUGH. /J.L/

PTO/SB/08 (09-08)
Approved for use through 10/31/2016. OMB 0651-0031
U.S. Patent and Trademark Office; U.S. DEPARTMENT OF COMMERCE
Under the Paperwork Reduction Act of 1995, no persons are required to respond to a collection of information unless it contains a valid OMB control number.

Substitute for form 1449/PTO

INFORMATION DISCLOSURE STATEMENT BY APPLICANT

(Use as many sheets as necessary)

Sheet	15	of	21

Complete if Known	
Application Number	To be assigned
Filing Date	March 4, 2016
First Named Inventor	Wesley Scott Harper
Art Unit	To be assigned
Examiner Name	To be assigned
Attorney Docket No: A0130.0090.C1C1	

US PATENT DOCUMENTS

Examiner Initials*	Cite No.	Document Number Number-Kind Code	Publication Date MM-DD-YYYY	Name of Patentee or Applicant of Cited Document	Pages, Columns, Lines, Where Relevant Passages or Relevant Figures Appear
		2009/0131768	05-21-2009	Simpson, et al.	
		2009/0131769	05-21-2009	Leach, et al.	
		2009/0131776	05-21-2009	Simpson, et al.	
		2009/0131777	05-21-2009	Simpson, et al.	
		2009/0131860	05-21-2009	Nielsen	
		2009/0137886	05-28-2009	Shariati, et al.	
		2009/0137887	05-28-2009	Shariati, et al.	
		2009/0143659	06-04-2009	Li, et al.	
		2009/0156924	06-18-2009	Shariati, et al.	
		2009/0163791	06-25-2009	Brister, et al.	
		2009/0178459	07-16-2009	Li, et al.	
		2009/0182217	07-16-2009	Li, et al.	
		2009/0192366	07-30-2009	Mensinger, et al.	
		2009/0192380	07-30-2009	Shariati, et al.	
		2009/0192722	07-30-2009	Shariati, et al.	
		2009/0192724	07-30-2009	Brauker, et al.	
		2009/0192745	07-30-2009	Karnath, et al.	
		2009/0192751	07-30-2009	Karnath, et al.	
		2009/0216100	08-27-2009	Ebner, et al.	
		2009/0216103	08-27-2009	Brister, et al.	
		2009/0240120	09-24-2009	Mensinger, et al.	
		2009/0240128	09-24-2009	Mensinger, et al.	
		2009/0240193	09-24-2009	Mensinger, et al.	
		2009/0242399	10-01-2009	Karnath, et al.	
		2009/0242425	10-01-2009	Karnath, et al.	
		2009/0247855	10-01-2009	Boock, et al.	
		2009/0247856	10-01-2009	Boock, et al.	
		2009/0298182	12-03-2009	Schulat, et al.	
		2009/0299155	12-03-2009	Yang, et al.	
		2009/0299156	12-03-2009	Simpson, et al.	
		2009/0299162	12-03-2009	Brauker, et al.	
		2009/0299276	12-03-2009	Brauker, et al.	
		2010/0076283	03-25-2010	Simpson, et al.	
		2010/0093786	04-15-2010	Watanabe, et al.	
		2010/0096259	04-22-2010	Zhang, et al.	
		2010/0105999	04-29-2010	Dixon, et al.	
		2010/0113897	05-06-2010	Brenneman, et al.	
		2010/0141656	06-10-2010	Krieftewirth	
		2010/0146300	06-10-2010	Brown	

EXAMINER **DATE CONSIDERED**

Substitute Disclosure Statement Form (PTO-1449)
* EXAMINER: Initial if reference considered, whether or not citation is in conformance with MPEP 609. Draw line through citation if not in conformance and not considered. Include copy of this form with next communication to applicant.1 Applicant's unique citation designation number (optional) 2 Applicant is to place a check mark here if English language Translation is attached

ALL REFERENCES CONSIDERED EXCEPT WHERE LINED THROUGH. /J.L/

PTO/SB/08 (09-08)
Approved for use through 10/31/2016. OMB 0651-0031
U.S. Patent and Trademark Office; U.S. DEPARTMENT OF COMMERCE
Under the Paperwork Reduction Act of 1995, no persons are required to respond to a collection of information unless it contains a valid OMB control number.

Substitute for form 1449/PTO

INFORMATION DISCLOSURE STATEMENT BY APPLICANT

(Use as many sheets as necessary)

	Complete if Known
Application Number	To be assigned
Filing Date	March 4, 2016
First Named Inventor	Wesley Scott Harper
Art Unit	To be assigned
Examiner Name	To be assigned

Sheet	16	of	21	Attorney Docket No: A0130.0090.C1C1

US PATENT DOCUMENTS

Examiner Initials*	Cite No.	Document Number Number-Kind Code	Publication Date MM-DD-YYYY	Name of Patentee or Applicant of Cited Document	Pages, Columns, Lines, Where Relevant Passages or Relevant Figures Appear
		2010/0152554	06-17-2010	Steine, et al.	
		2010/0160759	06-24-2010	Celentano, et al.	
		2010/0168538	07-01-2010	Keenan, et al.	
		2010/0168540	07-01-2010	Karnath, et al.	
		2010/0168541	07-01-2010	Karnath, et al.	
		2010/0168542	07-01-2010	Karnath, et al.	
		2010/0168543	07-01-2010	Karnath, et al.	
		2010/0168544	07-01-2010	Karnath, et al.	
		2010/0168545	07-01-2010	Karnath, et al.	
		2010/0168546	07-01-2010	Karnath, et al.	
		2010/0168657	07-01-2010	Karnath, et al.	
		2010/0174168	07-08-2010	Goode, Jr., et al.	
		2010/0174266	07-08-2010	Estes	
		2010/0179399	07-15-2010	Goode, Jr., et al.	
		2010/0179402	07-15-2010	Goode, Jr., et al.	
		2010/0179405	07-15-2010	Goode, Jr., et al.	
		2010/0179408	07-15-2010	Karnath, et al.	
		2010/0179409	07-15-2010	Karnath, et al.	
		2010/0185065	07-22-2010	Goode, Jr., et al.	
		2010/0185071	07-22-2010	Simpson, et al.	
		2010/0185072	07-22-2010	Goode, Jr., et al.	
		2010/0185073	07-22-2010	Goode, Jr., et al.	
		2010/0185074	07-22-2010	Goode, Jr., et al.	
		2010/0185075	07-22-2010	Brister, et al.	
		2010/0185175	07-22-2010	Kamen, et al.	
		2010/0198035	08-05-2010	Karnath, et al.	
		2010/0198142	08-05-2010	Sloan, et al.	
		2010/0213080	08-26-2010	Celentano, et al.	
		2010/0217105	08-26-2010	Yodfat, et al.	
		2010/0262201	10-14-2010	He, et al.	
		2010/0313105	12-09-2010	Nekoomaram, et al.	
		2010/0331642	12-30-2010	Bruce, et al.	
		2011/0024043	02-03-2011	Boock, et al.	
		2011/0024307	02-03-2011	Simpson, et al.	
		2011/0027127	02-03-2011	Simpson, et al.	
		2011/0027453	02-03-2011	Boock, et al.	
		2011/0027458	02-03-2011	Boock, et al.	
		2011/0028815	02-03-2011	Simpson, et al.	
		2011/0028816	02-03-2011	Simpson, et al.	

EXAMINER **DATE CONSIDERED**

Substitute Disclosure Statement Form (PTO-1449)
* EXAMINER: Initial if reference considered, whether or not citation is in conformance with MPEP 609. Draw line through citation if not in conformance and not considered. Include copy of this form with next communication to applicant.1 Applicant's unique citation designation number (optional) 2 Applicant is to place a check mark here if English language Translation is attached

ALL REFERENCES CONSIDERED EXCEPT WHERE LINED THROUGH. /J.L/

PTO/SB/08 (09-08)
Approved for use through 10/31/2016. OMB 0651-0031
U.S. Patent and Trademark Office; U.S. DEPARTMENT OF COMMERCE
Under the Paperwork Reduction Act of 1995, no persons are required to respond to a collection of information unless it contains a valid OMB control number.

Substitute for form 1449/PTO

INFORMATION DISCLOSURE STATEMENT BY APPLICANT

(Use as many sheets as necessary)

	Complete if Known
Application Number	To be assigned
Filing Date	March 4, 2016
First Named Inventor	Wesley Scott Harper
Art Unit	To be assigned
Examiner Name	To be assigned

Sheet	17	of	21	Attorney Docket No: A0130.0090.C1C1

US PATENT DOCUMENTS

Examiner Initials*	Cite No.	Document Number Number-Kind Code	Publication Date MM-DD-YYYY	Name of Patentee or Applicant of Cited Document	Pages, Columns, Lines, Where Relevant Passages or Relevant Figures Appear
		2011/0031986	02-10-2011	Bhat, et al.	
		2011/0077490	03-31-2011	Simpson, et al.	
		2011/0148905	06-23-2011	Simmons, et al.	
		2011/0178461	07-21-2011	Chong, et al.	
		2011/0208027	08-25-2011	Wagner, et al.	
		2011/0257895	10-20-2011	Brauker, et al.	
		2011/0287528	11-24-2011	Fern, et al.	
		2011/0320130	12-29-2011	Valdes, et al.	
		2012/0078071	03-29-2012	Bohm, et al.	
		2012/0108934	05-03-2012	Valdes, et al.	
		2012/0165626	06-28-2012	Irina, et al.	
		2012/0165640	06-28-2012	Galley, et al.	
		2013/0035575	02-07-2013	Mayou, et al.	
		2013/0235166	09-12-2013	Jones, et al.	

FOREIGN PATENT DOCUMENTS

Examiner Initials*	Cite No.	Foreign Patent Document Country Code-Number-Kind Code	Publication Date MM-DD-YYYY	Name of Patentee or Applicant of cited Document	Pages, Columns, Lines, Where Relevant Passages or RelevantFigures Appear	T[6]
		EP-0098592	01-18-1984	Fujisawa Pharmaceutical Co., Ltd.		
		EP-0127958	12-12-1984	Genetics International., Inc.		
		EP-0320109	06-14-1989	Medisense, Inc.		
		EP-0390390	10-03-1990	Associated Universities, Inc. et al.		
		EP-0396788	11-14-1990	PPG Heillige B.V.		
		WO-00/59370	10-12-2000	Cambridge University, Technical Services Limited		
		WO-01/52935	07-26-2001	Medical Research Group, Inc.		
		WO-01/54753	08-02-2001	Medical Research Group, Inc.		
		WO-03/82091	10-09-2003	Inverness Medical Limited		
		WO-2008/001366	01-03-2008	Endo-Rhythm Ltd.		

EXAMINER **DATE CONSIDERED**

Substitute Disclosure Statement Form (PTO-1449)
* EXAMINER: Initial if reference considered, whether or not citation is in conformance with MPEP 609. Draw line through citation if not in conformance and not considered. Include copy of this form with next communication to applicant.1 Applicant's unique citation designation number (optional) 2 Applicant is to place a check mark here if English language Translation is attached

ALL REFERENCES CONSIDERED EXCEPT WHERE LINED THROUGH. /J.L/

PTO/SB/08 (09-08)
Approved for use through 10/31/2016. OMB 0651-0031
U.S. Patent and Trademark Office; U.S. DEPARTMENT OF COMMERCE
Under the Paperwork Reduction Act of 1995, no persons are required to respond to a collection of information unless it contains a valid OMB control number.

Substitute for form 1449/PTO

INFORMATION DISCLOSURE STATEMENT BY APPLICANT

(Use as many sheets as necessary)

	Complete if Known
Application Number	To be assigned
Filing Date	March 4, 2016
First Named Inventor	Wesley Scott Harper
Art Unit	To be assigned
Examiner Name	To be assigned

Sheet	18	of	21	Attorney Docket No: A0130.0090.C1C1

NON PATENT LITERATURE DOCUMENTS			
Examiner Initials*	Cite No.	Include name of the author (in CAPITAL LETTERS), title of the article (when appropriate), title of the item (book, magazine, journal, serial, symposium, catalog, etc.), date, page(s), volume-issue number(s), publisher, city and/or country where published.	T[2]
		ARMOUR, J. C., et al., "Application of Chronic Intravascular Blood Glucose Sensor in Dogs", Diabetes, Vol. 39, 1990, pp. 1519-1526.	
		BENNION, N., et al., "Alternate Site Glucose Testing: A Crossover Design", Diabetes Technology & Therapeutics. Vol. 4, No. 1, 2002, pp. 25-33.	
		BLANK, T. B., et al., "CLINICAL RESULTS FROM A NON-INVASIVE BLOOD GLUCOSE MONITOR", Optical Diagnostics and Sensing of Biological Fluids and Glucose and Cholesterol Monitoring II, Proceedings of SPIE, Vol. 4624, 2002, pp. 1-10.	
		BROOKS, S. L., et al., "Development of an On-line Glucose Sensor for Fermentation Monitoring", Biosensors, Vol. 3, 1987, pp. 45-56.	
		CASS, A. E.G., et al., "Ferrocene-Medicated Enzyme Electrode for Amperometric Determination of Glucose", Analytical Chemistry, Vol. 56, No. 4, 1984, pp. 667-671.	
		CHEYNE, E.H., et al., "Performance of a Continuous Glucose Monitoring System During Controlled Hypoglycaemia in Healthy Volunteers", Diabetes Technology & Therapeutics, Vol. 4, No. 5, 2002, pp. 607-613.	
		CSOREGI, E., et al., "Design and Optimization of a Selective Subcutaneously Implantable Glucose Electrode Based on "Wired" Glucose Oxidase", Analytical Chemistry, Vol. 67, No. 7, 1995, pp. 1240-1244.	
		FELDMAN, B., et al., "A Continuous Glucose Sensor Based on Wired Enzyme™ Technology - Results from a 3-Day Trial in Patients with Type 1 Diabetes", Diabetes Technology & Therapeutics, Vol. 5 No. 5, 2003, pp. 769-779.	
		FELDMAN, B., et al., "Correlation of Glucose Concentrations in Interstitial Fluid and Venous Blood During Periods of Rapid Glucose Change", Abbott Diabetes Care, Inc. Freestyle Navigator Continuous Glucose Monitor Pamphlet, 2004.	
		ISERMANN, R., "SUPERVISION, FAULT-DETECTION AND FAULT-DIAGNOSIS METHODS - AN INTRODUCTION", Control Engineering Practice, Vol. 5, No. 5, 1997, pp. 639-652.	
		ISERMANN, R., et al., "TRENDS IN THE APPLICATION OF MODEL-BASED FAULT DETECTION AND DIAGNOSIS OF TECHNICAL PROCESSES", Control Engineering Practice, Vol. 5, No. 5, 1997, pp. 709-719.	
		JOHNSON, P. C., "Peripheral Circulation", John Wiley & Sons, 1978, p. 198.	
		JOVANOVIC, L., "The Role of Continuous Glucose Monitoring in Gestational Diabetes Mellitus", Diabetes Technology & Therapeutics, Vol. 2, Suppl. 1, 2000, pp. S67-S71.	
		JUNGHEIM, K., et al., "HOW RAPID DOES GLUCOSE CONCENTRATION CHANGE IN DAILY LIFE OF PATIENTS WITH TYPE 1 DIABETES?", Diabetologia, Vol. 45, 2002, pp. 250.	
		JUNGHEIM, K., et al., "Risky Delay of Hypoglycemia Detection by Glucose Monitoring at the Arm", Diabetes Care, Vol. 24, No. 7, 2001, pp. 1303-1304.	

EXAMINER **DATE CONSIDERED**

Substitute Disclosure Statement Form (PTO-1449)
* EXAMINER: Initial if reference considered, whether or not citation is in conformance with MPEP 609. Draw line through citation if not in conformance and not considered. Include copy of this form with next communication to applicant. 1 Applicant's unique citation designation number (optional) 2 Applicant is to place a check mark here if English language Translation is attached

ALL REFERENCES CONSIDERED EXCEPT WHERE LINED THROUGH. /J.L/

PTO/SB/08 (09-08)
Approved for use through 10/31/2016. OMB 0651-0031
U.S. Patent and Trademark Office; U.S. DEPARTMENT OF COMMERCE
Under the Paperwork Reduction Act of 1995, no persons are required to respond to a collection of information unless it contains a valid OMB control number.

Substitute for form 1449/PTO **INFORMATION DISCLOSURE STATEMENT BY APPLICANT** *(Use as many sheets as necessary)*				*Complete if Known*	
				Application Number	To be assigned
				Filing Date	March 4, 2016
				First Named Inventor	Wesley Scott Harper
				Art Unit	To be assigned
				Examiner Name	To be assigned
Sheet	19	of	21	Attorney Docket No: A0130.0090.C1C1	

NON PATENT LITERATURE DOCUMENTS			
Examiner Initials*	Cite No.	Include name of the author (in CAPITAL LETTERS), title of the article (when appropriate), title of the item (book, magazine, journal, serial, symposium, catalog, etc.), date, page(s), volume-issue number(s), publisher, city and/or country where published.	T[2]
		KAPLAN, S. M., "WILEY ELECTRICAL AND ELECTRONICS ENGINEERING DICTIONARY", IEEE Press, 2004, pp. 141, 142, 548, 549.	
		LODWIG, V., et al., "Continuous Glucose Monitoring with Glucose Sensors: Calibration and Assessment Criteria", Diabetes Technology & Therapeutics, Vol. 5, No. 4, 2003, pp. 573-587.	
		LORTZ, J., et al., "What is Bluetooth? We Explain The Newest Short-Range Connectivity Technology", Smart Computing Learning Series, Wireless Computing, Vol. 8, Issue 5, 2002, pp. 72-74.	
		MALIN, S. F., et al., "Noninvasive Prediction of Glucose by Near-Infrared Diffuse Reflectance Spectroscopy", Clinical Chemistry, Vol. 45, No. 9, 1999, pp. 1651-1658.	
		MCGARRAUGH, G., et al., "Glucose Measurements Using Blood Extracted from the Forearm and the Finger", TheraSense, Inc., 2001, 16 Pages.	
		MCGARRAUGH, G., et al., "Physiological Influences on Off-Finger Glucose Testing", Diabetes Technology & Therapeutics, Vol. 3, No. 3, 2001, pp. 367-376.	
		MCKEAN, B. D., et al., "A Telemetry-Instrumentation System for Chronically Implanted Glucose and Oxygen Sensors", IEEE Transactions on Biomedical Engineering, Vol. 35, No. 7, 1988, pp. 526-532.	
		MORBIDUCCI, U., et al., "Improved usability of the minimal model of insulin sensitivity based on an automated approach and genetic algorithms for parameter estimation", Clinical Science, Vol. 112, 2007, pp. 257-263.	
		MOUGIAKAKOU, S. G., et al., "A Real Time Simulation Model of Glucose-Insulin Metabolism for Type 1 Diabetes Patients", Proceedings of the 2005 IEEE Engineering in Medicine and Biology 27th Annual Conference, 2005, pp. 298-301.	
		PARKER, R., et al., "Robust H_∞ Glucose Control in Diabetes Using a Physiological Model", AIChE Journal, Vol. 46, No. 12, 2000, pp. 2537-2549.	
		PICKUP, J. C., et al., "Implantable Glucose Sensors: Choosing the Appropriate Sensing Strategy", Biosensors, Vol. 3, 1987/88, pp. 335-346.	
		PICKUP, J. C., et al., "In vivo molecular sensing in diabetes mellitus: an implantable glucose sensor with direct electron transfer", Diabetologia, Vol. 32, 1989, pp. 213-217.	
		PISHKO, M. V., et al., "Amperometric Glucose Microelectrodes Prepared through Immobilization of Glucose Oxidase in Redox Hydrogels", Analytical Chemistry, Vol. 63, No. 20, 1991, pp. 2268-2272.	
		QUINN, C. P., et al., "Kinetics of glucose delivery to subcutaneous tissue in rats measured with 0.3-mm amperometric microsensors", American Journal of Physiology, Vol. 269, No. 1, 1995, E155- E161.	
		ROE, J. N., et al., "Bloodless Glucose Measurements", Critical Reviews™ in Therapeutic Drug Carrier Systems, Vol. 15, Issue 3, 1998, pp. 199-241.	

EXAMINER **DATE CONSIDERED**

Substitute Disclosure Statement Form (PTO-1449)
* EXAMINER: Initial if reference considered, whether or not citation is in conformance with MPEP 609. Draw line through citation if not in conformance and not considered. Include copy of this form with next communication to applicant. 1 Applicant's unique citation designation number (optional) 2 Applicant is to place a check mark here if English language Translation is attached

ALL REFERENCES CONSIDERED EXCEPT WHERE LINED THROUGH. /J.L/

PTO/SB/08 (09-08)
Approved for use through 10/31/2016. OMB 0651-0031
U.S. Patent and Trademark Office; U.S. DEPARTMENT OF COMMERCE
Under the Paperwork Reduction Act of 1995, no persons are required to respond to a collection of information unless it contains a valid OMB control number.

Substitute for form 1449/PTO **INFORMATION DISCLOSURE STATEMENT BY APPLICANT** *(Use as many sheets as necessary)*				*Complete if Known*	
				Application Number	To be assigned
				Filing Date	March 4, 2016
				First Named Inventor	Wesley Scott Harper
				Art Unit	To be assigned
				Examiner Name	To be assigned
Sheet	20	of	21	Attorney Docket No: A0130.0090.C1C1	

NON PATENT LITERATURE DOCUMENTS			
Examiner Initials*	Cite No.	Include name of the author (in CAPITAL LETTERS), title of the article (when appropriate), title of the item (book, magazine, journal, serial, symposium, catalog, etc.), date, page(s), volume-issue number(s), publisher, city and/or country where published.	T[2]
		SAKAKIDA, M., et al., "Development of ferrocene-mediated needle-type glucose sensor as a measure of true subcutaneous tissue glucose concentrations", Artificial Organs Today, Vol. 2, No. 2, 1992, pp. 145-158.	
		SAKAKIDA, M., et al., "Ferrocene-mediated needle-type glucose sensor covered with newly designed biocompatible membrane", Sensors and Actuators B, Vol. 13-14, 1993, pp. 319-322.	
		SALEHI, C., et al., "A TELEMETRY-INSTRUMENTATION SYSTEM FOR LONG-TERM IMPLANTABLE GLUCOSE AND OXYGEN SENSORS", Analytical Letters, Vol. 29, No. 13, 1996, pp. 2289-2308.	
		SCHMIDTKE, D. W., et al., "Measurement and modeling of the transient difference between blood and subcutaneous glucose concentrations in the rat after injection of insulin", Proceedings of the National Academy of Sciences, Vol. 95, 1998, pp. 294-299.	
		SHAW, G. W., et al., "*In Vitro* testing of a simply constructed, highly stable glucose sensor suitable for implantation in diabetic patients", Biosensors & Bioelectronics, Vol. 6, 1991, pp. 401-406.	
		SHICHIRI, M., et al., "Glycaemic Control in Pancreatectomized Dogs with a Wearable Artificial Endocrine Pancreas", Diabetologia, Vol. 24, 1983, pp. 179-184.	
		SHICHIRI, M., et al., "In Vivo Characteristics of Needle-Type Glucose Sensor - Measurements of Subcutaneous Glucose Concentrations in Human Volunteers", Hormone and Metabolic Research Supplement Series, Vol. 20, 1988, pp. 17-20.	
		SHICHIRI, M., et al., "Membrane design for extending the long-life of an implantable glucose sensor", Diabetes Nutrition and Metabolism, Vol. 2, 1989, pp. 309-313.	
		SHICHIRI, M., et al., "Needle-type Glucose Sensor for Wearable Artificial Endocrine Pancreas", Implantable Sensors for Closed-Loop Prosthetic Systems, Chapter 15, 1985, pp. 197-210.	
		SHICHIRI, M., et al., "Telemetry Glucose Monitoring Device With Needle-Type Glucose Sensor: A Useful Tool for Blood Glucose Monitoring in Diabetic Individuals", Diabetes Care, Vol. 9, No. 3, 1986, pp. 298-301.	
		SHICHIRI, M., et al., "WEARABLE ARTIFICIAL ENDOCRINE PANCREAS WITH NEEDLE-TYPE GLUCOSE SENSOR", The Lancet, 1982, pp. 1129-1131.	
		SHULTS, M. C., et al., "A Telemetry-Instrumentation System for Monitoring Multiple Subcutaneously Implanted Glucose Sensors", IEEE Transactions on Biomedical Engineering, Vol. 41, No. 10, 1994, pp. 937-942.	
		STERNBERG, R., et al., "Study and Development of Multilayer Needle-type Enzyme-based Glucose Microsensors", Biosensors, Vol. 4, 1988, pp. 27-40.	
		THOMPSON, M., et al., "*In Vivo* Probes: Problems and Perspectives", Clinical Biochemistry, Vol. 19, 1986, pp. 255-261.	

EXAMINER **DATE CONSIDERED**

Substitute Disclosure Statement Form (PTO-1449)
* EXAMINER: Initial if reference considered, whether or not citation is in conformance with MPEP 609. Draw line through citation if not in conformance and not considered. Include copy of this form with next communication to applicant. 1 Applicant's unique citation designation number (optional) 2 Applicant is to place a check mark here if English language Translation is attached

ALL REFERENCES CONSIDERED EXCEPT WHERE LINED THROUGH. /J.L/

PTO/SB/08 (09-08)
Approved for use through 10/31/2016. OMB 0651-0031
U.S. Patent and Trademark Office; U.S. DEPARTMENT OF COMMERCE
Under the Paperwork Reduction Act of 1995, no persons are required to respond to a collection of information unless it contains a valid OMB control number.

Substitute for form 1449/PTO

INFORMATION DISCLOSURE STATEMENT BY APPLICANT

(Use as many sheets as necessary)

	Complete if Known
Application Number	To be assigned
Filing Date	March 4, 2016
First Named Inventor	Wesley Scott Harper
Art Unit	To be assigned
Examiner Name	To be assigned

Sheet	21	of	21	Attorney Docket No: A0130.0090.C1C1

NON PATENT LITERATURE DOCUMENTS			
Examiner Initials*	Cite No.	Include name of the author (in CAPITAL LETTERS), title of the article (when appropriate), title of the item (book, magazine, journal, serial, symposium, catalog, etc.), date, page(s), volume-issue number(s), publisher, city and/or country where published.	T[2]
		TURNER, A.P.F., et al., "Diabetes Mellitus: Biosensors for Research and Management", Biosensors, Vol. 1, 1985, pp. 85-115.	
		UPDIKE, S. J., et al., "Principles of Long-term Fully Implanted Sensors with Emphasis on Radiotelemetric Monitoring of Blood Glucose from inside a Subcutaneous Foreign Body Capsule (FBC)", Biosensors in the Body: Continuous In vivo Monitoring, Chapter 4, 1997, pp. 117-137.	
		VELHO, G., et al., "Strategies for calibrating a subcutaneous glucose sensor", Biomedica Biochimica Acta, Vol. 48, 1989, pp. 957-964.	
		WILSON, G. S., et al., "Progress toward the Development of an Implantable Sensor for Glucose", Clinical Chemistry, Vol. 38, No. 9, 1992, pp. 1613-1617.	

ALL REFERENCES CONSIDERED EXCEPT WHERE LINED THROUGH. /J.L/

EXAMINER /JERRY LIN/ **DATE CONSIDERED** 05/14/2018

Substitute Disclosure Statement Form (PTO-1449)
* EXAMINER: Initial if reference considered, whether or not citation is in conformance with MPEP 609. Draw line through citation if not in conformance and not considered. Include copy of this form with next communication to applicant. 1 Applicant's unique citation designation number (optional) 2 Applicant is to place a check mark here if English language Translation is attached

POWER OF ATTORNEY TO PROSECUTE BEFORE THE USPTO
By Assignee

ABBOTT DIABETES CARE INC., assignee of the application(s) for United States Letters Patent identified in the attached statement under 37 CFR 3.73(c), does revoke all powers of attorney previously given and hereby appoints as its attorneys and/or agents, with full power of substitution and revocation, to prosecute this application and transact all business in the United States Patent and Trademark Office, and in countries other than the United States, and to do all things necessary or appropriate therefor before any competent International Authorities in connection with any international patent application(s) corresponding to the above-identified application, all of the registered practitioners identified by Customer Number **95508**.

ONE LLP
4000 MacArthur Blvd.,
East Tower, Suite 500
Newport Beach, CA 92660
(949)-502-2870

The undersigned, also hereby authorizes and empowers all of the registered practitioners associated with Customer Number 95508 to sign statements under 37 CFR 3.73(b) on behalf of the undersigned to establish the undersigned's right to take actions in applications for United States Letters Patent.

Please change the correspondence address for the application identified in the attached statement under 37 CFR 3.73(b) to the address associated with Customer Number 95508.

The individual whose signature is supplied below is authorized to act on behalf of the assignee.

Full Name of Assignee: ABBOTT DIABETES CARE INC.	
Post Office Address: 1420 Harbor Bay Parkway, Alameda, CA 94502	
Signature of Declarant or Assignee:	Date: 12-3-07
Full Name of Declarant: Susan Tall If Other Than Assignee:	
Title of Declarant: Senior Counsel, Patents & Trademarks	
Address of Declarant: 1420 Harbor Bay Parkway, Alameda, CA 94502	

Electronic Acknowledgement Receipt

EFS ID:	32650991
Application Number:	15061774
International Application Number:	
Confirmation Number:	5923
Title of Invention:	METHODS AND SYSTEMS FOR EARLY SIGNAL ATTENUATION DETECTION AND PROCESSING
First Named Inventor/Applicant Name:	Wesley Scott Harper
Customer Number:	95508
Filer:	Mark Andrew Stirrat/Alana Fredericks
Filer Authorized By:	Mark Andrew Stirrat
Attorney Docket Number:	A0130.0090.C1C1
Receipt Date:	17-MAY-2018
Filing Date:	04-MAR-2016
Time Stamp:	13:09:31
Application Type:	Utility under 35 USC 111(a)

Payment information:

Submitted with Payment	no

File Listing:

Document Number	Document Description	File Name	File Size(Bytes)/ Message Digest	Multi Part /.zip	Pages (if appl.)
1	Assignee showing of ownership per 37 CFR 3.73	A0130_0090_C1C1_373Form.pdf	100226 c340d79e0f6866093ceda9b7a2056b90cc495e0a	no	3

Warnings:

Information:					
2	Power of Attorney	Abbott_US_POA.pdf	195275 0f313a77b2b660f04e3b7ddc795affde7278b9e0	no	1
Warnings:					
Information:					
			Total Files Size (in bytes):	295501	

This Acknowledgement Receipt evidences receipt on the noted date by the USPTO of the indicated documents, characterized by the applicant, and including page counts, where applicable. It serves as evidence of receipt similar to a Post Card, as described in MPEP 503.

New Applications Under 35 U.S.C. 111
If a new application is being filed and the application includes the necessary components for a filing date (see 37 CFR 1.53(b)-(d) and MPEP 506), a Filing Receipt (37 CFR 1.54) will be issued in due course and the date shown on this Acknowledgement Receipt will establish the filing date of the application.
National Stage of an International Application under 35 U.S.C. 371
If a timely submission to enter the national stage of an international application is compliant with the conditions of 35 U.S.C. 371 and other applicable requirements a Form PCT/DO/EO/903 indicating acceptance of the application as a national stage submission under 35 U.S.C. 371 will be issued in addition to the Filing Receipt, in due course.
New International Application Filed with the USPTO as a Receiving Office
If a new international application is being filed and the international application includes the necessary components for an international filing date (see PCT Article 11 and MPEP 1810), a Notification of the International Application Number and of the International Filing Date (Form PCT/RO/105) will be issued in due course, subject to prescriptions concerning national security, and the date shown on this Acknowledgement Receipt will establish the international filing date of the application.

Under the Paperwork Reduction Act of 1995, no persons are required to respond to a collection of information unless it displays a valid OMB control number.

STATEMENT UNDER 37 CFR 3.73(c)

Applicant/Patent Owner: Wesley Scott Harper

Application No./Patent No.: 15/061,774 Filed/Issue Date: 03/04/2016

Titled: METHOD AND SYSTEM FOR EARLY SIGNAL ATTENUATION DETECTION AND PROCESSING

ABBOTT DIABETES CARE INC., a CORPORATION

(Name of Assignee) (Type of Assignee, e.g., corporation, partnership, university, government agency, etc.)

states that, for the patent application/patent identified above, it is (choose **one** of options 1, 2, 3 or 4 below):

1. ☑ The assignee of the entire right, title, and interest.

2. ☐ An assignee of less than the entire right, title, and interest (check applicable box):

☐ The extent (by percentage) of its ownership interest is _____%. Additional Statement(s) by the owners holding the balance of the interest must be submitted to account for 100% of the ownership interest.

☐ There are unspecified percentages of ownership. The other parties, including inventors, who together own the entire right, title and interest are:

Additional Statement(s) by the owner(s) holding the balance of the interest must be submitted to account for the entire right, title, and interest.

3. ☐ The assignee of an undivided interest in the entirety (a complete assignment from one of the joint inventors was made). The other parties, including inventors, who together own the entire right, title, and interest are:

Additional Statement(s) by the owner(s) holding the balance of the interest must be submitted to account for the entire right, title, and interest.

4. ☐ The recipient, via a court proceeding or the like (*e.g.*, bankruptcy, probate), of an undivided interest in the entirety (a complete transfer of ownership interest was made). The certified document(s) showing the transfer is attached.

The interest identified in option 1, 2 or 3 above (not option 4) is evidenced by either (choose **one** of options A or B below):

A. ☑ An assignment from the inventor(s) of the patent application/patent identified above. The assignment was recorded in the United States Patent and Trademark Office at Reel 040258, Frame 0149, or for which a copy thereof is attached.

B. ☐ A chain of title from the inventor(s), of the patent application/patent identified above, to the current assignee as follows:

1. From: _____ To: _____

The document was recorded in the United States Patent and Trademark Office at

Reel _____, Frame _____, or for which a copy thereof is attached.

2. From: _____ To: _____

The document was recorded in the United States Patent and Trademark Office at

Reel _____, Frame _____, or for which a copy thereof is attached.

This collection of information is required by 37 CFR 3.73(b). The information is required to obtain or retain a benefit by the public which is to file (and by the USPTO to process) an application. Confidentiality is governed by 35 U.S.C. 122 and 37 CFR 1.11 and 1.14. This collection is estimated to take 12 minutes to complete, including gathering, preparing, and submitting the completed application form to the USPTO. Time will vary depending upon the individual case. Any comments on the amount of time you require to complete this form and/or suggestions for reducing this burden, should be sent to the Chief Information Officer, U.S. Patent and Trademark Office, U.S. Department of Commerce, P.O. Box 1450, Alexandria, VA 22313-1450. DO NOT SEND FEES OR COMPLETED FORMS TO THIS ADDRESS. **SEND TO: Commissioner for Patents, P.O. Box 1450, Alexandria, VA 22313-1450.**

If you need assistance in completing the form, call 1-800-PTO-9199 and select option 2.

Under the Paperwork Reduction Act of 1995, no persons are required to respond to a collection of information unless it displays a valid OMB control number.

STATEMENT UNDER 37 CFR 3.73(c)

3. From: _____ To: _____

The document was recorded in the United States Patent and Trademark Office at

Reel _____, Frame _____, or for which a copy thereof is attached.

4. From: _____ To: _____

The document was recorded in the United States Patent and Trademark Office at

Reel _____, Frame _____, or for which a copy thereof is attached.

5. From: _____ To: _____

The document was recorded in the United States Patent and Trademark Office at

Reel _____, Frame _____, or for which a copy thereof is attached.

6. From: _____ To: _____

The document was recorded in the United States Patent and Trademark Office at

Reel _____, Frame _____, or for which a copy thereof is attached.

☐ Additional documents in the chain of title are listed on a supplemental sheet(s).

☑ As required by 37 CFR 3.73(c)(1)(i), the documentary evidence of the chain of title from the original owner to the assignee was, or concurrently is being, submitted for recordation pursuant to 37 CFR 3.11.

[NOTE: A separate copy (i.e., a true copy of the original assignment document(s)) must be submitted to Assignment Division in accordance with 37 CFR Part 3, to record the assignment in the records of the USPTO. See MPEP 302.08]

The undersigned (whose title is supplied below) is authorized to act on behalf of the assignee.

/Mark Stirrat/	5/17/2018
Signature	Date
Mark Stirrat	50,756
Printed or Typed Name	Title or Registration Number

Privacy Act Statement

The **Privacy Act of 1974 (P.L. 93-579)** requires that you be given certain information in connection with your submission of the attached form related to a patent application or patent. Accordingly, pursuant to the requirements of the Act, please be advised that: (1) the general authority for the collection of this information is 35 U.S.C. 2(b)(2); (2) furnishing of the information solicited is voluntary; and (3) the principal purpose for which the information is used by the U.S. Patent and Trademark Office is to process and/or examine your submission related to a patent application or patent. If you do not furnish the requested information, the U.S. Patent and Trademark Office may not be able to process and/or examine your submission, which may result in termination of proceedings or abandonment of the application or expiration of the patent.

The information provided by you in this form will be subject to the following routine uses:

1. The information on this form will be treated confidentially to the extent allowed under the Freedom of Information Act (5 U.S.C. 552) and the Privacy Act (5 U.S.C 552a). Records from this system of records may be disclosed to the Department of Justice to determine whether disclosure of these records is required by the Freedom of Information Act.
2. A record from this system of records may be disclosed, as a routine use, in the course of presenting evidence to a court, magistrate, or administrative tribunal, including disclosures to opposing counsel in the course of settlement negotiations.
3. A record in this system of records may be disclosed, as a routine use, to a Member of Congress submitting a request involving an individual, to whom the record pertains, when the individual has requested assistance from the Member with respect to the subject matter of the record.
4. A record in this system of records may be disclosed, as a routine use, to a contractor of the Agency having need for the information in order to perform a contract. Recipients of information shall be required to comply with the requirements of the Privacy Act of 1974, as amended, pursuant to 5 U.S.C. 552a(m).
5. A record related to an International Application filed under the Patent Cooperation Treaty in this system of records may be disclosed, as a routine use, to the International Bureau of the World Intellectual Property Organization, pursuant to the Patent Cooperation Treaty.
6. A record in this system of records may be disclosed, as a routine use, to another federal agency for purposes of National Security review (35 U.S.C. 181) and for review pursuant to the Atomic Energy Act (42 U.S.C. 218(c)).
7. A record from this system of records may be disclosed, as a routine use, to the Administrator, General Services, or his/her designee, during an inspection of records conducted by GSA as part of that agency's responsibility to recommend improvements in records management practices and programs, under authority of 44 U.S.C. 2904 and 2906. Such disclosure shall be made in accordance with the GSA regulations governing inspection of records for this purpose, and any other relevant (*i.e.*, GSA or Commerce) directive. Such disclosure shall not be used to make determinations about individuals.
8. A record from this system of records may be disclosed, as a routine use, to the public after either publication of the application pursuant to 35 U.S.C. 122(b) or issuance of a patent pursuant to 35 U.S.C. 151. Further, a record may be disclosed, subject to the limitations of 37 CFR 1.14, as a routine use, to the public if the record was filed in an application which became abandoned or in which the proceedings were terminated and which application is referenced by either a published application, an application open to public inspection or an issued patent.
9. A record from this system of records may be disclosed, as a routine use, to a Federal, State, or local law enforcement agency, if the USPTO becomes aware of a violation or potential violation of law or regulation.

UNITED STATES PATENT AND TRADEMARK OFFICE

UNITED STATES DEPARTMENT OF COMMERCE
United States Patent and Trademark Office
Address: COMMISSIONER FOR PATENTS
P.O. Box 1450
Alexandria, Virginia 22313-1450
www.uspto.gov

APPLICATION NUMBER	FILING OR 371(C) DATE	FIRST NAMED APPLICANT	ATTY. DOCKET NO./TITLE
15/061,774	03/04/2016	Wesley Scott Harper	A0130.0090.C1C1

CONFIRMATION NO. 5923

95508
One LLP
4000 MacArthur Blvd.
East Tower, Suite 500
Newport Beach, CA 92660

PUBLICATION NOTICE

OC000000084064986

Title:METHODS AND SYSTEMS FOR EARLY SIGNAL ATTENUATION DETECTION AND PROCESSING

Publication No.US-2016-0183857-A1
Publication Date:06/30/2016

NOTICE OF PUBLICATION OF APPLICATION

The above-identified application will be electronically published as a patent application publication pursuant to 37 CFR 1.211, et seq. The patent application publication number and publication date are set forth above.

The publication may be accessed through the USPTO's publically available Searchable Databases via the Internet at www.uspto.gov. The direct link to access the publication is currently http://www.uspto.gov/patft/.

The publication process established by the Office does not provide for mailing a copy of the publication to applicant. A copy of the publication may be obtained from the Office upon payment of the appropriate fee set forth in 37 CFR 1.19(a)(1). Orders for copies of patent application publications are handled by the USPTO's Office of Public Records. The Office of Public Records can be reached by telephone at (703) 308-9726 or (800) 972-6382, by facsimile at (703) 305-8759, by mail addressed to the United States Patent and Trademark Office, Office of Public Records, Alexandria, VA 22313-1450 or via the Internet.

In addition, information on the status of the application, including the mailing date of Office actions and the dates of receipt of correspondence filed in the Office, may also be accessed via the Internet through the Patent Electronic Business Center at www.uspto.gov using the public side of the Patent Application Information and Retrieval (PAIR) system. The direct link to access this status information is currently http://pair.uspto.gov/. Prior to publication, such status information is confidential and may only be obtained by applicant using the private side of PAIR.

Further assistance in electronically accessing the publication, or about PAIR, is available by calling the Patent Electronic Business Center at 1-866-217-9197.

Office of Data Managment, Application Assistance Unit (571) 272-4000, or (571) 272-4200, or 1-888-786-0101

PATENT APPLICATION FEE DETERMINATION RECORD Substitute for Form PTO-875	Application or Docket Number 15/061,774

APPLICATION AS FILED - PART I

FOR	(Column 1) NUMBER FILED	(Column 2) NUMBER EXTRA	SMALL ENTITY RATE($)	SMALL ENTITY FEE($)	OR	OTHER THAN SMALL ENTITY RATE($)	OTHER THAN SMALL ENTITY FEE($)
BASIC FEE (37 CFR 1.16(a), (b), or (c))	N/A	N/A	N/A			N/A	280
SEARCH FEE (37 CFR 1.16(k), (i), or (m))	N/A	N/A	N/A			N/A	600
EXAMINATION FEE (37 CFR 1.16(o), (p), or (q))	N/A	N/A	N/A			N/A	720
TOTAL CLAIMS (37 CFR 1.16(i))	18 minus 20 =	*			OR	x 80 =	0.00
INDEPENDENT CLAIMS (37 CFR 1.16(h))	2 minus 3 =	*				x 420 =	0.00
APPLICATION SIZE FEE (37 CFR 1.16(s))	If the specification and drawings exceed 100 sheets of paper, the application size fee due is $310 ($155 for small entity) for each additional 50 sheets or fraction thereof. See 35 U.S.C. 41(a)(1)(G) and 37 CFR 1.16(s).						0.00
MULTIPLE DEPENDENT CLAIM PRESENT (37 CFR 1.16(j))							0.00
* If the difference in column 1 is less than zero, enter "0" in column 2.			TOTAL			TOTAL	1600

APPLICATION AS AMENDED - PART II

		(Column 1) CLAIMS REMAINING AFTER AMENDMENT		(Column 2) HIGHEST NUMBER PREVIOUSLY PAID FOR	(Column 3) PRESENT EXTRA	SMALL ENTITY RATE($)	SMALL ENTITY ADDITIONAL FEE($)	OR	OTHER THAN SMALL ENTITY RATE($)	OTHER THAN SMALL ENTITY ADDITIONAL FEE($)
AMENDMENT A	Total (37 CFR 1.16(i))	*	Minus	**	=	x =		OR	x =	
AMENDMENT A	Independent (37 CFR 1.16(h))	*	Minus	***	=	x =		OR	x =	
AMENDMENT A	Application Size Fee (37 CFR 1.16(s))									
AMENDMENT A	FIRST PRESENTATION OF MULTIPLE DEPENDENT CLAIM (37 CFR 1.16(j))							OR		
						TOTAL ADD'L FEE		OR	TOTAL ADD'L FEE	

		(Column 1) CLAIMS REMAINING AFTER AMENDMENT		(Column 2) HIGHEST NUMBER PREVIOUSLY PAID FOR	(Column 3) PRESENT EXTRA	RATE($)	ADDITIONAL FEE($)	OR	RATE($)	ADDITIONAL FEE($)
AMENDMENT B	Total (37 CFR 1.16(i))	*	Minus	**	=	x =		OR	x =	
AMENDMENT B	Independent (37 CFR 1.16(h))	*	Minus	***	=	x =		OR	x =	
AMENDMENT B	Application Size Fee (37 CFR 1.16(s))									
AMENDMENT B	FIRST PRESENTATION OF MULTIPLE DEPENDENT CLAIM (37 CFR 1.16(j))							OR		
						TOTAL ADD'L FEE		OR	TOTAL ADD'L FEE	

* If the entry in column 1 is less than the entry in column 2, write "0" in column 3.
** If the "Highest Number Previously Paid For" IN THIS SPACE is less than 20, enter "20".
*** If the "Highest Number Previously Paid For" IN THIS SPACE is less than 3, enter "3".
The "Highest Number Previously Paid For" (Total or Independent) is the highest found in the appropriate box in column 1.

UNITED STATES PATENT AND TRADEMARK OFFICE

UNITED STATES DEPARTMENT OF COMMERCE
United States Patent and Trademark Office
Address: COMMISSIONER FOR PATENTS
P.O. Box 1450
Alexandria, Virginia 22313-1450
www.uspto.gov

APPLICATION NUMBER	FILING or 371(c) DATE	GRP ART UNIT	FIL FEE REC'D	ATTY.DOCKET.NO	TOT CLAIMS	IND CLAIMS
15/061,774	03/04/2016	3735	1600	A0130.0090.C1C1	18	2

CONFIRMATION NO. 5923

FILING RECEIPT

95508
One LLP
4000 MacArthur Blvd.
East Tower, Suite 500
Newport Beach, CA 92660

OC000000081554864

Date Mailed: 03/22/2016

Receipt is acknowledged of this non-provisional patent application. The application will be taken up for examination in due course. Applicant will be notified as to the results of the examination. Any correspondence concerning the application must include the following identification information: the U.S. APPLICATION NUMBER, FILING DATE, NAME OF APPLICANT, and TITLE OF INVENTION. Fees transmitted by check or draft are subject to collection. Please verify the accuracy of the data presented on this receipt. **If an error is noted on this Filing Receipt, please submit a written request for a Filing Receipt Correction. Please provide a copy of this Filing Receipt with the changes noted thereon. If you received a "Notice to File Missing Parts" for this application, please submit any corrections to this Filing Receipt with your reply to the Notice. When the USPTO processes the reply to the Notice, the USPTO will generate another Filing Receipt incorporating the requested corrections**

Inventor(s)

Wesley Scott Harper, Alameda, CA;

Applicant(s)

ABBOTT DIABETES CARE INC., Alameda, CA;

Power of Attorney: None

Domestic Priority data as claimed by applicant

This application is a CON of 13/925,694 06/24/2013
which is a CON of 12/769,635 04/28/2010 PAT 8483967
which claims benefit of 61/173,600 04/29/2009

Foreign Applications for which priority is claimed (You may be eligible to benefit from the **Patent Prosecution Highway** program at the USPTO. Please see http://www.uspto.gov for more information.) - None.
Foreign application information must be provided in an Application Data Sheet in order to constitute a claim to foreign priority. See 37 CFR 1.55 and 1.76.

Permission to Access Application via Priority Document Exchange: Yes

Permission to Access Search Results: No

Applicant may provide or rescind an authorization for access using Form PTO/SB/39 or Form PTO/SB/69 as appropriate.

If Required, Foreign Filing License Granted: 03/21/2016

The country code and number of your priority application, to be used for filing abroad under the Paris Convention, is **US 15/061,774**

Projected Publication Date: 06/30/2016

Non-Publication Request: No

Early Publication Request: No
Title

METHODS AND SYSTEMS FOR EARLY SIGNAL ATTENUATION DETECTION AND PROCESSING

Preliminary Class

600

Statement under 37 CFR 1.55 or 1.78 for AIA (First Inventor to File) Transition Applications: No

PROTECTING YOUR INVENTION OUTSIDE THE UNITED STATES

Since the rights granted by a U.S. patent extend only throughout the territory of the United States and have no effect in a foreign country, an inventor who wishes patent protection in another country must apply for a patent in a specific country or in regional patent offices. Applicants may wish to consider the filing of an international application under the Patent Cooperation Treaty (PCT). An international (PCT) application generally has the same effect as a regular national patent application in each PCT-member country. The PCT process **simplifies** the filing of patent applications on the same invention in member countries, but **does not result** in a grant of "an international patent" and does not eliminate the need of applicants to file additional documents and fees in countries where patent protection is desired.

Almost every country has its own patent law, and a person desiring a patent in a particular country must make an application for patent in that country in accordance with its particular laws. Since the laws of many countries differ in various respects from the patent law of the United States, applicants are advised to seek guidance from specific foreign countries to ensure that patent rights are not lost prematurely.

Applicants also are advised that in the case of inventions made in the United States, the Director of the USPTO must issue a license before applicants can apply for a patent in a foreign country. The filing of a U.S. patent application serves as a request for a foreign filing license. The application's filing receipt contains further information and guidance as to the status of applicant's license for foreign filing.

Applicants may wish to consult the USPTO booklet, "General Information Concerning Patents" (specifically, the section entitled "Treaties and Foreign Patents") for more information on timeframes and deadlines for filing foreign patent applications. The guide is available either by contacting the USPTO Contact Center at 800-786-9199, or it can be viewed on the USPTO website at http://www.uspto.gov/web/offices/pac/doc/general/index.html.

For information on preventing theft of your intellectual property (patents, trademarks and copyrights), you may wish to consult the U.S. Government website, http://www.stopfakes.gov. Part of a Department of Commerce initiative, this website includes self-help "toolkits" giving innovators guidance on how to protect intellectual property in specific countries such as China, Korea and Mexico. For questions regarding patent enforcement issues, applicants may call the U.S. Government hotline at 1-866-999-HALT (1-866-999-4258).

LICENSE FOR FOREIGN FILING UNDER

Title 35, United States Code, Section 184

Title 37, Code of Federal Regulations, 5.11 & 5.15

GRANTED

The applicant has been granted a license under 35 U.S.C. 184, if the phrase "IF REQUIRED, FOREIGN FILING LICENSE GRANTED" followed by a date appears on this form. Such licenses are issued in all applications where the conditions for issuance of a license have been met, regardless of whether or not a license may be required as set forth in 37 CFR 5.15. The scope and limitations of this license are set forth in 37 CFR 5.15(a) unless an earlier license has been issued under 37 CFR 5.15(b). The license is subject to revocation upon written notification. The date indicated is the effective date of the license, unless an earlier license of similar scope has been granted under 37 CFR 5.13 or 5.14.

This license is to be retained by the licensee and may be used at any time on or after the effective date thereof unless it is revoked. This license is automatically transferred to any related applications(s) filed under 37 CFR 1.53(d). This license is not retroactive.

The grant of a license does not in any way lessen the responsibility of a licensee for the security of the subject matter as imposed by any Government contract or the provisions of existing laws relating to espionage and the national security or the export of technical data. Licensees should apprise themselves of current regulations especially with respect to certain countries, of other agencies, particularly the Office of Defense Trade Controls, Department of State (with respect to Arms, Munitions and Implements of War (22 CFR 121-128)); the Bureau of Industry and Security, Department of Commerce (15 CFR parts 730-774); the Office of Foreign AssetsControl, Department of Treasury (31 CFR Parts 500+) and the Department of Energy.

NOT GRANTED

No license under 35 U.S.C. 184 has been granted at this time, if the phrase "IF REQUIRED, FOREIGN FILING LICENSE GRANTED" DOES NOT appear on this form. Applicant may still petition for a license under 37 CFR 5.12, if a license is desired before the expiration of 6 months from the filing date of the application. If 6 months has lapsed from the filing date of this application and the licensee has not received any indication of a secrecy order under 35 U.S.C. 181, the licensee may foreign file the application pursuant to 37 CFR 5.15(b).

SelectUSA

The United States represents the largest, most dynamic marketplace in the world and is an unparalleled location for business investment, innovation, and commercialization of new technologies. The U.S. offers tremendous resources and advantages for those who invest and manufacture goods here. Through SelectUSA, our nation works to promote and facilitate business investment. SelectUSA provides information assistance to the international investor community; serves as an ombudsman for existing and potential investors; advocates on behalf of U.S. cities, states, and regions competing for global investment; and counsels U.S. economic development organizations on investment attraction best practices. To learn more about why the United States is the best country in the world to develop technology, manufacture products, deliver services, and grow your business, visit http://www.SelectUSA.gov or call +1-202-482-6800.

Docket Nos.: A0130.0090.C1C1
9368USC2

IN THE UNITED STATES PATENT AND TRADEMARK OFFICE

In re Patent Application of:
Wesley Scott Harper

Application No.: Not yet assigned

Confirmation No.: Not yet assigned

Filed: March 4, 2016

Art Unit: Not yet assigned

For: METHODS AND SYSTEMS FOR EARLY SIGNAL ATTENUATION DETECTION AND PROCESSING

Examiner: Not yet assigned

PRELIMINARY AMENDMENT

EFS Web
Commissioner for Patents

Dear Madam:

INTRODUCTORY COMMENTS

Prior to examination on the merits, please see the following:

Amendments to the Claims beginning on page 2 of this paper; and

Remarks beginning on page 6 of this paper.

AMENDMENTS TO THE CLAIMS

This listing of claims replaces all previous versions of the claims in the application.

1-22. (Cancelled)

23. (New) A method of monitoring for and responding to an early signal attenuation condition associated with an analyte sensor of an analyte monitoring system that includes one or more processors, wherein the analyte sensor is in a user's body, the method comprising:

detecting, with the one or more processors, that sensor data was collected by the analyte sensor during a time period in which the early signal attenuation condition was present;

storing the sensor data collected during the time period;

disabling, with the one or more processors, an output of sensor data collected during the time period in which the early signal attenuation condition was present such that a gap exists in any output of sensor data from that time period;

retrieving the stored sensor data collected during the time period; and

processing, with the one or more processors, the retrieved sensor data collected during the time period such that the gap in the output of the sensor data is at least partially filled.

24. (New) The method of claim 23, wherein the processing of the retrieved sensor data is performed retrospectively after detecting, with the one or more processors, that the early signal attenuation condition is no longer present.

25. (New) The method of claim 23, further comprising, after disabling the output of sensor data and prior to processing the retrieved sensor data:

detecting, with the one or more processors, that the early signal attenuation condition is not present.

26. (New) The method of claim 23, wherein the sensor data is stored with time information associated with the time period.

27. (New) The method of claim 23, further comprising outputting a first graphical representation of the sensor data against time with the gap existing in the time period in which the early signal attenuation condition was present.

28. (New) The method of claim 26, further comprising, after processing the retrieved sensor data, outputting a second graphical representation of the sensor data against time with the gap at least partially filled.

29. (New) The method of claim 23, wherein disabling, with the one or more processors, the output of sensor data collected during the time period in which the early signal attenuation condition was present comprises disabling, with the one or more processors, all displayed output of sensor data collected during the time period in which the early signal attenuation condition was present such that the gap exists in any output of sensor data from that time period.

30. (New) The method of claim 23, wherein the analyte sensor comprises a plurality of electrodes including a working electrode, wherein the working electrode comprises an analyte-responsive enzyme and a mediator, wherein at least one of the analyte-responsive enzyme and the mediator is chemically bonded to a polymer disposed on the working electrode, and wherein at least one of the analyte-responsive enzyme and the mediator is crosslinked with the polymer.

31. (New) The method of claim 23, wherein the sensor data comprises glucose concentration data.

32. (New) An analyte monitoring system, comprising:

an interface configured to receive sensor data collected by an analyte sensor within a user's body;

one or more processors; and

a memory device for storing instructions which, when executed by the one or more processors, causes the one or more processors to:

detect that sensor data was collected by the analyte sensor during a time period in which an early signal attenuation condition was present;

disable an output of sensor data collected during the time period in which the early signal attenuation condition was present such any output of sensor data from that time period comprises a gap;

retrieve stored sensor data collected during the time period in which the early signal attenuation condition was present; and

process the retrieved sensor data collected during the time period to at least partially fill that the gap in any output of the sensor data.

33. (New) The system of claim 32, wherein the memory device stores instructions which, when executed by the one or more processors, further causes the one or more processors to, after disablement of the output of sensor data, detect that the early signal attenuation condition is not present.

34. (New) The system of claim 32, wherein the memory device stores instructions which, when executed by the one or more processors, further causes the one or more processors to, cause the output of a first graphical representation of the sensor data against time with the gap present in the time period in which the early signal attenuation condition was present.

35. (New) The system of claim 34, wherein the memory device stores instructions which, when executed by the one or more processors, further causes the one or more processors to, after processing the retrieved sensor data, cause the output a second graphical representation of the sensor data against time with the gap at least partially filled.

36. (New) The system of claim 32, wherein the memory device stores instructions which, when executed by the one or more processors, further causes the one or more processors to, disable all displayed output of sensor data collected during the time period in which the early signal attenuation condition was present such that the gap exists in any output of sensor data from that time period.

37. (New) The system of claim 32, wherein the sensor data comprises glucose concentration data.

38. (New) The system of claim 32, further comprising the analyte sensor.

39. (New) The system of claim 38, wherein the analyte sensor comprises a plurality of electrodes including a working electrode, wherein the working electrode comprises an analyte-responsive enzyme and a mediator, wherein at least one of the analyte-responsive enzyme and the mediator is chemically bonded to a polymer disposed on the working electrode, and wherein at least one of the analyte-responsive enzyme and the mediator is crosslinked with the polymer.

40. (New) The system of claim 32, further comprising a mobile phone that comprises the interface, the one or more processors, and the memory device.

REMARKS

Claims 1-22 have been canceled and new claims 23-40 have been added. Examination of these new claims is respectfully requested.

Cancelation of the claims is made without prejudice and solely to advance prosecution of this application and are not intended as a disavowal of any subject matter. Accordingly, by this response, Applicants do not concede that previously pending claims are not patentable.

Applicants reserve the right to pursue claims to any subject matter supported by the disclosure of this application in one or more continuation and/or divisional applications at a later time, including the subject matter of any pre-amended and/or cancelled claims, including broader and narrower claims, and including any subject matter found to be disclaimed herein or by any prior prosecution (should such subject matter be found to be disclaimed despite Applicants' statement herein of no such disclaimer). Accordingly, Applicants do not make any disclaimers or disavowals of any subject matter supported by the present disclosure.

In view of the foregoing, Applicants respectfully submit that all pending claims are allowable, and request the Examiner's early examination of the pending claims in the present application. In the event that the Examiner deems a telephonic or in person discussion would be helpful in advancing the prosecution of the present application, Applicants respectfully request the Examiner to contact Applicants' representative at (949) 444-5970.

Dated: March 4, 2016

Respectfully submitted,

/Mark Stirrat/
Mark Stirrat
Registration No.: 50,756
ONE LLP
4000 MacArthur Blvd.
East Tower, Suite 500
Newport Beach, CA 92660
Attorney for Applicant

Electronic Patent Application Fee Transmittal

Application Number:	
Filing Date:	
Title of Invention:	METHODS AND SYSTEMS FOR EARLY SIGNAL ATTENUATION DETECTION AND PROCESSING
First Named Inventor/Applicant Name:	Wesley Scott Harper
Filer:	Mark Andrew Stirrat/Alana Fredericks
Attorney Docket Number:	A0130.0090.C1C1

Filed as Large Entity

Filing Fees for Utility under 35 USC 111(a)

Description	Fee Code	Quantity	Amount	Sub-Total in USD($)
Basic Filing:				
Utility application filing	1011	1	280	280
Utility Search Fee	1111	1	600	600
Utility Examination Fee	1311	1	720	720
Pages:				
Claims:				
Miscellaneous-Filing:				
Petition:				
Patent-Appeals-and-Interference:				

Description	Fee Code	Quantity	Amount	Sub-Total in USD($)
Post-Allowance-and-Post-Issuance:				
Extension-of-Time:				
Miscellaneous:				
			Total in USD ($)	**1600**

Electronic Acknowledgement Receipt

EFS ID:	25112017
Application Number:	15061774
International Application Number:	
Confirmation Number:	5923
Title of Invention:	METHODS AND SYSTEMS FOR EARLY SIGNAL ATTENUATION DETECTION AND PROCESSING
First Named Inventor/Applicant Name:	Wesley Scott Harper
Customer Number:	95508
Filer:	Mark Andrew Stirrat/Alana Fredericks
Filer Authorized By:	Mark Andrew Stirrat
Attorney Docket Number:	A0130.0090.C1C1
Receipt Date:	04-MAR-2016
Filing Date:	
Time Stamp:	18:19:11
Application Type:	Utility under 35 USC 111(a)

Payment information:

Submitted with Payment	yes
Payment Type	Credit Card
Payment was successfully received in RAM	$1600
RAM confirmation Number	5586
Deposit Account	
Authorized User	
The Director of the USPTO is hereby authorized to charge indicated fees and credit any overpayment as follows:	

File Listing:

Document Number	Document Description	File Name	File Size(Bytes)/ Message Digest	Multi Part /.zip	Pages (if appl.)
1	Drawings-only black and white line drawings	9368USC2_A0130_0090_C1C1_Figures.pdf	135148 5d8afb9d7faed4e9021256436353b65ddb3093ee	no	7
Warnings:					
Information:					
2	Oath or Declaration filed	9368USC2_A0130_0090_C1C1_Declaration.pdf	174453 f3f249dab9529e612cb0c6a232c319f8c62ee4e0	no	2
Warnings:					
Information:					
3	Information Disclosure Statement (IDS) Form (SB08)	9368USC2_A0130_0090_C1C1_IDS_1449.pdf	342174 67cfeac2588ccb97fe70a2b3f2f305273ea18594	no	21
Warnings:					
Information:					
This is not an USPTO supplied IDS fillable form					
4	Application Data Sheet	9368USC2_A0130_0090_C1C1_ADS.pdf	1503536 c58769724882b2f1ee0808de50f60f1d42fa2189	no	6
Warnings:					
Information:					
5		9368USC2_A0130_0090_C1C1_Specification.pdf	147181 6cca1d10d2914c1ba927b01b3c7194ba10b49040	yes	25

Multipart Description/PDF files in .zip description

Document Description	Start	End
Specification	1	20
Claims	21	24
Abstract	25	25

Warnings:

Information:

6	Transmittal Letter	9368USC2_A0130_0090_C1C1_IDS_Transmittal.pdf	82785 0dea61b2477f9e9ff208c9c61f9be4ad989771de	no	4
Warnings:					
Information:					
7		9368USC2_A0130_0090_C1C1_Preliminary_Amendment.pdf	91486 95bb4bb633e7c215f1f8b5e1b8c800520fc07995	yes	6

	Multipart Description/PDF files in .zip description		
	Document Description	**Start**	**End**
	Preliminary Amendment	1	1
	Claims	2	5
	Applicant Arguments/Remarks Made in an Amendment	6	6

Warnings:					
Information:					
8	Fee Worksheet (SB06)	fee-info.pdf	35250 5e47bfc21c8d69f143895aed34832deb680c4121	no	2
Warnings:					
Information:					
			Total Files Size (in bytes):	2512013	

This Acknowledgement Receipt evidences receipt on the noted date by the USPTO of the indicated documents, characterized by the applicant, and including page counts, where applicable. It serves as evidence of receipt similar to a Post Card, as described in MPEP 503.

<u>New Applications Under 35 U.S.C. 111</u>
If a new application is being filed and the application includes the necessary components for a filing date (see 37 CFR 1.53(b)-(d) and MPEP 506), a Filing Receipt (37 CFR 1.54) will be issued in due course and the date shown on this Acknowledgement Receipt will establish the filing date of the application.

<u>National Stage of an International Application under 35 U.S.C. 371</u>
If a timely submission to enter the national stage of an international application is compliant with the conditions of 35 U.S.C. 371 and other applicable requirements a Form PCT/DO/EO/903 indicating acceptance of the application as a national stage submission under 35 U.S.C. 371 will be issued in addition to the Filing Receipt, in due course.

<u>New International Application Filed with the USPTO as a Receiving Office</u>
If a new international application is being filed and the international application includes the necessary components for an international filing date (see PCT Article 11 and MPEP 1810), a Notification of the International Application Number and of the International Filing Date (Form PCT/RO/105) will be issued in due course, subject to prescriptions concerning national security, and the date shown on this Acknowledgement Receipt will establish the international filing date of the application.

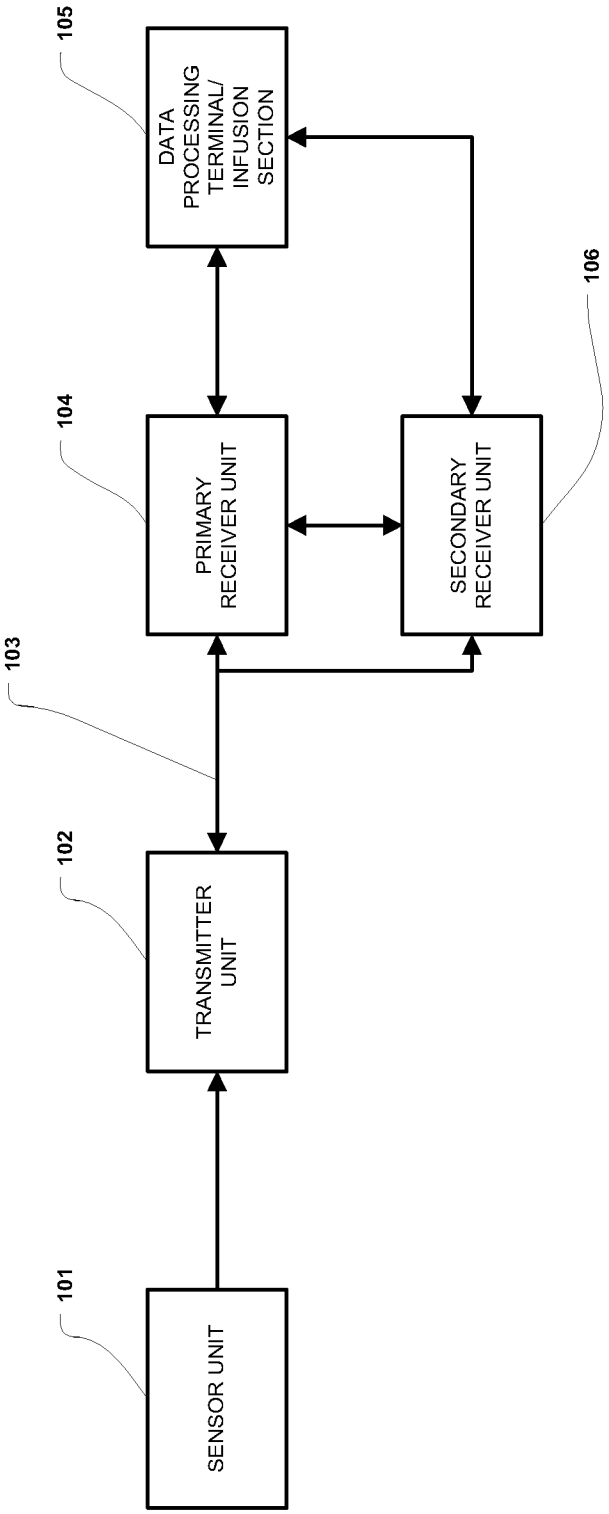
SENSOR UNIT
101
TRANSMITTER UNIT
102
103
PRIMARY RECEIVER UNIT
104
SECONDARY RECEIVER UNIT
106
DATA PROCESSING TERMINAL/ INFUSION SECTION
105

100

FIGURE 1

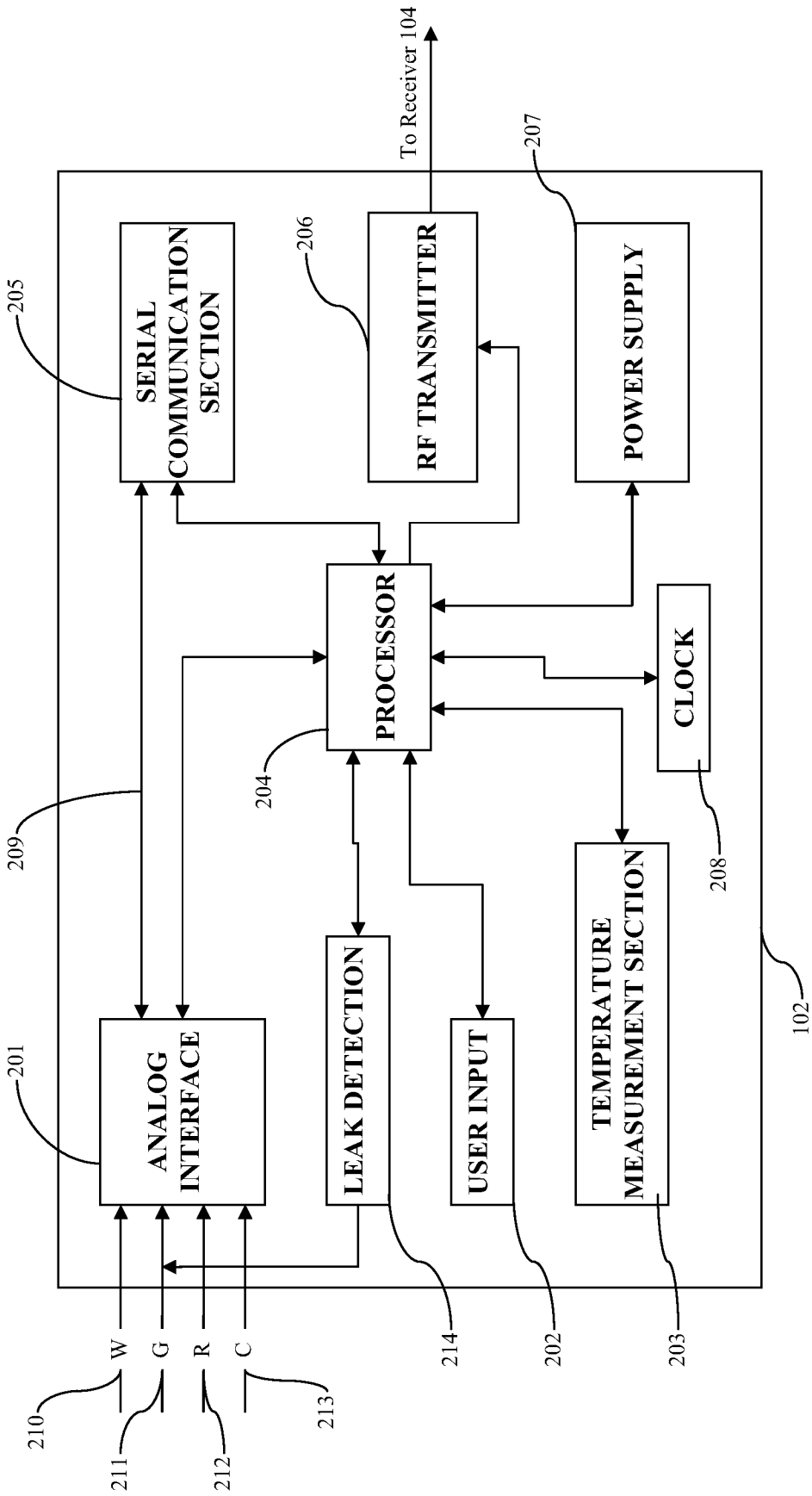
To Receiver 104
SERIAL COMMUNICATION SECTION
RF TRANSMITTER
POWER SUPPLY
PROCESSOR
CLOCK
ANALOG INTERFACE
LEAK DETECTION
USER INPUT
TEMPERATURE MEASUREMENT SECTION
W
G
R
C
205
206
207
204
208
209
201
102
214
202
203
210
211
212
213

FIGURE 2

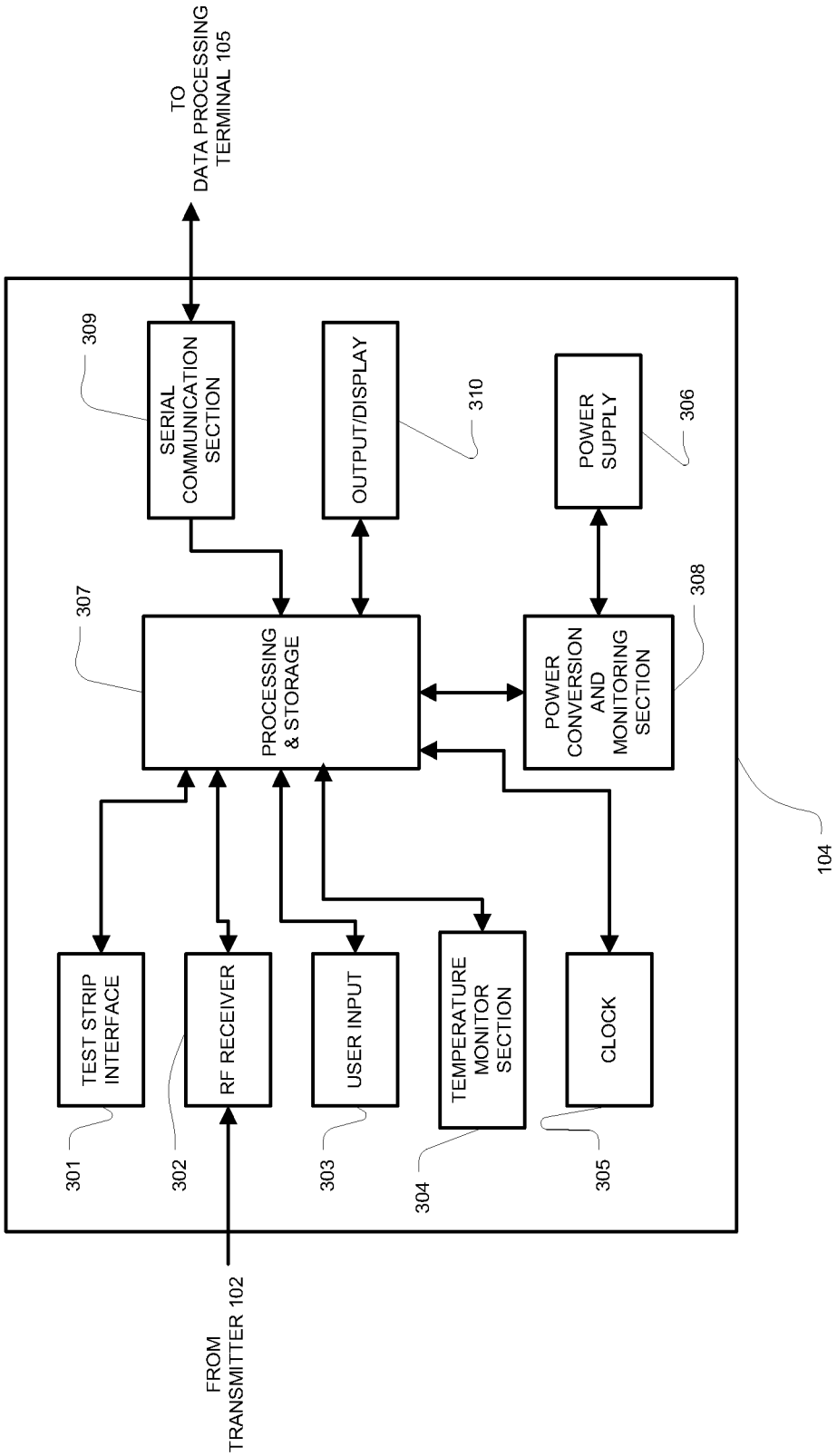
TO
DATA PROCESSING
TERMINAL 105
309
SERIAL
COMMUNICATION
SECTION
OUTPUT/DISPLAY
310
POWER
SUPPLY
306
307
PROCESSING
& STORAGE
POWER
CONVERSION
AND
MONITORING
SECTION
308
104
TEST STRIP
INTERFACE
RF RECEIVER
USER INPUT
TEMPERATURE
MONITOR
SECTION
CLOCK
301
302
303
304
305
FROM
TRANSMITTER 102

FIGURE 3

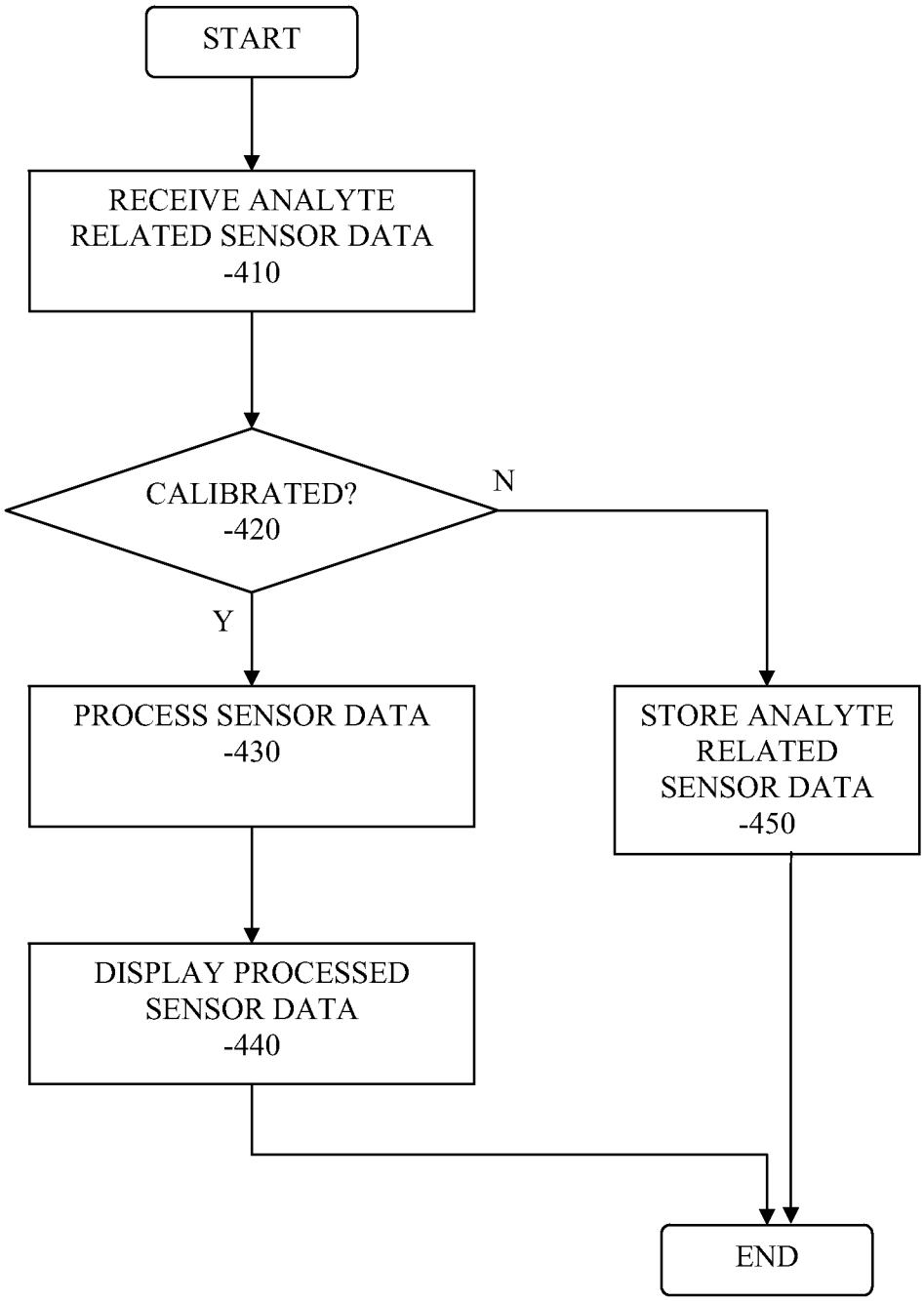
START
RECEIVE ANALYTE RELATED SENSOR DATA -410
CALIBRATED? -420
N
Y
PROCESS SENSOR DATA -430
STORE ANALYTE RELATED SENSOR DATA -450
DISPLAY PROCESSED SENSOR DATA -440
END

FIGURE 4

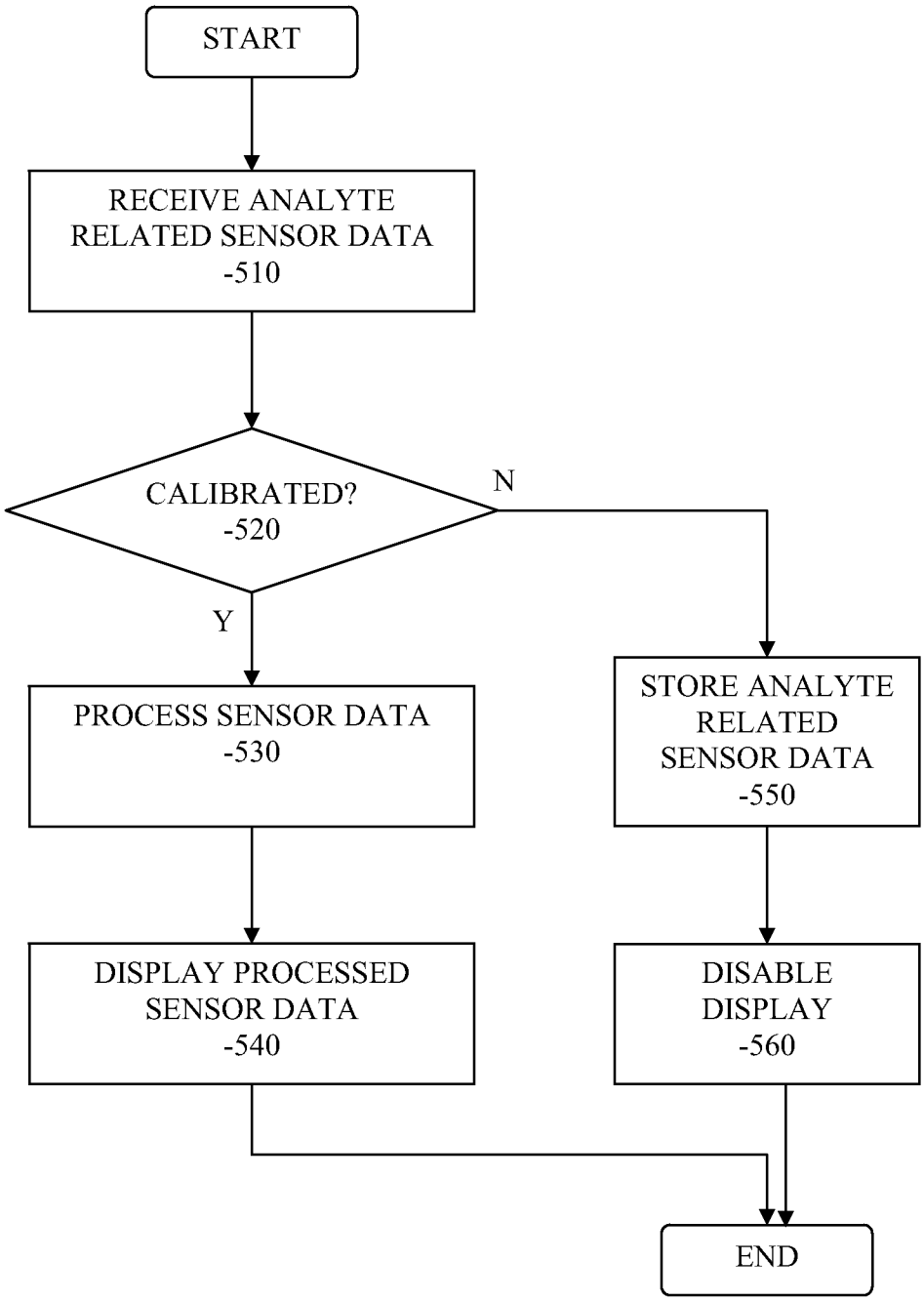
START
RECEIVE ANALYTE RELATED SENSOR DATA -510
CALIBRATED? -520
N
Y
PROCESS SENSOR DATA -530
STORE ANALYTE RELATED SENSOR DATA -550
DISPLAY PROCESSED SENSOR DATA -540
DISABLE DISPLAY -560
END

FIGURE 5

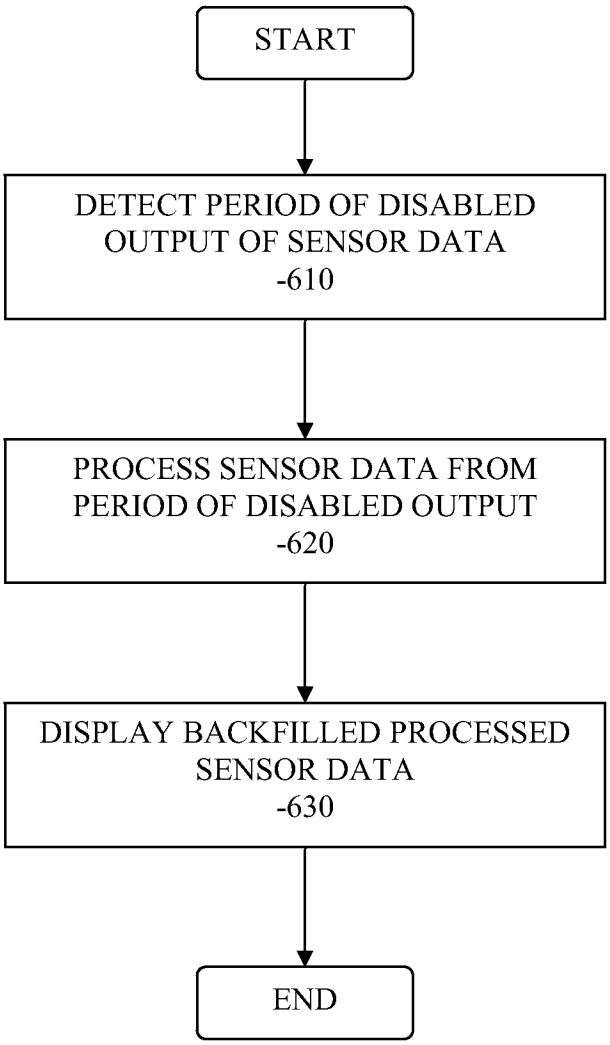
START
DETECT PERIOD OF DISABLED OUTPUT OF SENSOR DATA -610
PROCESS SENSOR DATA FROM PERIOD OF DISABLED OUTPUT -620
DISPLAY BACKFILLED PROCESSED SENSOR DATA -630
END

FIGURE 6

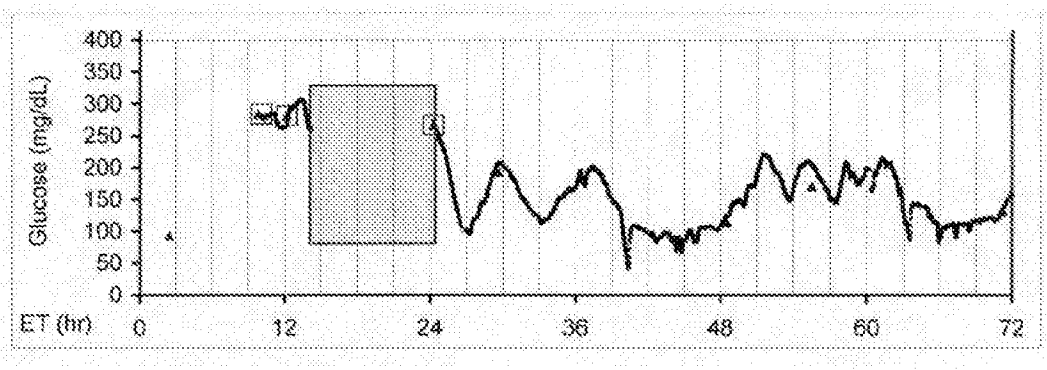

FIGURE 7A

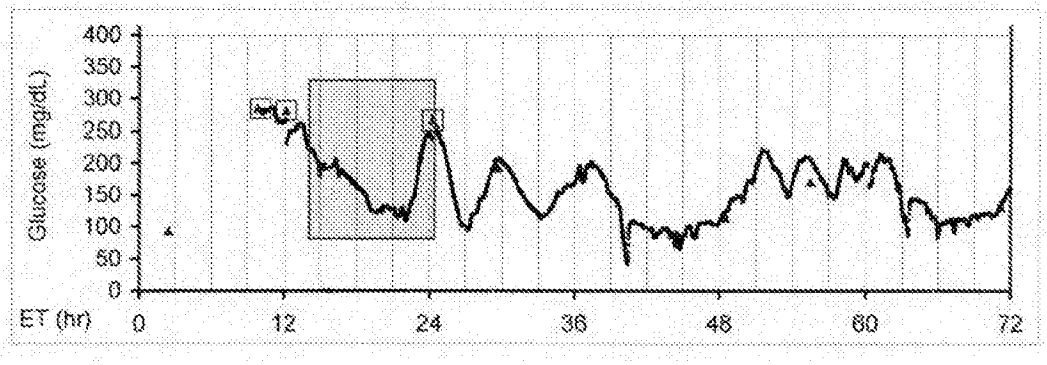

FIGURE 7B

PTO/AIA/08 (06-12)
Approved for use through 01/31/2014. OMB 0651-0032
U.S. Patent and Trademark Office; U.S. DEPARTMENT OF COMMERCE

Under the Paperwork Reduction Act of 1995, no persons are required to respond to a collection of information unless it contains a valid OMB control number.

DECLARATION FOR UTILITY OR DESIGN PATENT APPLICATION (37 CFR 1.63)

☐ Declaration Submitted With Initial Filing OR ■ Declaration Submitted After Initial Filing (surcharge (37 CFR 1.16(f)) required)

Attorney Docket Number	TS-02-180C01
First Named Inventor	Wesley Scott Harper
COMPLETE IF KNOWN	
Application Number	13/925,694
Filing Date	June 24, 2013
Art Unit	1631
Examiner Name	Not Yet Assigned

Method and System for Providing Real Time Analyte Sensor Calibration with Retrospective Backfill

(Title of the Invention)

As a below named inventor, I hereby declare that:

This declaration is directed to:

☐ The attached application,

OR

■ United States Application Number or PCT International application number 13/925,694 filed on June 24, 2013.

The above-identified application was made or authorized to be made by me.

I believe I am the original inventor or an original joint inventor of a claimed invention in the application.

I hereby acknowledge that any willful false statement made in this declaration is punishable under 18 U.S.C. 1001 by fine or imprisonment of not more than five (5) years, or both.

Authorization To Permit Access To Application by Participating Office

|✓| If checked, the undersigned hereby grants the USPTO authority to provide the European Patent Office (EPO), the Japan Patent Office (JPO), the Korean Intellectual Property Office (KIPO), the World Intellectual Property Office (WIPO), and any other intellectual property offices in which a foreign application claiming priority to the above-identified patent application is filed access to the above-identified patent application. See 37 CFR 1.14(c) and (h). This box should not be checked if the applicant does not wish the EPO, JPO, KIPO, WIPO, or other intellectual property office in which a foreign application claiming priority to the above-identified patent application is filed to have access to the above-identified patent application.

In accordance with 37 CFR 1.14(h)(3), access will be provided to a copy of the above-identified patent application with respect to: 1) the above-identified patent application-as-filed; 2) any foreign application to which the above-identified patent application claims priority under 35 U.S.C. 119(a)-(d) if a copy of the foreign application that satisfies the certified copy requirement of 37 CFR 1.55 has been filed in the above-identified patent application; and 3) any U.S. application-as-filed from which benefit is sought in the above-identified patent application.

In accordance with 37 CFR 1.14(c), access may be provided to information concerning the date of filing the Authorization to Permit Access to Application by Participating Offices.

This collection of information is required by 35 U.S.C. 115 and 37 CFR 1.63. The information is required to obtain or retain a benefit by the public which is to file (and by the USPTO to process) an application. Confidentiality is governed by 35 U.S.C. 122 and 37 CFR 1.11 and 1.14. This collection is estimated to take 21 minutes to complete, including gathering, preparing, and submitting the completed application form to the USPTO. Time will vary depending upon the individual case. Any comments on the amount of time you require to complete this form and/or suggestions for reducing this burden, should be sent to the Chief Information Officer, U.S. Patent and Trademark Office, U.S. Department of Commerce, P.O. Box 1450, Alexandria, VA 22313-1450. DO NOT SEND FEES OR COMPLETED FORMS TO THIS ADDRESS. **SEND TO: Commissioner for Patents, P.O. Box 1450, Alexandria, VA 22313-1450.**

If you need assistance in completing the form, call 1-800-PTO-9199 and select option 2.

Under the Paperwork Reduction Act of 1995, no persons are required to respond to a collection of information unless it contains a valid OMB control number.

DECLARATION — Utility or Design Patent Application

Direct all correspondence to:	☒	The address associated with Customer Number:	30349	OR ☐ Correspondence address below

Name		
Address		
City	State	Zip
Country	Telephone	Email

WARNING:

Petitioner/applicant is cautioned to avoid submitting personal information in documents filed in a patent application that may contribute to identity theft. Personal information such as social security numbers, bank account numbers, or credit card numbers (other than a check or credit card authorization form PTO-2038 submitted for payment purposes) is never required by the USPTO to support a petition or an application. If this type of personal information is included in documents submitted to the USPTO, petitioners/applicants should consider redacting such personal information from the documents before submitting them to the USPTO. Petitioner/applicant is advised that the record of a patent application is available to the public after publication of the application (unless a non-publication request in compliance with 37 CFR 1.213(a) is made in the application) or issuance of a patent. Furthermore, the record from an abandoned application may also be available to the public if the application is referenced in a published application or an issued patent (see 37 CFR 1.14). Checks and credit card authorization forms PTO-2038 submitted for payment purposes are not retained in the application file and therefore are not publicly available. Petitioner/applicant is advised that documents which form the record of a patent application (such as the PTO/SB/01) are placed into the Privacy Act system of records DEPARTMENT OF COMMERCE, COMMERCE-PAT-7, System name: *Patent Application Files* . Documents not retained in an application file (such as the PTO-2038) are placed into the Privacy Act system of COMMERCE/PAT-TM-10, System name: *Deposit Accounts and Electronic Funds Transfer Profiles* .

LEGAL NAME OF SOLE OR FIRST INVENTOR:

(*E.g.*, Given Name (first and middle (if any)) and Family Name or Surname)

Wesley Scott Harper

Inventor's Signature		Date (Optional)	
		31 Jul 2013	
Residence: City	State	Country	
Alameda	CA	US	
Mailing Address			
15 Ferro Court			
City	State	Zip	Country
Alameda	CA	94502	US

☐ Additional inventors are being named on the _____ supplemental sheet(s) PTO/AIA/10 attached hereto

Under the Paperwork Reduction Act of 1995, no persons are required to respond to a collection of information unless it contains a valid OMB control number.

Substitute for form 1449/PTO **INFORMATION DISCLOSURE STATEMENT BY APPLICANT** *(Use as many sheets as necessary)*				*Complete if Known*	
				Application Number	To be assigned
				Filing Date	March 4, 2016
				First Named Inventor	Wesley Scott Harper
				Art Unit	To be assigned
				Examiner Name	To be assigned
Sheet	1	of	21	Attorney Docket No: A0130.0090.C1C1	

US PATENT DOCUMENTS					
Examiner Initials*	Cite No.	Document Number Number-Kind Code	Publication Date MM-DD-YYYY	Name of Patentee or Applicant of Cited Document	Pages, Columns, Lines, Where Relevant Passages or Relevant Figures Appear
		3,581,062	05-21-1971	Aston	
		3,926,760	12-16-1975	Allen, et al.	
		3,949,388	04-06-1976	Fuller	
		4,036,749	07-19-1977	Anderson	
		4,055,175	10-25-1977	Clemens, et al.	
		4,129,128	12-12-1978	McFarlane	
		4,245,634	01-20-1981	Albisser, et al.	
		4,327,725	05-04-1982	Cortese, et al.	
		4,344,438	08-17-1982	Schultz	
		4,349,728	09-14-1982	Phillips, et al.	
		4,425,920	01-17-1984	Bourland, et al.	
		4,441,968	04-10-1984	Emmer, et al.	
		4,464,170	08-07-1984	Clemens, et al.	
		4,478,976	10-23-1984	Goertz, et al.	
		4,494,950	01-22-1985	Fischell	
		4,509,531	04-09-1985	Ward	
		4,527,240	07-02-1985	Kvitash	
		4,538,616	09-03-1985	Rogoff	
		4,619,793	10-28-1986	Lee	
		4,671,288	06-09-1987	Gough	
		4,703,756	11-03-1987	Gough, et al.	
		4,731,726	03-15-1988	Allen, III	
		4,749,985	06-07-1988	Corsberg	
		4,757,022	07-12-1988	Shults, et al.	
		4,759,828	07-26-1988	Young, et al.	
		4,777,953	10-18-1988	Ash, et al.	
		4,779,618	10-25-1988	Mund, et al.	
		4,847,785	07-11-1989	Stephens	
		4,854,322	08-08-1989	Ash, et al.	
		4,890,620	01-02-1990	Gough	
		4,925,268	05-15-1990	Iyer, et al.	
		4,953,552	09-04-1990	DeMarzo	
		4,986,271	01-22-1991	Wilkins	
		4,995,402	02-26-1991	Smith, et al.	
		5,000,180	03-19-1991	Kuypers, et al.	
		5,002,054	03-26-1991	Ash, et al.	
		5,019,974	05-28-1991	Beckers	
		5,050,612	09-24-1991	Matsumura	
		5,051,688	09-24-1991	Murase, et al.	

EXAMINER **DATE CONSIDERED**

Substitute Disclosure Statement Form (PTO-1449)
* EXAMINER: Initial if reference considered, whether or not citation is in conformance with MPEP 609. Draw line through citation if not in conformance and not considered. Include copy of this form with next communication to applicant.1 Applicant's unique citation designation number (optional) 2 Applicant is to place a check mark here if English language Translation is attached

Under the Paperwork Reduction Act of 1995, no persons are required to respond to a collection of information unless it contains a valid OMB control number.

Substitute for form 1449/PTO **INFORMATION DISCLOSURE STATEMENT BY APPLICANT** *(Use as many sheets as necessary)*				*Complete if Known*	
				Application Number	To be assigned
				Filing Date	March 4, 2016
				First Named Inventor	Wesley Scott Harper
				Art Unit	To be assigned
				Examiner Name	To be assigned
Sheet	2	of	21	Attorney Docket No: A0130.0090.C1C1	

US PATENT DOCUMENTS					
Examiner Initials*	Cite No.	Document Number Number-Kind Code	Publication Date MM-DD-YYYY	Name of Patentee or Applicant of Cited Document	Pages, Columns, Lines, Where Relevant Passages or Relevant Figures Appear
		5,055,171	10-08-1991	Peck	
		5,082,550	01-21-1992	Rishpon, et al.	
		5,106,365	04-21-1992	Hernandez	
		5,122,925	06-16-1992	Inpyn	
		5,135,004	08-04-1992	Adams, et al.	
		5,165,407	11-24-1992	Wilson, et al.	
		5,202,261	04-13-1993	Musho, et al.	
		5,210,778	05-11-1993	Massart	
		5,228,449	07-20-1993	Christ, et al.	
		5,231,988	08-03-1993	Wernicke, et al.	
		5,246,867	09-21-1993	Lakowicz, et al.	
		5,251,126	10-05-1993	Kahn, et al.	
		5,262,035	11-16-1993	Gregg, et al.	
		5,262,305	11-16-1993	Heller, et al.	
		5,264,104	11-23-1993	Gregg, et al.	
		5,264,105	11-23-1993	Gregg, et al.	
		5,279,294	01-18-1994	Anderson, et al.	
		5,285,792	02-15-1994	Sjoquist, et al.	
		5,293,877	03-15-1994	O'Hara, et al.	
		5,299,571	04-05-1994	Mastrototaro	
		5,320,725	06-14-1994	Gregg, et al.	
		5,322,063	06-21-1994	Allen, et al.	
		5,340,722	08-23-1994	Wolfbeis, et al.	
		5,342,789	08-30-1994	Chick, et al.	
		5,356,786	10-18-1994	Heller, et al.	
		5,360,404	11-01-1994	Novacek, et al.	
		5,372,427	12-13-1994	Padovani, et al.	
		5,379,238	01-03-1995	Stark	
		5,3 84,547	01-24-1995	Lynk, et al.	
		5,390,671	02-21-1995	Lord, et al.	
		5,391,250	02-21-1995	Cheney, II, et al.	
		5,394,877	03-03-1995	Orr, et al.	
		5,402,780	04-04-1995	Faasse, Jr.	
		5,408,999	04-25-1995	Singh, et al.	
		5,410,326	04-25-1995	Goldstein	
		5,411,647	05-02-1995	Johnson, et al.	
		5,431,160	07-11-1995	Wilkins	
		5,431,921	07-11-1995	Thombre	
		5,462,645	10-31-1995	Albery, et al.	

EXAMINER **DATE CONSIDERED**

Substitute Disclosure Statement Form (PTO-1449)
* EXAMINER: Initial if reference considered, whether or not citation is in conformance with MPEP 609. Draw line through citation if not in conformance and not considered. Include copy of this form with next communication to applicant.1 Applicant's unique citation designation number (optional) 2 Applicant is to place a check mark here if English language Translation is attached

Under the Paperwork Reduction Act of 1995, no persons are required to respond to a collection of information unless it contains a valid OMB control number.

Substitute for form 1449/PTO **INFORMATION DISCLOSURE STATEMENT BY APPLICANT** *(Use as many sheets as necessary)*				*Complete if Known*	
				Application Number	To be assigned
				Filing Date	March 4, 2016
				First Named Inventor	Wesley Scott Harper
				Art Unit	To be assigned
				Examiner Name	To be assigned
Sheet	3	of	21	Attorney Docket No: A0130.0090.C1C1	

US PATENT DOCUMENTS					
Examiner Initials*	Cite No.	Document Number Number-Kind Code	Publication Date MM-DD-YYYY	Name of Patentee or Applicant of Cited Document	Pages, Columns, Lines, Where Relevant Passages or Relevant Figures Appear
		5,472,317	12-05-1995	Field, et al.	
		5,489,414	02-06-1996	Schreiber, et al.	
		5,497,772	03-12-1996	Schulman, et al.	
		5,507,288	04-16-1996	Bocker, et al.	
		5,509,410	04-23-1996	Hill, et al.	
		5,514,718	05-07-1996	Lewis, et al.	
		5,531,878	07-02-1996	Vadgama, et al.	
		5,552,997	09-03-1996	Massart	
		5,568,806	10-29-1996	Cheney, II, et al.	
		5,569,186	10-29-1996	Lord, et al.	
		5,582,184	12-10-1996	Erickson, et al.	
		5,586,553	12-24-1996	Halili, et al.	
		5,593,852	01-14-1997	Heller, et al.	
		5,601,435	02-11-1997	Quv	
		5,609,575	03-11-1997	Larson, et al.	
		5,628,310	05-13-1997	Rao, et al.	
		5,640,954	06-24-1997	Pfeiffer, et al.	
		5,653,239	08-05-1997	Pompei, et al.	
		5,665,222	09-09-1997	Heller, et al.	
		5,711,001	01-20-1998	Bussan, et al.	
		5,711,861	01-27-1998	Ward, et al.	
		5,726,646	03-10-1998	Bane, et al.	
		5,735,285	04-07-1998	Albert, et al.	
		5,748,103	05-05-1998	Flach, et al.	
		5,771,891	06-30-1998	Gozani	
		5,772,586	06-30-1998	Heinonen, et al.	
		5,791,344	08-11-1998	Schulman, et al.	
		5,807,375	09-15-1998	Gross, et al.	
		5,875,186	02-23-1999	Belanger, et al.	
		5,899,855	05-04-1999	Brown	
		5,914,026	06-22-1999	Blubaugh, Jr., et al.	
		5,925,021	07-20-1999	Castellano, et al.	
		5,942,979	08-24-1999	Luppino	
		5,951,521	09-14-1999	Mastrototaro, et al.	
		5,957,854	09-28-1999	Besson, et al.	
		5,961,451	10-05-1999	Reber, et al.	
		5,964,993	10-12-1999	Blubaugh, Jr., et al.	
		5,965,380	10-12-1999	Heller, et al.	
		5,971,922	10-26-1999	Arita, et al.	

EXAMINER **DATE CONSIDERED**

Substitute Disclosure Statement Form (PTO-1449)
* EXAMINER: Initial if reference considered, whether or not citation is in conformance with MPEP 609. Draw line through citation if not in conformance and not considered. Include copy of this form with next communication to applicant.1 Applicant's unique citation designation number (optional) 2 Applicant is to place a check mark here if English language Translation is attached

Under the Paperwork Reduction Act of 1995, no persons are required to respond to a collection of information unless it contains a valid OMB control number.

Substitute for form 1449/PTO **INFORMATION DISCLOSURE STATEMENT BY APPLICANT** *(Use as many sheets as necessary)*				*Complete if Known*	
				Application Number	To be assigned
				Filing Date	March 4, 2016
				First Named Inventor	Wesley Scott Harper
				Art Unit	To be assigned
				Examiner Name	To be assigned
Sheet	4	of	21	Attorney Docket No: A0130.0090.C1C1	

US PATENT DOCUMENTS					
Examiner Initials*	Cite No.	Document Number Number-Kind Code	Publication Date MM-DD-YYYY	Name of Patentee or Applicant of Cited Document	Pages, Columns, Lines, Where Relevant Passages or Relevant Figures Appear
		5,972,199	10-26-1999	Heller, et al.	
		5,987,353	11-16-1999	Khatchatrian, et al.	
		5,995,860	11-30-1999	Sun, et al.	
		6,001,067	12-14-1999	Shults, et al.	
		6,004,278	12-21-1999	Botich, et al.	
		6,022,315	02-09-2000	Iliff	
		6,024,699	02-15-2000	Surwit, et al.	
		6,028,413	02-22-2000	Brockmann	
		6,049,727	04-11-2000	Crothall	
		6,052,565	04-18-2000	Ishikura, et al.	
		6,066,243	05-23-2000	Anderson, et al.	
		6,083,710	07-04-2000	Heller, et al.	
		6,088,608	07-11-2000	Schulman, et al.	
		6,091,975	07-18-2000	Daddona, et al.	
		6,091,976	07-18-2000	Pfeiffer, et al.	
		6,093,172	07-25-2000	Funderburk, et al.	
		6,096,364	08-01-2000	Bok, et al.	
		6,103,033	08-15-2000	Say, et al.	
		6,117,290	09-12-2000	Say, et al.	
		6,119,028	09-12-2000	Schulman, et al.	
		6,120,676	09-19-2000	Heller, et al.	
		6,121,009	09-19-2000	Heller, et al.	
		6,121,611	09-19-2000	Lindsay, et al.	
		6,122,351	09-19-2000	Schlueter, Jr., et al.	
		6,129,823	10-10-2000	Hughes, et al.	
		6,134,461	10-17-2000	Say, et al.	
		6,141,573	10-31-2000	Kurnik, et al.	
		6,143,164	11-07-2000	Heller, et al.	
		6,159,147	12-12-2000	Lichter, et al.	
		6,162,611	12-19-2000	Heller, et al.	
		6,175,752	01-16-2001	Say, et al.	
		6,200,265	03-13-2001	Walsh, et al.	
		6,212,416	04-03-2001	Ward, et al.	
		6,219,574	04-17-2001	Cormier, et al.	
		6,248,067	06-19-2001	Causey, III, et al.	
		6,254,586	07-03-2001	Mann, et al.	
		6,270,455	08-07-2001	Brown	
		6,275,717	08-14-2001	Gross, et al.	
		6,283,761	09-04-2001	Joao	

EXAMINER **DATE CONSIDERED**

Substitute Disclosure Statement Form (PTO-1449)
* EXAMINER: Initial if reference considered, whether or not citation is in conformance with MPEP 609. Draw line through citation if not in conformance and not considered. Include copy of this form with next communication to applicant.1 Applicant's unique citation designation number (optional) 2 Applicant is to place a check mark here if English language Translation is attached

Under the Paperwork Reduction Act of 1995, no persons are required to respond to a collection of information unless it contains a valid OMB control number.

Substitute for form 1449/PTO **INFORMATION DISCLOSURE STATEMENT BY APPLICANT** *(Use as many sheets as necessary)*				*Complete if Known*	
				Application Number	To be assigned
				Filing Date	March 4, 2016
				First Named Inventor	Wesley Scott Harper
				Art Unit	To be assigned
				Examiner Name	To be assigned
Sheet	5	of	21	Attorney Docket No: A0130.0090.C1C1	

US PATENT DOCUMENTS					
Examiner Initials*	Cite No.	Document Number Number-Kind Code	Publication Date MM-DD-YYYY	Name of Patentee or Applicant of Cited Document	Pages, Columns, Lines, Where Relevant Passages or Relevant Figures Appear
		6,284,478	09-04-2001	Heller, et al.	
		6,293,925	09-25-2001	Safabash, et al.	
		6,295,506	09-25-2001	Heinonen, et al.	
		6,306,104	10-23-2001	Cunningham, et al.	
		6,309,884	10-30-2001	Cooperet al.	
		6,314,317	11-06-2001	Willis	
		6,329,161	12-11-2001	Helleret al.	
		6,348,640	02-19-2002	Navot, et al.	
		6,359,270	03-19-2002	Bridson	
		6,359,444	03-19-2002	Grimes	
		6,360,888	03-26-2002	McIvor, et al.	
		6,366,794	04-02-2002	Moussy, et al.	
		6,377,828	04-23-2002	Chaiken, et al.	
		6,379,301	04-30-2002	Worthington, et al.	
		6,418,332	07-09-2002	Mastrototaro, et al.	
		6,424,847	07-23-2002	Mastrototaro, et al.	
		6,427,088	07-30-2002	Bowman, IV, et al.	
		6,440,068	08-27-2002	Brown, et al.	
		6,471,689	10-29-2002	Joseph, et al.	
		6,478,736	11-12-2002	Mault	
		6,484,045	11-19-2002	Holker, et al.	
		6,484,046	11-19-2002	Say, et al.	
		6,493,069	12-10-2002	Nagashimada, et al.	
		6,498,043	12-24-2002	Schulman, et al.	
		6,514,718	02-04-2003	Heller, et al.	
		6,546,268	04-08-2003	Ishikawa, et al.	
		6,551,494	04-22-2003	Heller, et al.	
		6,554,798	04-29-2003	Mann, et al.	
		6,558,321	05-06-2003	Burd, et al.	
		6,558,351	05-06-2003	Steil, et al.	
		6,560,471	05-06-2003	Heller, et al.	
		6,561,978	05-13-2003	Conn, et al.	
		6,562,001	05-13-2003	Lebel, et al.	
		6,564,105	05-13-2003	Starkweather, et al.	
		6,565,509	05-20-2003	Say, et al.	
		6,571,128	05-27-2003	Lebel, et al.	
		6,572,542	06-03-2003	Houben, et al.	
		6,574,490	06-03-2003	Abbink, et al.	
		6,576,101	06-10-2003	Heller, et al.	

EXAMINER **DATE CONSIDERED**

Substitute Disclosure Statement Form (PTO-1449)
* EXAMINER: Initial if reference considered, whether or not citation is in conformance with MPEP 609. Draw line through citation if not in conformance and not considered. Include copy of this form with next communication to applicant.1 Applicant's unique citation designation number (optional) 2 Applicant is to place a check mark here if English language Translation is attached

Under the Paperwork Reduction Act of 1995, no persons are required to respond to a collection of information unless it contains a valid OMB control number.

Substitute for form 1449/PTO **INFORMATION DISCLOSURE STATEMENT BY APPLICANT** *(Use as many sheets as necessary)*				*Complete if Known*	
				Application Number	To be assigned
				Filing Date	March 4, 2016
				First Named Inventor	Wesley Scott Harper
				Art Unit	To be assigned
				Examiner Name	To be assigned
Sheet	6	of	21	Attorney Docket No: A0130.0090.C1C1	

US PATENT DOCUMENTS					
Examiner Initials*	Cite No.	Document Number Number-Kind Code	Publication Date MM-DD-YYYY	Name of Patentee or Applicant of Cited Document	Pages, Columns, Lines, Where Relevant Passages or Relevant Figures Appear
		6,577,899	06-10-2003	Lebel, et al.	
		6,579,690	06-17-2003	Bonnecaze, et al.	
		6,585,644	07-01-2003	Lebel, et al.	
		6,591,125	07-08-2003	Buse, et al.	
		6,595,919	07-22-2003	Bemer, et al.	
		6,605,200	08-12-2003	Mao, et al.	
		6,605,201	08-12-2003	Mao, et al.	
		6,607,509	08-19-2003	Bobroff, et al.	
		6,610,012	08-26-2003	Mault	
		6,633,772	10-14-2003	Ford, et al.	
		6,635,014	10-21-2003	Starkweather, et al.	
		6,648,821	11-18-2003	Lebel, et al.	
		6,654,625	11-25-2003	Say, et al.	
		6,658,396	12-02-2003	Tang, et al.	
		6,659,948	12-09-2003	Lebel, et al.	
		6,668,196	12-23-2003	Villegas, et al.	
		6,675,030	01-06-2004	Ciurczak, et al.	
		6,676,816	01-13-2004	Mao, et al.	
		6,687,546	02-03-2004	Lebel, et al.	
		6,689,056	02-10-2004	Kilcoyne, et al.	
		6,694,191	02-17-2004	Starkweather, et al.	
		6,695,860	02-24-2004	Ward, et al.	
		6,702,857	03-09-2004	Brauker, et al.	
		6,733,446	05-11-2004	Lebel, et al.	
		6,740,075	05-25-2004	Lebel, et al.	
		6,741,877	05-25-2004	Shults, et al.	
		6,743,635	06-01-2004	Neel, et al.	
		6,746,582	06-08-2004	Heller, et al.	
		6,758,810	07-06-2004	Lebel, et al.	
		6,770,030	08-03-2004	Schaupp, et al.	
		6,789,195	09-07-2004	Prihoda, et al.	
		6,790,178	09-14-2004	Mault, et al.	
		6,809,653	10-26-2004	Mann, et al.	
		6,810,290	10-26-2004	Lebel, et al.	
		6,811,533	11-02-2004	Lebel, et al.	
		6,811,534	11-02-2004	Bowman, IV, et al.	
		6,813,519	11-02-2004	Lebel, et al.	
		6,837,858	01-04-2005	Cunningham, et al.	
		6,862,465	03-01-2005	Shults, et al.	

EXAMINER **DATE CONSIDERED**

Substitute Disclosure Statement Form (PTO-1449)
* EXAMINER: Initial if reference considered, whether or not citation is in conformance with MPEP 609. Draw line through citation if not in conformance and not considered. Include copy of this form with next communication to applicant.1 Applicant's unique citation designation number (optional) 2 Applicant is to place a check mark here if English language Translation is attached

Under the Paperwork Reduction Act of 1995, no persons are required to respond to a collection of information unless it contains a valid OMB control number.

Substitute for form 1449/PTO **INFORMATION DISCLOSURE STATEMENT BY APPLICANT** *(Use as many sheets as necessary)*				*Complete if Known*	
				Application Number	To be assigned
				Filing Date	March 4, 2016
				First Named Inventor	Wesley Scott Harper
				Art Unit	To be assigned
				Examiner Name	To be assigned
Sheet	7	of	21	Attorney Docket No: A0130.0090.C1C1	

US PATENT DOCUMENTS					
Examiner Initials*	Cite No.	Document Number Number-Kind Code	Publication Date MM-DD-YYYY	Name of Patentee or Applicant of Cited Document	Pages, Columns, Lines, Where Relevant Passages or Relevant Figures Appear
		6,873,268	03-29-2005	Lebel, et al.	
		6,881,551	04-19-2005	Heller, et al.	
		6,892,085	05-10-2005	McIvor, et al.	
		6,895,265	05-17-2005	Silver	
		6,923,763	08-02-2005	Kovatchev, et al.	
		6,931,327	08-16-2005	Goode, Jr., et al.	
		6,932,894	08-23-2005	Mao, et al.	
		6,936,006	08-30-2005	Sabra	
		6,942,518	09-13-2005	Liamos, et al.	
		6,950,708	09-27-2005	Bowman, IV, et al.	
		6,958,705	10-25-2005	Lebel, et al.	
		6,968,294	11-22-2005	Gutta, et al.	
		6,971,274	12-06-2005	Olin	
		6,974,437	12-13-2005	Lebel, et al.	
		6,990,366	01-24-2006	Say, et al.	
		6,997,907	02-14-2006	Safabash, et al.	
		6,998,247	02-14-2006	Monfre, et al.	
		6,999,854	02-14-2006	Roth	
		7,003,336	02-21-2006	Holker, et al.	
		7,003,340	02-21-2006	Say, et al.	
		7,003,341	02-21-2006	Say, et al.	
		7,015,817	03-21-2006	Copley, et al.	
		7,016,713	03-21-2006	Gardner, et al.	
		7,024,245	04-04-2006	Lebel, et al.	
		7,025,774	04-11-2006	Freeman, et al.	
		7,027,848	04-11-2006	Robinson, et al.	
		7,027,931	04-11-2006	Jones, et al.	
		7,041,068	05-09-2006	Freeman, et al.	
		7,041,468	05-09-2006	Drucker, et al.	
		7,046,153	05-16-2006	Oja, et al.	
		7,052,483	05-30-2006	Woicik	
		7,056,302	06-06-2006	Douglas	
		7,074,307	07-11-2006	Simpson, et al.	
		7,081,195	07-25-2006	Simpson, et al.	
		7,092,891	08-15-2006	Maus, et al.	
		7,098,803	08-29-2006	Mann, et al.	
		7,108,778	09-19-2006	Simpson, et al.	
		7,110,803	09-19-2006	Shults, et al.	
		7,113,821	09-26-2006	Sun, et al.	

EXAMINER **DATE CONSIDERED**

Substitute Disclosure Statement Form (PTO-1449)
* EXAMINER: Initial if reference considered, whether or not citation is in conformance with MPEP 609. Draw line through citation if not in conformance and not considered. Include copy of this form with next communication to applicant.1 Applicant's unique citation designation number (optional) 2 Applicant is to place a check mark here if English language Translation is attached

Under the Paperwork Reduction Act of 1995, no persons are required to respond to a collection of information unless it contains a valid OMB control number.

Substitute for form 1449/PTO **INFORMATION DISCLOSURE STATEMENT BY APPLICANT** *(Use as many sheets as necessary)*				*Complete if Known*	
				Application Number	To be assigned
				Filing Date	March 4, 2016
				First Named Inventor	Wesley Scott Harper
				Art Unit	To be assigned
				Examiner Name	To be assigned
Sheet	8	of	21	Attorney Docket No: A0130.0090.C1C1	

US PATENT DOCUMENTS					
Examiner Initials*	Cite No.	Document Number Number-Kind Code	Publication Date MM-DD-YYYY	Name of Patentee or Applicant of Cited Document	Pages, Columns, Lines, Where Relevant Passages or Relevant Figures Appear
		7,123,950	10-17-2006	Mannheimer	
		7,134,999	11-14-2006	Brauker, et al.	
		7,136,689	11-14-2006	Shults, et al.	
		7,153,265	12-26-2006	Vachon	
		7,155,290	12-26-2006	Von Arx, et al.	
		7,171,274	01-30-2007	Starkweather, et al.	
		7,179,226	02-20-2007	Crothall, et al.	
		7,190,988	03-13-2007	Say, et al.	
		7,192,450	03-20-2007	Brauker, et al.	
		7,198,606	04-03-2007	Boecker, et al.	
		7,207,974	04-24-2007	Safabash, et al.	
		7,226,442	06-05-2007	Sheppard, et al.	
		7,226,978	06-05-2007	Tapsak, et al.	
		7,276,029	10-02-2007	Goode, Jr., et al.	
		7,278,983	10-09-2007	Ireland, et al.	
		7,286,894	10-23-2007	Grant, et al.	
		7,299,082	11-20-2007	Feldman, et al.	
		7,310,544	12-18-2007	Brister, et al.	
		7,324,012	01-29-2008	Mann, et al.	
		7,329,239	02-12-2008	Safabash, et al.	
		7,364,592	04-29-2008	Carr-Brendel, et al.	
		7,366,556	04-29-2008	Brister, et al.	
		7,379,765	05-27-2008	Petisce, et al.	
		7,381,184	06-03-2008	Funderburk, et al.	
		7,402,153	07-22-2008	Steil, et al.	
		7,424,318	09-09-2008	Brister, et al.	
		7,429,258	09-30-2008	Angel, et al.	
		7,455,663	11-25-2008	Bikovsky	
		7,460,898	12-02-2008	Brister, et al.	
		7,462,264	12-09-2008	Heller, et al.	
		7,467,003	12-16-2008	Brister, et al.	
		7,471,972	12-30-2008	Rhodes, et al.	
		7,494,465	02-24-2009	Brister, et al.	
		7,497,827	03-03-2009	Brister, et al.	
		7,499,002	03-03-2009	Blasko, et al.	
		7,519,408	04-14-2009	Rasdal, et al.	
		7,583,990	09-01-2009	Goode, Jr., et al.	
		7,591,801	09-22-2009	Brauker, et al.	
		7,599,726	10-06-2009	Goode, Jr., et al.	

EXAMINER **DATE CONSIDERED**

Substitute Disclosure Statement Form (PTO-1449)
* EXAMINER: Initial if reference considered, whether or not citation is in conformance with MPEP 609. Draw line through citation if not in conformance and not considered. Include copy of this form with next communication to applicant.1 Applicant's unique citation designation number (optional) 2 Applicant is to place a check mark here if English language Translation is attached

Under the Paperwork Reduction Act of 1995, no persons are required to respond to a collection of information unless it contains a valid OMB control number.

Substitute for form 1449/PTO **INFORMATION DISCLOSURE STATEMENT BY APPLICANT** *(Use as many sheets as necessary)*				*Complete if Known*	
				Application Number	To be assigned
				Filing Date	March 4, 2016
				First Named Inventor	Wesley Scott Harper
				Art Unit	To be assigned
				Examiner Name	To be assigned
Sheet	9	of	21	Attorney Docket No: A0130.0090.C1C1	

US PATENT DOCUMENTS					
Examiner Initials*	Cite No.	Document Number Number-Kind Code	Publication Date MM-DD-YYYY	Name of Patentee or Applicant of Cited Document	Pages, Columns, Lines, Where Relevant Passages or Relevant Figures Appear
		7,613,491	11-03-2009	Boock, et al.	
		7,615,007	11-10-2009	Shults, et al.	
		7,632,228	12-15-2009	Brauker, et al.	
		7,635,594	12-22-2009	Holmes, et al.	
		7,637,868	12-29-2009	Saint, et al.	
		7,640,048	12-29-2009	Dobbles, et al.	
		7,651,596	01-26-2010	Petisce, et al.	
		7,651,845	01-26-2010	Doyle, III, et al.	
		7,654,956	02-02-2010	Brister, et al.	
		7,657,297	02-02-2010	Simpson, et al.	
		7,697,967	04-13-2010	Stafford	
		7,699,775	04-20-2010	Desai, et al.	
		7,711,402	05-04-2010	Shults, et al.	
		7,713,574	05-11-2010	Brister, et al.	
		7,715,893	05-11-2010	Karnath, et al.	
		7,727,147	06-01-2010	Osorio, et al.	
		7,731,657	06-08-2010	Stafford	
		7,736,310	06-15-2010	Taub	
		7,736,344	06-15-2010	Moberg, et al.	
		7,763,042	07-27-2010	Iio, et al.	
		7,766,829	08-03-2010	Sloan, et al.	
		7,811,231	10-12-2010	Jin, et al.	
		7,813,809	10-12-2010	Strother, et al.	
		7,822,454	10-26-2010	Alden, et al.	
		7,889,069	02-15-2011	Fifolt, et al.	
		7,899,545	03-01-2011	John	
		7,914,460	03-29-2011	Melker, et al.	
		7,938,797	05-10-2011	Estes	
		7,941,200	05-10-2011	Weinert, et al.	
		7,946,985	05-24-2011	Mastrototaro, et al.	
		7,972,296	07-05-2011	Braig, et al.	
		7,976,466	07-12-2011	Ward, et al.	
		7,978,063	07-12-2011	Baldus, et al.	
		8,010,174	08-30-2011	Goode, Jr., et al.	
		8,010,256	08-30-2011	Oowada	
		8,192,394	06-05-2012	Estes, et al.	
		8,282,549	10-09-2012	Brauker, et al.	
		8,597,570	12-03-2013	Terashima, et al.	
		2001/0020124	09-06-2001	Tamada	

EXAMINER **DATE CONSIDERED**

Substitute Disclosure Statement Form (PTO-1449)
* EXAMINER: Initial if reference considered, whether or not citation is in conformance with MPEP 609. Draw line through citation if not in conformance and not considered. Include copy of this form with next communication to applicant.1 Applicant's unique citation designation number (optional) 2 Applicant is to place a check mark here if English language Translation is attached

Under the Paperwork Reduction Act of 1995, no persons are required to respond to a collection of information unless it contains a valid OMB control number.

Substitute for form 1449/PTO **INFORMATION DISCLOSURE STATEMENT BY APPLICANT** *(Use as many sheets as necessary)*				*Complete if Known*	
				Application Number	To be assigned
				Filing Date	March 4, 2016
				First Named Inventor	Wesley Scott Harper
				Art Unit	To be assigned
				Examiner Name	To be assigned
Sheet	10	of	21	Attorney Docket No: A0130.0090.C1C1	

US PATENT DOCUMENTS					
Examiner Initials*	Cite No.	Document Number Number-Kind Code	Publication Date MM-DD-YYYY	Name of Patentee or Applicant of Cited Document	Pages, Columns, Lines, Where Relevant Passages or Relevant Figures Appear
		2001/0037060	11-01-2001	Thompson, et al.	
		2001/0037366	11-01-2001	Webb, et al.	
		2001/0047604	12-06-2001	Valiulis	
		2002/0019022	02-14-2002	Dunn, et al.	
		2002/0054320	05-09-2002	Ogino	
		2002/0095076	07-18-2002	Krausman, et al.	
		2002/0103499	08-01-2002	Perez, et al.	
		2002/0106709	08-08-2002	Potts, et al.	
		2002/0111832	08-15-2002	Judge	
		2002/0128594	09-12-2002	Das, et al.	
		2002/0133107	09-19-2002	Darcey	
		2002/0147135	10-10-2002	Schnell	
		2002/0161288	10-31-2002	Shin, et al.	
		2002/0788748	12-12-2002	Blackwell, et al.	
		2003/0005464	01-02-2003	Gropper, et al.	
		2003/0021729	01-30-2003	Moller, et al.	
		2003/0023461	01-30-2003	Quintanilla, et al.	
		2003/0028089	02-06-2003	Galley, et al.	
		2003/0060692	03-27-2003	Ruchti, et al.	
		2003/0060753	03-27-2003	Starkweather, et al.	
		2003/0114897	06-19-2003	Von Arx, et al.	
		2003/0147515	08-07-2003	Kai, et al.	
		2003/0163351	08-28-2003	Brown	
		2003/0168338	09-11-2003	Gao et al.	
		2003/0199790	10-23-2003	Boecker, et al.	
		2003/0208113	11-06-2003	Mault, et al.	
		2003/0212379	11-13-2003	Bylund, et al.	
		2004/0010207	01-15-2004	Flaherty, et al.	
		2004/0015102	01-22-2004	Cummings, et al.	
		2004/0041749	03-04-2004	Dixon	
		2004/0054263	03-18-2004	Moerman, et al.	
		2004/0060818	04-01-2004	Feldman, et al.	
		2004/0063435	04-01-2004	Sakamoto, et al.	
		2004/0064068	04-01-2004	DeNuzzio, et al.	
		2004/0073266	04-15-2004	Haefner, et al.	
		2004/0078215	04-22-2004	Dahlin, et al.	
		2004/0106858	06-03-2004	Say, et al.	
		2004/0122353	06-24-2004	Shahmirian, et al.	
		2004/0133390	07-08-2004	Osorio, et al.	

EXAMINER **DATE CONSIDERED**

Substitute Disclosure Statement Form (PTO-1449)
* EXAMINER: Initial if reference considered, whether or not citation is in conformance with MPEP 609. Draw line through citation if not in conformance and not considered. Include copy of this form with next communication to applicant.1 Applicant's unique citation designation number (optional) 2 Applicant is to place a check mark here if English language Translation is attached

Under the Paperwork Reduction Act of 1995, no persons are required to respond to a collection of information unless it contains a valid OMB control number.

Substitute for form 1449/PTO **INFORMATION DISCLOSURE STATEMENT BY APPLICANT** *(Use as many sheets as necessary)*				*Complete if Known*	
				Application Number	To be assigned
				Filing Date	March 4, 2016
				First Named Inventor	Wesley Scott Harper
				Art Unit	To be assigned
				Examiner Name	To be assigned
Sheet	11	of	21	Attorney Docket No: A0130.0090.C1C1	

US PATENT DOCUMENTS					
Examiner Initials*	Cite No.	Document Number Number-Kind Code	Publication Date MM-DD-YYYY	Name of Patentee or Applicant of Cited Document	Pages, Columns, Lines, Where Relevant Passages or Relevant Figures Appear
		2004/0135684	07-15-2004	Steinthal, et al.	
		2004/0138588	07-15-2004	Saikley, et al.	
		2004/0147872	07-29-2004	Thompson	
		2004/0152622	08-05-2004	Keith, et al.	
		2004/0167801	08-26-2004	Say, et al.	
		2004/0171921	09-02-2004	Say, et al.	
		2004/0176672	09-09-2004	Silver, et al.	
		2004/0204687	10-14-2004	Mogensen, et al.	
		2004/0204868	10-14-2004	Maynard, et al.	
		2004/0223985	11-11-2004	Dunfiled, et al.	
		2004/0249253	12-09-2004	Racchini, et al.	
		2004/0254433	12-16-2004	Bandis, et al.	
		2004/0254434	12-16-2004	Goodnow, et al.	
		2004/0260478	12-23-2004	Schwamm	
		2004/0267300	12-30-2004	Mace	
		2005/0001024	01-06-2005	Kusaka, et al.	
		2005/0003470	01-06-2005	Nelson, et al.	
		2005/0004494	01-06-2005	Perez, et al.	
		2005/0027177	02-03-2005	Shin, et al.	
		2005/0031689	02-10-2005	Shults, et al.	
		2005/0038680	02-17-2005	McMahon	
		2005/0049179	03-03-2005	Davidson, et al.	
		2005/0070774	03-31-2005	Addison, et al.	
		2005/0090607	04-28-2005	Tapsak, et al.	
		2005/0096511	05-05-2005	Fox, et al.	
		2005/0096516	05-05-2005	Soykan, et al.	
		2005/0113886	05-26-2005	Fischell, et al.	
		2005/0114068	05-26-2005	Chey, et al.	
		2005/0116683	06-02-2005	Cheng, et al.	
		2005/0137530	06-23-2005	Campbell, et al.	
		2005/0173245	08-11-2005	Feldman, et al.	
		2005/0176136	08-11-2005	Burd, et al.	
		2005/0182306	08-18-2005	Sloan	
		2005/0184153	08-25-2005	Auchinleck	
		2005/0187442	08-25-2005	Cho, et al.	
		2005/0195930	09-08-2005	Spital, et al.	
		2005/0204134	09-15-2005	Von Arx, et al.	
		2005/0214892	09-29-2005	Kovatchev, et al.	
		2005/0245799	11-03-2005	Brauker, et al.	

EXAMINER **DATE CONSIDERED**

Substitute Disclosure Statement Form (PTO-1449)
* EXAMINER: Initial if reference considered, whether or not citation is in conformance with MPEP 609. Draw line through citation if not in conformance and not considered. Include copy of this form with next communication to applicant.1 Applicant's unique citation designation number (optional) 2 Applicant is to place a check mark here if English language Translation is attached

Under the Paperwork Reduction Act of 1995, no persons are required to respond to a collection of information unless it contains a valid OMB control number.

Substitute for form 1449/PTO **INFORMATION DISCLOSURE STATEMENT BY APPLICANT** *(Use as many sheets as necessary)*				*Complete if Known*	
				Application Number	To be assigned
				Filing Date	March 4, 2016
				First Named Inventor	Wesley Scott Harper
				Art Unit	To be assigned
				Examiner Name	To be assigned
Sheet	12	of	21	Attorney Docket No: A0130.0090.C1C1	

US PATENT DOCUMENTS					
Examiner Initials*	Cite No.	Document Number Number-Kind Code	Publication Date MM-DD-YYYY	Name of Patentee or Applicant of Cited Document	Pages, Columns, Lines, Where Relevant Passages or Relevant Figures Appear
		2005/0251033	11-10-2005	Scarantino, et al.	
		2005/0277912	12-15-2005	John	
		2006/0001538	01-05-2006	Kraft, et al.	
		2006/0001551	01-05-2006	Kraft, et al.	
		2006/0010098	01-12-2006	Goodnow, et al.	
		2006/0015020	01-19-2006	Neale, et al.	
		2006/0015024	01-19-2006	Brister, et al.	
		2006/0017923	01-26-2006	Ruchti, et al.	
		2006/0020300	01-26-2006	Nghiern, et al.	
		2006/0031094	02-09-2006	Cohen, et al.	
		2006/0079740	04-13-2006	Silver, et al.	
		2006/0091006	05-04-2006	Wang, et al.	
		2006/0142651	06-29-2006	Brister, et al.	
		2006/0154642	07-13-2006	Scannell	
		2006/0166629	07-27-2006	Reggiardo	
		2006/0173406	08-03-2006	Haves, et al.	
		2006/0189863	08-24-2006	Peyser, et al.	
		2006/0193375	08-31-2006	Lee, et al.	
		2006/0222566	10-05-2006	Brauker, et al.	
		2006/0224141	10-05-2006	Rush, et al.	
		2006/0226985	10-12-2006	Goodnow, et al.	
		2006/0247508	11-02-2006	Fennell	
		2006/0247985	11-02-2006	Liamos, et al.	
		2006/0258929	11-16-2006	Goode, et al.	
		2006/0272652	12-07-2006	Stocker, et al.	
		2006/0290496	12-28-2006	Peeters, et al.	
		2006/0293607	12-28-2006	Alt, et al.	
		2007/0010950	01-11-2007	Abensour, et al.	
		2007/0016381	01-18-2007	Karnath, et al.	
		2007/0017983	01-25-2007	Frank, et al.	
		2007/0027381	02-01-2007	Stafford	
		2007/0033074	02-08-2007	Nitzan, et al.	
		2007/0060869	03-15-2007	Tolle, et al.	
		2007/0060979	03-15-2007	Strother, et al.	
		2007/0066956	03-22-2007	Finkel	
		2007/0073129	03-29-2007	Shah, et al.	
		2007/0078320	04-05-2007	Stafford	
		2007/0078321	04-05-2007	Mazza, et al.	
		2007/0078322	04-05-2007	Stafford	

EXAMINER **DATE CONSIDERED**

Substitute Disclosure Statement Form (PTO-1449)
* EXAMINER: Initial if reference considered, whether or not citation is in conformance with MPEP 609. Draw line through citation if not in conformance and not considered. Include copy of this form with next communication to applicant.1 Applicant's unique citation designation number (optional) 2 Applicant is to place a check mark here if English language Translation is attached

Under the Paperwork Reduction Act of 1995, no persons are required to respond to a collection of information unless it contains a valid OMB control number.

Substitute for form 1449/PTO **INFORMATION DISCLOSURE STATEMENT BY APPLICANT** *(Use as many sheets as necessary)*				*Complete if Known*	
				Application Number	To be assigned
				Filing Date	March 4, 2016
				First Named Inventor	Wesley Scott Harper
				Art Unit	To be assigned
				Examiner Name	To be assigned
Sheet	13	of	21	Attorney Docket No: A0130.0090.C1C1	

US PATENT DOCUMENTS					
Examiner Initials*	Cite No.	Document Number Number-Kind Code	Publication Date MM-DD-YYYY	Name of Patentee or Applicant of Cited Document	Pages, Columns, Lines, Where Relevant Passages or Relevant Figures Appear
		2007/0078818	04-05-2007	Zvitz, et al.	
		2007/0093786	04-26-2007	Goldsmith, et al.	
		2007/0149875	06-28-2007	Ouyang, et al.	
		2007/0173706	07-26-2007	Neinast, et al.	
		2007/0173709	07-26-2007	Petisce, et al.	
		2007/0173710	07-26-2007	Petisce, et al.	
		2007/0191702	08-16-2007	Yodfat, et al.	
		2007/0203407	08-30-2007	Hoss, et al.	
		2007/0203539	08-30-2007	Stone, et al.	
		2007/0203966	08-30-2007	Brauker, et al.	
		2007/0208246	09-06-2007	Brauker, et al.	
		2007/0228071	10-04-2007	Kamen, et al.	
		2007/0231846	10-04-2007	Cosentino, et al.	
		2007/0232878	10-04-2007	Kovatchev, et al.	
		2007/0235331	10-11-2007	Simpson, et al.	
		2007/0249922	10-25-2007	Peyser, et al.	
		2007/0255321	11-01-2007	Gerber, et al.	
		2007/0255348	11-01-2007	Holtzclaw	
		2008/0004904	01-03-2008	Tran	
		2008/0009692	01-10-2008	Stafford	
		2008/0033254	02-07-2008	Karnath, et al.	
		2008/0039702	02-14-2008	Hayter, et al.	
		2008/0045824	02-21-2008	Tapsak, et al.	
		2008/0060955	03-13-2008	Goodnow	
		2008/0061961	03-13-2008	John	
		2008/0083617	04-10-2008	Simpson, et al.	
		2008/0092638	04-24-2008	Brenneman, et al.	
		2008/0114228	05-15-2008	McCluskey, et al.	
		2008/0125636	05-29-2008	Ward, et al.	
		2008/0127052	05-29-2008	Rostoker	
		2008/0177149	07-24-2008	Weinert, et al.	
		2008/0194934	08-14-2008	Ray, et al.	
		2008/0194938	08-14-2008	Brister, et al.	
		2008/0197024	08-21-2008	Simpson, et al.	
		2008/0200788	08-21-2008	Brister, et al.	
		2008/0200789	08-21-2008	Brister, et al.	
		2008/0200791	08-21-2008	Simpson, et al.	
		2008/0201325	08-21-2008	Doniger, et al.	
		2008/0208025	08-28-2008	Shults, et al.	

EXAMINER **DATE CONSIDERED**

Substitute Disclosure Statement Form (PTO-1449)
* EXAMINER: Initial if reference considered, whether or not citation is in conformance with MPEP 609. Draw line through citation if not in conformance and not considered. Include copy of this form with next communication to applicant.1 Applicant's unique citation designation number (optional) 2 Applicant is to place a check mark here if English language Translation is attached

Under the Paperwork Reduction Act of 1995, no persons are required to respond to a collection of information unless it contains a valid OMB control number.

Substitute for form 1449/PTO **INFORMATION DISCLOSURE STATEMENT BY APPLICANT** *(Use as many sheets as necessary)*				*Complete if Known*	
				Application Number	To be assigned
				Filing Date	March 4, 2016
				First Named Inventor	Wesley Scott Harper
				Art Unit	To be assigned
				Examiner Name	To be assigned
Sheet	14	of	21	Attorney Docket No: A0130.0090.C1C1	

US PATENT DOCUMENTS					
Examiner Initials*	Cite No.	Document Number Number-Kind Code	Publication Date MM-DD-YYYY	Name of Patentee or Applicant of Cited Document	Pages, Columns, Lines, Where Relevant Passages or Relevant Figures Appear
		2008/0214918	09-04-2008	Brister, et al.	
		2008/0228051	09-18-2008	Shults, et al.	
		2008/0228054	09-18-2008	Shults, et al.	
		2008/0228055	09-18-2008	Sher	
		2008/0234943	09-25-2008	Ray, et al.	
		2008/0242961	10-02-2008	Brister, et al.	
		2008/0242963	10-02-2008	Essenpreis, et al.	
		2008/0254544	10-16-2008	Modzelewski, et al.	
		2008/0262469	10-23-2008	Brister, et al.	
		2008/0269714	10-30-2008	Mastrototaro, et al.	
		2008/0269723	10-30-2008	Mastrototaro, et al.	
		2008/0287764	11-20-2008	Rasdal, et al.	
		2008/0296155	12-04-2008	Shults, et al.	
		2008/0300572	12-04-2008	Rankers, et al.	
		2008/0306434	12-11-2008	Dobbles, et al.	
		2008/0306435	12-11-2008	Karnath, et al.	
		2008/0306444	12-11-2008	Brister, et al.	
		2008/0312859	12-18-2008	Skyggebjerg, et al.	
		2008/0319085	12-25-2008	Wright, et al.	
		2009/0006061	01-01-2009	Thukral, et al.	
		2009/0012377	01-08-2009	Jennewine, et al.	
		2009/0018424	01-15-2009	Karnath, et al.	
		2009/0030294	01-29-2009	Petisce, et al.	
		2009/0036758	02-05-2009	Brauker, et al.	
		2009/0036763	02-05-2009	Brauker, et al.	
		2009/0040022	02-12-2009	Finkenzeller	
		2009/0043181	02-12-2009	Brauker, et al.	
		2009/0048503	02-19-2009	Dalal, et al.	
		2009/0054747	02-26-2009	Fennell	
		2009/0062633	03-05-2009	Brauker, et al.	
		2009/0076356	03-19-2009	Simpson, et al.	
		2009/0076360	03-19-2009	Brister, et al.	
		2009/0082693	03-26-2009	Stafford	
		2009/0085873	04-02-2009	Betts, et al.	
		2009/0088787	04-02-2009	Koike, et al.	
		2009/0093687	04-09-2009	Telfort, et al.	
		2009/0099436	04-16-2009	Brister, et al.	
		2009/0124879	05-14-2009	Brister, et al.	
		2009/0124964	05-14-2009	Leach, et al.	

EXAMINER **DATE CONSIDERED**

Substitute Disclosure Statement Form (PTO-1449)
* EXAMINER: Initial if reference considered, whether or not citation is in conformance with MPEP 609. Draw line through citation if not in conformance and not considered. Include copy of this form with next communication to applicant.1 Applicant's unique citation designation number (optional) 2 Applicant is to place a check mark here if English language Translation is attached

Under the Paperwork Reduction Act of 1995, no persons are required to respond to a collection of information unless it contains a valid OMB control number.

Substitute for form 1449/PTO **INFORMATION DISCLOSURE STATEMENT BY APPLICANT** *(Use as many sheets as necessary)*				*Complete if Known*	
				Application Number	To be assigned
				Filing Date	March 4, 2016
				First Named Inventor	Wesley Scott Harper
				Art Unit	To be assigned
				Examiner Name	To be assigned
Sheet	15	of	21	Attorney Docket No: A0130.0090.C1C1	

US PATENT DOCUMENTS					
Examiner Initials*	Cite No.	Document Number Number-Kind Code	Publication Date MM-DD-YYYY	Name of Patentee or Applicant of Cited Document	Pages, Columns, Lines, Where Relevant Passages or Relevant Figures Appear
		2009/0131768	05-21-2009	Simpson, et al.	
		2009/0131769	05-21-2009	Leach, et al.	
		2009/0131776	05-21-2009	Simpson, et al.	
		2009/0131777	05-21-2009	Simpson, et al.	
		2009/0131860	05-21-2009	Nielsen	
		2009/0137886	05-28-2009	Shariati, et al.	
		2009/0137887	05-28-2009	Shariati, et al.	
		2009/0143659	06-04-2009	Li, et al.	
		2009/0156924	06-18-2009	Shariati, et al.	
		2009/0163791	06-25-2009	Brister, et al.	
		2009/0178459	07-16-2009	Li, et al.	
		2009/0182217	07-16-2009	Li, et al.	
		2009/0192366	07-30-2009	Mensinger, et al.	
		2009/0192380	07-30-2009	Shariati, et al.	
		2009/0192722	07-30-2009	Shariati, et al.	
		2009/0192724	07-30-2009	Brauker, et al.	
		2009/0192745	07-30-2009	Karnath, et al.	
		2009/0192751	07-30-2009	Karnath, et al.	
		2009/0216100	08-27-2009	Ebner, et al.	
		2009/0216103	08-27-2009	Brister, et al.	
		2009/0240120	09-24-2009	Mensinger, et al.	
		2009/0240128	09-24-2009	Mensinger, et al.	
		2009/0240193	09-24-2009	Mensinger, et al.	
		2009/0242399	10-01-2009	Karnath, et al.	
		2009/0242425	10-01-2009	Karnath, et al.	
		2009/0247855	10-01-2009	Boock, et al.	
		2009/0247856	10-01-2009	Boock, et al.	
		2009/0298182	12-03-2009	Schulat, et al.	
		2009/0299155	12-03-2009	Yang, et al.	
		2009/0299156	12-03-2009	Simpson, et al.	
		2009/0299162	12-03-2009	Brauker, et al.	
		2009/0299276	12-03-2009	Brauker, et al.	
		2010/0076283	03-25-2010	Simpson, et al.	
		2010/0093786	04-15-2010	Watanabe, et al.	
		2010/0096259	04-22-2010	Zhang, et al.	
		2010/0105999	04-29-2010	Dixon, et al.	
		2010/0113897	05-06-2010	Brenneman, et al.	
		2010/0141656	06-10-2010	Krieftewirth	
		2010/0146300	06-10-2010	Brown	

EXAMINER **DATE CONSIDERED**

Substitute Disclosure Statement Form (PTO-1449)
* EXAMINER: Initial if reference considered, whether or not citation is in conformance with MPEP 609. Draw line through citation if not in conformance and not considered. Include copy of this form with next communication to applicant.1 Applicant's unique citation designation number (optional) 2 Applicant is to place a check mark here if English language Translation is attached

Under the Paperwork Reduction Act of 1995, no persons are required to respond to a collection of information unless it contains a valid OMB control number.

Substitute for form 1449/PTO **INFORMATION DISCLOSURE STATEMENT BY APPLICANT** *(Use as many sheets as necessary)*				*Complete if Known*	
				Application Number	To be assigned
				Filing Date	March 4, 2016
				First Named Inventor	Wesley Scott Harper
				Art Unit	To be assigned
				Examiner Name	To be assigned
Sheet	16	of	21	Attorney Docket No: A0130.0090.C1C1	

US PATENT DOCUMENTS					
Examiner Initials*	Cite No.	Document Number Number-Kind Code	Publication Date MM-DD-YYYY	Name of Patentee or Applicant of Cited Document	Pages, Columns, Lines, Where Relevant Passages or Relevant Figures Appear
		2010/0152554	06-17-2010	Steine, et al.	
		2010/0160759	06-24-2010	Celentano, et al.	
		2010/0168538	07-01-2010	Keenan, et al.	
		2010/0168540	07-01-2010	Karnath, et al.	
		2010/0168541	07-01-2010	Karnath, et al.	
		2010/0168542	07-01-2010	Karnath, et al.	
		2010/0168543	07-01-2010	Karnath, et al.	
		2010/0168544	07-01-2010	Karnath, et al.	
		2010/0168545	07-01-2010	Karnath, et al.	
		2010/0168546	07-01-2010	Karnath, et al.	
		2010/0168657	07-01-2010	Karnath, et al.	
		2010/0174168	07-08-2010	Goode, Jr., et al.	
		2010/0174266	07-08-2010	Estes	
		2010/0179399	07-15-2010	Goode, Jr., et al.	
		2010/0179402	07-15-2010	Goode, Jr., et al.	
		2010/0179405	07-15-2010	Goode, Jr., et al.	
		2010/0179408	07-15-2010	Karnath, et al.	
		2010/0179409	07-15-2010	Karnath, et al.	
		2010/0185065	07-22-2010	Goode, Jr., et al.	
		2010/0185071	07-22-2010	Simpson, et al.	
		2010/0185072	07-22-2010	Goode, Jr., et al.	
		2010/0185073	07-22-2010	Goode, Jr., et al.	
		2010/0185074	07-22-2010	Goode, Jr., et al.	
		2010/0185075	07-22-2010	Brister, et al.	
		2010/0185175	07-22-2010	Kamen, et al.	
		2010/0198035	08-05-2010	Karnath, et al.	
		2010/0198142	08-05-2010	Sloan, et al.	
		2010/0213080	08-26-2010	Celentano, et al.	
		2010/0217105	08-26-2010	Yodfat, et al.	
		2010/0262201	10-14-2010	He, et al.	
		2010/0313105	12-09-2010	Nekoomaram, et al.	
		2010/0331642	12-30-2010	Bruce, et al.	
		2011/0024043	02-03-2011	Boock, et al.	
		2011/0024307	02-03-2011	Simpson, et al.	
		2011/0027127	02-03-2011	Simpson, et al.	
		2011/0027453	02-03-2011	Boock, et al.	
		2011/0027458	02-03-2011	Boock, et al.	
		2011/0028815	02-03-2011	Simpson, et al.	
		2011/0028816	02-03-2011	Simpson, et al.	

EXAMINER **DATE CONSIDERED**

Substitute Disclosure Statement Form (PTO-1449)
* EXAMINER: Initial if reference considered, whether or not citation is in conformance with MPEP 609. Draw line through citation if not in conformance and not considered. Include copy of this form with next communication to applicant.1 Applicant's unique citation designation number (optional) 2 Applicant is to place a check mark here if English language Translation is attached

Under the Paperwork Reduction Act of 1995, no persons are required to respond to a collection of information unless it contains a valid OMB control number.

Substitute for form 1449/PTO **INFORMATION DISCLOSURE STATEMENT BY APPLICANT** *(Use as many sheets as necessary)*	*Complete if Known*	
	Application Number	To be assigned
	Filing Date	March 4, 2016
	First Named Inventor	Wesley Scott Harper
	Art Unit	To be assigned
	Examiner Name	To be assigned
Sheet 17 of 21	Attorney Docket No: A0130.0090.C1C1	

US PATENT DOCUMENTS					
Examiner Initials*	Cite No.	Document Number Number-Kind Code	Publication Date MM-DD-YYYY	Name of Patentee or Applicant of Cited Document	Pages, Columns, Lines, Where Relevant Passages or Relevant Figures Appear
		2011/0031986	02-10-2011	Bhat, et al.	
		2011/0077490	03-31-2011	Simpson, et al.	
		2011/0148905	06-23-2011	Simmons, et al.	
		2011/0178461	07-21-2011	Chong, et al.	
		2011/0208027	08-25-2011	Wagner, et al.	
		2011/0257895	10-20-2011	Brauker, et al.	
		2011/0287528	11-24-2011	Fern, et al.	
		2011/0320130	12-29-2011	Valdes, et al.	
		2012/0078071	03-29-2012	Bohm, et al.	
		2012/0108934	05-03-2012	Valdes, et al.	
		2012/0165626	06-28-2012	Irina, et al.	
		2012/0165640	06-28-2012	Galley, et al.	
		2013/0035575	02-07-2013	Mayou, et al.	
		2013/0235166	09-12-2013	Jones, et al.	

FOREIGN PATENT DOCUMENTS						
Examiner Initials*	Cite No.	Foreign Patent Document Country Code-Number-Kind Code	Publication Date MM-DD-YYYY	Name of Patentee or Applicant of cited Document	Pages, Columns, Lines, Where Relevant Passages or RelevantFigures Appear	T[6]
		EP-0098592	01-18-1984	Fujisawa Pharmaceutical Co., Ltd.		
		EP-0127958	12-12-1984	Genetics International., Inc.		
		EP-0320109	06-14-1989	Medisense, Inc.		
		EP-0390390	10-03-1990	Associated Universities, Inc. et al.		
		EP-0396788	11-14-1990	PPG Heillige B.V.		
		WO-00/59370	10-12-2000	Cambridge University, Technical Services Limited		
		WO-01/52935	07-26-2001	Medical Research Group, Inc.		
		WO-01/54753	08-02-2001	Medical Research Group, Inc.		
		WO-03/82091	10-09-2003	Inverness Medical Limited		
		WO-2008/001366	01-03-2008	Endo-Rhythm Ltd.		

EXAMINER **DATE CONSIDERED**

Substitute Disclosure Statement Form (PTO-1449)
* EXAMINER: Initial if reference considered, whether or not citation is in conformance with MPEP 609. Draw line through citation if not in conformance and not considered. Include copy of this form with next communication to applicant.1 Applicant's unique citation designation number (optional) 2 Applicant is to place a check mark here if English language Translation is attached

Under the Paperwork Reduction Act of 1995, no persons are required to respond to a collection of information unless it contains a valid OMB control number.

Substitute for form 1449/PTO **INFORMATION DISCLOSURE STATEMENT BY APPLICANT** *(Use as many sheets as necessary)*				*Complete if Known*	
				Application Number	To be assigned
				Filing Date	March 4, 2016
				First Named Inventor	Wesley Scott Harper
				Art Unit	To be assigned
				Examiner Name	To be assigned
Sheet	18	of	21	Attorney Docket No: A0130.0090.C1C1	

NON PATENT LITERATURE DOCUMENTS			
Examiner Initials*	Cite No.	Include name of the author (in CAPITAL LETTERS), title of the article (when appropriate), title of the item (book, magazine, journal, serial, symposium, catalog, etc.), date, page(s), volume-issue number(s), publisher, city and/or country where published.	T[2]
		ARMOUR, J. C., et al., "Application of Chronic Intravascular Blood Glucose Sensor in Dogs", Diabetes, Vol. 39, 1990, pp. 1519-1526.	
		BENNION, N., et al., "Alternate Site Glucose Testing: A Crossover Design", Diabetes Technology & Therapeutics. Vol. 4, No. 1, 2002, pp. 25-33.	
		BLANK, T. B., et al., "CLINICAL RESULTS FROM A NON-INVASIVE BLOOD GLUCOSE MONITOR", Optical Diagnostics and Sensing of Biological Fluids and Glucose and Cholesterol Monitoring II, Proceedings of SPIE, Vol. 4624, 2002, pp. 1-10.	
		BROOKS, S. L., et al., "Development of an On-line Glucose Sensor for Fermentation Monitoring", Biosensors, Vol. 3, 1987, pp. 45-56.	
		CASS, A. E.G., et al., "Ferrocene-Medicated Enzyme Electrode for Amperometric Determination of Glucose", Analytical Chemistry, Vol. 56, No. 4, 1984, pp. 667-671.	
		CHEYNE, E.H., et al., "Performance of a Continuous Glucose Monitoring System During Controlled Hypoglycaemia in Healthy Volunteers", Diabetes Technology & Therapeutics, Vol. 4, No. 5, 2002, pp. 607-613.	
		CSOREGI, E., et al., "Design and Optimization of a Selective Subcutaneously Implantable Glucose Electrode Based on "Wired" Glucose Oxidase", Analytical Chemistry, Vol. 67, No. 7, 1995, pp. 1240-1244.	
		FELDMAN, B., et al., "A Continuous Glucose Sensor Based on Wired Enzyme™ Technology - Results from a 3-Day Trial in Patients with Type 1 Diabetes", Diabetes Technology & Therapeutics, Vol. 5 No. 5, 2003, pp. 769-779.	
		FELDMAN, B., et al., "Correlation of Glucose Concentrations in Interstitial Fluid and Venous Blood During Periods of Rapid Glucose Change", Abbott Diabetes Care, Inc. Freestyle Navigator Continuous Glucose Monitor Pamphlet, 2004.	
		ISERMANN, R., "SUPERVISION, FAULT-DETECTION AND FAULT-DIAGNOSIS METHODS - AN INTRODUCTION", Control Engineering Practice, Vol. 5, No. 5, 1997, pp. 639-652.	
		ISERMANN, R., et al., "TRENDS IN THE APPLICATION OF MODEL-BASED FAULT DETECTION AND DIAGNOSIS OF TECHNICAL PROCESSES", Control Engineering Practice, Vol. 5, No. 5, 1997, pp. 709-719.	
		JOHNSON, P. C., "Peripheral Circulation", John Wiley & Sons, 1978, p. 198.	
		JOVANOVIC, L., "The Role of Continuous Glucose Monitoring in Gestational Diabetes Mellitus", Diabetes Technology & Therapeutics, Vol. 2, Suppl. 1, 2000, pp. S67-S71.	
		JUNGHEIM, K., et al., "HOW RAPID DOES GLUCOSE CONCENTRATION CHANGE IN DAILY LIFE OF PATIENTS WITH TYPE 1 DIABETES?", Diabetologia, Vol. 45, 2002, pp. 250.	
		JUNGHEIM, K., et al., "Risky Delay of Hypoglycemia Detection by Glucose Monitoring at the Arm", Diabetes Care, Vol. 24, No. 7, 2001, pp. 1303-1304.	

EXAMINER **DATE CONSIDERED**

Substitute Disclosure Statement Form (PTO-1449)
* EXAMINER: Initial if reference considered, whether or not citation is in conformance with MPEP 609. Draw line through citation if not in conformance and not considered. Include copy of this form with next communication to applicant.1 Applicant's unique citation designation number (optional) 2 Applicant is to place a check mark here if English language Translation is attached

Under the Paperwork Reduction Act of 1995, no persons are required to respond to a collection of information unless it contains a valid OMB control number.

Substitute for form 1449/PTO **INFORMATION DISCLOSURE STATEMENT BY APPLICANT** *(Use as many sheets as necessary)*				*Complete if Known*	
				Application Number	To be assigned
				Filing Date	March 4, 2016
				First Named Inventor	Wesley Scott Harper
				Art Unit	To be assigned
				Examiner Name	To be assigned
Sheet	19	of	21	Attorney Docket No: A0130.0090.C1C1	

NON PATENT LITERATURE DOCUMENTS			
Examiner Initials*	Cite No.	Include name of the author (in CAPITAL LETTERS), title of the article (when appropriate), title of the item (book, magazine, journal, serial, symposium, catalog, etc.), date, page(s), volume-issue number(s), publisher, city and/or country where published.	T[2]
		KAPLAN, S. M., "WILEY ELECTRICAL AND ELECTRONICS ENGINEERING DICTIONARY", IEEE Press, 2004, pp. 141, 142, 548, 549.	
		LODWIG, V., et al., "Continuous Glucose Monitoring with Glucose Sensors: Calibration and Assessment Criteria", Diabetes Technology & Therapeutics, Vol. 5, No. 4, 2003, pp. 573-587.	
		LORTZ, J., et al., "What is Bluetooth? We Explain The Newest Short-Range Connectivity Technology", Smart Computing Learning Series, Wireless Computing, Vol. 8, Issue 5, 2002, pp. 72-74.	
		MALIN, S. F., et al., "Noninvasive Prediction of Glucose by Near-Infrared Diffuse Reflectance Spectroscopy", Clinical Chemistry, Vol. 45, No. 9, 1999, pp. 1651-1658.	
		MCGARRAUGH, G., et al., "Glucose Measurements Using Blood Extracted from the Forearm and the Finger", TheraSense, Inc., 2001, 16 Pages.	
		MCGARRAUGH, G., et al., "Physiological Influences on Off-Finger Glucose Testing", Diabetes Technology & Therapeutics, Vol. 3, No. 3, 2001, pp. 367-376.	
		MCKEAN, B. D., et al., "A Telemetry-Instrumentation System for Chronically Implanted Glucose and Oxygen Sensors", IEEE Transactions on Biomedical Engineering, Vol. 35, No. 7, 1988, pp. 526-532.	
		MORBIDUCCI, U., et al., "Improved usability of the minimal model of insulin sensitivity based on an automated approach and genetic algorithms for parameter estimation", Clinical Science, Vol. 112, 2007, pp. 257-263.	
		MOUGIAKAKOU, S. G., et al., "A Real Time Simulation Model of Glucose-Insulin Metabolism for Type 1 Diabetes Patients", Proceedings of the 2005 IEEE Engineering in Medicine and Biology 27th Annual Conference, 2005, pp. 298-301.	
		PARKER, R., et al., "Robust H_∞ Glucose Control in Diabetes Using a Physiological Model", AIChE Journal, Vol. 46, No. 12, 2000, pp. 2537-2549.	
		PICKUP, J. C., et al., "Implantable Glucose Sensors: Choosing the Appropriate Sensing Strategy", Biosensors, Vol. 3, 1987/88, pp. 335-346.	
		PICKUP, J. C., et al., "In vivo molecular sensing in diabetes mellitus: an implantable glucose sensor with direct electron transfer", Diabetologia, Vol. 32, 1989, pp. 213-217.	
		PISHKO, M. V., et al., "Amperometric Glucose Microelectrodes Prepared through Immobilization of Glucose Oxidase in Redox Hydrogels", Analytical Chemistry, Vol. 63, No. 20, 1991, pp. 2268-2272.	
		QUINN, C. P., et al., "Kinetics of glucose delivery to subcutaneous tissue in rats measured with 0.3-mm amperometric microsensors", American Journal of Physiology, Vol. 269, No. 1, 1995, E155- E161.	
		ROE, J. N., et al., "Bloodless Glucose Measurements", Critical Reviews™ in Therapeutic Drug Carrier Systems, Vol. 15, Issue 3, 1998, pp. 199-241.	

EXAMINER **DATE CONSIDERED**

Substitute Disclosure Statement Form (PTO-1449)
* EXAMINER: Initial if reference considered, whether or not citation is in conformance with MPEP 609. Draw line through citation if not in conformance and not considered. Include copy of this form with next communication to applicant. 1 Applicant's unique citation designation number (optional) 2 Applicant is to place a check mark here if English language Translation is attached

Under the Paperwork Reduction Act of 1995, no persons are required to respond to a collection of information unless it contains a valid OMB control number.

Substitute for form 1449/PTO **INFORMATION DISCLOSURE STATEMENT BY APPLICANT** *(Use as many sheets as necessary)*				*Complete if Known*	
				Application Number	To be assigned
				Filing Date	March 4, 2016
				First Named Inventor	Wesley Scott Harper
				Art Unit	To be assigned
				Examiner Name	To be assigned
Sheet	20	of	21	Attorney Docket No: A0130.0090.C1C1	

NON PATENT LITERATURE DOCUMENTS			
Examiner Initials*	Cite No.	Include name of the author (in CAPITAL LETTERS), title of the article (when appropriate), title of the item (book, magazine, journal, serial, symposium, catalog, etc.), date, page(s), volume-issue number(s), publisher, city and/or country where published.	T[2]
		SAKAKIDA, M., et al., "Development of ferrocene-mediated needle-type glucose sensor as a measure of true subcutaneous tissue glucose concentrations", Artificial Organs Today, Vol. 2, No. 2, 1992, pp. 145-158.	
		SAKAKIDA, M., et al., "Ferrocene-mediated needle-type glucose sensor covered with newly designed biocompatible membrane", Sensors and Actuators B, Vol. 13-14, 1993, pp. 319-322.	
		SALEHI, C., et al., "A TELEMETRY-INSTRUMENTATION SYSTEM FOR LONG-TERM IMPLANTABLE GLUCOSE AND OXYGEN SENSORS", Analytical Letters, Vol. 29, No. 13, 1996, pp. 2289-2308.	
		SCHMIDTKE, D. W., et al., "Measurement and modeling of the transient difference between blood and subcutaneous glucose concentrations in the rat after injection of insulin", Proceedings of the National Academy of Sciences, Vol. 95, 1998, pp. 294-299.	
		SHAW, G. W., et al., "*In Vitro* testing of a simply constructed, highly stable glucose sensor suitable for implantation in diabetic patients", Biosensors & Bioelectronics, Vol. 6, 1991, pp. 401-406.	
		SHICHIRI, M., et al., "Glycaemic Control in Pancreatectomized Dogs with a Wearable Artificial Endocrine Pancreas", Diabetologia, Vol. 24, 1983, pp. 179-184.	
		SHICHIRI, M., et al., "In Vivo Characteristics of Needle-Type Glucose Sensor - Measurements of Subcutaneous Glucose Concentrations in Human Volunteers", Hormone and Metabolic Research Supplement Series, Vol. 20, 1988, pp. 17-20.	
		SHICHIRI, M., et al., "Membrane design for extending the long-life of an implantable glucose sensor", Diabetes Nutrition and Metabolism, Vol. 2, 1989, pp. 309-313.	
		SHICHIRI, M., et al., "Needle-type Glucose Sensor for Wearable Artificial Endocrine Pancreas", Implantable Sensors for Closed-Loop Prosthetic Systems, Chapter 15, 1985, pp. 197-210.	
		SHICHIRI, M., et al., "Telemetry Glucose Monitoring Device With Needle-Type Glucose Sensor: A Useful Tool for Blood Glucose Monitoring in Diabetic Individuals", Diabetes Care, Vol. 9, No. 3, 1986, pp. 298-301.	
		SHICHIRI, M., et al., "WEARABLE ARTIFICIAL ENDOCRINE PANCREAS WITH NEEDLE-TYPE GLUCOSE SENSOR", The Lancet, 1982, pp. 1129-1131.	
		SHULTS, M. C., et al., "A Telemetry-Instrumentation System for Monitoring Multiple Subcutaneously Implanted Glucose Sensors", IEEE Transactions on Biomedical Engineering, Vol. 41, No. 10, 1994, pp. 937-942.	
		STERNBERG, R., et al., "Study and Development of Multilayer Needle-type Enzyme-based Glucose Microsensors", Biosensors, Vol. 4, 1988, pp. 27-40.	
		THOMPSON, M., et al., "*In Vivo* Probes: Problems and Perspectives", Clinical Biochemistry, Vol. 19, 1986, pp. 255-261.	

EXAMINER **DATE CONSIDERED**

Substitute Disclosure Statement Form (PTO-1449)
* EXAMINER: Initial if reference considered, whether or not citation is in conformance with MPEP 609. Draw line through citation if not in conformance and not considered. Include copy of this form with next communication to applicant. 1 Applicant's unique citation designation number (optional) 2 Applicant is to place a check mark here if English language Translation is attached

Under the Paperwork Reduction Act of 1995, no persons are required to respond to a collection of information unless it contains a valid OMB control number.

Substitute for form 1449/PTO **INFORMATION DISCLOSURE STATEMENT BY APPLICANT** *(Use as many sheets as necessary)*				*Complete if Known*	
				Application Number	To be assigned
				Filing Date	March 4, 2016
				First Named Inventor	Wesley Scott Harper
				Art Unit	To be assigned
				Examiner Name	To be assigned
Sheet	21	of	21	Attorney Docket No: A0130.0090.C1C1	

NON PATENT LITERATURE DOCUMENTS			
Examiner Initials*	Cite No.	Include name of the author (in CAPITAL LETTERS), title of the article (when appropriate), title of the item (book, magazine, journal, serial, symposium, catalog, etc.), date, page(s), volume-issue number(s), publisher, city and/or country where published.	T[2]
		TURNER, A.P.F., et al., "Diabetes Mellitus: Biosensors for Research and Management", Biosensors, Vol. 1, 1985, pp. 85-115.	
		UPDIKE, S. J., et al., "Principles of Long-term Fully Implanted Sensors with Emphasis on Radiotelemetric Monitoring of Blood Glucose from inside a Subcutaneous Foreign Body Capsule (FBC)", Biosensors in the Body: Continuous In vivo Monitoring, Chapter 4, 1997, pp. 117-137.	
		VELHO, G., et al., "Strategies for calibrating a subcutaneous glucose sensor", Biomedica Biochimica Acta, Vol. 48, 1989, pp. 957-964.	
		WILSON, G. S., et al., "Progress toward the Development of an Implantable Sensor for Glucose", Clinical Chemistry, Vol. 38, No. 9, 1992, pp. 1613-1617.	

EXAMINER **DATE CONSIDERED**

Substitute Disclosure Statement Form (PTO-1449)
* EXAMINER: Initial if reference considered, whether or not citation is in conformance with MPEP 609. Draw line through citation if not in conformance and not considered. Include copy of this form with next communication to applicant.1 Applicant's unique citation designation number (optional) 2 Applicant is to place a check mark here if English language Translation is attached

Under the Paperwork Reduction Act of 1995, no persons are required to respond to a collection of information unless it contains a valid OMB control number.

Application Data Sheet 37 CFR 1.76	Attorney Docket Number	A0130.0090.C1C1
	Application Number	
Title of Invention	METHODS AND SYSTEMS FOR EARLY SIGNAL ATTENUATION DETECTION AND PROCESSING	

The application data sheet is part of the provisional or nonprovisional application for which it is being submitted. The following form contains the bibliographic data arranged in a format specified by the United States Patent and Trademark Office as outlined in 37 CFR 1.76.
This document may be completed electronically and submitted to the Office in electronic format using the Electronic Filing System (EFS) or the document may be printed and included in a paper filed application.

Secrecy Order 37 CFR 5.2

☐ Portions or all of the application associated with this Application Data Sheet may fall under a Secrecy Order pursuant to 37 CFR 5.2 (Paper filers only. Applications that fall under Secrecy Order may not be filed electronically.)

Inventor Information:

Inventor 1 Remove

Legal Name

Prefix	Given Name	Middle Name	Family Name	Suffix
	Wesley	Scott	Harper	

Residence Information (Select One) ● US Residency Non US Residency Active US Military Service

City	Alameda	State/Province	CA	Country of Residence i	US

Mailing Address of Inventor:

Address 1	15 Ferro Court		
Address 2			
City	Alameda	**State/Province**	CA
Postal Code	94502	**Country** i	US

All Inventors Must Be Listed - Additional Inventor Information blocks may be generated within this form by selecting the **Add** button. Add

Correspondence Information:

Enter either Customer Number or complete the Correspondence Information section below.
For further information see 37 CFR 1.33(a).

☐ **An Address is being provided for the correspondence Information of this application.**

Customer Number	95508		
Email Address		Add Email	Remove Email

Application Information:

Title of the Invention	METHODS AND SYSTEMS FOR EARLY SIGNAL ATTENUATION DETECTION AND PROCESSING		
Attorney Docket Number	A0130.0090.C1C1	**Small Entity Status Claimed**	☐
Application Type	Nonprovisional		
Subject Matter	Utility		
Total Number of Drawing Sheets (if any)	7	**Suggested Figure for Publication (if any)**	

Under the Paperwork Reduction Act of 1995, no persons are required to respond to a collection of information unless it contains a valid OMB control number.

Application Data Sheet 37 CFR 1.76	Attorney Docket Number	A0130.0090.C1C1
	Application Number	
Title of Invention	METHODS AND SYSTEMS FOR EARLY SIGNAL ATTENUATION DETECTION AND PROCESSING	

Publication Information:

☐ Request Early Publication (Fee required at time of Request 37 CFR 1.219)

☐ **Request Not to Publish.** I hereby request that the attached application not be published under 35 U.S.C. 122(b) and certify that the invention disclosed in the attached application **has not and will not** be the subject of an application filed in another country, or under a multilateral international agreement, that requires publication at eighteen months after filing.

Representative Information:

Representative information should be provided for all practitioners having a power of attorney in the application. Providing this information in the Application Data Sheet does not constitute a power of attorney in the application (see 37 CFR 1.32).
Either enter Customer Number or complete the Representative Name section below. If both sections are completed the customer Number will be used for the Representative Information during processing.

Please Select One:	● Customer Number	US Patent Practitioner	○ Limited Recognition (37 CFR 11.9)
Customer Number	95508		

Domestic Benefit/National Stage Information:

This section allows for the applicant to either claim benefit under 35 U.S.C. 119(e), 120, 121, or 365(c) or indicate National Stage entry from a PCT application. Providing this information in the application data sheet constitutes the specific reference required by 35 U.S.C. 119(e) or 120, and 37 CFR 1.78.

Prior Application Status	Pending		Remove
Application Number	Continuity Type	Prior Application Number	Filing Date (YYYY-MM-DD)
	Continuation of	13925694	2013-06-24

Prior Application Status	Patented				Remove
Application Number	Continuity Type	Prior Application Number	Filing Date (YYYY-MM-DD)	Patent Number	Issue Date (YYYY-MM-DD)
13925694	Continuation of	12769635	2010-04-28	8483967	2013-07-09

Prior Application Status	Expired		Remove
Application Number	Continuity Type	Prior Application Number	Filing Date (YYYY-MM-DD)
12769635	non provisional of	61173600	2009-04-29

Additional Domestic Benefit/National Stage Data may be generated within this form by selecting the **Add** button. Add

Foreign Priority Information:

Application Data Sheet 37 CFR 1.76	Attorney Docket Number	A0130.0090.C1C1
	Application Number	
Title of Invention	METHODS AND SYSTEMS FOR EARLY SIGNAL ATTENUATION DETECTION AND PROCESSING	

This section allows for the applicant to claim priority to a foreign application. Providing this information in the application data sheet constitutes the claim for priority as required by 35 U.S.C. 119(b) and 37 CFR 1.55(d). When priority is claimed to a foreign application that is eligible for retrieval under the priority document exchange program (PDX)[i] the information will be used by the Office to automatically attempt retrieval pursuant to 37 CFR 1.55(h)(1) and (2). Under the PDX program, applicant bears the ultimate responsibility for ensuring that a copy of the foreign application is received by the Office from the participating foreign intellectual property office, or a certified copy of the foreign priority application is filed, within the time period specified in 37 CFR 1.55(g)(1).

Remove

Application Number	Country[i]	Filing Date (YYYY-MM-DD)	Access Code[i] (if applicable)

Additional Foreign Priority Data may be generated within this form by selecting the **Add** button. Add

Statement under 37 CFR 1.55 or 1.78 for AIA (First Inventor to File) Transition Applications

This application (1) claims priority to or the benefit of an application filed before March 16, 2013 and (2) also contains, or contained at any time, a claim to a claimed invention that has an effective filing date on or after March 16, 2013.

Authorization to Permit Access:

Authorization to Permit Access to the Instant Application by the Participating Offices

If checked, the undersigned hereby grants the USPTO authority to provide the European Patent Office (EPO), the Japan Patent Office (JPO), the Korean Intellectual Property Office (KIPO), the World Intellectual Property Office (WIPO), and any other intellectual property offices in which a foreign application claiming priority to the instant patent application is filed access to the instant patent application. See 37 CFR 1.14(c) and (h). This box should not be checked if the applicant does not wish the EPO, JPO, KIPO, WIPO, or other intellectual property office in which a foreign application claiming priority to the instant patent application is filed to have access to the instant patent application.

In accordance with 37 CFR 1.14(h)(3), access will be provided to a copy of the instant patent application with respect to: 1) the instant patent application-as-filed; 2) any foreign application to which the instant patent application claims priority under 35 U.S.C. 119(a)-(d) if a copy of the foreign application that satisfies the certified copy requirement of 37 CFR 1.55 has been filed in the instant patent application; and 3) any U.S. application-as-filed from which benefit is sought in the instant patent application.

In accordance with 37 CFR 1.14(c), access may be provided to information concerning the date o f filing this Authorization.

Under the Paperwork Reduction Act of 1995, no persons are required to respond to a collection of information unless it contains a valid OMB control number.

Application Data Sheet 37 CFR 1.76	Attorney Docket Number	A0130.0090.C1C1
	Application Number	
Title of Invention	METHODS AND SYSTEMS FOR EARLY SIGNAL ATTENUATION DETECTION AND PROCESSING	

Applicant Information:

Providing assignment information in this section does not substitute for compliance with any requirement of part 3 of Title 37 of CFR to have an assignment recorded by the Office.

Applicant 1 Remove

If the applicant is the inventor (or the remaining joint inventor or inventors under 37 CFR 1.45), this section should not be completed. The information to be provided in this section is the name and address of the legal representative who is the applicant under 37 CFR 1.43; or the name and address of the assignee, person to whom the inventor is under an obligation to assign the invention, or person who otherwise shows sufficient proprietary interest in the matter who is the applicant under 37 CFR 1.46. If the applicant is an applicant under 37 CFR 1.46 (assignee, person to whom the inventor is obligated to assign, or person who otherwise shows sufficient proprietary interest) together with one or more joint inventors, then the joint inventor or inventors who are also the applicant should be identified in this section. Clear

● Assignee	Legal Representative under 35 U.S.C. 117	Joint Inventor
Person to whom the inventor is obligated to assign.	Person who shows sufficient proprietary interest	

If applicant is the legal representative, indicate the authority to file the patent application, the inventor is:

Name of the Deceased or Legally Incapacitated Inventor :

If the Applicant is an Organization check here. ☒

Organization Name	ABBOTT DIABETES CARE INC.		
Mailing Address Information For Applicant:			
Address 1	1420 Harbor Bay Parkway		
Address 2			
City	Alameda	**State/Province**	CA
Country	US	Postal Code	94502
Phone Number		Fax Number	
Email Address			

Additional Applicant Data may be generated within this form by selecting the Add button. Add

Non-Applicant Assignee Information:

Providing assignment information in this section does not subsitute for compliance with any requirement of part 3 of Title 37 of CFR to have an assignment recorded by the Office.

Under the Paperwork Reduction Act of 1995, no persons are required to respond to a collection of information unless it contains a valid OMB control number.

Application Data Sheet 37 CFR 1.76	Attorney Docket Number	A0130.0090.C1C1
	Application Number	
Title of Invention	METHODS AND SYSTEMS FOR EARLY SIGNAL ATTENUATION DETECTION AND PROCESSING	

Assignee 1

Complete this section only if non-applicant assignee information is desired to be included on the patent application publication in accordance with 37 CFR 1.215(b). Do not include in this section an applicant under 37 CFR 1.46 (assignee, person to whom the inventor is obligated to assign, or person who otherwise shows sufficient proprietary interest), as the patent application publication will include the name of the applicant(s).

Remove

If the Assignee is an Organization check here. ☐

Prefix	**Given Name**	Middle Name	**Family Name**	Suffix

Mailing Address Information For Non-Applicant Assignee:

Address 1			
Address 2			
City		**State/Province**	
Country i		Postal Code	
Phone Number		Fax Number	
Email Address			

Additional Assignee Data may be generated within this form by selecting the Add button. Add

Signature:

Remove

NOTE: This form must be signed in accordance with 37 CFR 1.33. See 37 CFR 1.4 for signature requirements and certifications.

Signature	/Mark Stirrat/			Date (YYYY-MM-DD)	2016-03-04
First Name	Mark	Last Name	Stirrat	Registration Number	50756

Additional Signature may be generated within this form by selecting the Add button. Add

This collection of information is required by 37 CFR 1.76. The information is required to obtain or retain a benefit by the public which is to file (and by the USPTO to process) an application. Confidentiality is governed by 35 U.S.C. 122 and 37 CFR 1.14. This collection is estimated to take 23 minutes to complete, including gathering, preparing, and submitting the completed application data sheet form to the USPTO. Time will vary depending upon the individual case. Any comments on the amount of time you require to complete this form and/or suggestions for reducing this burden, should be sent to the Chief Information Officer, U.S. Patent and Trademark Office, U.S. Department of Commerce, P.O. Box 1450, Alexandria, VA 22313-1450. DO NOT SEND FEES OR COMPLETED FORMS TO THIS ADDRESS. **SEND TO: Commissioner for Patents, P.O. Box 1450, Alexandria, VA 22313-1450.**

Privacy Act Statement

The Privacy Act of 1974 (P.L. 93-579) requires that you be given certain information in connection with your submission of the attached form related to a patent application or patent. Accordingly, pursuant to the requirements of the Act, please be advised that: (1) the general authority for the collection of this information is 35 U.S.C. 2(b)(2); (2) furnishing of the information solicited is voluntary; and (3) the principal purpose for which the information is used by the U.S. Patent and Trademark Office is to process and/or examine your submission related to a patent application or patent. If you do not furnish the requested information, the U.S. Patent and Trademark Office may not be able to process and/or examine your submission, which may result in termination of proceedings or abandonment of the application or expiration of the patent.

The information provided by you in this form will be subject to the following routine uses:

1. The information on this form will be treated confidentially to the extent allowed under the Freedom of Information Act (5 U.S.C. 552) and the Privacy Act (5 U.S.C. 552a). Records from this system of records may be disclosed to the Department of Justice to determine whether the Freedom of Information Act requires disclosure of these records.

2. A record from this system of records may be disclosed, as a routine use, in the course of presenting evidence to a court, magistrate, or administrative tribunal, including disclosures to opposing counsel in the course of settlement negotiations.

3. A record in this system of records may be disclosed, as a routine use, to a Member of Congress submitting a request involving an individual, to whom the record pertains, when the individual has requested assistance from the Member with respect to the subject matter of the record.

4. A record in this system of records may be disclosed, as a routine use, to a contractor of the Agency having need for the information in order to perform a contract. Recipients of information shall be required to comply with the requirements of the Privacy Act of 1974, as amended, pursuant to 5 U.S.C. 552a(m).

5. A record related to an International Application filed under the Patent Cooperation Treaty in this system of records may be disclosed, as a routine use, to the International Bureau of the World Intellectual Property Organization, pursuant to the Patent Co o p eration Treaty.

6. A record in this system of records may be disclosed, as a routine use, to another federal agency for purposes of National Security review (35 U.S.C. 181) and for review pursuant to the Atomic Energy Act (42 U.S.C. 218(c)).

7. A record from this system of records may be disclosed, as a routine use, to the Administrator, General Services, or his/her designee, during an inspection of records conducted by GSA as part of that agency's responsibility to recommend improvements in records management practices and programs, under authority of 44 U.S.C. 2904 and 2906. Such disclosure shall be made in accordance with the GSA regulations governing inspection of records for this purpose, and any other relevant (i.e., GSA or Commerce) directive. Such disclosure shall not be used to make determinations about individuals.

8. A record from this system of records may be disclosed, as a routine use, to the public after either publication of the application pursuant to 35 U.S.C. 122(b) or issuance of a patent pursuant to 35 U.S.C. 151. Further, a record may be disclosed, subject to the limitations of 37 CFR 1.14, as a routine use, to the public if the record was filed in an application which became abandoned or in which the proceedings were terminated and which application is referenced by either a published application, an application open to public inspections or an issued patent.

9. A record from this system of records may be disclosed, as a routine use, to a Federal, State, or local law enforcement agency, if the USPTO becomes aware of a violation or potential violation of law or regulation.

METHODS AND SYSTEMS FOR EARLY SIGNAL ATTENUATION DETECTION AND PROCESSING

RELATED APPLICATIONS

[0001] The present application is a continuation of U.S. Patent Application No. 13/925,694, filed June 24, 2013, which is a continuation of U.S. Patent Application No. 12/769,635, filed April 28, 2010, now U.S. Patent No. 8,483,967, which claims the benefit of U.S. Provisional Patent Application No. 61/173,600, filed April 29, 2009, the disclosures of all of which are incorporated herein by reference in their entireties for all purposes.

BACKGROUND

[0002] Analyte, e.g., glucose monitoring systems including continuous and discrete monitoring systems generally include a small, lightweight battery powered and microprocessor controlled system which is configured to detect signals proportional to the corresponding measured glucose levels using an electrometer. RF signals may be used to transmit the collected data. One aspect of certain analyte monitoring systems include a transcutaneous or subcutaneous analyte sensor configuration which is, for example, at least partially positioned through the skin layer of a subject whose analyte level is to be monitored. The sensor may use a two or three-electrode (work, reference and counter electrodes) configuration driven by a controlled potential (potentiostat) analog circuit connected through a contact system.

[0003] An analyte sensor may be configured so that a portion thereof is placed under the skin of the patient so as to contact analyte of the patient, and another portion or segment of the analyte sensor may be in communication with the transmitter unit. The transmitter unit may be configured to transmit the analyte levels detected by the sensor over a wireless communication link such as an RF (radio frequency) communication link to a receiver/monitor unit. The receiver/monitor unit may perform data analysis, among other functions, on the received analyte levels to generate information pertaining to the monitored analyte levels.

SUMMARY

[0004] Devices and methods for analyte monitoring, e.g., glucose monitoring, and/or therapy management system including, for example, medication infusion device are provided.

Embodiments include transmitting information from a first location to a second, e.g., using a telemetry system such as RF telemetry. Systems herein include continuous analyte monitoring systems, discrete analyte monitoring system, and therapy management systems.

[0005] Embodiments include receiving sensor data from an analyte sensor of a sensor monitoring system, processing the received sensor data with time corresponding calibration data, outputting the processed sensor data, detecting one or more adverse conditions associated with the sensor monitoring system, disabling the output of the sensor data during a adverse condition time period, determining that the one or more detected adverse conditions is no longer present in the sensor monitoring system, retrieving the sensor data during the adverse condition time period, processing the retrieved sensor data during the adverse condition time period, and outputting the processed retrieved sensor data.

[0006] Embodiments include detecting a condition unsuitable for calibration of an analyte sensor for a predetermined time period, disabling output of information associated with the analyte sensor, determining a successful calibration of the analyte sensor, retrieving one or more parameters associated with the successful calibration, processing sensor data during the time period of disabled output of information with the one or more parameters associated with the successful calibration, and displaying the processed sensor data for the time period of disabled information output.

[0007] Embodiments include an interface configured to receive sensor data, a first memory configured to store the received sensor data, a processor coupled to the memory and configured to process the stored sensor data, a second memory coupled to the processor and configured to store the processed sensor data, and a display unit coupled to the second memory and configured to display the processed sensor data, where the processor is further configured to detect a condition unsuitable for calibration of a sensor for a predetermined time period, disable display of processed sensor data, determine a successful calibration of the sensor, retrieve one or more parameters associated with the successful calibration, process the sensor data during the time period of disabled display of sensor data with the one or more parameters associated with the successful calibration, and display the processed sensor data for the time period of disabled information output.

[0008] These and other objects, features and advantages of the present disclosure will become more fully apparent from the following detailed description of the embodiments, the appended claims and the accompanying drawings.

INCORPORATION BY REFERENCE

[0009] The following patents, applications and/or publications are incorporated herein by reference for all purposes: U.S. Pat. Nos. 4,545,382; 4,711,245; 5,262,035; 5,262,305; 5,264,104; 5,320,715; 5,509,410; 5,543,326; 5,593,852; 5,601,435; 5,628,890; 5,820,551; 5,822,715; 5,899,855; 5,918,603; 6,071,391; 6,103,033; 6,120,676; 6,121,009; 6,134,461; 6,143,164; 6,144,837; 6,161,095; 6,175,752; 6,270,455; 6,284,478; 6,299,757; 6,338,790; 6,377,894; 6,461,496; 6,503,381; 6,514,460; 6,514,718; 6,540,891; 6,560,471; 6,579,690; 6,591,125; 6,592,745; 6,600,997; 6,605,200; 6,605,201; 6,616,819; 6,618,934; 6,650,471; 6,654,625; 6,676,816; 6,730,200; 6,736,957; 6,746,582; 6,749,740; 6,764,581; 6,773,671; 6,881,551; 6,893,545; 6,932,892; 6,932,894; 6,942,518; 7,167,818; and 7,299,082; U.S. Published Application Nos. 2004/0186365; 2005/0182306; 2007/0056858; 2007/0068807; 2007/0227911; 2007/0233013; 2008/0081977; 2008/0161666; and 2009/0054748; U.S. patent application Ser. Nos. 11/831,866; 11/831,881; 11/831,895; 12/102,839; 12/102,844; 12/102,847; 12/102,855; 12/102,856; 12/152,636; 12/152,648; 12/152,650; 12/152,652; 12/152,657; 12/152,662; 12/152,670; 12/152,673; 12/363,712; 12/131,012; 12/242,823; 12/363,712; 12/393,921; 12/495,709; 12/698,124; 12/699,653; 12/699,844; 12/714,439; 12/761,372; and 12/761,387 and U.S. Provisional Application Ser. Nos. 61/230,686 and 61/227,967.

BRIEF DESCRIPTION OF THE DRAWINGS

[0010] FIG. 1 illustrates a block diagram of a data monitoring and management system for practicing one or more embodiments of the present disclosure;

FIG. 2 is a block diagram of the transmitter unit of the data monitoring and management system shown in FIG. 1 in accordance with one embodiment of the present disclosure;

[0012] FIG. 3 is a block diagram of the receiver/monitor unit of the data monitoring and management system shown in FIG. 1 in accordance with one embodiment of the present disclosure;

[0013] FIG. 4 illustrates analyte sensor data processing in accordance with one embodiment of the present disclosure;

[0014] FIG. 5 illustrates analyte sensor data processing in accordance with one embodiment of the present disclosure;

[0015] FIG. 6 illustrates backfilling gaps in sensor data in one embodiment of the present disclosure; and

[0016] FIGS. 7A and 7B illustrate backfill of gaps of a period of uncalibrated sensor data in one embodiment.

DETAILED DESCRIPTION

[0017] Before the present disclosure is described in additional detail, it is to be understood that this disclosure is not limited to particular embodiments described, as such may, of course, vary. It is also to be understood that the terminology used herein is for the purpose of describing particular embodiments only, and is not intended to be limiting, since the scope of the present disclosure will be limited only by the appended claims.

[0018] Where a range of values is provided, it is understood that each intervening value, to the tenth of the unit of the lower limit unless the context clearly dictates otherwise, between the upper and lower limit of that range and any other stated or intervening value in that stated range, is encompassed within the disclosure. The upper and lower limits of these smaller ranges may independently be included in the smaller ranges is also encompassed within the disclosure, subject to any specifically excluded limit in the stated range. Where the stated range includes one or both of the limits, ranges excluding either or both of those included limits are also included in the disclosure.

[0019] Unless defined otherwise, all technical and scientific terms used herein have the same meaning as commonly understood by one of ordinary skill in the art to which this disclosure belongs. Although any methods and materials similar or equivalent to those described herein can also be used in the practice or testing of the present disclosure, the preferred methods and materials are now described. All publications mentioned herein are incorporated herein by reference to disclose and describe the methods and/or materials in connection with which the publications are cited.

[0020] It must be noted that as used herein and in the appended claims, the singular forms "a", "an", and "the" include plural referents unless the context clearly dictates otherwise.

[0021] The publications discussed herein are provided solely for their disclosure prior to the filing date of the present application. Nothing herein is to be construed as an admission that the present disclosure is not entitled to antedate such publication by virtue of prior disclosure. Further, the dates of publication provided may be different from the actual publication dates which may need to be independently confirmed.

[0022] As will be apparent to those of skill in the art upon reading this disclosure, each of the individual embodiments described and illustrated herein has discrete components and features which may be readily separated from or combined with the features of any of the other several embodiments without departing from the scope or spirit of the present disclosure.

[0023] The figures shown herein are not necessarily drawn to scale, with some components and features being exaggerated for clarity.

[0024] As described in further detail below, in accordance with the various embodiments of the present disclosure, there is provided a method and system for positioning a controller unit within a transmission range for close proximity communication, transmitting one or more predefined close proximity commands, and receiving a response packet in response to the transmitted one or more predefined close proximity commands. For example, in one aspect, close proximity communication includes short range wireless communication between communication components or devices, where the communication range is limited to about 10 inches or less, about 5 inches or less, or about 2 inches or less, or other suitable, short range or distance between the devices. The close proximity wireless communication in certain embodiments includes a bi-directional communication where a command sending communication device, when positioned within the short communication range or in close proximity to the command receiving communication device, is configured to transmit one or more commands to the command receiving communication device (for example, when a user activates or actuates a transmit command button or switch). In response, the command receiving communication device may be configured to perform one or more routines associated with the received command, and/or return or send back a response data packet or signal to the command sending communication device. Example of such functions and or commands may include, but not limited to activation of certain functions or routines such as analyte related data processing, and the like.

[0025] FIG. 1 illustrates a data monitoring and management system such as, for example, analyte (e.g., glucose) monitoring system 100 in accordance with one embodiment of the present

disclosure. The subject invention is further described primarily with respect to a glucose monitoring system for convenience and such description is in no way intended to limit the scope of the invention. It is to be understood that the analyte monitoring system may be configured to monitor a variety of analytes, e.g., lactate, and the like.

[0026] Analytes that may be monitored include, for example, acetyl choline, amylase, bilirubin, cholesterol, chorionic gonadotropin, creatine kinase (e.g., CK-MB), creatine, DNA, fructosamine, glucose, glutamine, growth hormones, hormones, ketones, lactate, peroxide, prostate-specific antigen, prothrombin, RNA, thyroid stimulating hormone, and troponin. The concentration of drugs, such as, for example, antibiotics (e.g., gentamicin, vancomycin, and the like), digitoxin, digoxin, drugs of abuse, theophylline, and warfarin, may also be monitored. More than one analyte may be monitored by a single system, e.g. a single analyte sensor.

[0027] The analyte monitoring system 100 includes a sensor unit 101, a data processing and transmitter unit 102 coupleable to the sensor unit 101, and a primary receiver unit 104 which is configured to communicate with the data processing and transmitter unit 102 via a bi-directional communication link 103. The primary receiver unit 104 may be further configured to transmit data to a data processing terminal 105 for evaluating the data received by the primary receiver unit 104. Moreover, the data processing terminal 105 in one embodiment may be configured to receive data directly from the data processing and transmitter unit 102 via a communication link which may optionally be configured for bi-directional communication. Accordingly, data processing and transmitter unit 102 and/or receiver unit 104 may include a transceiver.

[0028] Also shown in FIG. 1 is an optional secondary receiver unit 106 which is operatively coupled to the communication link and configured to receive data transmitted from the data processing and transmitter unit 102. Moreover, as shown in the Figure, the secondary receiver unit 106 is configured to communicate with the primary receiver unit 104 as well as the data processing terminal 105. Indeed, the secondary receiver unit 106 may be configured for bi-directional wireless communication with each or one of the primary receiver unit 104 and the data processing terminal 105. As discussed in further detail below, in one embodiment of the present disclosure, the secondary receiver unit 106 may be configured to include a limited number of functions and features as compared with the primary receiver unit 104. As such, the secondary receiver unit 106 may be configured substantially in a smaller compact housing or embodied in a device such as a wrist watch, pager, mobile phone, PDA, for example.

Alternatively, the secondary receiver unit 106 may be configured with the same or substantially similar functionality as the primary receiver unit 104. The receiver unit may be configured to be used in conjunction with a docking cradle unit, for example for one or more of the following or other functions: placement by bedside, for re-charging, for data management, for night time monitoring, and/or bi-directional communication device.

[0029] In one aspect sensor unit 101 may include two or more sensors, each configured to communicate with data processing and transmitter unit 102. Furthermore, while only one, data processing and transmitter unit 102, communication link 103, and data processing terminal 105 are shown in the embodiment of the analyte monitoring system 100 illustrated in FIG. 1. However, it will be appreciated by one of ordinary skill in the art that the analyte monitoring system 100 may include one or more sensors, multiple transmitter units 102, communication links 103, and data processing terminals 105. Moreover, within the scope of the present disclosure, the analyte monitoring system 100 may be a continuous monitoring system, or semi-continuous, or a discrete monitoring system. In a multi-component environment, each device is configured to be uniquely identified by each of the other devices in the system so that communication conflict is readily resolved between the various components within the analyte monitoring system 100.

[0030] In one embodiment of the present disclosure, the sensor unit 101 is physically positioned in or on the body of a user whose analyte level is being monitored. The sensor unit 101 may be configured to continuously sample the analyte level of the user and convert the sampled analyte level into a corresponding data signal for transmission by the data processing and transmitter unit 102. In certain embodiments, the data processing and transmitter unit 102 may be physically coupled to the sensor unit 101 so that both devices are integrated in a single housing and positioned on the user's body. The data processing and transmitter unit 102 may perform data processing such as filtering and encoding on data signals and/or other functions, each of which corresponds to a sampled analyte level of the user, and in any event data processing and transmitter unit 102 transmits analyte information to the primary receiver unit 104 via the communication link 103. Examples of such integrated sensor and transmitter units can be found in, among others, U.S. patent application Ser. No. 12/698,124, incorporated herein by reference.

[0031] In one embodiment, the analyte monitoring system 100 is configured as a one-way RF communication path from the data processing and transmitter unit 102 to the primary receiver

unit 104. In such embodiment, the data processing and transmitter unit 102 transmits the sampled data signals received from the sensor unit 101 without acknowledgement from the primary receiver unit 104 that the transmitted sampled data signals have been received. For example, the data processing and transmitter unit 102 may be configured to transmit the encoded sampled data signals at a fixed rate (e.g., at one minute intervals) after the completion of the initial power on procedure. Likewise, the primary receiver unit 104 may be configured to detect such transmitted encoded sampled data signals at predetermined time intervals. Alternatively, the analyte monitoring system 100 may be configured with a bi-directional RF (or otherwise) communication between the data processing and transmitter unit 102 and the primary receiver unit 104.

[0032] Additionally, in one aspect, the primary receiver unit 104 may include two sections. The first section is an analog interface section that is configured to communicate with the data processing and transmitter unit 102 via the communication link 103. In one embodiment, the analog interface section may include an RF receiver and an antenna for receiving and amplifying the data signals from the data processing and transmitter unit 102, which are thereafter, demodulated with a local oscillator and filtered through a band-pass filter. The second section of the primary receiver unit 104 is a data processing section which is configured to process the data signals received from the data processing and transmitter unit 102 such as by performing data decoding, error detection and correction, data clock generation, and data bit recovery.

[0033] In operation, upon completing the power-on procedure, the primary receiver unit 104 is configured to detect the presence of the data processing and transmitter unit 102 within its range based on, for example, the strength of the detected data signals received from the data processing and transmitter unit 102 and/or a predetermined transmitter identification information. Upon successful synchronization with the corresponding data processing and transmitter unit 102, the primary receiver unit 104 is configured to begin receiving from the data processing and transmitter unit 102 data signals corresponding to the user's detected analyte level. More specifically, the primary receiver unit 104 in one embodiment is configured to perform synchronized time hopping with the corresponding synchronized data processing and transmitter unit 102 via the communication link 103 to obtain the user's detected analyte level.

[0034] Referring again to FIG. 1, the data processing terminal 105 may include a personal computer, a portable computer such as a laptop or a handheld device (e.g., personal digital

assistants (PDAs)), and the like, each of which may be configured for data communication with the receiver via a wired or a wireless connection. Additionally, the data processing terminal 105 may further be connected to a data network (not shown) for storing, retrieving and updating data corresponding to the detected analyte level of the user.

[0035] Within the scope of the present disclosure, the data processing terminal 105 may include an infusion device such as an insulin infusion pump (external or implantable) or the like, which may be configured to administer insulin to patients, and which may be configured to communicate with the receiver unit 104 for receiving, among others, the measured analyte level. Alternatively, the receiver unit 104 may be configured to integrate or otherwise couple to an infusion device therein so that the receiver unit 104 is configured to administer insulin therapy to patients, for example, for administering and modifying basal profiles, as well as for determining appropriate boluses for administration based on, among others, the detected analyte levels received from the data processing and transmitter unit 102.

[0036] Additionally, the data processing and transmitter unit 102, the primary receiver unit 104 and the data processing terminal 105 may each be configured for bi-directional wireless communication such that each of the data processing and transmitter unit 102, the primary receiver unit 104 and the data processing terminal 105 may be configured to communicate (that is, transmit data to and receive data from) with each other via the wireless communication link 103. More specifically, the data processing terminal 105 may in one embodiment be configured to receive data directly from the data processing and transmitter unit 102 via the communication link 103, where the communication link 103, as described above, may be configured for bi-directional communication.

[0037] In this embodiment, the data processing terminal 105 which may include an insulin pump, may be configured to receive the analyte signals from the data processing and transmitter unit 102, and thus, incorporate the functions of the receiver 104 including data processing for managing the patient's insulin therapy and analyte monitoring. In one embodiment, the communication link 103 may include one or more of an RF communication protocol, an infrared communication protocol, a Bluetooth® enabled communication protocol, an 802.11x wireless communication protocol, or an equivalent wireless communication protocol which would allow secure, wireless communication of several units (for example, per HIPPA requirements) while avoiding potential data collision and interference.

[0038] FIG. 2 is a block diagram of the transmitter of the data monitoring and detection system shown in FIG. 1 in accordance with one embodiment of the present disclosure. Referring to the Figure, the data processing and transmitter unit 102 in one embodiment includes an analog interface 201 configured to communicate with the sensor unit 101 (FIG. 1), a user input 202, and a temperature measurement section 203, each of which is operatively coupled to a transmitter processor 204 such as a central processing unit (CPU). As can be seen from FIG. 2, there are provided four contacts, three of which are electrodes--work electrode (W) 210, guard contact (G) 211, reference electrode (R) 212, and counter electrode (C) 213, each operatively coupled to the analog interface 201 of the data processing and transmitter unit 102 for connection to the sensor unit 101 (FIG. 1). In one embodiment, each of the work electrode (W) 210, guard contact (G) 211, reference electrode (R) 212, and counter electrode (C) 213 may be made using a conductive material that is either printed or etched or ablated, for example, such as carbon which may be printed, or a metal such as a metal foil (e.g., gold) or the like, which may be etched or ablated or otherwise processed to provide one or more electrodes. Fewer or greater electrodes and/or contact may be provided in certain embodiments.

[0039] Further shown in FIG. 2 are a transmitter serial communication section 205 and an RF transmitter 206, each of which is also operatively coupled to the transmitter processor 204. Moreover, a power supply 207 such as a battery is also provided in the data processing and transmitter unit 102 to provide the necessary power for the data processing and transmitter unit 102. In certain embodiments, the power supply 207 also provides the power necessary to power the sensor 101. In other embodiments, the sensor is a self-powered sensor, such as the sensor described in U.S. patent application Ser. No. 12/393,921, incorporated herein by reference. Additionally, as can be seen from the Figure, clock 208 is provided to, among others, supply real time information to the transmitter processor 204.

[0040] In one embodiment, a unidirectional input path is established from the sensor unit 101 (FIG. 1) and/or manufacturing and testing equipment to the analog interface 201 of the data processing and transmitter unit 102, while a unidirectional output is established from the output of the RF transmitter 206 of the data processing and transmitter unit 102 for transmission to the primary receiver unit 104. In this manner, a data path is shown in FIG. 2 between the aforementioned unidirectional input and output via a dedicated link 209 from the analog interface 201 to serial communication section 205, thereafter to the processor 204, and then to

the RF transmitter 206. As such, in one embodiment, via the data path described above, the data processing and transmitter unit 102 is configured to transmit to the primary receiver unit 104 (FIG. 1), via the communication link 103 (FIG. 1), processed and encoded data signals received from the sensor unit 101 (FIG. 1). Additionally, the unidirectional communication data path between the analog interface 201 and the RF transmitter 206 discussed above allows for the configuration of the data processing and transmitter unit 102 for operation upon completion of the manufacturing process as well as for direct communication for diagnostic and testing purposes.

[0041] As discussed above, the transmitter processor 204 is configured to transmit control signals to the various sections of the data processing and transmitter unit 102 during the operation of the data processing and transmitter unit 102. In one embodiment, the transmitter processor 204 also includes a memory (not shown) for storing data such as the identification information for the data processing and transmitter unit 102, as well as the data signals received from the sensor unit 101. The stored information may be retrieved and processed for transmission to the primary receiver unit 104 under the control of the transmitter processor 204. Furthermore, the power supply 207 may include a commercially available battery, which may be a rechargeable battery.

[0042] In certain embodiments, the data processing and transmitter unit 102 is also configured such that the power supply section 207 is capable of providing power to the transmitter for a minimum of about three months of continuous operation, e.g., after having been stored for about eighteen months such as stored in a low-power (non-operating) mode. In one embodiment, this may be achieved by the transmitter processor 204 operating in low power modes in the non-operating state, for example, drawing no more than approximately 1 μA of current. Indeed, in one embodiment, a step during the manufacturing process of the data processing and transmitter unit 102 may place the data processing and transmitter unit 102 in the lower power, non-operating state (i.e., post-manufacture sleep mode). In this manner, the shelf life of the data processing and transmitter unit 102 may be significantly improved. Moreover, as shown in FIG. 2, while the power supply unit 207 is shown as coupled to the processor 204, and as such, the processor 204 is configured to provide control of the power supply unit 207, it should be noted that within the scope of the present disclosure, the power supply unit 207 is configured to

provide the necessary power to each of the components of the data processing and transmitter unit 102 shown in FIG. 2.

[0043] Referring back to FIG. 2, the power supply section 207 of the data processing and transmitter unit 102 in one embodiment may include a rechargeable battery unit that may be recharged by a separate power supply recharging unit (for example, provided in the receiver unit 104) so that the data processing and transmitter unit 102 may be powered for a longer period of usage time. Moreover, in one embodiment, the data processing and transmitter unit 102 may be configured without a battery in the power supply section 207, in which case the data processing and transmitter unit 102 may be configured to receive power from an external power supply source (for example, a battery) as discussed in further detail below.

[0044] Referring yet again to FIG. 2, the temperature measurement section 203 of the data processing and transmitter unit 102 is configured to monitor the temperature of the skin near the sensor insertion site. The temperature reading is used to adjust the analyte readings obtained from the analog interface 201. In certain embodiments, the RF transmitter 206 of the transmitter unit 102 may be configured for operation in the frequency band of approximately 315 MHz to approximately 322 MHz, for example, in the United States. In certain embodiments, the RF transmitter 206 of the transmitter unit 102 may be configured for operation in the frequency band of approximately 400 MHz to approximately 470 MHz. Further, in one embodiment, the RF transmitter 206 is configured to modulate the carrier frequency by performing Frequency Shift Keying and Manchester encoding. In one embodiment, the data transmission rate is about 19,200 symbols per second, with a minimum transmission range for communication with the primary receiver unit 104.

[0045] Referring yet again to FIG. 2, also shown is a leak detection circuit 214 coupled to the guard electrode (G) 211 and the processor 204 in the transmitter unit 102 of the data monitoring and management system 100. The leak detection circuit 214 in accordance with one embodiment of the present disclosure may be configured to detect leakage current in the sensor unit 101 to determine whether the measured sensor data are corrupt or whether the measured data from the sensor 101 is accurate. Exemplary analyte systems that may be employed are described in, for example, U.S. Pat. Nos. 6,134,461, 6,175,752, 6,121,611, 6,560,471, 6,746,582, and elsewhere, the disclosure of each of which are incorporated by reference for all purposes.

[0046] FIG. 3 is a block diagram of the receiver/monitor unit of the data monitoring and management system shown in FIG. 1 in accordance with one embodiment of the present disclosure. Referring to FIG. 3, the primary receiver unit 104 includes an analyte test strip, e.g., blood glucose test strip, interface 301, an RF receiver 302, an input 303, a temperature monitor section 304, and a clock 305, each of which is operatively coupled to a receiver processor 307. As can be further seen from the Figure, the primary receiver unit 104 also includes a power supply 306 operatively coupled to a power conversion and monitoring section 308. Further, the power conversion and monitoring section 308 is also coupled to the receiver processor 307. Moreover, also shown are a receiver serial communication section 309, and an output 310, each operatively coupled to the receiver processor 307.

[0047] In one embodiment, the test strip interface 301 includes a glucose level testing portion to receive a manual insertion of a glucose test strip, and thereby determine and display the glucose level of the test strip on the output 310 of the primary receiver unit 104. This manual testing of glucose may be used to calibrate the sensor unit 101 or otherwise. The RF receiver 302 is configured to communicate, via the communication link 103 (FIG. 1) with the RF transmitter 206 of the transmitter unit 102, to receive encoded data signals from the transmitter unit 102 for, among others, signal mixing, demodulation, and other data processing. The input 303 of the primary receiver unit 104 is configured to allow the user to enter information into the primary receiver unit 104 as needed. In one aspect, the input 303 may include one or more keys of a keypad, a touch-sensitive screen, or a voice-activated input command unit. The temperature monitor section 304 is configured to provide temperature information of the primary receiver unit 104 to the receiver processor 307, while the clock 305 provides, among others, real time information to the receiver processor 307.

[0048] Each of the various components of the primary receiver unit 104 shown in FIG. 3 is powered by the power supply 306 which, in one embodiment, includes a battery. Furthermore, the power conversion and monitoring section 308 is configured to monitor the power usage by the various components in the primary receiver unit 104 for effective power management and to alert the user, for example, in the event of power usage which renders the primary receiver unit 104 in sub-optimal operating conditions. An example of such sub-optimal operating condition may include, for example, operating the vibration output mode (as discussed below) for a period of time thus substantially draining the power supply 306 while the processor 307 (thus, the

primary receiver unit 104) is turned on. Moreover, the power conversion and monitoring section 308 may additionally be configured to include a reverse polarity protection circuit such as a field effect transistor (FET) configured as a battery activated switch.

[0049] The serial communication section 309 in the primary receiver unit 104 is configured to provide a bi-directional communication path from the testing and/or manufacturing equipment for, among others, initialization, testing, and configuration of the primary receiver unit 104. Serial communication section 104 can also be used to upload data to a computer, such as time-stamped blood glucose data. The communication link with an external device (not shown) can be made, for example, by cable, infrared (IR) or RF link. The output 310 of the primary receiver unit 104 is configured to provide, among others, a graphical user interface (GUI) such as a liquid crystal display (LCD) for displaying information. Additionally, the output 310 may also include an integrated speaker for outputting audible signals as well as to provide vibration output as commonly found in handheld electronic devices, such as mobile telephones presently available. In a further embodiment, the primary receiver unit 104 also includes an electro-luminescent lamp configured to provide backlighting to the output 310 for output visual display in dark ambient surroundings.

[0050] Referring back to FIG. 3, the primary receiver unit 104 in one embodiment may also include a storage section such as a programmable, non-volatile memory device as part of the processor 307, or provided separately in the primary receiver unit 104, operatively coupled to the processor 307. The processor 307 may be configured to synchronize with a transmitter, e.g., using Manchester decoding or the like, as well as error detection and correction upon the encoded data signals received from the transmitter unit 102 via the communication link 103.

[0051] Periodic calibration of the sensor unit 101 (FIG. 1) of an analyte monitoring system 100, in some embodiments, may be required for accurate calculation of a user's analyte level. Calibration, in some aspects, is used to ensure the analyte related data signals received at a transmitter unit 102 (and further transmitted to a receiver unit, such as the primary receiver unit 104) are correctly converted to corresponding analyte levels. Exemplary calibration protocols, routines and techniques are described, for example, in U.S. Pat. No. 7,299,082, U.S. patent application Ser. No. 11/537,991 filed Oct. 2, 2006, U.S. patent application Ser. No. 12/363,706 filed Jan. 30, 2009 and in U.S. patent application Ser. No. 12/363,712 filed Jan. 30, 2009, the disclosures of each of which are herein incorporated by reference for all purposes.

[0052] There are time periods where the sensor characteristics or the user's physiological condition renders the condition unsuitable for a sensor calibration event. For example, the sensor may be configured for periodic calibration, such as, after 2 hours after insertion, 10 hours after insertion, 12 hours after insertion, 24 hours after insertion, 48 hours after insertion, or 72 hours after insertion, or one or more combinations thereof. If a predetermined calibration event is triggered but a successful calibration does not result, after a certain time period (for example, a predetermined grace period during which to calibrate), the receiver unit may no longer display the monitored and processed glucose information.

[0053] Other conditions may also result in rendering the condition unsuitable for sensor calibration including, but not limited to, detection of a failure mode of a sensor, sensor data values being outside a predetermined range, rate of change of sensor data values being above a predetermined threshold, a temperature measurement outside a predetermined range, or any combination thereof.

[0054] FIG. 4 illustrates analyte sensor data processing in accordance with one embodiment of the present disclosure. Referring to FIG. 4, a transmitter unit 102 (FIG. 1) in operational contact with a sensor 101 receives analyte related sensor data (410) corresponding to a measured level of a biological fluid of the user. For example, the sensor 101 (FIG. 1) may be an analyte sensor configured to detect and measure the concentration of an analyte in a biological fluid, such as the blood of a user. Upon receipt of the analyte related sensor data, the transmitter unit 102 further transmits the analyte related sensor data to a receiver unit, such as primary receiver unit 104 (FIG. 1). It is to be noted that the reference to analyte related sensor data herein and throughout specification includes, for example, current signal received from the analyte sensor, as well as the current signal which has undergone a predetermined data processing routines including, for example, filtering, clipping, digitizing, and/or encoding, and/or any other further processing and/or conditioning. In one aspect, the primary receiver unit 104 determines whether the sensor is calibrated and is in acceptable condition for further data processing (420). When sensor related conditions are unsuitable for calibration, the analyte related sensor data is stored (450) in a memory, for example, in the primary receiver unit 104.

[0055] Referring still to FIG. 4, if the sensor data is calibrated and in condition for further data processing, the sensor data is further processed (430) and output for display (440) to a user on a

display unit 310 (FIG. 3) of the primary receiver unit 104. In one embodiment, the display of the processed sensor data comprises a graphical representation of the processed sensor data. In other embodiments, the processed sensor data may be displayed as numerical values, visual indicators, auditory outputs, or combinations thereof. In one aspect, the processing routine described in conjunction with FIG. 4 is performed or executed in, for example, the transmitter unit 102, the secondary receiver unit 106 (FIG. 1), or the data processing terminal 105 (FIG. 1) of the analyte monitoring system 100 (FIG. 1) based on analyte data received from the sensor 101.

[0056] FIG. 5 illustrates analyte sensor data processing in accordance with one embodiment of the present disclosure. Referring to FIG. 5, in one embodiment, transmitter unit 102 (FIG. 1) receives analyte related sensor data (510) from a sensor 101 (FIG. 1). Upon receipt of the analyte related sensor data, the transmitter unit 102 transmits the analyte related sensor data (or processed, digitized, and/or filtered signals) to the primary receiver unit 104 (FIG. 1). The primary receiver unit 104 is configured to determine if calibration of the sensor data is suitable--that is, whether the conditions necessary for sensor calibration are met (520).

[0057] Still referring to FIG. 5, if it is determined that the sensor 101 is not calibrated or calibration condition for calibrating the sensor 101 is not met, in one aspect, the primary receiver unit stores the analyte related sensor data in a memory (550) and temporarily disables display of the sensor data (560) to the user (for example, if a calibration event has not occurred and the calibration grace period has expired). On the other hand, if the sensor 101 is calibrated, the sensor data is processed (530) by the primary receiver unit 104 and the processed sensor data is output to the user (540), for example via a display unit 310 (FIG. 3) of the primary receiver unit 104. In one aspect, the processing routine described in conjunction with FIG. 5 is performed or executed in, for example, the transmitter unit 102, the secondary receiver unit 106, or the data processing terminal 105 of the analyte monitoring system 100 based on analyte data received from the sensor 101 (FIG. 1).

[0058] In one aspect, the display or output of processed sensor data may be disabled if a required calibration event is unsuccessful over a permitted time period (for example, including a predetermined grace period measured from the scheduled calibration). Thereafter, upon successful calibration, the system resumes display of the processed and calibrated analyte sensor data. However, there may be a time period or a gap in the output display during which the necessary calibration did not occur in a timely manner. For example, as shown in FIG. 7A, if

sensor data is displayed as a graphical display, during time periods where the analyte monitoring system 100 was not properly calibrated, analyte related sensor data was not processed and/or displayed, resulting in a gap in the graphical display.

[0059] FIG. 6 illustrates backfilling gaps in sensor data in one embodiment of the present disclosure. Referring to FIG. 6, when a scheduled calibration event fails and the associated grace period for calibration does not occur, the output display of the processed, calibrated sensor data is disabled (610). Referring to FIG. 6, once the system recovers after a successful calibration event, the calibrated sensor data is once again displayed (and stored). Furthermore, in one aspect, based on the parameters associated with the successful calibration, the previously unprocessed data during the display time out period may be retrieved (for example, the previously stored analyte related sensor signals during this period) and processed using calibration data, such as a sensitivity ratio for conversion of analyte related sensor data to analyte levels. For example, in one aspect, the subset of analyte related sensor data that were previously unprocessed or uncalibrated due to unsuccessful contemporaneous calibration may be processed using, for example, calibration data such as the sensitivity ratio determined from the most recent successful calibration event, and thereafter, the gap in output display illustrating the processed and calibrated signals may be filled.

[0060] In one aspect, once successful calibration of the sensor data occurs, the calibration parameters from this calibration event may be used to process the sensor data during the period of disabled output or display (620). Upon successful processing of the sensor data during the period of disabled output, the processed sensor data during this time period is backfilled, or the gap in the processed continuous sensor data are filled in the display (630). By way of an example, FIGS. 7A and 7B illustrate the replacement of a period of unprocessed sensor data with corresponding backfilled processed sensor data, in one embodiment.

[0061] In one embodiment, the backfilled processed sensor data is displayed immediately upon calculation. In another embodiment, the backfilled processed sensor data is not displayed immediately, but rather, after waiting a predetermined period of time. The backfilled processed sensor data may not be displayed immediately to avoid possible unnecessary or incorrect action by a user in response to the backfilled processed sensor data. In this manner, in one aspect, the user or a healthcare provider may be provided with a continuous set of analyte data from the analyte monitoring system without any gaps in the processed signals for further analysis and/or

therapy management.

[0062] In this manner, in accordance with the embodiments of the present disclosure, gaps in monitored analyte levels using an analyte monitoring system due to, for example, inability to promptly calibrate the sensor, system malfunction, sensor dislodging, signal errors associated with the sensor, transmitter unit, receiver unit, and the like, or any other variables or parameters that result in the inability of the analyte monitoring system to display or output the real-time monitored analyte level, may be retrospectively filled or reprocessed so that the data gap is closed and the continuously monitored analyte level does not have any or substantially missing data. That is, in embodiments of the present disclosure, upon correction or rectification of the condition or conditions/parameters which resulted in the analyte monitoring system disabling the output results associated with the monitored real time analyte levels, the parameters associated with the correction or rectification may be used to retrospectively correct or process data or signals so that the missing gaps in analyte related data may be processed and backfilled.

[0063] In this manner, advantageously, in aspects of the present disclosure, additional robustness may be provided to the user and/or the healthcare provider to improve therapy or health management decisions.

[0064] In one embodiment, a method may include receiving sensor data from an analyte sensor of a sensor monitoring system, processing the received sensor data with time corresponding calibration data, outputting the processed sensor data, detecting one or more adverse conditions associated with the sensor monitoring system, disabling the output of the sensor data during an adverse condition time period, determining that the one or more detected adverse conditions is no longer present in the sensor monitoring system, retrieving the sensor data during the adverse condition time period, processing the retrieved sensor data during the adverse condition time period, and outputting the processed retrieved sensor data.

[0065] In one aspect, outputting the processed sensor data may include displaying the sensor data in one or more of a graphical, numerical, pictorial, audible, vibratory, or one or more combinations thereof.

[0066] The one or more detected adverse conditions may include one or more of a sensor instability condition, a calibration failure condition, or a monitoring system failure condition.

[0067] The sensor instability condition may include one or more of an early signal attenuation condition of the sensor, sensor misposition error, sensor communication error, temperature

measurement outside a predetermined range, or a combination thereof.

[0068] The calibration failure condition may include one or more of an analyte level exceeding a predetermined threshold, a rate of change of analyte level exceeding a predetermined threshold, a signal error associated with the reference data, a data unavailability condition, or a combination thereof.

[0069] Furthermore, the method may include storing the processed sensor data with the associated time information based on the analyte level detection time by the sensor.

[0070] In another embodiment, a method may include detecting a condition unsuitable for calibration of an analyte sensor for a predetermined time period, disabling output of information associated with the analyte sensor, determining a successful calibration of the analyte sensor, retrieving one or more parameters associated with the successful calibration, processing sensor data during the time period of disabled output of information with the one or more parameters associated with the successful calibration, and displaying the processed sensor data for the time period of disabled information output.

[0071] The sensor data may be analyte concentration data.

[0072] The analyte concentration data may include blood glucose concentration data.

[0073] The sensor data may be processed in substantially real-time.

[0074] The condition unsuitable for calibration may include one or more of a failure mode of a sensor, sensor data outside a predetermined acceptable range, a rate of change of sensor data above a predetermined level, a requirement for calibration of a sensor, a temperature measurement outside a predetermined range, or any combination thereof.

[0075] The processed sensor data for the time period of disabled information output may be displayed substantially immediately upon processing.

[0076] The processed sensor data for the time period of disabled information output may be displayed only after waiting a predetermined period of time.

[0077] In another embodiment, an apparatus may include an interface configured to receive sensor data, a first memory configured to store the received sensor data, a processor coupled to the memory and configured to process the stored sensor data, a second memory coupled to the processor and configured to store the processed sensor data, and a display unit coupled to the second memory and configured to display the processed sensor data, wherein the processor is further configured to detect a condition unsuitable for calibration of a sensor for a predetermined

time period, disable display of processed sensor data, determine a successful calibration of the sensor, retrieve one or more parameters associated with the successful calibration, process the sensor data during the time period of disabled display of sensor data with the one or more parameters associated with the successful calibration, and display the processed sensor data for the time period of disabled information output.

[0078] The sensor may be an analyte sensor.

[0079] The analyte sensor may be a glucose sensor.

[0080] The sensor data may correspond to analyte concentration data.

[0081] The analyte concentration data may include blood glucose concentration data.

[0082] Furthermore, the apparatus may be configured to process and display the sensor data substantially in real-time.

[0083] In one aspect, the condition unsuitable for calibration may include one or more of a failure mode of a sensor, sensor data outside a predetermined acceptable range, a rate of change of sensor data above a predetermined level, a requirement for calibration of a sensor, a temperature measurement outside a predetermined range, or any combination thereof.

[0084] The display unit may be configured to display the processed sensor data for the time period of disabled information output substantially immediately upon processing the sensor data.

[0085] The display unit may be configured to display the processed sensor data for the time period of disabled information output only after waiting a predetermined period of time.

[0086] Various other modifications and alterations in the structure and method of operation of this invention will be apparent to those skilled in the art without departing from the scope and spirit of the invention. Although the invention has been described in connection with specific preferred embodiments, it should be understood that the invention as claimed should not be unduly limited to such specific embodiments. It is intended that the following claims define the scope of the present disclosure and that structures and methods within the scope of these claims and their equivalents be covered thereby.

WHAT IS CLAIMED IS:

1. A method, comprising:

receiving sensor data from an analyte sensor of a sensor monitoring system;

processing the received sensor data with time corresponding calibration data;

outputting the processed sensor data;

detecting one or more adverse conditions associated with the sensor monitoring system;

disabling the output of the sensor data during an adverse condition time period;

determining that the one or more detected adverse conditions is no longer present in the sensor monitoring system;

retrieving the sensor data during the adverse condition time period;

processing the retrieved sensor data during the adverse condition time period; and

outputting the processed retrieved sensor data.

2. The method of claim 1, wherein outputting the processed sensor data includes displaying the sensor data in one or more of a graphical, numerical, pictorial, audible, vibratory, or one or more combinations thereof.

3. The method of claim 1, wherein the one or more detected adverse conditions includes one or more of a sensor instability condition, a calibration failure condition, or a monitoring system failure condition.

4. The method of claim 3, wherein the sensor instability condition includes one or more of an early signal attenuation condition of the sensor, sensor mis-position error, sensor communication error, temperature measurement outside a predetermined range, or a combination thereof.

5. The method of claim 3, wherein the calibration failure condition includes one or more of an analyte level exceeding a predetermined threshold, a rate of change of analyte level exceeding a predetermined threshold, a signal error associated with the reference data, a data unavailability condition, or a combination thereof.

6. The method of claim 1 including storing the processed sensor data with the

associated time information based on the analyte level detection time by the sensor.

7. A method, comprising:

detecting a condition unsuitable for calibration of an analyte sensor for a predetermined time period;

disabling output of information associated with the analyte sensor;

determining a successful calibration of the analyte sensor;

retrieving one or more parameters associated with the successful calibration;

processing sensor data during the time period of disabled output of information with the one or more parameters associated with the successful calibration; and

displaying the processed sensor data for the time period of disabled information output.

8. The method of claim 7, wherein the sensor data is analyte concentration data.

9. The method of claim 8, wherein the analyte concentration data includes blood glucose concentration data.

10. The method of claim 7, wherein the sensor data is processed in substantially real-time.

11. The method of claim 7, wherein the condition unsuitable for calibration includes one or more of a failure mode of a sensor, sensor data outside a predetermined acceptable range, a rate of change of sensor data above a predetermined level, a requirement for calibration of a sensor, a temperature measurement outside a predetermined range, or any combination thereof.

12. The method of claim 7, wherein the processed sensor data for the time period of disabled information output is displayed substantially immediately upon processing.

13. The method of claim 7, wherein the processed sensor data for the time period of disabled information output is displayed only after waiting a predetermined period of time.

14. An apparatus, comprising:

an interface configured to receive sensor data;

a first memory configured to store the received sensor data;

a processor coupled to the memory and configured to process the stored sensor data;

a second memory coupled to the processor and configured to store the processed sensor data; and

a display unit coupled to the second memory and configured to display the processed sensor data;

wherein the processor is further configured to:

detect a condition unsuitable for calibration of a sensor for a predetermined time period;

disable display of processed sensor data;

determine a successful calibration of the sensor; retrieve one or more parameters associated with the successful calibration;

process the sensor data during the time period of disabled display of sensor data with the one or more parameters associated with the successful calibration; and

display the processed sensor data for the time period of disabled information output.

15. The apparatus of claim 14, wherein the sensor is an analyte sensor.

16. The apparatus of claim 15, wherein the analyte sensor is a glucose sensor.

17. The apparatus of claim 15, wherein the sensor data corresponds to analyte concentration data.

18. The apparatus of claim 17, wherein the analyte concentration data includes blood glucose concentration data.

19. The apparatus of claim 14 configured to process and display the sensor data substantially in real-time.

20. The apparatus of claim 14, wherein the condition unsuitable for calibration includes one or more of a failure mode of a sensor, sensor data outside a predetermined acceptable range, a rate of change of sensor data above a predetermined level, a requirement for calibration of a sensor, a temperature measurement outside a predetermined range, or any combination thereof.

21. The apparatus of claim 14, wherein the display unit is configured to display the processed sensor data for the time period of disabled information output substantially immediately upon processing the sensor data.

22. The apparatus of claim 14, wherein the display unit is configured to display the processed sensor data for the time period of disabled information output only after waiting a predetermined period of time.

ABSTRACT OF THE DISCLOSURE

Provided are methods and apparatus for receiving sensor data from an analyte sensor of a sensor monitoring system, processing the received sensor data with time corresponding calibration data, outputting the processed sensor data, detecting one or more adverse conditions associated with the sensor monitoring system, disabling the output of the sensor data during the adverse condition time period, determining that the one or more detected adverse conditions is no longer present in the sensor monitoring system, retrieving the sensor data during the adverse condition time period, processing the retrieved sensor data during the adverse condition time period, and outputting the processed retrieved sensor data.

Docket Nos.: A0130.0090.C1C1
9368USC2
(PATENT)

IN THE UNITED STATES PATENT AND TRADEMARK OFFICE

In re Patent Application of:
Wesley Scott Harper

Application No.: Not yet assigned

Confirmation No.: Not yet assigned

Filed: March 3, 2016

Art Unit: Not yet assigned

For: METHODS AND SYSTEMS FOR EARLY SIGNAL ATTENUATION DETECTION AND PROCESSING

Examiner: Not yet assigned

INFORMATION DISCLOSURE STATEMENT (IDS)

EFS Web
Commissioner for Patents

Dear Sir:

Pursuant to 37 CFR 1.56, 1.97 and 1.98, the attention of the Patent and Trademark Office is hereby directed to the references listed on the attached PTO/SB/08. It is respectfully requested that the information be expressly considered during the prosecution of this application, and that the references be made of record therein and appear among the "References Cited" on any patent to issue therefrom.

Timing of Filing of the Information Disclosure Statement:

☒ This IDS is being filed before the First Office Action.

☐ This IDS is being filed after the issuance of the First Office Action but before the issuance of a Final Office Action.

☐ This IDS is being filed after the issuance of a Final Office Action, Ex Parte Quayle Action or Notice of Allowance but before the payment of the Issue Fee.

Certifications:

If checked, the undersigned makes the following statement(s):

☐ Statement under 37 CFR § 1.97(e):

☐ Each item of information contained in this information disclosure statement was first cited in any communication from a foreign patent office in a counterpart foreign application not more than three months prior to the filing of this information disclosure statement; or

☐ No item of information contained in this information disclosure statement was cited in a communication from a foreign patent office in a counterpart foreign application, and, to the knowledge of the undersigned after making reasonable inquiry, no item of information contained in this information disclosure statement was known to any individual designated in § 1.56(c) more than three months prior to the filing of the information disclosure statement.

☐ Statement Under 37 C.F.R. § 1.704(d):

Each item of information contained in this information disclosure statement was cited a counterpart application less than thirty days prior to the filing of this information disclosure statement.

Fee Required by 37 C.F.R. § 1.97(c)(2) or 1.97(d)(2):

☐ If checked, the fee of $180.00 set forth in 37 C.F.R. §1.17(p).

Copies of Information:

In accordance with 37 C.F.R. §1.98(a), the following are enclosed:

☒ A legible copy of each document (or relevant portion thereof) cited in the attached PTO/SB/08, except for U.S. patent and U.S. published applications.

☒ With respect to any information which is not in English, a concise explanation of the relevance, as it is presently understood by the individual designated in § 1.56(c) most knowledgeable about the content of the information, is attached.

This concise explanation is provided by way of:

☒ A translation of the relevant portions of the non-English language information;

☐ A statement explaining the relevant portions of the non-English language information;

☐ A copy [and where not in the English language, a translation] of at least the relevant portion(s) of the communication from _____in which the information was cited; or

☐ This information is contained in the specification of the present application.

☒ In accordance with 37 C.F.R. 1.98(d), copies of the cited documents are not enclosed as they were provided in application Serial Nos. 12/769,635, filed April 28, 2010, and 13/925,694, filed June 24, 2013, which the present application relies upon for an earlier effective filing date under 35 U.S.C. 120.

Materiality:

Whether or not the information and references disclosed in this Information Disclosure Statement is "material" pursuant to 37 CFR 1.56, this submission is not intended to constitute an admission that any patent, publication or other information referred to therein is "prior art" for this invention unless specifically designated as such.

In accordance with 37 CFR 1.97(g), the filing of this Information Disclosure Statement shall not be construed to mean that a search has been made or that no other material information as defined in 37 CFR 1.56(a) exists.

It is submitted that the Information Disclosure Statement is in compliance with 37 CFR 1.98 and the Examiner is respectfully requested to consider the listed references.

The Director is hereby authorized to charge any deficiency in the fees filed, asserted to be filed or which should have been filed herewith (or with any paper hereafter filed in this application by this firm) to our Deposit Account No. 50-5201.

Dated: March 4, 2016

Respectfully submitted,

Electronic signature: /Mark Stirrat/
Mark Stirrat
Registration No.: 50,756
ONE LLP
4000 MacArthur Boulevard
East Tower, Suite 500
(949) 444-5970
Attorney for Applicants