UNITED STATES PATENT AND TRADEMARK OFFICE

UNITED STATES DEPARTMENT OF COMMERCE
United States Patent and Trademark Office
Address: COMMISSIONER FOR PATENTS
P.O. Box 1450
Alexandria, Virginia 22313-1450
www.uspto.gov

APPLICATION NO.	FILING DATE	FIRST NAMED INVENTOR	ATTORNEY DOCKET NO.	CONFIRMATION NO.
12/056,651	03/27/2008	Himanshu Patel	P25732 US	9941

23608 7590 02/26/2015
MEDTRONIC MINIMED, INC.
18000 Devonshire Street
Northridge, CA 91325-1219

EXAMINER
MESSERSMITH, ERIC J

ART UNIT	PAPER NUMBER
3735	

NOTIFICATION DATE	DELIVERY MODE
02/26/2015	ELECTRONIC

Please find below and/or attached an Office communication concerning this application or proceeding.

The time period for reply, if any, is set in the attached communication.

Notice of the Office communication was sent electronically on above-indicated "Notification Date" to the following e-mail address(es):

medtronic_diabetes_docketing@cardinal-ip.com

DEXCOM
EXHIBIT 1013

Notice of Abandonment	Application No.	Applicant(s)
	12/056,651	PATEL ET AL.
	Examiner	**Art Unit**
	Eric Messersmith	3735

-- The MAILING DATE of this communication appears on the cover sheet with the correspondence address--

This application is abandoned in view of:

1. ☒ Applicant's failure to timely file a proper reply to the Office letter mailed on *14 August 2014*.
   (a) ☐ A reply was received on _____ (with a Certificate of Mailing or Transmission dated _____), which is after the expiration of the period for reply (including a total extension of time of _____ month(s)) which expired on _____.
   (b) ☐ A proposed reply was received on _____, but it does not constitute a proper reply under 37 CFR 1.113 to the final rejection.
   (A proper reply under 37 CFR 1.113 to a final rejection consists only of: (1) a timely filed amendment which places the application in condition for allowance; (2) a timely filed Notice of Appeal (with appeal fee); or (3) if this is utility or plant application, a timely filed Request for Continued Examination (RCE) in compliance with 37 CFR 1.114. Note that RCEs are not permitted in design applications.)
   (c) ☐ A reply was received on _____ but it does not constitute a proper reply, or a bona fide attempt at a proper reply, to the non-final rejection. See 37 CFR 1.85(a) and 1.111. (See explanation in box 7 below).
   (d) ☒ No reply has been received.

2. ☐ Applicant's failure to timely pay the required issue fee and publication fee, if applicable, within the statutory period of three months from the mailing date of the Notice of Allowance (PTOL-85).
   (a) ☐ The issue fee and publication fee, if applicable, was received on _____ (with a Certificate of Mailing or Transmission dated _____), which is after the expiration of the statutory period for payment of the issue fee (and publication fee) set in the Notice of Allowance (PTOL-85).
   (b) ☐ The submitted fee of $_____ is insufficient. A balance of $_____ is due.
   The issue fee required by 37 CFR 1.18 is $_____. The publication fee, if required by 37 CFR 1.18(d), is $_____.
   (c) ☐ The issue fee and publication fee, if applicable, has not been received.

3. ☐ Applicant's failure to timely file corrected drawings as required by, and within the three-month period set in, the Notice of Allowability (PTO-37).
   (a) ☐ Proposed corrected drawings were received on _____ (with a Certificate of Mailing or Transmission dated _____), which is after the expiration of the period for reply.
   (b) ☐ No corrected drawings have been received.

4. ☐ The letter of express abandonment which is signed by the attorney or agent of record or other party authorized under 37 CFR 1.33(b). See 37 CFR 1.138(b).

5. ☐ The letter of express abandonment which is signed by an attorney or agent (acting in a representative capacity under 37 CFR 1.34) upon the filing of a continuing application.

6. ☐ The decision by the Board of Patent Appeals and Interference rendered on _____ and because the period for seeking court review of the decision has expired and there are no allowed claims.

7. ☒ The reason(s) below:

On February 20, 2015, Examiner spoke to Applicants' representative, Konrad Chan, who indicated that no response had been filed.

/NAVIN NATNITHITHADHA/
Primary Examiner, Art Unit 3735

Petitions to revive under 37 CFR 1.137, or requests to withdraw the holding of abandonment under 37 CFR 1.181, should be promptly filed to minimize any negative effects on patent term.

UNITED STATES PATENT AND TRADEMARK OFFICE

UNITED STATES DEPARTMENT OF COMMERCE
United States Patent and Trademark Office
Address: COMMISSIONER FOR PATENTS
P.O. Box 1450
Alexandria, Virginia 22313-1450
www.uspto.gov

APPLICATION NO.	FILING DATE	FIRST NAMED INVENTOR	ATTORNEY DOCKET NO.	CONFIRMATION NO.
12/056,651	03/27/2008	Himanshu Patel	P25732 US	9941

23608 7590 08/14/2014
MEDTRONIC MINIMED, INC.
18000 Devonshire Street
Northridge, CA 91325-1219

EXAMINER
MESSERSMITH, ERIC J

ART UNIT	PAPER NUMBER
3735	

NOTIFICATION DATE	DELIVERY MODE
08/14/2014	ELECTRONIC

Please find below and/or attached an Office communication concerning this application or proceeding.

The time period for reply, if any, is set in the attached communication.

Notice of the Office communication was sent electronically on above-indicated "Notification Date" to the following e-mail address(es):

medtronic_diabetes_docketing@cardinal-ip.com

Office Action Summary	Application No. 12/056,651	Applicant(s) PATEL ET AL.	
	Examiner Eric Messersmith	Art Unit 3735	AIA (First Inventor to File) Status No

-- The MAILING DATE of this communication appears on the cover sheet with the correspondence address --

Period for Reply

A SHORTENED STATUTORY PERIOD FOR REPLY IS SET TO EXPIRE 3 MONTHS FROM THE MAILING DATE OF THIS COMMUNICATION.

- Extensions of time may be available under the provisions of 37 CFR 1.136(a). In no event, however, may a reply be timely filed after SIX (6) MONTHS from the mailing date of this communication.
- If NO period for reply is specified above, the maximum statutory period will apply and will expire SIX (6) MONTHS from the mailing date of this communication.
- Failure to reply within the set or extended period for reply will, by statute, cause the application to become ABANDONED (35 U.S.C. § 133). Any reply received by the Office later than three months after the mailing date of this communication, even if timely filed, may reduce any earned patent term adjustment. See 37 CFR 1.704(b).

Status

1)☒ Responsive to communication(s) filed on *4/15/2014*.

☐ A declaration(s)/affidavit(s) under **37 CFR 1.130(b)** was/were filed on _____.

2a)☒ This action is **FINAL**. 2b)☐ This action is non-final.

3)☐ An election was made by the applicant in response to a restriction requirement set forth during the interview on _____; the restriction requirement and election have been incorporated into this action.

4)☐ Since this application is in condition for allowance except for formal matters, prosecution as to the merits is closed in accordance with the practice under *Ex parte Quayle*, 1935 C.D. 11, 453 O.G. 213.

Disposition of Claims*

5)☒ Claim(s) *1,2,4-7,9-15 and 17-25* is/are pending in the application.

5a) Of the above claim(s) _____ is/are withdrawn from consideration.

6)☐ Claim(s) _____ is/are allowed.

7)☒ Claim(s) *1,2,4-7,9-15 and 17-25* is/are rejected.

8)☐ Claim(s) _____ is/are objected to.

9)☐ Claim(s) _____ are subject to restriction and/or election requirement.

* If any claims have been determined allowable, you may be eligible to benefit from the **Patent Prosecution Highway** program at a participating intellectual property office for the corresponding application. For more information, please see http://www.uspto.gov/patents/init_events/pph/index.jsp or send an inquiry to PPHfeedback@uspto.gov.

Application Papers

10)☐ The specification is objected to by the Examiner.

11)☒ The drawing(s) filed on *3/27/2008* is/are: a)☒ accepted or b)☐ objected to by the Examiner.

Applicant may not request that any objection to the drawing(s) be held in abeyance. See 37 CFR 1.85(a).

Replacement drawing sheet(s) including the correction is required if the drawing(s) is objected to. See 37 CFR 1.121(d).

Priority under 35 U.S.C. § 119

12)☐ Acknowledgment is made of a claim for foreign priority under 35 U.S.C. § 119(a)-(d) or (f).

Certified copies:

a)☐ All b)☐ Some** c)☐ None of the:

1.☐ Certified copies of the priority documents have been received.

2.☐ Certified copies of the priority documents have been received in Application No. _____.

3.☐ Copies of the certified copies of the priority documents have been received in this National Stage application from the International Bureau (PCT Rule 17.2(a)).

** See the attached detailed Office action for a list of the certified copies not received.

Attachment(s)

1) ☒ Notice of References Cited (PTO-892)

2) ☐ Information Disclosure Statement(s) (PTO/SB/08a and/or PTO/SB/08b) Paper No(s)/Mail Date _____.

3) ☐ Interview Summary (PTO-413) Paper No(s)/Mail Date. _____ .

4) ☐ Other: _____.

DETAILED ACTION

Notice of Pre-AIA or AIA Status

The present application is being examined under the pre-AIA first to invent provisions.

Claim Rejections - 35 USC § 103

The following is a quotation of pre-AIA 35 U.S.C. 103(a) which forms the basis for all obviousness rejections set forth in this Office action:

> (a) A patent may not be obtained though the invention is not identically disclosed or described as set forth in section 102 of this title, if the differences between the subject matter sought to be patented and the prior art are such that the subject matter as a whole would have been obvious at the time the invention was made to a person having ordinary skill in the art to which said subject matter pertains. Patentability shall not be negatived by the manner in which the invention was made.

The factual inquiries set forth in *Graham v. John Deere Co.*, 383 U.S. 1, 148 USPQ 459 (1966), that are applied for establishing a background for determining obviousness under pre-AIA 35 U.S.C. 103(a) are summarized as follows:

1. Determining the scope and contents of the prior art.

2. Ascertaining the differences between the prior art and the claims at issue.

3. Resolving the level of ordinary skill in the pertinent art.

4. Considering objective evidence present in the application indicating obviousness or nonobviousness.

Claims 1, 2, 9-12, 14, 15, and 17-23 are rejected under pre-AIA 35 U.S.C. 103(a) as being unpatentable over US 2006/083985 A1 to Brister et al. ("Brister") in view of US 2008/0319296 A1 to Bernstein et al. ("Bernstein") and further in view of US 6,175,752 B1 to Say et al. ("Say").

As to claim 1, Brister discloses

a telemetered characteristic sensor transceiver for exchanging data with a synchronous remote device and an asynchronous remote device, the transceiver comprising:

a transceiver housing detachably coupled to a sensor located on a body of a user, the sensor producing a signal indicative of a user characteristic ([0494]; Fig 14A, element 148), the sensor being affixed to the user with a single adhesive tape (see [0271]; Fig 14B, element 9);

a processor formed within the transceiver housing and in communication with the sensor for processing the signal produced by the sensor (see Fig 14A, element 138);

a transmitter coupled to the processor for transmitting data to the synchronous remote device (see [0477]; Fig 14A, element 148);

a receiver coupled to the processor for receiving data from the synchronous remote device (see [0477]; Fig 14A, element 148); and

a memory coupled to the processor for storing data (see [0508]--flash memory),

wherein a transceiver housing coupled to a sensor affixed to the user remains in a fixed position supported by the single adhesive tape (see Fig 14B, elements 9, 16), the processor performs calculations using at least one of the signal produced by the sensor ([507] – "input module 174 sends the [sensor] data stream to a processor 176 that processes the data stream…"), the data received from at least one of the synchronous remote device or the asynchronous remote device and the data stored in the memory, the processor further performs at least one of storing the calculations in the memory and transmitting the calculations to at least one of the synchronous remote device memory ([0508] -- sensor data is stored prior to be compared and/or analyzed).

Brister does not explicitly disclose an asynchronous remote device, and therefore does not disclose a transceiver comprising a transmitter coupled to a processor for transmitting data to a synchronous remote device and the asynchronous remote device; a receiver coupled to the processor for receiving data from the synchronous remote device and the asynchronous remote device.

However, Bernstein discloses a similar system with an asynchronous remote device, and a transceiver comprising a transmitter (see Fig 2, element 206) coupled to a processor (Fig 2, element 204) for transmitting data to a synchronous remote device and the asynchronous remote device (see [0087]-[0091]); a receiver coupled to the processor for receiving data from the synchronous remote device and the asynchronous remote device (see Fig 2, element 206). It would have been obvious to one of ordinary skill in the art at the time the invention was made to combine the sensor, transceiver and synchronous remote device as disclosed by Brister with the transceiver for transmitting data do both a synchronous remote device and the asynchronous remote device as described by Bernstein to provide the predictable result of improving the Brister device by allowing further modes of data processing and transmission, such as by either (or both) synchronous, continuous, data transmission or asynchronous, "batched," data transmission.

Neither Brister nor Bernstein appears to disclose wherein a rate of exchanging data between the transceiver and either the synchronous or asynchronous remote device is dynamically changed in proportion to the signal produced by the sensor.

However, Say teaches a rate of exchanging data between the transceiver and either the synchronous or asynchronous remote device that is dynamically changed in proportion to the

signal produced by the sensor (see C43:1-20). It would have been obvious to one of ordinary skill in the art at the time the invention was made to combine the transceiver disclosed by Brister and Bernstein with the dynamic rate of exchanging data disclosed by Say to provide the predictable result of enhanced monitoring resolution during clinically relevant events, such as during hyper/hypoglycemia.

As to claim 2, Brister further discloses wherein the transceiver exchanges data with a plurality of remote devices in a network structure (see [0514]).

As to claim 9, Bernstein further discloses wherein the data exchanged in the asynchronous manner comprises at least one of: a blood glucose value; and a request for glucose history data (see [0087]-[0091]).

As to claim 10, Brister further discloses wherein the data exchanged between the transceiver and either the synchronous or asynchronous remote device comprises at least one of: device configuration data; communication link configuration data; adaptive communication configuration data; glucose history data; and calibration data ([0485]).

As to claim 11, Brister further discloses wherein the device configuration data comprises at least one of: a device identification; user information; and time information ([0484] – "sensor manufacture").

As to claim 12, Brister further discloses wherein the communication link configuration data comprises at least one of: a communication rate; frequency information; and frequency hopping configuration information (see [0477] --"In some embodiments, a second quartz crystal 154 provides the time base for the RF carrier frequency used for data transmissions from the RF transceiver.").

As to claim 14, Brister further discloses wherein the calibration data comprises at least one of: sensor initialization sequence and configuration information; and dynamic sensor initialization meters ([0488]).

As to claim 15, Brister further discloses wherein the processor calculates sensor glucose values using at least one of the signal received from the sensor, the data received either the synchronous or asynchronous remote device and the data stored in the memory ([0522] to[0523]).

As to claim 17, Brister further discloses wherein a glucose calculation algorithm for calculating the sensor glucose values is stored in the memory (see [0523] – "The sensor data point(s) can be smoothed (filtered) in certain embodiments using a filter, for example, a finite impulse response (FIR) or infinite impulse response (IIR) filter.").

As to claim 18, Brister further discloses wherein the processor stores the calculated sensor glucose values in the memory or transmits the calculated sensor glucose values to either the synchronous or asynchronous remote device through the transmitter ([0514]).

As to claim 20, Brister further discloses wherein the receiver receives calibration data from either the synchronous or asynchronous remote device and the processor stores the received calibration data in the memory. (see [0524] and[0529])– reference data can come from another monitor).

As to claim 21, Brister further discloses wherein the processor performs a calibration using at least one of the calibration data stored in the memory, the signal received from the sensor and the calculated glucose sensor values ([0529]).

As to claim 22, Brister further discloses wherein a calibration algorithm for performing the calibration is stored in the memory (see [0521]).

As to claim 23, Brister further discloses comprising a display for displaying information processed by the processor (Fig 15, element 170).

Claim 24 is rejected under pre-AIA 35 U.S.C. 103(a) as being unpatentable over Bernstein in view of US 2004/0176667 A1 to Mihai et al. (hereinafter "Mihai") and further in view of Say.

As to claim 24, Bernstein discloses

a transceiver housing detachably coupled to a sensor located on a body of a user, the sensor producing a signal indicative of a user characteristic (see entire document, especially[0032]);

a processor formed within the transceiver housing and in communication with the sensor for processing the signal produced by the sensor (see Fig 2, element 204);

a transmitter coupled to the processor for transmitting data to the synchronous remote device (Fig 2, element 206);

a receiver coupled to the processor for receiving data from at the synchronous remote device and the asynchronous remote device (Fig 2, element 206); and

a memory coupled to the processor for storing data (Fig 2, element 207), wherein the processor performs calculations using at least one of the signal produced by the sensor (see [0046]), the data received from at least one of the synchronous remote device or the asynchronous remote device and the data stored in the memory (see [0046]), the processor further performs at least one of storing the calculations in the memory (see [0046]) and

transmitting the calculations to at least one of the synchronous remote device or the asynchronous remote device through the transmitter (see [0087] to[0091]), but does not disclose wherein a rate of exchanging data between the transceiver and either the synchronous or asynchronous remote device is dynamically changed in proportion to the signal from the sensor, the transceiver further comprising means for notifying the user that either the synchronous or asynchronous remote device is beyond a certain distance from the transceiver.

Mihai discloses means for notifying the user that the at least one remote device is beyond a certain distance from the transceiver ([0439]). It would have been obvious to one of ordinary skill in the art to combine the transceiver disclosed by Brister with the alerting means disclosed by Mihai to notify the patient or another that a connection is not operable.

Say discloses a rate of exchanging data between the transceiver and either the synchronous or asynchronous remote device is dynamically changed in proportion to the signal from the sensor (see C41:1-20).). It would have been obvious to one of ordinary skill in the art at the time the invention was made to combine the transceiver disclosed by Bernstein with the dynamic rate of exchanging data disclosed by Say to provide the predictable result of enhanced monitoring resolution during clinically relevant events, such as during hyper/hypoglycemia.

Claims 4-5, 7 and 13 are rejected under 35 U.S.C. 103(a) as being unpatentable over Brister in view Bernstein and further in view of Say and further in view of US 2003/0130616 A1 to Steil et al. (hereinafter "Steil").

As to claims 4-5, Brister, Bernstein and Say fail to disclose wherein the transceiver wakes up from a sleep mode prior to exchanging data with either the synchronous or asynchronous remote device or further wherein the at least one remote device wakes up the transceiver.

However, Steil discloses a similar device wherein a transceiver wakes up from a sleep mode prior to exchanging data with either the synchronous or asynchronous remote device ([0328]) and further wherein either the synchronous or asynchronous remote device wakes up the transceiver ([0328]). It would have been obvious to one of ordinary skill in the art at the time the invention was made to combine the transceiver disclosed by Brister, Bernstein and Say with the sleep mode and external device waking disclosed by Steil to conserve battery.

As to claim 7, Brister, Bernstein and Say fail to disclose wherein the transceiver periodically wakes up independent of either the synchronous or asynchronous remote device. However, Steil discloses wherein the transceiver periodically wakes up independent of either the synchronous or asynchronous remote device ([0328]). It would have been obvious to one of ordinary skill in the art at the time the invention was made to combine the transceiver disclosed by Brister, Bernstein and Say with the periodic waking disclosed by Steil to conserve battery.

As to claim 13, Brister, Bernstein and Say fail to explicitly disclose wherein the glucose history data is exchanged according to a time interval. Steil discloses wherein the glucose history data is exchanged according to a time interval ([0328]). It would have been obvious to one of ordinary skill in the art to combine the sensor transceiver disclosed by Brister, Bernstein and Say with the time interval disclosed by Steil to save battery by only periodically sending glucose history data.

Claim 19 is rejected under 35 U.S.C. 103(a) as being unpatentable over Brister in view of Bernstein in view of Say and further in view of US 2007/0197878 A1 (Shklarski).

As to claim 19, Brister does not explicitly disclose wherein the calculated sensor glucose values are secured via an encryption scheme before transmission to the at least one remote

device. Shklarski teaches encrypting sensor data before transmission to an at least one remote device ([0089]). Therefore, it would have been obvious to one of ordinary skill in the art at the time the invention was made to combine the transceiver disclosed by Brister with the encryption disclosed by Shklarski to maintain patient confidentiality.

Claim 25 is rejected under 35 U.S.C. 103(a) as being unpatentable over Brister in view Bernstein and further in view of US 2007/0255126 A1 to Moberg et al. (hereinafter "Moberg").

As to claim 25, Brister, Bernstein and Say fail to explicitly disclose wherein a power for exchanging data between the transceiver and either the synchronous or asynchronous remote device is dynamically changed depending on a strength of a detected signal between the transceiver and the at least one remote device. Moberg discloses wherein a power for exchanging data between the transceiver and either the synchronous or asynchronous remote device is dynamically changed depending on a strength of a detected signal between the transceiver and the at least one remote device ([0143]). It would have been obvious to one of ordinary skill in the art to combine the transceiver disclosed by Brister, Bernstein and Say with the dynamic power disclosed by Moberg to conserve battery.

Claim 6 is rejected under 35 U.S.C. 103(a) as being unpatentable over Brister in view of Bernstein in view Say in view of Steil and further in view of US 2005/0043594 to Dinsmoor et al. (hereinafter "Dinsmoor").

As to claim 6, Brister and Bernstein and Say as modified by Steil discloses wake signal from an external device with an RF signal (see [0326]), but do not disclose an ultrasonic sensor for receiving an ultrasonic signal from either the synchronous or asynchronous remote device

when either the synchronous or asynchronous remote device transmits the ultrasonic signal to the transceiver to wake up the transceiver. Dinsmoor teaches that an RF sensor and signal can be substituted for an ultrasonic sensor for receiving an ultrasonic signal from either the synchronous or asynchronous remote device when the either the synchronous or asynchronous remote device transmits the ultrasonic signal to the transceiver to wake up the transceiver (see [0008]). Thus, it would have been obvious to one of ordinary skill in the art to provide the ultrasound sensor and ultrasound signal disclosed by Dinsmoor, since doing so would have been no more than a simple substitution of known elements to achieve predictable results.

Response to Arguments

Applicant's arguments with respect to claims 1-2, 4-7, 9-15 and 17-25 have been considered but are moot because the arguments do not apply to any of the references being used in the current rejection.

Conclusion

Applicant's amendment necessitated the new ground(s) of rejection presented in this Office action. Accordingly, **THIS ACTION IS MADE FINAL**. See MPEP § 706.07(a). Applicant is reminded of the extension of time policy as set forth in 37 CFR 1.136(a).

A shortened statutory period for reply to this final action is set to expire THREE MONTHS from the mailing date of this action. In the event a first reply is filed within TWO MONTHS of the mailing date of this final action and the advisory action is not mailed until after the end of the THREE-MONTH shortened statutory period, then the shortened statutory period will expire on the date the advisory action is mailed, and any extension fee pursuant to 37 CFR 1.136(a) will be calculated from the mailing date of the advisory action. In no event,

however, will the statutory period for reply expire later than SIX MONTHS from the date of this final action.

Any inquiry concerning this communication or earlier communications from the examiner should be directed to Eric Messersmith whose telephone number is (571)270-7081. The examiner can normally be reached on Mon-Fri 8:30 a.m. - 5:00 p.m.

If attempts to reach the examiner by telephone are unsuccessful, the examiner's supervisor, Patricia Mallari can be reached on (571) 272-4729. The fax phone number for the organization where this application or proceeding is assigned is 571-273-8300.

Information regarding the status of an application may be obtained from the Patent Application Information Retrieval (PAIR) system. Status information for published applications may be obtained from either Private PAIR or Public PAIR. Status information for unpublished applications is available through Private PAIR only. For more information about the PAIR system, see http://pair-direct.uspto.gov. Should you have questions on access to the Private PAIR system, contact the Electronic Business Center (EBC) at 866-217-9197 (toll-free). If you would like assistance from a USPTO Customer Service Representative or access to the automated information system, call 800-786-9199 (IN USA OR CANADA) or 571-272-1000.

/NAVIN NATNITHITHADHA/
Primary Examiner, Art Unit 3735

/Eric Messersmith/
Examiner, Art Unit 3735

Notice of References Cited	Application/Control No. 12/056,651	Applicant(s)/Patent Under Reexamination PATEL ET AL.	
	Examiner Eric Messersmith	Art Unit 3735	Page 1 of 1

U.S. PATENT DOCUMENTS

*		Document Number Country Code-Number-Kind Code	Date MM-YYYY	Name	Classification
*	A	US-6,175,752	01-2001	Say et al.	600/345
	B	US-			
	C	US-			
	D	US-			
	E	US-			
	F	US-			
	G	US-			
	H	US-			
	I	US-			
	J	US-			
	K	US-			
	L	US-			
	M	US-			

FOREIGN PATENT DOCUMENTS

*		Document Number Country Code-Number-Kind Code	Date MM-YYYY	Country	Name	Classification
	N					
	O					
	P					
	Q					
	R					
	S					
	T					

NON-PATENT DOCUMENTS

*		Include as applicable: Author, Title Date, Publisher, Edition or Volume, Pertinent Pages)
	U	
	V	
	W	
	X	

*A copy of this reference is not being furnished with this Office action. (See MPEP § 707.05(a).)
Dates in MM-YYYY format are publication dates. Classifications may be US or foreign.

Search Notes	Application/Control No.	Applicant(s)/Patent Under Reexamination
	12056651	PATEL ET AL.
	Examiner	**Art Unit**
	ERIC MESSERSMITH	3735

CPC- SEARCHED

Symbol	Date	Examiner

CPC COMBINATION SETS - SEARCHED

Symbol	Date	Examiner

US CLASSIFICATION SEARCHED

Class	Subclass	Date	Examiner
600	300, 365		

SEARCH NOTES

Search Notes	Date	Examiner
Inventor search (see EAST search history)	06/20/2011	EJM
EAST Search (see attached)	06/20/2011	EJM
STIC PLUS Search	12/12/2011	EJM
Updated Keyword Search in EAST	12/12/2011	EJM
Updated Seach	1/14/2014	EJM
Updated Search	8/5/2014	EJM

INTERFERENCE SEARCH

US Class/ CPC Symbol	US Subclass / CPC Group	Date	Examiner

EAST Search History

EAST Search History (Prior Art)

Ref #	Hits	Search Query	DBs	Default Operator	Plurals	Time Stamp
S1	6139	600/300,365.ccls.	US-PGPUB; USPAT; EPO; JPO; DERWENT	OR	ON	2011/06/17 09:58
S2	90	((HIMANSHU) near2 (PATEL)).INV.	US-PGPUB; USPAT	OR	ON	2011/06/17 10:04
S3	91	((WAYNE) near2 (MORGAN)).INV.	US-PGPUB; USPAT	OR	ON	2011/06/17 10:04
S4	23	((EDWARD) near2 (CHERNOFF)).INV.	US-PGPUB; USPAT	OR	ON	2011/06/17 10:04
S5	109	((JOHN) near2 (MASTROTOTARO)).INV.	US-PGPUB; USPAT	OR	ON	2011/06/17 10:04
S6	195	S2 or S3 or S4	US-PGPUB; USPAT; EPO; JPO; DERWENT	OR	ON	2011/06/17 10:04
S7	199	("20080060955" "7278983" "7722536" "7901394" "20040167464" "20060173260" "20070060869" "20070060870" "20070093786" "20070293843" "20090048501" "20090069744" "20090085768" "20090227855" "20100099972" "20100099973" "20100235439" "20110022025" "4545382" "6063637" "5212988" "5593852" "5667983" "5837199" "5965380" "6042751" "6083710" "6121009" "6150128" "6162611" "4445885" "4758323" "4788150" "4795707" "5551422" "5665215" "5670057" "5693577" "5695623" "5951521" "6027479" "6037178" "6061128" "6071739" "6077660" "6107083" "6221238" "6221238" "6287765" "6350431" "6462007" "6641533" "7677409" "20020002326" "20020049480" "20020058906" "20040073095" "20060253085" "20060258761" "20070156033" "20070244379" "20080021666" "20080039770" "20080076997" "20080083773" "20080094804" "20090033333" "20090061076" "20090177068" "20090178923" "20090267774"	US-PGPUB; USPAT; EPO; JPO; DERWENT	OR	ON	2011/06/17 10:04

		"20090267775" "20090270705" "20090287073" "20100053556" "20100063371" "20100147870" "20100331644" "5686888" "4268756" "4360729" "4517566" "4588978" "4604740" "5008678" "5197668" "5203497" "5245396" "5272476" "5313944" "5321273" "5483767" "5499292" "5504325" "5506410" "5511335" "5546695" "5589940" "5664035" "5666159").pn.				
S12	199	("20080060955" "7278983" "7722536" "7901394" "20040167464" "20060173260" "20070060869" "20070060870" "20070093786" "20070293843" "20090048501" "20090069744" "20090085768" "20090227855" "20100099972" "20100099973" "20100235439" "20110022025" "4545382" "6063637" "5212988" "5593852" "5667983" "5837199" "5965380" "6042751" "6083710" "6121009" "6150128" "6162611" "4445885" "4758323" "4788150" "4795707" "5551422" "5665215" "5670057" "5693577" "5695623" "5951521" "6027479" "6037178" "6061128" "6071739" "6077660" "6107083" "6221238" "6221238" "6287765" "6350431" "6462007" "6641533" "7677409" "20020002326" "20020049480" "20020058906" "20040073095" "20060253085" "20060258761" "20070156033" "20070244379" "20080021666" "20080039770" "20080076997" "20080083773" "20080094804" "20090033333" "20090061076" "20090177068" "20090178923" "20090267774" "20090267775" "20090270705" "20090287073" "20100053556" "20100063371" "20100147870" "20100331644" "5686888" "4268756" "4360729" "4517566" "4588978" "4604740" "5008678" "5197668" "5203497" "5245396" "5272476" "5313944" "5321273" "5483767" "5499292" "5504325" "5506410" "5511335" "5546695" "5589940" "5664035" "5666159").pn.	US-PGPUB; USPAT; EPO; JPO; DERWENT	OR	ON	2011/06/17 13:00
S13	8	S12 and dexcom	US-PGPUB; USPAT; EPO; JPO; DERWENT	OR	ON	2011/06/17 13:00
S14	823	brauker.in. or brister.in.	US-PGPUB; USPAT; EPO; JPO; DERWENT	OR	ON	2011/06/17 13:17
S15	573	S14 and glucose	US-PGPUB;	OR	ON	2011/06/17 13:17

			USPAT; EPO; JPO; DERWENT			
S16	4430	lord.in.	US-PGPUB; USPAT; EPO; JPO; DERWENT	OR	ON	2011/06/17 13:17
S17	178	S16 and glucose	US-PGPUB; USPAT; EPO; JPO; DERWENT	OR	ON	2011/06/17 13:17
S18	751	S17 or S15	US-PGPUB; USPAT; EPO; JPO; DERWENT	OR	ON	2011/06/17 13:18
S19	112	S18 and housing with (attach$6 detach$6 mate$2 mating$4 $2coupl$4)	US-PGPUB; USPAT; EPO; JPO; DERWENT	OR	ON	2011/06/17 13:19
S20	54	S19 and housing with (transmit$6 transceiv$4 wireless communicat$4)	US-PGPUB; USPAT; EPO; JPO; DERWENT	OR	ON	2011/06/17 13:20
S21	1815	600/365,347.ccls.	US-PGPUB; USPAT; EPO; JPO; DERWENT	OR	ON	2011/06/17 13:21
S22	20	S21 and (tranceiv$4 transmit$4 communicat$4 wireless$4 telemeter$4 telemetr$4) with wake	US-PGPUB; USPAT; EPO; JPO; DERWENT	OR	ON	2011/06/17 13:22
S23	3	S20 and wake	US-PGPUB; USPAT; EPO; JPO; DERWENT	OR	ON	2011/06/17 13:24
S24	565	S21 and (tranceiv$4 transmit$4 communicat$4 wireless$4 telemeter$4 telemetr$4) with (activat$4 power$4)	US-PGPUB; USPAT; EPO; JPO; DERWENT	OR	ON	2011/06/17 13:51
S25	9	S21 and (tranceiv$4 transmit$4 communicat$4 wireless$4 telemeter$4 telemetr$4) with (activat$4 power$4) with (two-way or two adj way or bi$4direction$4)	US-PGPUB; USPAT; EPO; JPO; DERWENT	OR	ON	2011/06/17 13:52
S26	7	S21 and (tranceiv$4 transmit$4 communicat$4 wireless$4 telemeter$4 telemetr$4) with (activat$4 power$4) with (two-way or two adj way or bi$4direction$4) and processor with (tranceiv$4 transmit$4 communicat$4 wireless$4 telemeter$4 telemetr$4)	US-PGPUB; USPAT; EPO; JPO; DERWENT	OR	ON	2011/06/17 13:53

S27	16	S18 and housing with (attach$6 detach$6 mate$2 mating$4 $2coupl$4) with ($5process$3)	US-PGPUB; USPAT; EPO; JPO; DERWENT	OR	ON	2011/06/17 13:55
S28	199	("20080060955" "7278983" "7722536" "7901394" "20040167464" "20060173260" "20070060869" "20070060870" "20070093786" "20070293843" "20090048501" "20090069744" "20090085768" "20090227855" "20100099972" "20100099973" "20100235439" "20110022025" "4545382" "6063637" "5212988" "5593852" "5667983" "5837199" "5965380" "6042751" "6083710" "6121009" "6150128" "6162611" "4445885" "4758323" "4788150" "4795707" "5551422" "5665215" "5670057" "5693577" "5695623" "5951521" "6027479" "6037178" "6061128" "6071739" "6077660" "6107083" "6221238" "6221238" "6287765" "6350431" "6462007" "6641533" "7677409" "20020002326" "20020049480" "20020058906" "20040073095" "20060253085" "20060258761" "20070156033" "20070244379" "20080021666" "20080039770" "20080076997" "20080083773" "20080094804" "20090033333" "20090061076" "20090177068" "20090178923" "20090267774" "20090267775" "20090270705" "20090287073" "20100053556" "20100063371" "20100147870" "20100331644" "5686888" "4268756" "4360729" "4517566" "4588978" "4604740" "5008678" "5197668" "5203497" "5245396" "5272476" "5313944" "5321273" "5483767" "5499292" "5504325" "5506410" "5511335" "5546695" "5589940" "5664035" "5666159").pn.	US-PGPUB; USPAT; EPO; JPO; DERWENT	OR	ON	2011/06/17 16:16
S29	28	S28 and $synchron$5	US-PGPUB; USPAT; EPO; JPO; DERWENT	OR	ON	2011/06/17 16:16
S30	823	brauker.in. or brister.in.	US-PGPUB; USPAT; EPO; JPO; DERWENT	OR	ON	2011/06/17 16:16
S31	823	S30	US-PGPUB; USPAT; EPO; JPO; DERWENT	OR	ON	2011/06/17 16:16
S32	3	S28 and wake with sleep adj mode	US-PGPUB;	OR	ON	2011/06/17 16:18

			USPAT; EPO; JPO; DERWENT			
S33	0	S30 and wake with sleep adj mode	US-PGPUB; USPAT; EPO; JPO; DERWENT	OR	ON	2011/06/17 16:19
S34	6139	600/300,365.ccls.	US-PGPUB; USPAT; EPO; JPO; DERWENT	OR	ON	2011/06/17 16:19
S35	21	S34 and wake with sleep adj mode	US-PGPUB; USPAT; EPO; JPO; DERWENT	OR	ON	2011/06/17 16:19
S36	3	S34 and wake with ultraso$6	US-PGPUB; USPAT; EPO; JPO; DERWENT	OR	ON	2011/06/17 16:19
S37	1783	A61b005/145.ipc.	US-PGPUB; USPAT; EPO; JPO; DERWENT	OR	ON	2011/06/17 16:20
S38	3	S36 and wake with ultraso$6	US-PGPUB; USPAT; EPO; JPO; DERWENT	OR	ON	2011/06/17 16:20
S39	3	S36 and (sleep activat$4) with ultraso$6	US-PGPUB; USPAT; EPO; JPO; DERWENT	OR	ON	2011/06/17 16:21
S40	312	(sleep activat$4) with mode with ultraso$6	US-PGPUB; USPAT; EPO; JPO; DERWENT	OR	ON	2011/06/17 16:21
S41	465	S31 and implant$4	US-PGPUB; USPAT; EPO; JPO; DERWENT	OR	ON	2011/06/17 16:21
S42	6	(sleep activat$4) with mode with ultraso$6 with wak$4	US-PGPUB; USPAT; EPO; JPO; DERWENT	OR	ON	2011/06/17 16:22
S43	0	S34 with power$4 with ultraso$6 with (battery or conserv$4)	US-PGPUB; USPAT; EPO; JPO; DERWENT	OR	ON	2011/06/17 16:23
S44	0	S34 with mode with ultraso$6	US-PGPUB;	OR	ON	2011/06/17 16:23

			USPAT; EPO; JPO; DERWENT			
S45	15	S34 and power$4 with ultraso$6 with (battery or conserv$4)	US-PGPUB; USPAT; EPO; JPO; DERWENT	OR	ON	2011/06/17 16:23
S46	5	S34 and periodic$4 with (conserv$4 save saving extend$4 length$4) with battery	US-PGPUB; USPAT; EPO; JPO; DERWENT	OR	ON	2011/06/17 16:32
S47	58	S34 and periodic$4 near7 battery	US-PGPUB; USPAT; EPO; JPO; DERWENT	OR	ON	2011/06/17 16:37
S48	265	S34 and periodic$4 near5 transmit$4	US-PGPUB; USPAT; EPO; JPO; DERWENT	OR	ON	2011/06/17 16:39
S49	31	S48 and asynchronous$4	US-PGPUB; USPAT; EPO; JPO; DERWENT	OR	ON	2011/06/17 16:43
S50	0	2006/0183985.pn.	US-PGPUB; USPAT; EPO; JPO; DERWENT	OR	ON	2011/06/17 17:08
S51	2	"20060183985".pn.	US-PGPUB; USPAT; EPO; JPO; DERWENT	OR	ON	2011/06/17 17:09
S52	1	S51 and transmit$4	US-PGPUB; USPAT; EPO; JPO; DERWENT	OR	ON	2011/06/17 17:09
S53	1	S51 and transmit$4 same request	US-PGPUB; USPAT; EPO; JPO; DERWENT	OR	ON	2011/06/17 17:12
S54	2	"20050043594".pn.	US-PGPUB; USPAT; EPO; JPO; DERWENT	OR	ON	2011/06/17 17:17
S55	0	S34 and asynchronous$ with expens$4	US-PGPUB; USPAT; EPO; JPO; DERWENT	OR	ON	2011/06/17 17:42
S56	281	S34 and asynchronous$	US-PGPUB;	OR	ON	2011/06/17 17:42

			USPAT; EPO; JPO; DERWENT			
S57	0	S34 and asynchronous$ with cheap$4	US-PGPUB; USPAT; EPO; JPO; DERWENT	OR	ON	2011/06/17 17:42
S58	61	S34 and asynchronous$ with data and glucose	US-PGPUB; USPAT; EPO; JPO; DERWENT	OR	ON	2011/06/17 17:42
S59	9	S34 and asynchronous$ with data and glucose and hopping	US-PGPUB; USPAT; EPO; JPO; DERWENT	OR	ON	2011/06/17 17:43
S60	8	S34 and asynchronous$ with data and glucose and scanning	US-PGPUB; USPAT; EPO; JPO; DERWENT	OR	ON	2011/06/17 17:43
S61	826	brauker.in. or brister.in.	US-PGPUB; USPAT; EPO; JPO; DERWENT	OR	ON	2011/06/20 11:37
S62	826	S61	US-PGPUB; USPAT; EPO; JPO; DERWENT	OR	ON	2011/06/20 11:37
S63	0	S62 and encrypt$4 near5 external	US-PGPUB; USPAT; EPO; JPO; DERWENT	OR	ON	2011/06/20 11:38
S64	0	S62 and encrypt$4 with external	US-PGPUB; USPAT; EPO; JPO; DERWENT	OR	ON	2011/06/20 11:38
S65	0	S62 and encrypt$4	US-PGPUB; USPAT; EPO; JPO; DERWENT	OR	ON	2011/06/20 11:38
S66	6139	600/300,365.ccls.	US-PGPUB; USPAT; EPO; JPO; DERWENT	OR	ON	2011/06/20 11:40
S67	6139	S66	US-PGPUB; USPAT; EPO; JPO; DERWENT	OR	ON	2011/06/20 11:40
S68	595	S67 and encrypt$4	US-PGPUB;	OR	ON	2011/06/20 11:40

			USPAT; EPO; JPO; DERWENT			
S69	30	S67 and encrypt$4 with external$4	US-PGPUB; USPAT; EPO; JPO; DERWENT	OR	ON	2011/06/20 11:40
S70	583	encrypt$4 with device and glucose	US-PGPUB; USPAT; EPO; JPO; DERWENT	OR	ON	2011/06/20 11:42
S71	182	S67 and encrypt$4 with device	US-PGPUB; USPAT; EPO; JPO; DERWENT	OR	ON	2011/06/20 11:42
S72	7	S67 and encrypt$4 with device same glucose	US-PGPUB; USPAT; EPO; JPO; DERWENT	OR	ON	2011/06/20 11:42
S73	53	S67 and encrypt$4 with device and glucose with data	US-PGPUB; USPAT; EPO; JPO; DERWENT	OR	ON	2011/06/20 11:46
S74	1815	600/365,347.ccls.	US-PGPUB; USPAT; EPO; JPO; DERWENT	OR	ON	2011/06/20 13:31
S75	542	S74 and proximity	US-PGPUB; USPAT; EPO; JPO; DERWENT	OR	ON	2011/06/20 13:31
S76	8	S74 and proximity with (alert$4 alarm$4 audibl$4 aud$4)	US-PGPUB; USPAT; EPO; JPO; DERWENT	OR	ON	2011/06/20 13:32
S77	37	S74 and bluetooth near5 range	US-PGPUB; USPAT; EPO; JPO; DERWENT	OR	ON	2011/06/20 13:34
S78	48	S74 and display$4 near5 connection	US-PGPUB; USPAT; EPO; JPO; DERWENT	OR	ON	2011/06/20 13:35
S79	90	S61 and out near2 range	US-PGPUB; USPAT; EPO; JPO; DERWENT	OR	ON	2011/06/20 13:37
S80	4	alarm with range with connection with bluetooth	US-PGPUB;	OR	ON	2011/06/20 13:38

			USPAT; EPO; JPO; DERWENT			
S81	44	alarm with range with bluetooth	US-PGPUB; USPAT; EPO; JPO; DERWENT	OR	ON	2011/06/20 13:38
S82	77	indicator near bluetooth	US-PGPUB; USPAT; EPO; JPO; DERWENT	OR	ON	2011/06/20 13:38
S83	2	S66 and signal near2 range near2 (display screen indicator)	US-PGPUB; USPAT; EPO; JPO; DERWENT	OR	ON	2011/06/20 13:40
S84	841	signal near2 range near2 (display screen indicator)	US-PGPUB; USPAT; EPO; JPO; DERWENT	OR	ON	2011/06/20 13:41
S85	85	S84 and "600"/$.ccls.	US-PGPUB; USPAT; EPO; JPO; DERWENT	OR	ON	2011/06/20 13:41
S86	30	signal near2 range near2 (display screen indicator) with (wireless connection)	US-PGPUB; USPAT; EPO; JPO; DERWENT	OR	ON	2011/06/20 13:42
S87	14624	signal near2 strength with (display screen indicator)	US-PGPUB; USPAT; EPO; JPO; DERWENT	OR	ON	2011/06/20 13:42
S88	316	S87 and "600"/$.ccls.	US-PGPUB; USPAT; EPO; JPO; DERWENT	OR	ON	2011/06/20 13:42
S89	6	S87 and 600/365.ccls.	US-PGPUB; USPAT; EPO; JPO; DERWENT	OR	ON	2011/06/20 13:43
S90	327	alert near5 signal near5 (weak or loss or lost)	US-PGPUB; USPAT; EPO; JPO; DERWENT	OR	ON	2011/06/20 13:44
S91	380	alert$ near5 signal near5 (weak or loss or lost)	US-PGPUB; USPAT; EPO; JPO; DERWENT	OR	ON	2011/06/20 13:44
S92	0	S91 and 600/365.ccls.	US-PGPUB;	OR	ON	2011/06/20 13:45

			USPAT; EPO; JPO; DERWENT			
S93	294	S66 and (alert$4 alarm$4 indicat$ beep$4) with outside with range	US-PGPUB; USPAT; EPO; JPO; DERWENT	OR	ON	2011/06/20 13:45
S94	24	S66 and (alert$4 alarm$4 indicat$ beep$4) with outside with range same wireless	US-PGPUB; USPAT; EPO; JPO; DERWENT	OR	ON	2011/06/20 13:45
S95	5	S66 and (dynamic$4 chang$4) with power$4 with (increas$ rais$4 greater) with signal	US-PGPUB; USPAT; EPO; JPO; DERWENT	OR	ON	2011/06/20 13:53
S96	12	S66 and (dynamic$4 chang$4) with power$4 with wireless	US-PGPUB; USPAT; EPO; JPO; DERWENT	OR	ON	2011/06/20 13:54
S97	2	"20060183985".pn.	US-PGPUB; USPAT; EPO; JPO; DERWENT	OR	ON	2011/12/14 13:39
S98	1	S97 and (adhes$6 adher$6 stick$4 tape)	US-PGPUB; USPAT; EPO; JPO; DERWENT	OR	ON	2011/12/14 13:39
S99	2273	600/300,365.ccls. and (adhes$6 adher$6 stick$4 tape)	US-PGPUB; USPAT; EPO; JPO; DERWENT	OR	ON	2011/12/14 17:02
S100	106	600/300,365.ccls. and (adhes$6 adher$6 stick$4 tape) with receiver	US-PGPUB; USPAT; EPO; JPO; DERWENT	OR	ON	2011/12/14 17:03
S101	68	600/300,365.ccls. and (adhes$6 adher$6 stick$4 tape) with receiver and glucose near2 sens$5	US-PGPUB; USPAT; EPO; JPO; DERWENT	OR	ON	2011/12/14 17:03
S102	1087	brauker.in. or brister.in.	US-PGPUB; USPAT; EPO; JPO; DERWENT	OR	ON	2014/01/09 19:33
S103	9476	600/300,365.ccls.	US-PGPUB; USPAT; EPO; JPO; DERWENT	OR	ON	2014/01/09 19:33
S104	3301	600/365,347.ccls.	US-PGPUB;	OR	ON	2014/01/09 19:33

			USPAT; EPO; JPO; DERWENT			
S105	867	S104 and proximity	US-PGPUB; USPAT; EPO; JPO; DERWENT	OR	ON	2014/01/09 19:33
S106	17	S104 and proximity with (alert$4 alarm$4 audibl$4 aud$4)	US-PGPUB; USPAT; EPO; JPO; DERWENT	OR	ON	2014/01/09 19:33
S107	124	S104 and bluetooth near5 range	US-PGPUB; USPAT; EPO; JPO; DERWENT	OR	ON	2014/01/09 19:33
S108	77	S104 and display$4 near5 connection	US-PGPUB; USPAT; EPO; JPO; DERWENT	OR	ON	2014/01/09 19:33
S109	138	S102 and out near2 range	US-PGPUB; USPAT; EPO; JPO; DERWENT	OR	ON	2014/01/09 19:33
S110	11	alarm with range with connection with bluetooth	US-PGPUB; USPAT; EPO; JPO; DERWENT	OR	ON	2014/01/09 19:33
S111	93	alarm with range with bluetooth	US-PGPUB; USPAT; EPO; JPO; DERWENT	OR	ON	2014/01/09 19:33
S112	320	indicator near bluetooth	US-PGPUB; USPAT; EPO; JPO; DERWENT	OR	ON	2014/01/09 19:33
S113	3	S103 and signal near2 range near2 (display screen indicator)	US-PGPUB; USPAT; EPO; JPO; DERWENT	OR	ON	2014/01/09 19:33
S114	1035	signal near2 range near2 (display screen indicator)	US-PGPUB; USPAT; EPO; JPO; DERWENT	OR	ON	2014/01/09 19:33
S115	2490	S105 S106 S107 S108 S109 S110 S111 S112 S113 S114	US-PGPUB; USPAT; EPO; JPO; DERWENT	OR	ON	2014/01/09 19:33
S116	0	S115 and mihai.inv.	US-PGPUB;	OR	ON	2014/01/09 19:34

			USPAT; EPO; JPO; DERWENT			
S117	0	S115 and "2004017667".pn.	US-PGPUB; USPAT; EPO; JPO; DERWENT	OR	ON	2014/01/09 19:34
S118	1	S103 and (alert$4 alarm$4 indicat$ beep$4) with outside with range and "20040176667".pn.	US-PGPUB; USPAT; EPO; JPO; DERWENT	OR	ON	2014/01/09 19:35
S119	2	"20070049984".pn.	US-PGPUB; USPAT; EPO; JPO; DERWENT	OR	ON	2014/01/10 10:32
S120	2	"6175752".pn.	US-PGPUB; USPAT; EPO; JPO; DERWENT	OR	ON	2014/01/12 14:16
S121	1	S120 and period$4 with data	US-PGPUB; USPAT; EPO; JPO; DERWENT	OR	ON	2014/01/12 14:16
S122	0	("20090085768").PN.	USPAT; USOCR	OR	OFF	2014/01/12 15:03
S123	1	("20090085768").PN.	US-PGPUB; USPAT; USOCR	OR	OFF	2014/01/12 15:03
S124	0	S123 and asynchronous	USPAT	OR	OFF	2014/01/12 15:04
S125	1	S123 and asynchronous	US-PGPUB; USPAT; USOCR	OR	OFF	2014/01/12 15:04
S126	1	S123 and asynchronous$4	US-PGPUB; USPAT; USOCR	OR	OFF	2014/01/12 15:05
S127	1	S123 and remote adj device	US-PGPUB; USPAT; USOCR	OR	OFF	2014/01/12 15:06
S128	1	"6175752".pn.	US-PGPUB; USPAT; USOCR	OR	OFF	2014/01/12 15:06
S129	0	S128 and asynchronous$4	US-PGPUB; USPAT; USOCR	OR	OFF	2014/01/12 15:06
S130	0	"6175752".pn. and wake	US-PGPUB; USPAT;	OR	OFF	2014/01/12 15:07

			USOCR			
S131	1	"6175752".pn. and awake$4	US-PGPUB; USPAT; USOCR	OR	OFF	2014/01/12 15:07
S132	0	"6175752".pn. and data with intermit$6	US-PGPUB; USPAT; USOCR	OR	OFF	2014/01/12 15:07
S133	0	"6175752".pn. and data with packet$4	US-PGPUB; USPAT; USOCR	OR	OFF	2014/01/12 15:07
S134	0	"6175752".pn. and data same packet$4	US-PGPUB; USPAT; USOCR	OR	OFF	2014/01/12 15:07
S135	1	"6175752".pn. and data with transmit$4	US-PGPUB; USPAT; USOCR	OR	OFF	2014/01/12 15:07
S136	0	"600"/$.ccls. and synchronous$4 with asynchonous$4	US-PGPUB; USPAT; USOCR	OR	OFF	2014/01/12 15:11
S137	1060	"600"/$.ccls. and synchronous$4 same asynchronous$4	US-PGPUB; USPAT; USOCR	OR	OFF	2014/01/12 15:12
S138	920	"600"/$.ccls. and synchronous$4 with asynchronous$4	US-PGPUB; USPAT; USOCR	OR	OFF	2014/01/12 15:12
S139	28	"600"/309,316,365.ccls. and synchronous$4 with asynchronous$4	US-PGPUB; USPAT; USOCR	OR	OFF	2014/01/12 15:12
S140	1	("20090076358").PN.	US-PGPUB; USPAT; USOCR	OR	OFF	2014/01/12 15:26
S141	1	"20030130616".pn.	US-PGPUB; USPAT; USOCR	OR	OFF	2014/01/12 16:36
S142	0	S141 and bluetooth	US-PGPUB; USPAT; USOCR	OR	OFF	2014/01/12 16:36
S143	152	reggiardo.inv.	US-PGPUB; USPAT; EPO; JPO; DERWENT	OR	ON	2014/01/13 11:36
S144	0	S143 and synchronous$4 same asynchronous$4	US-PGPUB; USPAT; EPO; JPO; DERWENT	OR	ON	2014/01/13 11:37

S145	0	S143 and synchronous$4	US-PGPUB; USPAT; EPO; JPO; DERWENT	OR	ON	2014/01/13 11:37
S146	9	S143 and asynchronous$4	US-PGPUB; USPAT; EPO; JPO; DERWENT	OR	ON	2014/01/13 11:37
S147	199145	"340"/$.ccls.	US-PGPUB; USPAT; EPO; JPO; DERWENT	OR	ON	2014/01/13 11:42
S148	1038	S147 and synchronous$4 with asynchronous$4	US-PGPUB; USPAT; EPO; JPO; DERWENT	OR	ON	2014/01/13 11:42
S149	14	S148 and glucose	US-PGPUB; USPAT; EPO; JPO; DERWENT	OR	ON	2014/01/13 11:42
S150	2	"20070223404".pn.	US-PGPUB; USPAT; EPO; JPO; DERWENT	OR	ON	2014/01/13 11:46
S151	2	"20070233521".pn.	US-PGPUB; USPAT; EPO; JPO; DERWENT	OR	ON	2014/01/13 11:47
S152	1	"600"/309,316,365.ccls. and synchronous$4 adj2 mode	US-PGPUB; USPAT; USOCR	OR	OFF	2014/01/13 12:52
S153	3	"600"/309,316,365.ccls. and asynchronous$4 adj2 mode	US-PGPUB; USPAT; USOCR	OR	OFF	2014/01/13 12:53
S154	187	"600"/$.ccls. and asynchronous$4 adj2 mode	US-PGPUB; USPAT; USOCR	OR	OFF	2014/01/13 12:54
S155	125	S154 and @ad<"20071002"	US-PGPUB; USPAT; USOCR	OR	OFF	2014/01/13 12:54
S156	122	"600"/$.ccls. and synchronous$4 adj2 mode	US-PGPUB; USPAT; USOCR	OR	OFF	2014/01/13 12:54
S157	35	S156 and S155	US-PGPUB; USPAT; USOCR	OR	OFF	2014/01/13 12:54

S158	1	"7336738".pn.	US-PGPUB; USPAT; USOCR	OR	OFF	2014/01/13 13:06
S159	19	("20020152054" | "20020181622" | "4393458" | "4884227" | "5579335" | "5717713" | "5920278" | "5953649" | "5974083" | "6681199" | "7062282").PN. OR ("7336738").URPN.	US-PGPUB; USPAT; USOCR	OR	OFF	2014/01/13 13:17
S160	689	h04B1/69.cpc.	US-PGPUB; USPAT; USOCR	OR	OFF	2014/01/13 13:21
S161	0	A61B$.ccls.	US-PGPUB; USPAT; USOCR	OR	OFF	2014/01/13 13:22
S162	254688	A61B$.cpc.	US-PGPUB; USPAT; USOCR	OR	OFF	2014/01/13 13:22
S163	3	S160 and S162	US-PGPUB; USPAT; USOCR	OR	OFF	2014/01/13 13:22
S164	720	375/240.28.ccls.	US-PGPUB; USPAT; USOCR	OR	OFF	2014/01/13 13:24
S165	38	S164 and asynchronous$4 same synchronous$4	US-PGPUB; USPAT; USOCR	OR	OFF	2014/01/13 13:24
S166	0	375/370.ccls. and "600"/$.ccls.	US-PGPUB; USPAT; USOCR	OR	OFF	2014/01/13 13:26
S167	130	375/370.ccls.	US-PGPUB; USPAT; USOCR	OR	OFF	2014/01/13 13:26
S168	1	"8279274".pn.	US-PGPUB; USPAT; USOCR	OR	OFF	2014/01/13 13:28
S169	11	("20040196364" | "20050004473" | "20070055099" | "4424532" | "5103308" | "5168246" | "5664045" | "5712624" | "6754280" | "7336738" | "7440765").PN. OR ("8279274").URPN.	US-PGPUB; USPAT; USOCR	OR	OFF	2014/01/13 13:28
S170	699	S148 and @ad<"20071002"	US-PGPUB; USPAT; USOCR	OR	OFF	2014/01/13 13:32
S171	327	S170 and real adj time	US-PGPUB; USPAT; USOCR	OR	OFF	2014/01/13 13:33
S172	74	("20040263354" | "20040097796" |	US-	OR	OFF	2014/01/13

		"7153289" | "20070135866" | "20060253300" | "20070118397" | "6287252" | "7294105" | "20020018478" | "6580700" | "20060026296" | "20040102683" | "7153263" | "20050071190" | "5319363" | "5558638" | "6847892" | "20040125776" | "6864803" | "7242907" | "20030133422" | "7821964" | "20020013518" | "20010044731" | "20050154271" | "20050251552" | "20090082635" | "20050119535" | "20060241392" | "6484221" | "6154675" | "20060293571" | "6728576" | "6285897" | "6443890" | "20050080403" | "7151765" | "5376070" | "20030207113" | "20040122353" | "5754111" | "20060238333" | "5689229" | "7327705" | "20050143671" | "20040167465" | "6544173" | "20070088521" | "20090081951" | "20050038680" | "20040203362" | "20060074462" | "6747556" | "20080154503" | "20030025599" | "20070255111" | "6385593" | "5898690" | "20060045134" | "7184449" | "20070223404" | "6438603" | "20070233521" | "6763269" | "7396330" | "20020055857" | "6418346" | "6442432" | "7647237" | "7002944" | "7164661" | "20070030847" | "7333514" | "6564104").PN.	PGPUB; USPAT; USOCR			13:37
S173	10	S172 and synchronous$4 same asynchronous$4	US-PGPUB; USPAT; USOCR	OR	OFF	2014/01/13 13:40
S174	1	"20100076280".pn.	US-PGPUB; USPAT; USOCR	OR	OFF	2014/01/13 15:15
S175	1	"20080319296".pn.	US-PGPUB; USPAT; USOCR	OR	OFF	2014/01/13 15:16
S176	0	simpson.inv. and sensitivity near5 interferent.clm.	US-PGPUB; USPAT; EPO; JPO; DERWENT	OR	ON	2014/01/14 15:55
S177	845	simpson.inv. and sensitivity withinterferent.clm.	US-PGPUB; USPAT; EPO; JPO; DERWENT	OR	ON	2014/01/14 15:55
S178	0	simpson.inv. and sensitivity with interferent.clm.	US-PGPUB; USPAT; EPO; JPO; DERWENT	OR	ON	2014/01/14 15:55

S179	3017	dexcom.as. abbott near2 diabetes.as.	US-PGPUB; USPAT; EPO; JPO; DERWENT	OR	ON	2014/08/04 15:33
S180	5	S179 and (transmission communcation data) near2 (rate baud) with (hypergly$6 hypogly$6)	US-PGPUB; USPAT; EPO; JPO; DERWENT	OR	ON	2014/08/04 15:34
S181	67	S179 and updat$4 with frequent$4 with glucose	US-PGPUB; USPAT; EPO; JPO; DERWENT	OR	ON	2014/08/04 15:35
S182	4640	600/345,347,365.ccls.	US-PGPUB; USPAT; EPO; JPO; DERWENT	OR	ON	2014/08/04 15:37
S183	0	S182 and transmission adj rate with (adjust$4 updat$4 increas$4 decreas$4 dynamic$4)	US-PGPUB; USPAT; EPO; JPO; DERWENT	OR	ON	2014/08/04 16:16
S184	141	S182 and transmission with (adjust$4 updat$4 increas$4 decreas$4 dynamic$4)	US-PGPUB; USPAT; EPO; JPO; DERWENT	OR	ON	2014/08/04 16:16
S185	6	S182 and transmission with (adjust$4 updat$4 increas$4 decreas$4 dynamic$4) with (concentration hypoglyc$6 hyperglyc$6 trend)	US-PGPUB; USPAT; EPO; JPO; DERWENT	OR	ON	2014/08/04 16:16
S186	68	data adj (exchang$4 communication transmission) with dynamic$4 same health	US-PGPUB; USPAT; EPO; JPO; DERWENT	OR	ON	2014/08/04 16:21
S187	1	data adj (exchang$4 communication transmission) near2 dynamic$4 same health	US-PGPUB; USPAT; EPO; JPO; DERWENT	OR	ON	2014/08/04 16:22
S188	1	data adj (exchang$4 communication transmission) near2 dynamic$4 same (glucose analyte)	US-PGPUB; USPAT; EPO; JPO; DERWENT	OR	ON	2014/08/04 16:22
S189	66	bernstein near2 daniel.inv.	US-PGPUB; USPAT; EPO; JPO; DERWENT	OR	ON	2014/08/04 16:23
S190	30	S189 and dynamic$4	US-PGPUB; USPAT; EPO; JPO; DERWENT	OR	ON	2014/08/04 16:24

S191	2	S190 and @ad<"20071002"	US-PGPUB; USPAT; EPO; JPO; DERWENT	OR	ON	2014/08/04 16:24
S192	26	S189 and rate same (glucose analyte)	US-PGPUB; USPAT; EPO; JPO; DERWENT	OR	ON	2014/08/04 16:24
S193	0	S192 and @ad<"20071002"	US-PGPUB; USPAT; EPO; JPO; DERWENT	OR	ON	2014/08/04 16:25
S194	76	bernstein.inv. and abbott.as.	US-PGPUB; USPAT; EPO; JPO; DERWENT	OR	ON	2014/08/04 16:25
S195	27	S194 and dynamic$4	US-PGPUB; USPAT; EPO; JPO; DERWENT	OR	ON	2014/08/04 16:25
S196	2	"6175752".pn.	US-PGPUB; USPAT; EPO; JPO; DERWENT	OR	ON	2014/08/04 16:27
S197	2	"20140046149".pn.	US-PGPUB; USPAT; EPO; JPO; DERWENT	OR	ON	2014/08/05 13:28
S198	2	"20080086042".pn.	US-PGPUB; USPAT; EPO; JPO; DERWENT	OR	ON	2014/08/05 13:28
S199	2	"20070151868".pn.	US-PGPUB; USPAT; EPO; JPO; DERWENT	OR	ON	2014/08/05 13:29

EAST Search History (Interference)

<This search history is empty>

8/5/2014 2:44:20 PM
C:\Users\emessersmith\Documents\EAST\Workspaces\12056651\12056651.wsp

Index of Claims	Application/Control No.	Applicant(s)/Patent Under Reexamination
	12056651	PATEL ET AL.
	Examiner	**Art Unit**
	ERIC MESSERSMITH	3735

✓	Rejected	-	Cancelled	N	Non-Elected	A	Appeal
=	Allowed	÷	Restricted	I	Interference	O	Objected

☐ Claims renumbered in the same order as presented by applicant ☐ CPA ☐ T.D. ☐ R.1.47

CLAIM		DATE								
Final	Original	06/20/2011	12/14/2011	01/14/2014	08/05/2014					
	1	✓	✓	✓	✓					
	2	✓	✓	✓	✓					
	3	✓	✓	-	-					
	4	✓	✓	✓	✓					
	5	✓	✓	✓	✓					
	6	✓	✓	✓	✓					
	7	✓	✓	✓	✓					
	8	✓	✓	-	-					
	9	✓	✓	✓	✓					
	10	✓	✓	✓	✓					
	11	✓	✓	✓	✓					
	12	✓	✓	✓	✓					
	13	✓	✓	✓	✓					
	14	✓	✓	✓	✓					
	15	✓	✓	✓	✓					
	16	✓	✓	✓	-					
	17	✓	✓	✓	✓					
	18	✓	✓	✓	✓					
	19	✓	✓	✓	✓					
	20	✓	✓	✓	✓					
	21	✓	✓	✓	✓					
	22	✓	✓	✓	✓					
	23	✓	✓	✓	✓					
	24	✓	✓	✓	✓					
	25	✓	✓	✓	✓					
	26	✓	✓	✓	-					
	27	✓	✓	✓	-					
	28	✓	✓	✓	-					
	29	✓	✓	✓	-					

IN THE UNITED STATES PATENT AND TRADEMARK OFFICE

In re Utility Application of: Himanshu Patel	)	Group Art Unit: 3735
Serial No.: 12/056,651	)	Examiner: MESSERSMITH, ERIC
Filed: March 27, 2008	)	Confirmation No.: 9941
For: GLUCOSE SENSOR TRANSCEIVER	)	Attorney Docket No.: P25732 US
	)	Date: April 15654, 2014

AMENDMENT

Commissioner for Patents
P.O. Box 1450
Alexandria, VA 22313-1450

Sir:

The present Amendment is filed on April 11, 2014 in response to the Non-Final Office Action mailed on January 31, 2014 for the above-identified application. Please enter and consider the following amendment and remarks.

Amendments to the Claims are reflected in the listing of claims which begins on page 2 of this paper. This listing of claims will replace all prior versions.

Remarks begin on page 8 of this paper.

AMENDMENTS TO THE CLAIMS:

The following is a complete listing of the claims.

1. (Currently amended) A telemetered characteristic sensor transceiver for exchanging data with a synchronous remote device and an asynchronous remote device, the transceiver comprising:

a transceiver housing detachably coupled to a sensor located on a body of a user, the sensor producing a signal indicative of a user characteristic, the sensor being affixed to the user with a single adhesive tape;

a processor formed within the transceiver housing and in communication with the sensor for processing the signal produced by the sensor;

a transmitter coupled to the processor for transmitting data to the synchronous remote device and the asynchronous remote device;

a receiver coupled to the processor for receiving data from the synchronous remote device and the asynchronous remote device; and

a memory coupled to the processor for storing data,

wherein a transceiver housing coupled to a sensor affixed to the user remains in a fixed position supported by the single adhesive tape, the processor performs calculations using at least one of the signal produced by the sensor, the data received from at least one of the synchronous remote device or the asynchronous remote device and the data stored in the memory, the processor further performs at least one of storing the calculations in the memory and transmitting the calculations to at least one of the synchronous remote device or the asynchronous remote device through the transmitter, wherein a rate of exchanging data between the transceiver and either the synchronous or asynchronous remote device is dynamically changed in proportion to the signal

produced by the sensor.

2. (Original) The transceiver of claim 1, wherein the transceiver exchanges data with a plurality of remote devices in a network structure.

3. (Canceled)

4. (Currently amended) The transceiver of claim 1, wherein the transceiver wakes up from a sleep mode prior to exchanging data with either the ~~at least one~~ synchronous or asynchronous remote device.

5. (Currently amended) The transceiver of claim 4, wherein either the ~~at least one~~ synchronous or asynchronous remote device wakes up the transceiver.

6. (Currently amended) The transceiver of claim 5, further comprising an ultrasonic sensor for receiving an ultrasonic signal from either the ~~at least one~~ synchronous or asynchronous remote device when either the synchronous or asynchronous ~~at least one~~ remote device transmits the ultrasonic signal to the transceiver to wake up the transceiver.

7. (Currently amended) The transceiver of claim 4, wherein the transceiver periodically wakes up independent of either the synchronous or asynchronous ~~at least one~~ remote device.

8. (Canceled)

9. (Currently amended) The transceiver of claim [[8]] 1, wherein the data exchanged in the asynchronous manner comprises at least one of: a blood glucose value; and a request for glucose history data.

10. (Currently amended) The transceiver of claim 1, wherein the data exchanged between the transceiver and either the synchronous or asynchronous ~~at least one~~ remote device comprises at least one of: device configuration data; communication link configuration data; adaptive communication configuration data; glucose history data; and calibration data.

11. (Original) The transceiver of claim 10, wherein the device configuration data comprises at least one of: a device identification; user information; and time information.

12. (Original) The transceiver of claim 10, wherein the communication link configuration data comprises at least one of: a communication rate; frequency information; and frequency hopping configuration information.

13. (Original) The transceiver of claim 10, wherein the glucose history data is exchanged according to a time interval.

14. (Original) The transceiver of claim 10, wherein the calibration data comprises at least one of: sensor initialization sequence and configuration information; and dynamic sensor initialization parameters.

15. (Currently amended) The transceiver of claim 1, wherein the processor calculates sensor glucose values using at least one of the signal received from the sensor, the data received from either the synchronous or asynchronous ~~at least one~~ remote device and the data stored in the memory.

16. (Canceled)

17. (Original) The transceiver of claim 15, wherein a glucose calculation algorithm for calculating the sensor glucose values is stored in the memory.

18. (Currently amended) The transceiver of claim 15, wherein the processor stores the calculated sensor glucose values in the memory or transmits the calculated sensor glucose values to either the synchronous or asynchronous ~~at least one~~ remote device through the transmitter.

19. (Currently amended) The transceiver of claim 18, wherein the calculated sensor glucose values are secured via an encryption scheme before transmission to either the synchronous or asynchronous ~~at least one~~ remote device.

20. (Currently amended) The transceiver of claim 15, wherein the receiver receives calibration data from either the synchronous or asynchronous ~~at least one~~ remote device and the processor stores the received calibration data in the memory.

21. (Original) The transceiver of claim 20, wherein the processor performs a calibration using at least one of the calibration data stored in the memory, the signal received from the sensor and the calculated glucose sensor values.

22. (Original) The transceiver of claim 21, wherein a calibration algorithm for performing the calibration is stored in the memory.

23. (Original) The transceiver of claim 1, further comprising a display for displaying information processed by the processor.

24. (Currently amended) A telemetered characteristic sensor transceiver for exchanging data with a synchronous remote device and an asynchronous remote device, the transceiver comprising:

a transceiver housing detachably coupled to a sensor located on a body of a user, the sensor producing a signal indicative of a user characteristic;

a processor formed within the transceiver housing and in communication with the sensor for processing the signal produced by the sensor;

a transmitter coupled to the processor for transmitting data to the synchronous remote device and the asynchronous remote device;

a receiver coupled to the processor for receiving data from at the synchronous remote device and the asynchronous remote device; and

a memory coupled to the processor for storing data,

wherein the processor performs calculations using at least one of the signal produced by the sensor, the data received from at least one of the synchronous remote device or the asynchronous remote device and the data stored in the memory, the processor further performs at least one of storing the calculations in the memory and transmitting the calculations to at least one of the synchronous remote device or the asynchronous remote device through the transmitter, wherein a rate of exchanging data between the transceiver and either the synchronous or asynchronous remote device is dynamically changed in proportion to the signal from the sensor, the transceiver further comprising means for notifying the user that either the synchronous or asynchronous ~~at least one~~ remote device is beyond a certain distance from the transceiver.

25. (Currently amended) The transceiver of claim 1, wherein a power for exchanging data between the transceiver and the at least one remote device is dynamically changed depending on a strength of a detected signal between either the synchronous or asynchronous ~~at least one~~ remote device; and an electrical connection between the transceiver and a battery charger.

REMARKS

Applicants thank the Examiner for the careful review of the Response and Non-Final Office Action mailed on January 31, 2014. It is submitted that after entry of the present amendments, the application is in condition for allowance over the references cited in the Office Action. The amendments to the claim do not introduce new subject matter because support for the amendments is found in the as-filed application. Reconsideration of all of the pending claims in view of the amendment and remarks is respectfully requested.

Rejections based on 35 U.S.C. § 112

Claims 4-22, 24, 27, and 29 were rejected under 35 U.S.C. § 112(b) or 35 U.S.C § 112 (pre-AIA), second paragraph.

Applicants believe entry of the present amendment brings the claims within compliance of 35 U.S.C. § 112(b) or 35 U.S.C. § (pre-AIA), second paragraph. Accordingly, Applicants respectfully request withdrawal of the rejection based on 35. U.S.C. § 112.

Rejections based on 35 U.S.C. § 103

Independent claims 1 and 24 were rejected under pre-AIA 35 U.S.C. § 103(a) as being unpatentable over U.S. Patent Publication No. 2006/0183985 by Brister et al. (hereinafter, "Brister") in view of U.S. Patent Publication No. 2008/0319296 by Bernstein et al. (hereinafter, "Bernstein").

Applicants submit that after entry of the present amendment independent claims 1 and 24

are patentably distinguishable from the combination of Brister and Bernstein. Applicants have amended claim 1 to further define the claimed subject matter. Specifically, amended claim 1 recites that a rate of exchanging data between the transceiver and either the synchronous or asynchronous remote device is dynamically changed in proportion to the signal produced by the sensor. Support for the amendment is found at least in paragraph [0088] of the published application.

Accordingly, the amended claimed subject matter allows the communication rate to be increased when a blood glucose value is beyond or outside of a normal range. Similarly, the communication rate may be increased if there is a steep rise or drop in blood glucose value. The Office cites paragraph [0530] from Brister which is explicitly dealing with "requesting additional reference analyte data". Applicants submit there are at least two problems comparing the amended claims with the cited portions of Brister. First, as discussed in paragraph [0529] of Brister, the "reference data" is gathered from a completely separate monitoring system. Second, Brister does not contemplate or suggest changing the data rate or sample rate *in proportion* to the signal produced by the sensor.

Applicants submit that because the cited portions of Brister and Bernstein contemplate discrete samplings rather than dynamically changing the data rate *in proportion* to the signal produced by the sensor the amended claimed subject matter is patentably distinguishable from the combination of Brister and Bernstein. Therefore, Applicants respectfully request withdrawal of the 35 U.S.C. § 103(a) rejection be withdrawn.

Dependent claims 2, 10, 11, 12, 14, 15, 16, 17, 18, 20, 21, 22, 23, 27, 28 and 29 were rejected under 35 U.S.C. § 103(a) as being unpatentable over Brister and Bernstein. Applicants

submit that dependent claims 2, 10-12, 14, 15, 17, 18, 20-23, 27-29 are allowable for at least the same reason the independent claim from which they depend is allowable.

Dependent claim 24 was rejected under pre-AIA 35 U.S.C. § 103(a) as being unpatentable over Bernstein in view of U.S. Patent Publication no. 2004/0176667 by Mihai et al. (hereinafter "Mihai").

Applicants submit that Mihai, cited as disclosing means to notify the user that the at least one remote device is beyond a certain distance from the transceiver fails to cure the previously discussed shortcomings of Bernstein. Specifically, Applicants submit that the combination of Bernstein and Mihai fails to contemplate or discuss that a rate of exchanging data between the transceiver and either the synchronous or asynchronous remote device is dynamically changed in proportion to the signal produced by the sensor.

Dependent claims 4-5, 7, and 13 were rejected under 35 U.S.C. § 103(a) as being unpatentable over Brister in view of Bernstein and further in view of U.S. Patent Publication No. 2003/0130616 by Steil et al. (hereinafter, "Steil").

Applicants contend that as amended, independent claim 1 and subsequently dependent claims 4-5, 7 and 13 are patentably distinguishable from the combination of Brister, Bernstein and Steil.

Dependent claim 19 was rejected under 35 U.S.C. § 103(a) as being unpatentable over Brister in view of Bernstein and further in view of U.S. Patent Publication no. 2007/0197878 by Shklarski (hereinafter "Shklarksi").

Applicants submit that after entry of the present amendment dependent claim 19 is patentably distinguishable from the combination of Brister and Shklarski for at least the reasons discussed above regarding independent claim 1 from which claim 19 depends.

Dependent claims 25 and 26 were rejected under 35 U.S.C. § 103(a) as being unpatentable over Brister in view of Bernstein and further in view of U.S. Patent Publication no. 2007/0255126 by Moberg et al. (hereinafter "Moberg").

Applicants submit that after entry of the present amendment dependent claims 25 and 26 are patentably distinguishable from the combination of Brister and Moberg for at least the reasons discussed above regarding independent claim 1 from which claims 25 and 26 depend.

Dependent claim 6 was rejected under 35 U.S.C. § 103(a) as being unpatentable over Brister in view of Bernstein in view of Steil and further in view of U.S. Patent Publication no. 2005/0043594 by Dinsmoor et al. (hereinafter "Dinsmoor").

Applicants submit that after entry of the present amendment dependent claim 6 is patentably distinguishable from the combination of Brister, Steil, and Dinsmoor for at least the reasons discussed above regarding independent claim 1 from which claim 6 depends.

If for any reason the Examiner finds the application other than in condition for allowance, the Examiner is invited to call the undersigned attorney at (818) 576-4330 should the Examiner believe a telephone interview would advance the prosecution of the application.

The Commissioner is hereby authorized to charge any additional fees which may be required regarding this application under 37 C.F.R. §§ 1.16-1.17, or credit any overpayment, to Deposit Account No. 50-0621. Should no proper payment be enclosed herewith, as by a check or credit card payment form being in the wrong amount, unsigned, post-dated, otherwise improper or informal or even entirely missing, the Commissioner is authorized to charge the unpaid amount to Deposit Account No. 50-0621. If any extensions of time are needed for timely acceptance of papers submitted herewith, Applicant hereby petitions for such extensions under 37 C.F.R. § 1.136 and authorizes payment of any such extensions fees to Deposit Account No. 50-0621.

Respectfully submitted,

Dated: April 15, 2014

By: /Konrad Chan/

Konrad K. Chan
Reg. No. 57,857

Medtronic MiniMed, Inc.
18000 Devonshire Street
Northridge, CA 91325-1219
Telephone: (818) 576-4330
Facsimile: (818) 576-6202

Electronic Acknowledgement Receipt

EFS ID:	18770830
Application Number:	12056651
International Application Number:	
Confirmation Number:	9941
Title of Invention:	GLUCOSE SENSOR TRANSCEIVER
First Named Inventor/Applicant Name:	Himanshu Patel
Customer Number:	23608
Filer:	Konrad K. Chan
Filer Authorized By:	
Attorney Docket Number:	P25732 US
Receipt Date:	15-APR-2014
Filing Date:	27-MAR-2008
Time Stamp:	17:09:44
Application Type:	Utility under 35 USC 111(a)

Payment information:

Submitted with Payment	no

File Listing:

Document Number	Document Description	File Name	File Size(Bytes)/ Message Digest	Multi Part /.zip	Pages (if appl.)
1		P25732_US_2014-04-15_Response_to_OA.pdf	108883 2b32ef70883a459c5c0080f5ec71f8322446c1ae	yes	12

	Multipart Description/PDF files in .zip description		
	Document Description	**Start**	**End**
	Amendment/Req. Reconsideration-After Non-Final Reject	1	1
	Claims	2	7
	Applicant Arguments/Remarks Made in an Amendment	8	12

Warnings:	
Information:	
Total Files Size (in bytes):	108883

This Acknowledgement Receipt evidences receipt on the noted date by the USPTO of the indicated documents, characterized by the applicant, and including page counts, where applicable. It serves as evidence of receipt similar to a Post Card, as described in MPEP 503.

<u>New Applications Under 35 U.S.C. 111</u>
If a new application is being filed and the application includes the necessary components for a filing date (see 37 CFR 1.53(b)-(d) and MPEP 506), a Filing Receipt (37 CFR 1.54) will be issued in due course and the date shown on this Acknowledgement Receipt will establish the filing date of the application.

<u>National Stage of an International Application under 35 U.S.C. 371</u>
If a timely submission to enter the national stage of an international application is compliant with the conditions of 35 U.S.C. 371 and other applicable requirements a Form PCT/DO/EO/903 indicating acceptance of the application as a national stage submission under 35 U.S.C. 371 will be issued in addition to the Filing Receipt, in due course.

<u>New International Application Filed with the USPTO as a Receiving Office</u>
If a new international application is being filed and the international application includes the necessary components for an international filing date (see PCT Article 11 and MPEP 1810), a Notification of the International Application Number and of the International Filing Date (Form PCT/RO/105) will be issued in due course, subject to prescriptions concerning national security, and the date shown on this Acknowledgement Receipt will establish the international filing date of the application.

PTO/SB/06 (09-11)
Approved for use through 1/31/2014. OMB 0651-0032
U.S. Patent and Trademark Office; U.S. DEPARTMENT OF COMMERCE
Under the Paperwork Reduction Act of 1995, no persons are required to respond to a collection of information unless it displays a valid OMB control number.

PATENT APPLICATION FEE DETERMINATION RECORD

Substitute for Form PTO-875

Application or Docket Number	Filing Date	
12/056,651	03/27/2008	☒ To be Mailed

ENTITY: ☒ LARGE ☐ SMALL ☐ MICRO

APPLICATION AS FILED – PART I

FOR	(Column 1) NUMBER FILED	(Column 2) NUMBER EXTRA	RATE ($)	FEE ($)
☐ BASIC FEE (37 CFR 1.16(a), (b), or (c))	N/A	N/A	N/A	
☐ SEARCH FEE (37 CFR 1.16(k), (i), or (m))	N/A	N/A	N/A	
☐ EXAMINATION FEE (37 CFR 1.16(o), (p), or (q))	N/A	N/A	N/A	
TOTAL CLAIMS (37 CFR 1.16(i))	minus 20 =	*	x $ =	
INDEPENDENT CLAIMS (37 CFR 1.16(h))	minus 3 =	*	x $ =	
☐ APPLICATION SIZE FEE (37 CFR 1.16(s))	If the specification and drawings exceed 100 sheets of paper, the application size fee due is $310 ($155 for small entity) for each additional 50 sheets or fraction thereof. See 35 U.S.C. 41(a)(1)(G) and 37 CFR 1.16(s).			
☐ MULTIPLE DEPENDENT CLAIM PRESENT (37 CFR 1.16(j))				
* If the difference in column 1 is less than zero, enter "0" in column 2.			TOTAL	

APPLICATION AS AMENDED – PART II

AMENDMENT

04/15/2014	(Column 1) CLAIMS REMAINING AFTER AMENDMENT		(Column 2) HIGHEST NUMBER PREVIOUSLY PAID FOR	(Column 3) PRESENT EXTRA	RATE ($)	ADDITIONAL FEE ($)
Total (37 CFR 1.16(i))	* 22	Minus	** 29	= 0	x $80 =	0
Independent (37 CFR 1.16(h))	* 2	Minus	***3	= 0	x $420 =	0
☐ Application Size Fee (37 CFR 1.16(s))						
☐ FIRST PRESENTATION OF MULTIPLE DEPENDENT CLAIM (37 CFR 1.16(j))						
					TOTAL ADD'L FEE	0

AMENDMENT

	(Column 1) CLAIMS REMAINING AFTER AMENDMENT		(Column 2) HIGHEST NUMBER PREVIOUSLY PAID FOR	(Column 3) PRESENT EXTRA	RATE ($)	ADDITIONAL FEE ($)
Total (37 CFR 1.16(i))	*	Minus	**	=	x $ =	
Independent (37 CFR 1.16(h))	*	Minus	***	=	x $ =	
☐ Application Size Fee (37 CFR 1.16(s))						
☐ FIRST PRESENTATION OF MULTIPLE DEPENDENT CLAIM (37 CFR 1.16(j))						
					TOTAL ADD'L FEE	

* If the entry in column 1 is less than the entry in column 2, write "0" in column 3.
** If the "Highest Number Previously Paid For" IN THIS SPACE is less than 20, enter "20".
*** If the "Highest Number Previously Paid For" IN THIS SPACE is less than 3, enter "3".
The "Highest Number Previously Paid For" (Total or Independent) is the highest number found in the appropriate box in column 1.

LIE
/LISA THOMAS/

This collection of information is required by 37 CFR 1.16. The information is required to obtain or retain a benefit by the public which is to file (and by the USPTO to process) an application. Confidentiality is governed by 35 U.S.C. 122 and 37 CFR 1.14. This collection is estimated to take 12 minutes to complete, including gathering, preparing, and submitting the completed application form to the USPTO. Time will vary depending upon the individual case. Any comments on the amount of time you require to complete this form and/or suggestions for reducing this burden, should be sent to the Chief Information Officer, U.S. Patent and Trademark Office, U.S. Department of Commerce, P.O. Box 1450, Alexandria, VA 22313-1450. DO NOT SEND FEES OR COMPLETED FORMS TO THIS ADDRESS. **SEND TO: Commissioner for Patents, P.O. Box 1450, Alexandria, VA 22313-1450.**
If you need assistance in completing the form, call 1-800-PTO-9199 and select option 2.

UNITED STATES PATENT AND TRADEMARK OFFICE

UNITED STATES DEPARTMENT OF COMMERCE
United States Patent and Trademark Office
Address: COMMISSIONER FOR PATENTS
P.O. Box 1450
Alexandria, Virginia 22313-1450
www.uspto.gov

APPLICATION NO.	FILING DATE	FIRST NAMED INVENTOR	ATTORNEY DOCKET NO.	CONFIRMATION NO.
12/056,651	03/27/2008	Himanshu Patel	P25732 US	9941

23608 7590 01/31/2014
MEDTRONIC MINIMED, INC.
18000 Devonshire Street
Northridge, CA 91325-1219

EXAMINER
MESSERSMITH, ERIC J

ART UNIT	PAPER NUMBER
3735	

NOTIFICATION DATE	DELIVERY MODE
01/31/2014	ELECTRONIC

Please find below and/or attached an Office communication concerning this application or proceeding.

The time period for reply, if any, is set in the attached communication.

Notice of the Office communication was sent electronically on above-indicated "Notification Date" to the following e-mail address(es):

medtronic_diabetes_docketing@cardinal-ip.com

Office Action Summary	Application No. 12/056,651	Applicant(s) PATEL ET AL.	
	Examiner Eric Messersmith	Art Unit 3735	AIA (First Inventor to File) Status No

-- The MAILING DATE of this communication appears on the cover sheet with the correspondence address --

Period for Reply

A SHORTENED STATUTORY PERIOD FOR REPLY IS SET TO EXPIRE 3 MONTHS FROM THE MAILING DATE OF THIS COMMUNICATION.

- Extensions of time may be available under the provisions of 37 CFR 1.136(a). In no event, however, may a reply be timely filed after SIX (6) MONTHS from the mailing date of this communication.
- If NO period for reply is specified above, the maximum statutory period will apply and will expire SIX (6) MONTHS from the mailing date of this communication.
- Failure to reply within the set or extended period for reply will, by statute, cause the application to become ABANDONED (35 U.S.C. § 133). Any reply received by the Office later than three months after the mailing date of this communication, even if timely filed, may reduce any earned patent term adjustment. See 37 CFR 1.704(b).

Status

1)☒ Responsive to communication(s) filed on 3/21/2012.

☐ A declaration(s)/affidavit(s) under **37 CFR 1.130(b)** was/were filed on _____.

2a)☐ This action is **FINAL**. 2b)☒ This action is non-final.

3)☐ An election was made by the applicant in response to a restriction requirement set forth during the interview on _____; the restriction requirement and election have been incorporated into this action.

4)☐ Since this application is in condition for allowance except for formal matters, prosecution as to the merits is closed in accordance with the practice under *Ex parte Quayle*, 1935 C.D. 11, 453 O.G. 213.

Disposition of Claims*

5)☒ Claim(s) 1,2,4-7 and 9-29 is/are pending in the application.

5a) Of the above claim(s) _____ is/are withdrawn from consideration.

6)☐ Claim(s) _____ is/are allowed.

7)☒ Claim(s) 1,2,4-7 and 9-29 is/are rejected.

8)☐ Claim(s) _____ is/are objected to.

9)☐ Claim(s) _____ are subject to restriction and/or election requirement.

* If any claims have been determined allowable, you may be eligible to benefit from the **Patent Prosecution Highway** program at a participating intellectual property office for the corresponding application. For more information, please see http://www.uspto.gov/patents/init_events/pph/index.jsp or send an inquiry to PPHfeedback@uspto.gov.

Application Papers

10)☐ The specification is objected to by the Examiner.

11)☒ The drawing(s) filed on 3/27/2008 is/are: a)☒ accepted or b)☐ objected to by the Examiner.

Applicant may not request that any objection to the drawing(s) be held in abeyance. See 37 CFR 1.85(a).

Replacement drawing sheet(s) including the correction is required if the drawing(s) is objected to. See 37 CFR 1.121(d).

Priority under 35 U.S.C. § 119

12)☐ Acknowledgment is made of a claim for foreign priority under 35 U.S.C. § 119(a)-(d) or (f).

Certified copies:

a)☐ All b)☐ Some** c)☐ None of the:

1.☐ Certified copies of the priority documents have been received.

2.☐ Certified copies of the priority documents have been received in Application No. _____.

3.☐ Copies of the certified copies of the priority documents have been received in this National Stage application from the International Bureau (PCT Rule 17.2(a)).

** See the attached detailed Office action for a list of the certified copies not received.

Attachment(s)

1) ☒ Notice of References Cited (PTO-892)

2) ☐ Information Disclosure Statement(s) (PTO/SB/08a and/or PTO/SB/08b) Paper No(s)/Mail Date _____.

3) ☐ Interview Summary (PTO-413) Paper No(s)/Mail Date. _____ .

4) ☐ Other: _____.

The present application is being examined under the pre-AIA first to invent provisions.

DETAILED ACTION

Claim Rejections - 35 USC § 112

The following is a quotation of 35 U.S.C. 112(b):
(b) CONCLUSION.—The specification shall conclude with one or more claims particularly pointing out and distinctly claiming the subject matter which the inventor or a joint inventor regards as the invention.

The following is a quotation of 35 U.S.C. 112 (pre-AIA), second graph:
The specification shall conclude with one or more claims particularly pointing out and distinctly claiming the subject matter which the applicant regards as his invention.

Claims 4-22, 24, 27 and 29 are rejected under 35 U.S.C. 112(b) or 35 U.S.C. 112 (pre-AIA), second graph, as being indefinite for failing to particularly point out and distinctly claim the subject matter which the inventor or a joint inventor, or for pre-AIA the applicant regards as the invention.

As to claim 9, this claim is based on a cancelled claim and is therefore unclear. It is not treated further on the merits.

As to claims 4-22, 24, 27 and 29, these claims refer to “the at least one remote device." However, claim 1 refers to "a synchronous remote device” and “an asynchronous remote device.” It is unclear whether the claim limitations found in claims 4-22, 24, 27 and 29 apply to both the synchronous remote device and the asynchronous remote device referred to in claim 1 (or one or the other). It is understood as applying to either one of the synchronous remote device and the asynchronous remote device.

Claim Rejections - 35 USC § 103

The following is a quotation of pre-AIA 35 U.S.C. 103(a) which forms the basis for all obviousness rejections set forth in this Office action:

> (a) A patent may not be obtained though the invention is not identically disclosed or described as set forth in section 102 of this title, if the differences between the subject matter sought to be patented and the prior art are such that the subject matter as a whole would have been obvious at the time the invention was made to a person having ordinary skill in the art to which said subject matter pertains. Patentability shall not be negatived by the manner in which the invention was made.

The factual inquiries set forth in *Graham v. John Deere Co.*, 383 U.S. 1, 148 USPQ 459 (1966), that are applied for establishing a background for determining obviousness under pre-AIA 35 U.S.C. 103(a) are summarized as follows:

1. Determining the scope and contents of the prior art.

2. Ascertaining the differences between the prior art and the claims at issue.

3. Resolving the level of ordinary skill in the pertinent art.

4. Considering objective evidence present in the application indicating obviousness or nonobviousness.

Claims 1- are rejected under pre-AIA 35 U.S.C. 103(a) as being unpatentable over US 2006/083985 A1 to Brister et al. ("Brister") in view of Bernstein.

As to claim 1, Brister discloses

a telemetered characteristic sensor transceiver for exchanging data with a synchronous remote device :

a transceiver housing detachably coupled to a sensor located on a body of a user, the sensor producing a signal indicative of a user characteristic ([0494]; Fig 14A, element 148), the sensor being affixed to the user with a single adhesive tape (see [0271]; Fig 14B, element 9);

a processor formed within the transceiver housing and in communication with the sensor for processing the signal produced by the sensor (see Fig 14A, element 138);

a transmitter coupled to the processor for transmitting data to the synchronous remote device (see [0477]; Fig 14A, element 148);

a receiver coupled to the processor for receiving data from the synchronous remote device (see [0477]; Fig 14A, element 148); and

a memory coupled to the processor for storing data (see [0508]--flash memory),

wherein a transceiver housing coupled to a sensor affixed to the user remains in a fixed position supported by the single adhesive tape (see Fig 14B, elements 9, 16), the processor performs calculations using at least one of the signal produced by the sensor ([507] – "input module 174 sends the[sensor] data stream to a processor 176 that processes the data stream…"), the processor further performs at least one of storing the calculations in the memory ([0508] -- sensor data is stored prior to be compared and/or analyzed) and transmitting the calculations to at least one of the synchronous remote device.

Brister does not explicitly disclose an asynchronous remote device, and therefore does not disclose a transceiver comprising a transmitter coupled to a processor for transmitting data to a synchronous remote device and the asynchronous remote device; a receiver coupled to the processor for receiving data from the synchronous remote device and the asynchronous remote device.

However, Bernstein discloses a similar system with an asynchronous remote device, and a transceiver comprising a transmitter (see Fig 2, element 206) coupled to a processor (Fig 2, element 204) for transmitting data to a synchronous remote device and the asynchronous remote

device (see [0087]-[0091]); a receiver coupled to the processor for receiving data from the synchronous remote device and the asynchronous remote device (see Fig 2, element 206). It would have been obvious to one of ordinary skill in the art at the time the invention was made to combine the sensor, transceiver and synchronous remote device as disclosed by Brister with the transceiver for transmitting data do both a synchronous remote device and the asynchronous remote device as described by Bernstein to provide the predictable result of improving the Brister device by allowing further modes of data processing and transmission, such as by either (or both) synchronous, continuous, data transmission or asynchronous, "batched," data transmission.

As to claim 2, Brister further discloses wherein the transceiver exchanges data with a plurality of remote devices in a network structure (see [0514]).

As to claim 10, Brister further discloses wherein the data exchanged between the transceiver and the at least one remote device comprises at least one of: device configuration data; communication link configuration data; adaptive communication configuration data; glucose history data; and calibration data ([0485]).

As to claim 11, Brister further discloses wherein the device configuration data comprises at least one of: a device identification; user information; and time information ([0484] – "sensor manufacture").

As to claim 12, Brister further discloses wherein the communication link configuration data comprises at least one of: a communication rate; frequency information; and frequency hopping configuration information (see [0477] --"In some embodiments, a second quartz crystal

154 provides the time base for the RF carrier frequency used for data transmissions from the RF transceiver.”).

As to claim 14, Brister further discloses wherein the calibration data comprises at least one of: sensor initialization sequence and configuration information; and dynamic sensor initialization meters ([0488]).

As to claim 15, Brister further discloses wherein the processor calculates sensor glucose values using at least one of the signal received from the sensor, the data received from the at least one remote device and the data stored in the memory ([0522] to[0523]).

As to claim 16, Brister further discloses wherein a rate of exchanging data between the transceiver and the at least one remote device is dynamically changed depending on a characteristic of the calculated sensor glucose values (see [0530] – “If the data is not within the predetermined threshold, then the receiver can be configured to request additional reference analyte data.”).

As to claim 17, Brister further discloses wherein a glucose calculation algorithm for calculating the sensor glucose values is stored in the memory (see [0523] – “The sensor data point(s) can be smoothed (filtered) in certain embodiments using a filter, for example, a finite impulse response (FIR) or infinite impulse response (IIR) filter.”).

As to claim 18, Brister further discloses wherein the processor stores the calculated sensor glucose values in the memory or transmits the calculated sensor glucose values to the at least one remote device through the transmitter ([0514]).

As to claim 20, Brister further discloses wherein the receiver receives calibration data from the at least one remote device and the processor stores the received calibration data in the memory. (see [0524] and[0529])– reference data can come from another monitor).

As to claim 21, Brister further discloses wherein the processor performs a calibration using at least one of the calibration data stored in the memory, the signal received from the sensor and the calculated glucose sensor values ([0529]).

As to claim 22, Brister further discloses wherein a calibration algorithm for performing the calibration is stored in the memory (see [0521]).

As to claim 23, Brister further discloses comprising a display for displaying information processed by the processor (Fig 15, element 170).

As to claim 27, Brister further discloses wherein the housing is capable of detaching from the sensor and attaching to the at least one remote device ([0514] – wired connection to external device 180).

As to claim 28, Brister further discloses wherein the processor communicates with the sensor via wireless means ([0503]).

As to claim 29, Brister further discloses wherein the housing comprises a single communication port for facilitating at least two of: communication between the transceiver and the sensor; communication between the transceiver and the at least one remote device; and an electrical connection between the transceiver and a battery charger ([0520] – "a data communications port").

Claim 24 is rejected under pre-AIA 35 U.S.C. 103(a) as being unpatentable over Bernstein in view of US 2004/0176667 A1 to Mihai et al. (hereinafter "Mihai")

As to claim 24, Bernstein discloses a transceiver housing detachably coupled to a sensor located on a body of a user, the sensor producing a signal indicative of a user characteristic (see entire document, especially[0032]);

a processor formed within the transceiver housing and in communication with the sensor for processing the signal produced by the sensor (see Fig 2, element 204);

a transmitter coupled to the processor for transmitting data to the synchronous remote device (Fig 2, element 206);

a receiver coupled to the processor for receiving data from at the synchronous remote device and the asynchronous remote device (Fig 2, element 206); and

a memory coupled to the processor for storing data (Fig 2, element 207), wherein the processor performs calculations using at least one of the signal produced by the sensor (see [0046]), the data received from at least one of the synchronous remote device or the asynchronous remote device and the data stored in the memory, the processor further performs at least one of storing the calculations in the memory (see [0046]) and transmitting the calculations to at least one of the synchronous remote device or the asynchronous remote device through the transmitter (see [0087] to[0091]), but does not disclose the transceiver further comprising means for notifying the user that the at least one remote device is beyond a certain distance from the transceiver.

Mihai discloses means for notifying the user that the at least one remote device is beyond a certain distance from the transceiver ([0439]). It would have been obvious to one of ordinary skill in the art to combine the transceiver disclosed by Brister with the alerting means disclosed by Mihai to notify the patient or another that a connection is not operable.

Claims 4-5, 7 and 13 are rejected under 35 U.S.C. 103(a) as being unpatentable over Brister in view Bernstein and further in view of US 2003/0130616 A1 to Steil et al. (hereinafter "Steil").

As to claims 4-5, neither Brister nor Bernstein do not disclose wherein the transceiver wakes up from a sleep mode prior to exchanging data with the at least one remote device or further wherein the at least one remote device wakes up the transceiver.

However, Steil discloses a similar device wherein a transceiver wakes up from a sleep mode prior to exchanging data with the at least one remote device ([0328]) and further wherein the at least one remote device wakes up the transceiver ([0328]). It would have been obvious to one of ordinary skill in the art at the time the invention was made to combine the transceiver disclosed by Brister and Bernstein with the sleep mode and external device waking disclosed by Steil to conserve battery.

As to claim 7, neither Brister nor Bernstein do not explicitly disclose wherein the transceiver periodically wakes up independent of the at least one remote device. However, Steil discloses wherein the transceiver periodically wakes up independent of the at least one remote device ([0328]). It would have been obvious to one of ordinary skill in the art at the time the invention was made to combine the transceiver disclosed by Brister and Bernstein with the periodic waking disclosed by Steil to conserve battery.

As to claim 13, neither Brister nor Bernstein explicitly discloses wherein the glucose history data is exchanged according to a time interval. Steil discloses wherein the glucose history data is exchanged according to a time interval ([0328]). It would have been obvious to one of ordinary skill in the art to combine the sensor transceiver disclosed by Brister and Bernstein with

the time interval disclosed by Steil to save battery by only periodically sending glucose history data.

Claim 19 is rejected under 35 U.S.C. 103(a) as being unpatentable over Brister in view of Bernstein and further in view of US 2007/0197878 A1 (Shklarski).

As to claim 19, Brister does not explicitly disclose wherein the calculated sensor glucose values are secured via an encryption scheme before transmission to the at least one remote device. Shklarski teaches encrypting sensor data before transmission to an at least one remote device ([0089]). Therefore, it would have been obvious to one of ordinary skill in the art at the time the invention was made to combine the transceiver disclosed by Brister with the encryption disclosed by Shklarski to maintain patient confidentiality.

Claims 25-26 are rejected under 35 U.S.C. 103(a) as being unpatentable over Brister in view Bernstein and further in view of US 2007/0255126 A1 to Moberg et al. (hereinafter "Moberg").

As to claim 25, neither Brister nor Bernstein discloses wherein a power for exchanging data between the transceiver and the at least one remote device is dynamically changed depending on a strength of a detected signal between the transceiver and the at least one remote device. Moberg discloses wherein a power for exchanging data between the transceiver and the at least one remote device is dynamically changed depending on a strength of a detected signal between the transceiver and the at least one remote device ([0143]). It would have been obvious to one of ordinary skill in the art to combine the transceiver disclosed by Brister and Bernstein with the dynamic power disclosed by Moberg to conserve battery.

As to claim 26, neither Brister nor Bernstein discloses wherein a rate of exchanging data between the transceiver and the at least one remote device is dynamically changed depending on a power mode of at least one of the transceiver and the at least one remote device. Moberg discloses wherein a rate of exchanging data between the transceiver and the at least one remote device is dynamically changed depending on a power mode of at least one of the transceiver and the at least one remote device ([0143]). It would have been obvious to one of ordinary skill in the art to combine the transceiver disclosed by Brister and Bernstein with the dynamic data rate disclosed by Moberg to conserve battery.

Claim 6 is rejected under 35 U.S.C. 103(a) as being unpatentable over Brister in view of Bernstein in view of Steil and further in view of US 2005/0043594 to Dinsmoor et al. (hereinafter "Dinsmoor").

As to claim 6, Brister and Bernstein as modified by Steil discloses wake signal from an external device with an RF signal (see [0326]), but do not disclose an ultrasonic sensor for receiving an ultrasonic signal from the at least one remote device when the at least one remote device transmits the ultrasonic signal to the transceiver to wake up the transceiver. Dinsmoor teaches that an RF sensor and signal can be substituted for an ultrasonic sensor for receiving an ultrasonic signal from the at least one remote device when the at least one remote device transmits the ultrasonic signal to the transceiver to wake up the transceiver (see [0008]). Thus, it would have been obvious to one of ordinary skill in the art to provide the ultrasound sensor and ultrasound signal disclosed by Dinsmoor, since doing so would have been no more than a simple substitution of known elements to achieve predictable results.

Response to Arguments

Applicant's arguments filed March 21, 2012 have been fully considered but they are not persuasive.

First, Examiner understands that the arguments applicable to the Reggiardo reference would also be applicable to the combination of Brister and Bernstein. Applicants argue that a combination of an Brister and Bernstein may be improper because such a modification would result in making the prior art unsatisfactory for its intended purpose. Specifically, Applicants appear to contend that such a combination would preclude the continuous monitoring towards which Brister is directed. Examiner respectfully disagrees and notes that the Bernstein reference describes the desirability of multiple types of data transmission, including continuous glucose monitoring and transmission.

Next, Applicants requested further clarification as to the grounds of rejection for claim 24. Examiner regretfully failed to specify the correct graph number citation for that reference. The Office action should have referred to graph[0439] instead of[0429]. This graph provides the requisite basis for rejecting the claim limitation related to notifying a user that the at least one remote device is beyond a certain distance from the transceiver.

Finally, arguments in support of other claims incorporated the contentions described above.

Conclusion

Any inquiry concerning this communication or earlier communications from the examiner should be directed to Eric Messersmith whose telephone number is (571)270-7081. The examiner can normally be reached on Mon-Fri 8:30 a.m. - 5:00 p.m.

If attempts to reach the examiner by telephone are unsuccessful, the examiner's supervisor, Patricia Mallari can be reached on (571) 272-4729. The fax phone number for the organization where this application or proceeding is assigned is 571-273-8300.

Information regarding the status of an application may be obtained from the Patent Application Information Retrieval (PAIR) system. Status information for published applications may be obtained from either Private PAIR or Public PAIR. Status information for unpublished applications is available through Private PAIR only. For more information about the PAIR system, see http://pair-direct.uspto.gov. Should you have questions on access to the Private PAIR system, contact the Electronic Business Center (EBC) at 866-217-9197 (toll-free). If you would like assistance from a USPTO Customer Service Representative or access to the automated information system, call 800-786-9199 (IN USA OR CANADA) or 571-272-1000.

/Eric Messersmith/
Examiner, Art Unit 3735

Notice of References Cited	Application/Control No. 12/056,651	Applicant(s)/Patent Under Reexamination PATEL ET AL.	
	Examiner Eric Messersmith	Art Unit 3735	Page 1 of 1

U.S. PATENT DOCUMENTS

*		Document Number Country Code-Number-Kind Code	Date MM-YYYY	Name	Classification
*	A	US-2008/0319296	12-2008	Bernstein et al.	600/365
	B	US-			
	C	US-			
	D	US-			
	E	US-			
	F	US-			
	G	US-			
	H	US-			
	I	US-			
	J	US-			
	K	US-			
	L	US-			
	M	US-			

FOREIGN PATENT DOCUMENTS

*		Document Number Country Code-Number-Kind Code	Date MM-YYYY	Country	Name	Classification
	N					
	O					
	P					
	Q					
	R					
	S					
	T					

NON-PATENT DOCUMENTS

*		Include as applicable: Author, Title Date, Publisher, Edition or Volume, Pertinent Pages)
	U	
	V	
	W	
	X	

*A copy of this reference is not being furnished with this Office action. (See MPEP § 707.05(a).)
Dates in MM-YYYY format are publication dates. Classifications may be US or foreign.

EAST Search History

EAST Search History (Prior Art)

Ref #	Hits	Search Query	DBs	Default Operator	Plurals	Time Stamp
S1	6139	600/300,365.ccls.	US-PGPUB; USPAT; EPO; JPO; DERWENT	OR	ON	2011/06/17 09:58
S2	90	((HIMANSHU) near2 (PATEL)).INV.	US-PGPUB; USPAT	OR	ON	2011/06/17 10:04
S3	91	((WAYNE) near2 (MORGAN)).INV.	US-PGPUB; USPAT	OR	ON	2011/06/17 10:04
S4	23	((EDWARD) near2 (CHERNOFF)).INV.	US-PGPUB; USPAT	OR	ON	2011/06/17 10:04
S5	109	((JOHN) near2 (MASTROTOTARO)).INV.	US-PGPUB; USPAT	OR	ON	2011/06/17 10:04
S6	195	S2 or S3 or S4	US-PGPUB; USPAT; EPO; JPO; DERWENT	OR	ON	2011/06/17 10:04
S7	199	("20080060955" "7278983" "7722536" "7901394" "20040167464" "20060173260" "20070060869" "20070060870" "20070093786" "20070293843" "20090048501" "20090069744" "20090085768" "20090227855" "20100099972" "20100099973" "20100235439" "20110022025" "4545382" "6063637" "5212988" "5593852" "5667983" "5837199" "5965380" "6042751" "6083710" "6121009" "6150128" "6162611" "4445885" "4758323" "4788150" "4795707" "5551422" "5665215" "5670057" "5693577" "5695623" "5951521" "6027479" "6037178" "6061128" "6071739" "6077660" "6107083" "6221238" "6221238" "6287765" "6350431" "6462007" "6641533" "7677409" "20020002326" "20020049480" "20020058906" "20040073095" "20060253085" "20060258761" "20070156033" "20070244379" "20080021666" "20080039770" "20080076997" "20080083773" "20080094804" "20090033333" "20090061076" "20090177068" "20090178923" "20090267774"	US-PGPUB; USPAT; EPO; JPO; DERWENT	OR	ON	2011/06/17 10:04

		"20090267775" "20090270705" "20090287073" "20100053556" "20100063371" "20100147870" "20100331644" "5686888" "4268756" "4360729" "4517566" "4588978" "4604740" "5008678" "5197668" "5203497" "5245396" "5272476" "5313944" "5321273" "5483767" "5499292" "5504325" "5506410" "5511335" "5546695" "5589940" "5664035" "5666159").pn.				
S12	199	("20080060955" "7278983" "7722536" "7901394" "20040167464" "20060173260" "20070060869" "20070060870" "20070093786" "20070293843" "20090048501" "20090069744" "20090085768" "20090227855" "20100099972" "20100099973" "20100235439" "20110022025" "4545382" "6063637" "5212988" "5593852" "5667983" "5837199" "5965380" "6042751" "6083710" "6121009" "6150128" "6162611" "4445885" "4758323" "4788150" "4795707" "5551422" "5665215" "5670057" "5693577" "5695623" "5951521" "6027479" "6037178" "6061128" "6071739" "6077660" "6107083" "6221238" "6221238" "6287765" "6350431" "6462007" "6641533" "7677409" "20020002326" "20020049480" "20020058906" "20040073095" "20060253085" "20060258761" "20070156033" "20070244379" "20080021666" "20080039770" "20080076997" "20080083773" "20080094804" "20090033333" "20090061076" "20090177068" "20090178923" "20090267774" "20090267775" "20090270705" "20090287073" "20100053556" "20100063371" "20100147870" "20100331644" "5686888" "4268756" "4360729" "4517566" "4588978" "4604740" "5008678" "5197668" "5203497" "5245396" "5272476" "5313944" "5321273" "5483767" "5499292" "5504325" "5506410" "5511335" "5546695" "5589940" "5664035" "5666159").pn.	US-PGPUB; USPAT; EPO; JPO; DERWENT	OR	ON	2011/06/17 13:00
S13	8	S12 and dexcom	US-PGPUB; USPAT; EPO; JPO; DERWENT	OR	ON	2011/06/17 13:00
S14	823	brauker.in. or brister.in.	US-PGPUB; USPAT; EPO; JPO; DERWENT	OR	ON	2011/06/17 13:17
S15	573	S14 and glucose	US-PGPUB;	OR	ON	2011/06/17 13:17

			USPAT; EPO; JPO; DERWENT			
S16	4430	lord.in.	US-PGPUB; USPAT; EPO; JPO; DERWENT	OR	ON	2011/06/17 13:17
S17	178	S16 and glucose	US-PGPUB; USPAT; EPO; JPO; DERWENT	OR	ON	2011/06/17 13:17
S18	751	S17 or S15	US-PGPUB; USPAT; EPO; JPO; DERWENT	OR	ON	2011/06/17 13:18
S19	112	S18 and housing with (attach$6 detach$6 mate$2 mating$4 $2coupl$4)	US-PGPUB; USPAT; EPO; JPO; DERWENT	OR	ON	2011/06/17 13:19
S20	54	S19 and housing with (transmit$6 transceiv$4 wireless communicat$4)	US-PGPUB; USPAT; EPO; JPO; DERWENT	OR	ON	2011/06/17 13:20
S21	1815	600/365,347.ccls.	US-PGPUB; USPAT; EPO; JPO; DERWENT	OR	ON	2011/06/17 13:21
S22	20	S21 and (tranceiv$4 transmit$4 communicat$4 wireless$4 telemeter$4 telemetr$4) with wake	US-PGPUB; USPAT; EPO; JPO; DERWENT	OR	ON	2011/06/17 13:22
S23	3	S20 and wake	US-PGPUB; USPAT; EPO; JPO; DERWENT	OR	ON	2011/06/17 13:24
S24	565	S21 and (tranceiv$4 transmit$4 communicat$4 wireless$4 telemeter$4 telemetr$4) with (activat$4 power$4)	US-PGPUB; USPAT; EPO; JPO; DERWENT	OR	ON	2011/06/17 13:51
S25	9	S21 and (tranceiv$4 transmit$4 communicat$4 wireless$4 telemeter$4 telemetr$4) with (activat$4 power$4) with (two-way or two adj way or bi$4direction$4)	US-PGPUB; USPAT; EPO; JPO; DERWENT	OR	ON	2011/06/17 13:52
S26	7	S21 and (tranceiv$4 transmit$4 communicat$4 wireless$4 telemeter$4 telemetr$4) with (activat$4 power$4) with (two-way or two adj way or bi$4direction$4) and processor with (tranceiv$4 transmit$4 communicat$4 wireless$4 telemeter$4 telemetr$4)	US-PGPUB; USPAT; EPO; JPO; DERWENT	OR	ON	2011/06/17 13:53

S27	16	S18 and housing with (attach$6 detach$6 mate$2 mating$4 $2coupl$4) with ($5process$3)	US-PGPUB; USPAT; EPO; JPO; DERWENT	OR	ON	2011/06/17 13:55
S28	199	("20080060955" "7278983" "7722536" "7901394" "20040167464" "20060173260" "20070060869" "20070060870" "20070093786" "20070293843" "20090048501" "20090069744" "20090085768" "20090227855" "20100099972" "20100099973" "20100235439" "20110022025" "4545382" "6063637" "5212988" "5593852" "5667983" "5837199" "5965380" "6042751" "6083710" "6121009" "6150128" "6162611" "4445885" "4758323" "4788150" "4795707" "5551422" "5665215" "5670057" "5693577" "5695623" "5951521" "6027479" "6037178" "6061128" "6071739" "6077660" "6107083" "6221238" "6221238" "6287765" "6350431" "6462007" "6641533" "7677409" "20020002326" "20020049480" "20020058906" "20040073095" "20060253085" "20060258761" "20070156033" "20070244379" "20080021666" "20080039770" "20080076997" "20080083773" "20080094804" "20090033333" "20090061076" "20090177068" "20090178923" "20090267774" "20090267775" "20090270705" "20090287073" "20100053556" "20100063371" "20100147870" "20100331644" "5686888" "4268756" "4360729" "4517566" "4588978" "4604740" "5008678" "5197668" "5203497" "5245396" "5272476" "5313944" "5321273" "5483767" "5499292" "5504325" "5506410" "5511335" "5546695" "5589940" "5664035" "5666159").pn.	US-PGPUB; USPAT; EPO; JPO; DERWENT	OR	ON	2011/06/17 16:16
S29	28	S28 and $synchron$5	US-PGPUB; USPAT; EPO; JPO; DERWENT	OR	ON	2011/06/17 16:16
S30	823	brauker.in. or brister.in.	US-PGPUB; USPAT; EPO; JPO; DERWENT	OR	ON	2011/06/17 16:16
S31	823	S30	US-PGPUB; USPAT; EPO; JPO; DERWENT	OR	ON	2011/06/17 16:16
S32	3	S28 and wake with sleep adj mode	US-PGPUB;	OR	ON	2011/06/17 16:18

			USPAT; EPO; JPO; DERWENT			
S33	0	S30 and wake with sleep adj mode	US-PGPUB; USPAT; EPO; JPO; DERWENT	OR	ON	2011/06/17 16:19
S34	6139	600/300,365.ccls.	US-PGPUB; USPAT; EPO; JPO; DERWENT	OR	ON	2011/06/17 16:19
S35	21	S34 and wake with sleep adj mode	US-PGPUB; USPAT; EPO; JPO; DERWENT	OR	ON	2011/06/17 16:19
S36	3	S34 and wake with ultraso$6	US-PGPUB; USPAT; EPO; JPO; DERWENT	OR	ON	2011/06/17 16:19
S37	1783	A61b005/145.ipc.	US-PGPUB; USPAT; EPO; JPO; DERWENT	OR	ON	2011/06/17 16:20
S38	3	S36 and wake with ultraso$6	US-PGPUB; USPAT; EPO; JPO; DERWENT	OR	ON	2011/06/17 16:20
S39	3	S36 and (sleep activat$4) with ultraso$6	US-PGPUB; USPAT; EPO; JPO; DERWENT	OR	ON	2011/06/17 16:21
S40	312	(sleep activat$4) with mode with ultraso$6	US-PGPUB; USPAT; EPO; JPO; DERWENT	OR	ON	2011/06/17 16:21
S41	465	S31 and implant$4	US-PGPUB; USPAT; EPO; JPO; DERWENT	OR	ON	2011/06/17 16:21
S42	6	(sleep activat$4) with mode with ultraso$6 with wak$4	US-PGPUB; USPAT; EPO; JPO; DERWENT	OR	ON	2011/06/17 16:22
S43	0	S34 with power$4 with ultraso$6 with (battery or conserv$4)	US-PGPUB; USPAT; EPO; JPO; DERWENT	OR	ON	2011/06/17 16:23
S44	0	S34 with mode with ultraso$6	US-PGPUB;	OR	ON	2011/06/17 16:23

			USPAT; EPO; JPO; DERWENT			
S45	15	S34 and power$4 with ultraso$6 with (battery or conserv$4)	US-PGPUB; USPAT; EPO; JPO; DERWENT	OR	ON	2011/06/17 16:23
S46	5	S34 and periodic$4 with (conserv$4 save saving extend$4 length$4) with battery	US-PGPUB; USPAT; EPO; JPO; DERWENT	OR	ON	2011/06/17 16:32
S47	58	S34 and periodic$4 near7 battery	US-PGPUB; USPAT; EPO; JPO; DERWENT	OR	ON	2011/06/17 16:37
S48	265	S34 and periodic$4 near5 transmit$4	US-PGPUB; USPAT; EPO; JPO; DERWENT	OR	ON	2011/06/17 16:39
S49	31	S48 and asynchronous$4	US-PGPUB; USPAT; EPO; JPO; DERWENT	OR	ON	2011/06/17 16:43
S50	0	2006/0183985.pn.	US-PGPUB; USPAT; EPO; JPO; DERWENT	OR	ON	2011/06/17 17:08
S51	2	"20060183985".pn.	US-PGPUB; USPAT; EPO; JPO; DERWENT	OR	ON	2011/06/17 17:09
S52	1	S51 and transmit$4	US-PGPUB; USPAT; EPO; JPO; DERWENT	OR	ON	2011/06/17 17:09
S53	1	S51 and transmit$4 same request	US-PGPUB; USPAT; EPO; JPO; DERWENT	OR	ON	2011/06/17 17:12
S54	2	"20050043594".pn.	US-PGPUB; USPAT; EPO; JPO; DERWENT	OR	ON	2011/06/17 17:17
S55	0	S34 and asynchronous$ with expens$4	US-PGPUB; USPAT; EPO; JPO; DERWENT	OR	ON	2011/06/17 17:42
S56	281	S34 and asynchronous$	US-PGPUB;	OR	ON	2011/06/17 17:42

			USPAT; EPO; JPO; DERWENT			
S57	0	S34 and asynchronous$ with cheap$4	US-PGPUB; USPAT; EPO; JPO; DERWENT	OR	ON	2011/06/17 17:42
S58	61	S34 and asynchronous$ with data and glucose	US-PGPUB; USPAT; EPO; JPO; DERWENT	OR	ON	2011/06/17 17:42
S59	9	S34 and asynchronous$ with data and glucose and hopping	US-PGPUB; USPAT; EPO; JPO; DERWENT	OR	ON	2011/06/17 17:43
S60	8	S34 and asynchronous$ with data and glucose and scanning	US-PGPUB; USPAT; EPO; JPO; DERWENT	OR	ON	2011/06/17 17:43
S61	826	brauker.in. or brister.in.	US-PGPUB; USPAT; EPO; JPO; DERWENT	OR	ON	2011/06/20 11:37
S62	826	S61	US-PGPUB; USPAT; EPO; JPO; DERWENT	OR	ON	2011/06/20 11:37
S63	0	S62 and encrypt$4 near5 external	US-PGPUB; USPAT; EPO; JPO; DERWENT	OR	ON	2011/06/20 11:38
S64	0	S62 and encrypt$4 with external	US-PGPUB; USPAT; EPO; JPO; DERWENT	OR	ON	2011/06/20 11:38
S65	0	S62 and encrypt$4	US-PGPUB; USPAT; EPO; JPO; DERWENT	OR	ON	2011/06/20 11:38
S66	6139	600/300,365.ccls.	US-PGPUB; USPAT; EPO; JPO; DERWENT	OR	ON	2011/06/20 11:40
S67	6139	S66	US-PGPUB; USPAT; EPO; JPO; DERWENT	OR	ON	2011/06/20 11:40
S68	595	S67 and encrypt$4	US-PGPUB;	OR	ON	2011/06/20 11:40

			USPAT; EPO; JPO; DERWENT			
S69	30	S67 and encrypt$4 with external$4	US-PGPUB; USPAT; EPO; JPO; DERWENT	OR	ON	2011/06/20 11:40
S70	583	encrypt$4 with device and glucose	US-PGPUB; USPAT; EPO; JPO; DERWENT	OR	ON	2011/06/20 11:42
S71	182	S67 and encrypt$4 with device	US-PGPUB; USPAT; EPO; JPO; DERWENT	OR	ON	2011/06/20 11:42
S72	7	S67 and encrypt$4 with device same glucose	US-PGPUB; USPAT; EPO; JPO; DERWENT	OR	ON	2011/06/20 11:42
S73	53	S67 and encrypt$4 with device and glucose with data	US-PGPUB; USPAT; EPO; JPO; DERWENT	OR	ON	2011/06/20 11:46
S74	1815	600/365,347.ccls.	US-PGPUB; USPAT; EPO; JPO; DERWENT	OR	ON	2011/06/20 13:31
S75	542	S74 and proximity	US-PGPUB; USPAT; EPO; JPO; DERWENT	OR	ON	2011/06/20 13:31
S76	8	S74 and proximity with (alert$4 alarm$4 audibl$4 aud$4)	US-PGPUB; USPAT; EPO; JPO; DERWENT	OR	ON	2011/06/20 13:32
S77	37	S74 and bluetooth near5 range	US-PGPUB; USPAT; EPO; JPO; DERWENT	OR	ON	2011/06/20 13:34
S78	48	S74 and display$4 near5 connection	US-PGPUB; USPAT; EPO; JPO; DERWENT	OR	ON	2011/06/20 13:35
S79	90	S61 and out near2 range	US-PGPUB; USPAT; EPO; JPO; DERWENT	OR	ON	2011/06/20 13:37
S80	4	alarm with range with connection with bluetooth	US-PGPUB;	OR	ON	2011/06/20 13:38

			USPAT; EPO; JPO; DERWENT			
S81	44	alarm with range with bluetooth	US-PGPUB; USPAT; EPO; JPO; DERWENT	OR	ON	2011/06/20 13:38
S82	77	indicator near bluetooth	US-PGPUB; USPAT; EPO; JPO; DERWENT	OR	ON	2011/06/20 13:38
S83	2	S66 and signal near2 range near2 (display screen indicator)	US-PGPUB; USPAT; EPO; JPO; DERWENT	OR	ON	2011/06/20 13:40
S84	841	signal near2 range near2 (display screen indicator)	US-PGPUB; USPAT; EPO; JPO; DERWENT	OR	ON	2011/06/20 13:41
S85	85	S84 and "600"/$.ccls.	US-PGPUB; USPAT; EPO; JPO; DERWENT	OR	ON	2011/06/20 13:41
S86	30	signal near2 range near2 (display screen indicator) with (wireless connection)	US-PGPUB; USPAT; EPO; JPO; DERWENT	OR	ON	2011/06/20 13:42
S87	14624	signal near2 strength with (display screen indicator)	US-PGPUB; USPAT; EPO; JPO; DERWENT	OR	ON	2011/06/20 13:42
S88	316	S87 and "600"/$.ccls.	US-PGPUB; USPAT; EPO; JPO; DERWENT	OR	ON	2011/06/20 13:42
S89	6	S87 and 600/365.ccls.	US-PGPUB; USPAT; EPO; JPO; DERWENT	OR	ON	2011/06/20 13:43
S90	327	alert near5 signal near5 (weak or loss or lost)	US-PGPUB; USPAT; EPO; JPO; DERWENT	OR	ON	2011/06/20 13:44
S91	380	alert$ near5 signal near5 (weak or loss or lost)	US-PGPUB; USPAT; EPO; JPO; DERWENT	OR	ON	2011/06/20 13:44
S92	0	S91 and 600/365.ccls.	US-PGPUB;	OR	ON	2011/06/20 13:45

			USPAT; EPO; JPO; DERWENT			
S93	294	S66 and (alert$4 alarm$4 indicat$ beep$4) with outside with range	US-PGPUB; USPAT; EPO; JPO; DERWENT	OR	ON	2011/06/20 13:45
S94	24	S66 and (alert$4 alarm$4 indicat$ beep$4) with outside with range same wireless	US-PGPUB; USPAT; EPO; JPO; DERWENT	OR	ON	2011/06/20 13:45
S95	5	S66 and (dynamic$4 chang$4) with power$4 with (increas$ rais$4 greater) with signal	US-PGPUB; USPAT; EPO; JPO; DERWENT	OR	ON	2011/06/20 13:53
S96	12	S66 and (dynamic$4 chang$4) with power$4 with wireless	US-PGPUB; USPAT; EPO; JPO; DERWENT	OR	ON	2011/06/20 13:54
S97	2	"20060183985".pn.	US-PGPUB; USPAT; EPO; JPO; DERWENT	OR	ON	2011/12/14 13:39
S98	1	S97 and (adhes$6 adher$6 stick$4 tape)	US-PGPUB; USPAT; EPO; JPO; DERWENT	OR	ON	2011/12/14 13:39
S99	2273	600/300,365.ccls. and (adhes$6 adher$6 stick$4 tape)	US-PGPUB; USPAT; EPO; JPO; DERWENT	OR	ON	2011/12/14 17:02
S100	106	600/300,365.ccls. and (adhes$6 adher$6 stick$4 tape) with receiver	US-PGPUB; USPAT; EPO; JPO; DERWENT	OR	ON	2011/12/14 17:03
S101	68	600/300,365.ccls. and (adhes$6 adher$6 stick$4 tape) with receiver and glucose near2 sens$5	US-PGPUB; USPAT; EPO; JPO; DERWENT	OR	ON	2011/12/14 17:03
S102	1087	brauker.in. or brister.in.	US-PGPUB; USPAT; EPO; JPO; DERWENT	OR	ON	2014/01/09 19:33
S103	9476	600/300,365.ccls.	US-PGPUB; USPAT; EPO; JPO; DERWENT	OR	ON	2014/01/09 19:33
S104	3301	600/365,347.ccls.	US-PGPUB;	OR	ON	2014/01/09 19:33

			USPAT; EPO; JPO; DERWENT			
S105	867	S104 and proximity	US-PGPUB; USPAT; EPO; JPO; DERWENT	OR	ON	2014/01/09 19:33
S106	17	S104 and proximity with (alert$4 alarm$4 audibl$4 aud$4)	US-PGPUB; USPAT; EPO; JPO; DERWENT	OR	ON	2014/01/09 19:33
S107	124	S104 and bluetooth near5 range	US-PGPUB; USPAT; EPO; JPO; DERWENT	OR	ON	2014/01/09 19:33
S108	77	S104 and display$4 near5 connection	US-PGPUB; USPAT; EPO; JPO; DERWENT	OR	ON	2014/01/09 19:33
S109	138	S102 and out near2 range	US-PGPUB; USPAT; EPO; JPO; DERWENT	OR	ON	2014/01/09 19:33
S110	11	alarm with range with connection with bluetooth	US-PGPUB; USPAT; EPO; JPO; DERWENT	OR	ON	2014/01/09 19:33
S111	93	alarm with range with bluetooth	US-PGPUB; USPAT; EPO; JPO; DERWENT	OR	ON	2014/01/09 19:33
S112	320	indicator near bluetooth	US-PGPUB; USPAT; EPO; JPO; DERWENT	OR	ON	2014/01/09 19:33
S113	3	S103 and signal near2 range near2 (display screen indicator)	US-PGPUB; USPAT; EPO; JPO; DERWENT	OR	ON	2014/01/09 19:33
S114	1035	signal near2 range near2 (display screen indicator)	US-PGPUB; USPAT; EPO; JPO; DERWENT	OR	ON	2014/01/09 19:33
S115	2490	S105 S106 S107 S108 S109 S110 S111 S112 S113 S114	US-PGPUB; USPAT; EPO; JPO; DERWENT	OR	ON	2014/01/09 19:33
S116	0	S115 and mihai.inv.	US-PGPUB;	OR	ON	2014/01/09 19:34

			USPAT; EPO; JPO; DERWENT			
S117	0	S115 and "2004017667".pn.	US-PGPUB; USPAT; EPO; JPO; DERWENT	OR	ON	2014/01/09 19:34
S118	1	S103 and (alert$4 alarm$4 indicat$ beep$4) with outside with range and "20040176667".pn.	US-PGPUB; USPAT; EPO; JPO; DERWENT	OR	ON	2014/01/09 19:35
S119	2	"20070049984".pn.	US-PGPUB; USPAT; EPO; JPO; DERWENT	OR	ON	2014/01/10 10:32
S120	2	"6175752".pn.	US-PGPUB; USPAT; EPO; JPO; DERWENT	OR	ON	2014/01/12 14:16
S121	1	S120 and period$4 with data	US-PGPUB; USPAT; EPO; JPO; DERWENT	OR	ON	2014/01/12 14:16
S122	0	("20090085768").PN.	USPAT; USOCR	OR	OFF	2014/01/12 15:03
S123	1	("20090085768").PN.	US-PGPUB; USPAT; USOCR	OR	OFF	2014/01/12 15:03
S124	0	S123 and asynchronous	USPAT	OR	OFF	2014/01/12 15:04
S125	1	S123 and asynchronous	US-PGPUB; USPAT; USOCR	OR	OFF	2014/01/12 15:04
S126	1	S123 and asynchronous$4	US-PGPUB; USPAT; USOCR	OR	OFF	2014/01/12 15:05
S127	1	S123 and remote adj device	US-PGPUB; USPAT; USOCR	OR	OFF	2014/01/12 15:06
S128	1	"6175752".pn.	US-PGPUB; USPAT; USOCR	OR	OFF	2014/01/12 15:06
S129	0	S128 and asynchronous$4	US-PGPUB; USPAT; USOCR	OR	OFF	2014/01/12 15:06
S130	0	"6175752".pn. and wake	US-PGPUB; USPAT;	OR	OFF	2014/01/12 15:07

			USOCR			
S131	1	"6175752".pn. and awake$4	US-PGPUB; USPAT; USOCR	OR	OFF	2014/01/12 15:07
S132	0	"6175752".pn. and data with intermit$6	US-PGPUB; USPAT; USOCR	OR	OFF	2014/01/12 15:07
S133	0	"6175752".pn. and data with packet$4	US-PGPUB; USPAT; USOCR	OR	OFF	2014/01/12 15:07
S134	0	"6175752".pn. and data same packet$4	US-PGPUB; USPAT; USOCR	OR	OFF	2014/01/12 15:07
S135	1	"6175752".pn. and data with transmit$4	US-PGPUB; USPAT; USOCR	OR	OFF	2014/01/12 15:07
S136	0	"600"/$.ccls. and synchronous$4 with asynchonous$4	US-PGPUB; USPAT; USOCR	OR	OFF	2014/01/12 15:11
S137	1060	"600"/$.ccls. and synchronous$4 same asynchronous$4	US-PGPUB; USPAT; USOCR	OR	OFF	2014/01/12 15:12
S138	920	"600"/$.ccls. and synchronous$4 with asynchronous$4	US-PGPUB; USPAT; USOCR	OR	OFF	2014/01/12 15:12
S139	28	"600"/309,316,365.ccls. and synchronous$4 with asynchronous$4	US-PGPUB; USPAT; USOCR	OR	OFF	2014/01/12 15:12
S140	1	("20090076358").PN.	US-PGPUB; USPAT; USOCR	OR	OFF	2014/01/12 15:26
S141	1	"20030130616".pn.	US-PGPUB; USPAT; USOCR	OR	OFF	2014/01/12 16:36
S142	0	S141 and bluetooth	US-PGPUB; USPAT; USOCR	OR	OFF	2014/01/12 16:36
S143	152	reggiardo.inv.	US-PGPUB; USPAT; EPO; JPO; DERWENT	OR	ON	2014/01/13 11:36
S144	0	S143 and synchronous$4 same asynchronous$4	US-PGPUB; USPAT; EPO; JPO; DERWENT	OR	ON	2014/01/13 11:37

S145	0	S143 and synchronous$4	US-PGPUB; USPAT; EPO; JPO; DERWENT	OR	ON	2014/01/13 11:37
S146	9	S143 and asynchronous$4	US-PGPUB; USPAT; EPO; JPO; DERWENT	OR	ON	2014/01/13 11:37
S147	199145	"340"/$.ccls.	US-PGPUB; USPAT; EPO; JPO; DERWENT	OR	ON	2014/01/13 11:42
S148	1038	S147 and synchronous$4 with asynchronous$4	US-PGPUB; USPAT; EPO; JPO; DERWENT	OR	ON	2014/01/13 11:42
S149	14	S148 and glucose	US-PGPUB; USPAT; EPO; JPO; DERWENT	OR	ON	2014/01/13 11:42
S150	2	"20070223404".pn.	US-PGPUB; USPAT; EPO; JPO; DERWENT	OR	ON	2014/01/13 11:46
S151	2	"20070233521".pn.	US-PGPUB; USPAT; EPO; JPO; DERWENT	OR	ON	2014/01/13 11:47
S152	1	"600"/309,316,365.ccls. and synchronous$4 adj2 mode	US-PGPUB; USPAT; USOCR	OR	OFF	2014/01/13 12:52
S153	3	"600"/309,316,365.ccls. and asynchronous$4 adj2 mode	US-PGPUB; USPAT; USOCR	OR	OFF	2014/01/13 12:53
S154	187	"600"/$.ccls. and asynchronous$4 adj2 mode	US-PGPUB; USPAT; USOCR	OR	OFF	2014/01/13 12:54
S155	125	S154 and @ad<"20071002"	US-PGPUB; USPAT; USOCR	OR	OFF	2014/01/13 12:54
S156	122	"600"/$.ccls. and synchronous$4 adj2 mode	US-PGPUB; USPAT; USOCR	OR	OFF	2014/01/13 12:54
S157	35	S156 and S155	US-PGPUB; USPAT; USOCR	OR	OFF	2014/01/13 12:54

S158	1	"7336738".pn.	US-PGPUB; USPAT; USOCR	OR	OFF	2014/01/13 13:06
S159	19	("20020152054" | "20020181622" | "4393458" | "4884227" | "5579335" | "5717713" | "5920278" | "5953649" | "5974083" | "6681199" | "7062282").PN. OR ("7336738").URPN.	US-PGPUB; USPAT; USOCR	OR	OFF	2014/01/13 13:17
S160	689	h04B1/69.cpc.	US-PGPUB; USPAT; USOCR	OR	OFF	2014/01/13 13:21
S161	0	A61B$.ccls.	US-PGPUB; USPAT; USOCR	OR	OFF	2014/01/13 13:22
S162	254688	A61B$.cpc.	US-PGPUB; USPAT; USOCR	OR	OFF	2014/01/13 13:22
S163	3	S160 and S162	US-PGPUB; USPAT; USOCR	OR	OFF	2014/01/13 13:22
S164	720	375/240.28.ccls.	US-PGPUB; USPAT; USOCR	OR	OFF	2014/01/13 13:24
S165	38	S164 and asynchronous$4 same synchronous$4	US-PGPUB; USPAT; USOCR	OR	OFF	2014/01/13 13:24
S166	0	375/370.ccls. and "600"/$.ccls.	US-PGPUB; USPAT; USOCR	OR	OFF	2014/01/13 13:26
S167	130	375/370.ccls.	US-PGPUB; USPAT; USOCR	OR	OFF	2014/01/13 13:26
S168	1	"8279274".pn.	US-PGPUB; USPAT; USOCR	OR	OFF	2014/01/13 13:28
S169	11	("20040196364" | "20050004473" | "20070055099" | "4424532" | "5103308" | "5168246" | "5664045" | "5712624" | "6754280" | "7336738" | "7440765").PN. OR ("8279274").URPN.	US-PGPUB; USPAT; USOCR	OR	OFF	2014/01/13 13:28
S170	699	S148 and @ad<"20071002"	US-PGPUB; USPAT; USOCR	OR	OFF	2014/01/13 13:32
S171	327	S170 and real adj time	US-PGPUB; USPAT; USOCR	OR	OFF	2014/01/13 13:33
S172	74	("20040263354" | "20040097796" |	US-	OR	OFF	2014/01/13

		"7153289" | "20070135866" | "20060253300" | "20070118397" | "6287252" | "7294105" | "20020018478" | "6580700" | "20060026296" | "20040102683" | "7153263" | "20050071190" | "5319363" | "5558638" | "6847892" | "20040125776" | "6864803" | "7242907" | "20030133422" | "7821964" | "20020013518" | "20010044731" | "20050154271" | "20050251552" | "20090082635" | "20050119535" | "20060241392" | "6484221" | "6154675" | "20060293571" | "6728576" | "6285897" | "6443890" | "20050080403" | "7151765" | "5376070" | "20030207113" | "20040122353" | "5754111" | "20060238333" | "5689229" | "7327705" | "20050143671" | "20040167465" | "6544173" | "20070088521" | "20090081951" | "20050038680" | "20040203362" | "20060074462" | "6747556" | "20080154503" | "20030025599" | "20070255111" | "6385593" | "5898690" | "20060045134" | "7184449" | "20070223404" | "6438603" | "20070233521" | "6763269" | "7396330" | "20020055857" | "6418346" | "6442432" | "7647237" | "7002944" | "7164661" | "20070030847" | "7333514" | "6564104").PN.	PGPUB; USPAT; USOCR			13:37
S173	10	S172 and synchronous$4 same asynchronous$4	US-PGPUB; USPAT; USOCR	OR	OFF	2014/01/13 13:40
S174	1	"20100076280".pn.	US-PGPUB; USPAT; USOCR	OR	OFF	2014/01/13 15:15
S175	1	"20080319296".pn.	US-PGPUB; USPAT; USOCR	OR	OFF	2014/01/13 15:16

1/14/2014 2:33:19 PM
C:\Users\emessersmith\Documents\EAST\Workspaces\12056651\12056651.wsp

Index of Claims	Application/Control No.	Applicant(s)/Patent Under Reexamination
	12056651	PATEL ET AL.
	Examiner	**Art Unit**
	ERIC MESSERSMITH	3735

✓	Rejected	-	Cancelled	N	Non-Elected	A	Appeal
=	Allowed	÷	Restricted	I	Interference	O	Objected

☐ Claims renumbered in the same order as presented by applicant ☐ CPA ☐ T.D. ☐ R.1.47

CLAIM		DATE								
Final	Original	06/20/2011	12/14/2011	01/14/2014						
	1	✓	✓	✓						
	2	✓	✓	✓						
	3	✓	✓	-						
	4	✓	✓	✓						
	5	✓	✓	✓						
	6	✓	✓	✓						
	7	✓	✓	✓						
	8	✓	✓	-						
	9	✓	✓	✓						
	10	✓	✓	✓						
	11	✓	✓	✓						
	12	✓	✓	✓						
	13	✓	✓	✓						
	14	✓	✓	✓						
	15	✓	✓	✓						
	16	✓	✓	✓						
	17	✓	✓	✓						
	18	✓	✓	✓						
	19	✓	✓	✓						
	20	✓	✓	✓						
	21	✓	✓	✓						
	22	✓	✓	✓						
	23	✓	✓	✓						
	24	✓	✓	✓						
	25	✓	✓	✓						
	26	✓	✓	✓						
	27	✓	✓	✓						
	28	✓	✓	✓						
	29	✓	✓	✓						

Search Notes	Application/Control No.	Applicant(s)/Patent Under Reexamination
	12056651	PATEL ET AL.
	Examiner	**Art Unit**
	ERIC MESSERSMITH	3735

CPC- SEARCHED

Symbol	Date	Examiner

CPC COMBINATION SETS - SEARCHED

Symbol	Date	Examiner

US CLASSIFICATION SEARCHED

Class	Subclass	Date	Examiner
600	300, 365		

SEARCH NOTES

Search Notes	Date	Examiner
Inventor search (see EAST search history)	06/20/2011	EJM
EAST Search (see attached)	06/20/2011	EJM
STIC PLUS Search	12/12/2011	EJM
Updated Keyword Search in EAST	12/12/2011	EJM
Updated Seach	1/14/2014	EJM

INTERFERENCE SEARCH

US Class/ CPC Symbol	US Subclass / CPC Group	Date	Examiner

PTO/SB/30EFS (07-09)
Approved for use through 07/31/2012. OMB 0651-0031
U.S. Patent and Trademark Office; U.S. DEPARTMENT OF COMMERCE
Under the Paperwork Reduction Act of 1995, no persons are required to respond to a collection of information unless it contains a valid OMB control number.

REQUEST FOR CONTINUED EXAMINATION(RCE)TRANSMITTAL
(Submitted Only via EFS-Web)

Application Number	12056651	Filing Date	2008-03-27	Docket Number (if applicable)	P25732 US	Art Unit	3735
First Named Inventor	Himanshu Patel			Examiner Name	Messersmith, Eric		

This is a Request for Continued Examination (RCE) under 37 CFR 1.114 of the above-identified application.
Request for Continued Examination (RCE) practice under 37 CFR 1.114 does not apply to any utility or plant application filed prior to June 8, 1995, or to any design application. The Instruction Sheet for this form is located at WWW.USPTO.GOV

SUBMISSION REQUIRED UNDER 37 CFR 1.114

Note: If the RCE is proper, any previously filed unentered amendments and amendments enclosed with the RCE will be entered in the order in which they were filed unless applicant instructs otherwise. If applicant does not wish to have any previously filed unentered amendment(s) entered, applicant must request non-entry of such amendment(s).

☐ Previously submitted. If a final Office action is outstanding, any amendments filed after the final Office action may be considered as a submission even if this box is not checked.

- ☐ Consider the arguments in the Appeal Brief or Reply Brief previously filed on _____
- ☐ Other _____

☒ Enclosed

- ☒ Amendment/Reply
- ☐ Information Disclosure Statement (IDS)
- ☐ Affidavit(s)/ Declaration(s)
- ☐ Other _____

MISCELLANEOUS

☐ Suspension of action on the above-identified application is requested under 37 CFR 1.103(c) for a period of months _____
(Period of suspension shall not exceed 3 months; Fee under 37 CFR 1.17(i) required)

☐ Other _____

FEES

The RCE fee under 37 CFR 1.17(e) is required by 37 CFR 1.114 when the RCE is filed.
☒ The Director is hereby authorized to charge any underpayment of fees, or credit any overpayments, to Deposit Account No 500621

SIGNATURE OF APPLICANT, ATTORNEY, OR AGENT REQUIRED

☒ Patent Practitioner Signature
☐ Applicant Signature

PTO/SB/30EFS (07-09)
Approved for use through 07/31/2012. OMB 0651-0031
U.S. Patent and Trademark Office; U.S. DEPARTMENT OF COMMERCE

Under the Paperwork Reduction Act of 1995, no persons are required to respond to a collection of information unless it contains a valid OMB control number.

Signature of Registered U.S. Patent Practitioner			
Signature	/Konrad Chan/	Date (YYYY-MM-DD)	2012-03-21
Name	Konrad Chan	Registration Number	57857

This collection of information is required by 37 CFR 1.114. The information is required to obtain or retain a benefit by the public which is to file (and by the USPTO to process) an application. Confidentiality is governed by 35 U.S.C. 122 and 37 CFR 1.11 and 1.14. This collection is estimated to take 12 minutes to complete, including gathering, preparing, and submitting the completed application form to the USPTO. Time will vary depending upon the individual case. Any comments on the amount of time you require to complete this form and/or suggestions for reducing this burden, should be sent to the Chief Information Officer, U.S. Patent and Trademark Office, U.S. Department of Commerce, P.O. Box 1450, Alexandria, VA 22313-1450.

If you need assistance in completing the form, call 1-800-PTO-9199 and select option 2.

Privacy Act Statement

The Privacy Act of 1974 (P.L. 93-579) requires that you be given certain information in connection with your submission of the attached form related to a patent application or patent. Accordingly, pursuant to the requirements of the Act, please be advised that: (1) the general authority for the collection of this information is 35 U.S.C. 2(b)(2); (2) furnishing of the information solicited is voluntary; and (3) the principal purpose for which the information is used by the U.S. Patent and Trademark Office is to process and/or examine your submission related to a patent application or patent. If you do not furnish the requested information, the U.S. Patent and Trademark Office may not be able to process and/or examine your submission, which may result in termination of proceedings or abandonment of the application or expiration of the patent.

The information provided by you in this form will be subject to the following routine uses:

1. The information on this form will be treated confidentially to the extent allowed under the Freedom of Information Act (5 U.S.C. 552) and the Privacy Act (5 U.S.C. 552a). Records from this system of records may be disclosed to the Department of Justice to determine whether the Freedom of Information Act requires disclosure of these records.

2. A record from this system of records may be disclosed, as a routine use, in the course of presenting evidence to a court, magistrate, or administrative tribunal, including disclosures to opposing counsel in the course of settlement negotiations.

3. A record in this system of records may be disclosed, as a routine use, to a Member of Congress submitting a request involving an individual, to whom the record pertains, when the individual has requested assistance from the Member with respect to the subject matter of the record.

4. A record in this system of records may be disclosed, as a routine use, to a contractor of the Agency having need for the information in order to perform a contract. Recipients of information shall be required to comply with the requirements of the Privacy Act of 1974, as amended, pursuant to 5 U.S.C. 552a(m).

5. A record related to an International Application filed under the Patent Cooperation Treaty in this system of records may be disclosed, as a routine use, to the International Bureau of the World Intellectual Property Organization, pursuant to the Patent Cooperation Treaty.

6. A record in this system of records may be disclosed, as a routine use, to another federal agency for purposes of National Security review (35 U.S.C. 181) and for review pursuant to the Atomic Energy Act (42 U.S.C. 218(c)).

7. A record from this system of records may be disclosed, as a routine use, to the Administrator, General Services, or his/her designee, during an inspection of records conducted by GSA as part of that agency's responsibility to recommend improvements in records management practices and programs, under authority of 44 U.S.C. 2904 and 2906. Such disclosure shall be made in accordance with the GSA regulations governing inspection of records for this purpose, and any other relevant (i.e., GSA or Commerce) directive. Such disclosure shall not be used to make determinations about individuals.

8. A record from this system of records may be disclosed, as a routine use, to the public after either publication of the application pursuant to 35 U.S.C. 122(b) or issuance of a patent pursuant to 35 U.S.C. 151. Further, a record may be disclosed, subject to the limitations of 37 CFR 1.14, as a routine use, to the public if the record was filed in an application which became abandoned or in which the proceedings were terminated and which application is referenced by either a published application, an application open to public inspections or an issued patent.

9. A record from this system of records may be disclosed, as a routine use, to a Federal, State, or local law enforcement agency, if the USPTO becomes aware of a violation or potential violation of law or regulation.

Electronic Patent Application Fee Transmittal

Application Number:	12056651
Filing Date:	27-Mar-2008
Title of Invention:	GLUCOSE SENSOR TRANSCEIVER
First Named Inventor/Applicant Name:	Himanshu Patel
Filer:	Konrad K. Chan
Attorney Docket Number:	P25732 US

Filed as Large Entity

Utility under 35 USC 111(a) Filing Fees

Description	Fee Code	Quantity	Amount	Sub-Total in USD($)
Basic Filing:				
Pages:				
Claims:				
Miscellaneous-Filing:				
Petition:				
Patent-Appeals-and-Interference:				
Post-Allowance-and-Post-Issuance:				
Extension-of-Time:				

Description	Fee Code	Quantity	Amount	Sub-Total in USD($)
Miscellaneous:				
Request for continued examination	1801	1	930	930
		Total in USD ($)		**930**

Electronic Acknowledgement Receipt

EFS ID:	12363143
Application Number:	12056651
International Application Number:	
Confirmation Number:	9941
Title of Invention:	GLUCOSE SENSOR TRANSCEIVER
First Named Inventor/Applicant Name:	Himanshu Patel
Customer Number:	23608
Filer:	Konrad K. Chan
Filer Authorized By:	
Attorney Docket Number:	P25732 US
Receipt Date:	21-MAR-2012
Filing Date:	27-MAR-2008
Time Stamp:	19:22:14
Application Type:	Utility under 35 USC 111(a)

Payment information:

Submitted with Payment	yes
Payment Type	Deposit Account
Payment was successfully received in RAM	$930
RAM confirmation Number	6746
Deposit Account	500621
Authorized User	

The Director of the USPTO is hereby authorized to charge indicated fees and credit any overpayment as follows:

Charge any Additional Fees required under 37 C.F.R. Section 1.16 (National application filing, search, and examination fees)

Charge any Additional Fees required under 37 C.F.R. Section 1.17 (Patent application and reexamination processing fees)

Charge any Additional Fees required under 37 C.F.R. Section 1.19 (Document supply fees)

Charge any Additional Fees required under 37 C.F.R. Section 1.20 (Post Issuance fees)

Charge any Additional Fees required under 37 C.F.R. Section 1.21 (Miscellaneous fees and charges)

File Listing:

Document Number	Document Description	File Name	File Size(Bytes)/ Message Digest	Multi Part /.zip	Pages (if appl.)
1		P25732_US_2012-03-22_Response_to_FOA.pdf	58839 4ec0ed4d6b7c0c0955358c2665d843cb953ec374	yes	13
	Multipart Description/PDF files in .zip description				
	Document Description		**Start**	**End**	
	Amendment Submitted/Entered with Filing of CPA/RCE		1	1	
	Claims		2	7	
	Applicant Arguments/Remarks Made in an Amendment		8	13	
Warnings:					
Information:					
2	Request for Continued Examination (RCE)	P25732_US_2012-03-21_RCE_sb0030e_fill.pdf	697966 653aa2a22401e65d5186697581600d56f67b57c4	no	3
Warnings:					
Information:					
3	Fee Worksheet (SB06)	fee-info.pdf	30217 f6b5f4de8a10786ec70202b30e450372e4e8419d	no	2
Warnings:					
Information:					
		Total Files Size (in bytes):	787022		

This Acknowledgement Receipt evidences receipt on the noted date by the USPTO of the indicated documents, characterized by the applicant, and including page counts, where applicable. It serves as evidence of receipt similar to a Post Card, as described in MPEP 503.

New Applications Under 35 U.S.C. 111
If a new application is being filed and the application includes the necessary components for a filing date (see 37 CFR 1.53(b)-(d) and MPEP 506), a Filing Receipt (37 CFR 1.54) will be issued in due course and the date shown on this Acknowledgement Receipt will establish the filing date of the application.

National Stage of an International Application under 35 U.S.C. 371
If a timely submission to enter the national stage of an international application is compliant with the conditions of 35 U.S.C. 371 and other applicable requirements a Form PCT/DO/EO/903 indicating acceptance of the application as a national stage submission under 35 U.S.C. 371 will be issued in addition to the Filing Receipt, in due course.

New International Application Filed with the USPTO as a Receiving Office
If a new international application is being filed and the international application includes the necessary components for an international filing date (see PCT Article 11 and MPEP 1810), a Notification of the International Application Number and of the International Filing Date (Form PCT/RO/105) will be issued in due course, subject to prescriptions concerning national security, and the date shown on this Acknowledgement Receipt will establish the international filing date of the application.

IN THE UNITED STATES PATENT AND TRADEMARK OFFICE

In re Utility Application of: Himanshu Patel	)	Group Art Unit: 3735
Serial No.: 12/056,651	)	Examiner: MESSERSMITH, ERIC
Filed: March 27, 2008	)	Confirmation No.: 9941
For: GLUCOSE SENSOR TRANSCEIVER	)	Attorney Docket No.: P25732 US
	)	Date: March 21, 2012

AMENDMENT

Commissioner for Patents
P.O. Box 1450
Alexandria, VA 22313-1450

Sir:

The present Amendment is filed on March 21, 2012 in response to the Final Office Action mailed on December 22, 2011 for the above-identified application. Please enter and consider the following amendment and remarks.

Amendments to the Claims are reflected in the listing of claims which begins on page 2 of this paper. This listing of claims will replace all prior versions.

Remarks begin on page 8 of this paper.

AMENDMENTS TO THE CLAIMS:

The following is a complete listing of the claims.

1. (Currently amended) A telemetered characteristic sensor transceiver for exchanging data with ~~at least one~~ a synchronous remote device and ~~at least one~~ an asynchronous remote device, the transceiver comprising:

a transceiver housing detachably coupled to a sensor located on a body of a user, the sensor producing a signal indicative of a user characteristic, the sensor being affixed to the user with a single adhesive tape;

a processor formed within the transceiver housing and in communication with the sensor for processing the signal produced by the sensor;

a transmitter coupled to the processor for transmitting data to the ~~at least one~~ synchronous remote device and the asynchronous remote device;

a receiver coupled to the processor for receiving data from the ~~at least one~~ synchronous remote device and the asynchronous remote device; and

a memory coupled to the processor for storing data,

wherein a transceiver housing coupled to a sensor affixed to the user remains in a fixed position supported by the single adhesive tape, the processor performs calculations using at least one of the signal produced by the sensor, the data received from [[the]] at least one of the synchronous remote device or the asynchronous remote device and the data stored in the memory, the processor further performs at least one of storing the calculations in the memory and transmitting the calculations to [[the]] at least one of the synchronous remote device or the asynchronous remote device through the transmitter.

2. (Original) The transceiver of claim 1, wherein the transceiver exchanges data with a plurality of remote devices in a network structure.

3. (Canceled) The transceiver of claim 1, wherein the transceiver exchanges data with the at least one remote device in a synchronous manner.

4. (Original) The transceiver of claim 1, wherein the transceiver wakes up from a sleep mode prior to exchanging data with the at least one remote device.

5. (Original) The transceiver of claim 4, wherein the at least one remote device wakes up the transceiver.

6. (Original) The transceiver of claim 5, further comprising an ultrasonic sensor for receiving an ultrasonic signal from the at least one remote device when the at least one remote device transmits the ultrasonic signal to the transceiver to wake up the transceiver.

7. (Original) The transceiver of claim 4, wherein the transceiver periodically wakes up independent of the at least one remote device.

8. (Canceled) The transceiver of claim 1, wherein the transceiver exchanges data with the at least one remote device in an asynchronous manner.

9. (Original) The transceiver of claim 8, wherein the data exchanged in the

asynchronous manner comprises at least one of: a blood glucose value; and a request for glucose history data.

10. (Original) The transceiver of claim 1, wherein the data exchanged between the transceiver and the at least one remote device comprises at least one of: device configuration data; communication link configuration data; adaptive communication configuration data; glucose history data; and calibration data.

11. (Original) The transceiver of claim 10, wherein the device configuration data comprises at least one of: a device identification; user information; and time information.

12. (Original) The transceiver of claim 10, wherein the communication link configuration data comprises at least one of: a communication rate; frequency information; and frequency hopping configuration information.

13. (Original) The transceiver of claim 10, wherein the glucose history data is exchanged according to a time interval.

14. (Original) The transceiver of claim 10, wherein the calibration data comprises at least one of: sensor initialization sequence and configuration information; and dynamic sensor initialization parameters.

15. (Original) The transceiver of claim 1, wherein the processor calculates sensor

glucose values using at least one of the signal received from the sensor, the data received from the at least one remote device and the data stored in the memory.

16. (Original) The transceiver of claim 15, wherein a rate of exchanging data between the transceiver and the at least one remote device is dynamically changed depending on a characteristic of the calculated sensor glucose values.

17. (Original) The transceiver of claim 15, wherein a glucose calculation algorithm for calculating the sensor glucose values is stored in the memory.

18. (Original) The transceiver of claim 15, wherein the processor stores the calculated sensor glucose values in the memory or transmits the calculated sensor glucose values to the at least one remote device through the transmitter.

19. (Original) The transceiver of claim 18, wherein the calculated sensor glucose values are secured via an encryption scheme before transmission to the at least one remote device.

20. (Original) The transceiver of claim 15, wherein the receiver receives calibration data from the at least one remote device and the processor stores the received calibration data in the memory.

21. (Original) The transceiver of claim 20, wherein the processor performs a calibration using at least one of the calibration data stored in the memory, the signal received from the

sensor and the calculated glucose sensor values.

22. (Original) The transceiver of claim 21, wherein a calibration algorithm for performing the calibration is stored in the memory.

23. (Original) The transceiver of claim 1, further comprising a display for displaying information processed by the processor.

24. (Currently amended) A telemetered characteristic sensor transceiver for exchanging data with a synchronous remote device and an asynchronous remote device, the transceiver comprising:

a transceiver housing detachably coupled to a sensor located on a body of a user, the sensor producing a signal indicative of a user characteristic;

a processor formed within the transceiver housing and in communication with the sensor for processing the signal produced by the sensor;

a transmitter coupled to the processor for transmitting data to the synchronous remote device and the asynchronous remote device;

a receiver coupled to the processor for receiving data from at the synchronous remote device and the asynchronous remote device; and

a memory coupled to the processor for storing data,

wherein the processor performs calculations using at least one of the signal produced by the sensor, the data received from at least one of the synchronous remote device or the asynchronous remote device and the data stored in the memory, the processor further performs at

least one of storing the calculations in the memory and transmitting the calculations to at least one of the synchronous remote device or the asynchronous remote device through the transmitter, [[The]] the transceiver ~~of claim 1,~~ further comprising means for notifying the user that the at least one remote device is beyond a certain distance from the transceiver.

25. (Original) The transceiver of claim 1, wherein a power for exchanging data between the transceiver and the at least one remote device is dynamically changed depending on a strength of a detected signal between the transceiver and the at least one remote device.

26. (Original) The transceiver of claim 1, wherein a rate of exchanging data between the transceiver and the at least one remote device is dynamically changed depending on a power mode of at least one of the transceiver and the at least one remote device.

27. (Original) The transceiver of claim 1, wherein the housing is capable of detaching from the sensor and attaching to the at least one remote device.

28. (Original) The transceiver of claim 1, wherein the processor communicates with the sensor via wireless means.

29. (Original) The transceiver of claim 1, wherein the housing comprises a single communication port for facilitating at least two of: communication between the transceiver and the sensor; communication between the transceiver and the at least one remote device; and an electrical connection between the transceiver and a battery charger.

REMARKS

Applicants thank the Examiner for the careful review of the as-filed application and Final Office Action mailed on December 22, 2011. It is submitted that after entry of the present amendments, the application is in condition for allowance over the references cited in the Office Action. The amendments to the claim do not introduce new subject matter because support for the amendments is found in the as-filed application. Reconsideration of all of the pending claims in view of the amendment and remarks is respectfully requested.

Rejections based on 35 U.S.C. § 102

Claims 1-3, 10-12, 14-18, 20-23, and 27-29 were rejected under 35 U.S.C. § 102(b) as being anticipated by U.S. Patent Application Publication No. 2006/183,985 by Brister et al. (hereinafter "Brister"). Applicants respectfully traverse this rejection.

Applicants have amended independent claims 1and 24 to further define the claimed subject matter. Applicants have folded originally filed dependent claims 3 and 8 into independent claim 1. Similarly, elements of independent claim 1 were added to previously dependent claim 24. Accordingly, after entry of the present amendment independent claims 1 and 24 recite that the sensor transceiver includes a transmitter to transmit data to the synchronous remote device and the asynchronous remote device. The sensor transceiver further includes a receiver to receive data from the synchronous remote device and the asynchronous remote device. Support for this amendment is found within the as-filed specification and claims.

After entry of the present amendment, Applicants submit that Brister fails to teach or

suggest all of the amended claim features. Specifically, Applicants believe the cited portions of Brister fail to teach or suggest the claimed transceiver that includes a transmitter and receiver to send and receive data from both a synchronous and asynchronous remote device. Applicants note that the Office cited the combination of Brister and U.S. Patent Publication 2009/0076359 by Reggiardo et al. (hereinafter "Reggiardo") as teaching asynchronous data communications. Applicants respectfully submit that combination of Brister and Reggiardo is improper because the combination contravenes MPEP 2143.01 V which states that the proposed modification cannot render the prior art unsatisfactory for its intended purpose.

MPEP 2143.01 V states, "If proposed modification would render the prior art invention being modified unsatisfactory for its intended purpose, then there is no suggestion or motivation to make the proposed modification." *In re Gordon*, 733 F.2d 900, 221 USPQ 1125 (Fed. Cir. 1984). Applicants submit that the intended purpose of Brister is to perform continuous monitoring as evidenced in paragraph [0516] of Brister and throughout the Brister specification. Brister further specifies that data is acquired in " substantially real-time" in paragraphs [0556], [0568] and [0587]. Accordingly, Applicants submit that modifying Brister to perform asynchronous data communications as taught by Reggiardo would render Brister unsatisfactory for the intended purpose of "substantially real time" continuous monitoring.

Similarly, Applicants submit that the combination of Brister and Reggiardo contravenes MPEP 2143.01 VI that states, "If the proposed modification or combination of the prior art would change the principle of operation of the prior art invention being modified, then the teachings of the references are not sufficient to render the claims *prima facie* obvious." *In re Ratti*, 270 F.2d 810, 123 USPQ 349 (CCPA 1959). As discussed above, Applicants submit that the asynchronous communications of Reggiardo would change the principle of operation of

Brister in violation of MPEP 2143.01 VI.

Accordingly, Applicants respectfully submit that amended independent claim 1 is in a condition of allowance and request withdrawal of the 35 U.S.C. § 102(b) rejection based on Brister. Similarly, Applicants submit that the remaining claims that depend directly or indirectly from claim 1 are similarly in a condition of allowance for at least the same reasons discussed above.

Rejections based on 35 U.S.C. § 103

Dependent claims 4-5 and 7 were rejected under 35 U.S.C. § 103(a) as being unpatentable over Brister in view of U.S. Patent Publication No. 2003/0130616 by Steil et al. (hereinafter "Steil").

Applicants submit that after entry of the present amendment dependent claims 4, 5 and 17are patentably distinguishable from the combination of Brister and Steil for at least the reasons discussed above regarding the 35 U.S.C. § 102 rejection of independent claim 1, from which claims 4, 5 and 17 depend.

Dependent claims 8 and 9 were rejected under 35 U.S.C. § 103(a) as being unpatentable over Brister in view of U.S. Patent Publication No. 2009/0076358 by Reggiardo et al. (hereinafter "Reggiardo").

Applicants submit that after entry of the present amendment dependent claims 8 and 9 are patentably distinguishable from the combination of Brister and Reggiardo for at least the reasons discussed above regarding the 35 U.S.C. § 102 rejection of independent claim 1, from which claims 8 and 9 depend. Applicants further submit that the combination of Brister and Reggiardo

is improper for at least the previously discussed reasons.

Dependent claim 19 was rejected under 35 U.S.C. § 103(a) as being unpatentable over Brister in view of U.S. Patent Publication no. 2007/0197878 by Shklarski (hereinafter "Shklarksi").

Applicants submit that after entry of the present amendment dependent claim 19 is patentably distinguishable from the combination of Brister and Shklarski for at least the reasons discussed above regarding independent claim 1 from which claim 19 depends.

Dependent claim 24 was rejected under 35 U.S.C. § 103(a) as being unpatentable over Brister in view of U.S. Patent Publication no. 2004/0176667 by Mihai et al. (hereinafter "Mihai").

Applicants respectfully request further clarification regarding paragraph [0429] of Mihai that states,

> As explained above, when the alarm or alert condition is indicated on the clinician's digital assistant at block 1530, this indication may be provided visually, audibly or both. When an audible indication is provided at the clinician's digital assistant 118, the alarm icon 4872 appears on the display 118a of the clinician's digital assistant 118. If an audible indication is provided, the clinician may have the ability to mute the audible indication even though the clinician has not responded to the alarm or alert condition. If the clinician does silence the alarm, the server 109 will initiate a silence timer. The visual indication will remain even though the audible indication has been muted. As shown in FIG. 16a, if an alarm/alert would be providing an audible indication at the clinician's digital assistant 118 but for the muting by the clinician, a muted alarm/alert icon 4874 is provided. Further, upon escalation of the alarm/alert condition, if the clinician does not respond to the alarm within the timer limit, the muting of the audible indication may be disengaged. An alternate embodiment of the audible indication may be a vibration alert.

Applicants respectfully submit that paragraph cited above fails to teach or suggest the claimed

subject matter of notifying the user that at least one remote device is beyond a certain distance from the transceiver. As understood by Applicants, the cited portions of Mihai seems to address muting or silencing alarms but certainly does not address distance of a transceiver from a remote device.

Accordingly, Applicants submit that after entry of the present amendment dependent claim 24 is patentably distinguishable from the combination of Brister and Mihai for at least the reasons discussed above regarding now independent claim 24.

Dependent claims 25 and 26 were rejected under 35 U.S.C. § 103(a) as being unpatentable over Brister in view of U.S. Patent Publication no. 2007/0255126 by Moberg et al. (hereinafter "Moberg").

Applicants submit that after entry of the present amendment dependent claims 25 and 26 are patentably distinguishable from the combination of Brister and Moberg for at least the reasons discussed above regarding independent claim 1 from which claims 25 and 26 depend.

Dependent claim 6 was rejected under 35 U.S.C. § 103(a) as being unpatentable over Brister in view of Steil and further in view of U.S. Patent Publication no. 2005/0043594 by Dinsmoor et al. (hereinafter "Dinsmoor").

Applicants submit that after entry of the present amendment dependent claim 6 is patentably distinguishable from the combination of Brister, Steil, and Dinsmoor for at least the reasons discussed above regarding independent claim 1 from which claim 6 depends.

If for any reason the Examiner finds the application other than in condition for allowance,

the Examiner is invited to call the undersigned attorney at (818) 576-4330 should the Examiner believe a telephone interview would advance the prosecution of the application.

The Commissioner is hereby authorized to charge any additional fees which may be required regarding this application under 37 C.F.R. §§ 1.16-1.17, or credit any overpayment, to Deposit Account No. 50-0621. Should no proper payment be enclosed herewith, as by a check or credit card payment form being in the wrong amount, unsigned, post-dated, otherwise improper or informal or even entirely missing, the Commissioner is authorized to charge the unpaid amount to Deposit Account No. 50-0621. If any extensions of time are needed for timely acceptance of papers submitted herewith, Applicant hereby petitions for such extensions under 37 C.F.R. § 1.136 and authorizes payment of any such extensions fees to Deposit Account No. 50-0621.

Respectfully submitted,

Dated: March 21, 2012

By: /Konrad Chan/

Konrad K. Chan
Reg. No. 57,857

Medtronic MiniMed, Inc.
18000 Devonshire Street
Northridge, CA 91325-1219
Telephone: (818) 576-4330
Facsimile: (818) 576-6202

PTO/SB/06 (07-06)
Approved for use through 1/31/2007. OMB 0651-0032
U.S. Patent and Trademark Office; U.S. DEPARTMENT OF COMMERCE
Under the Paperwork Reduction Act of 1995, no persons are required to respond to a collection of information unless it displays a valid OMB control number.

PATENT APPLICATION FEE DETERMINATION RECORD

Substitute for Form PTO-875

Application or Docket Number	Filing Date	☐ To be Mailed
12/056,651	03/27/2008	

APPLICATION AS FILED – PART I

FOR	(Column 1) NUMBER FILED	(Column 2) NUMBER EXTRA	SMALL ENTITY ☐ RATE ($)	SMALL ENTITY FEE ($)	OR	OTHER THAN SMALL ENTITY RATE ($)	OTHER THAN SMALL ENTITY FEE ($)
☐ BASIC FEE (37 CFR 1.16(a), (b), or (c))	N/A	N/A	N/A			N/A	
☐ SEARCH FEE (37 CFR 1.16(k), (i), or (m))	N/A	N/A	N/A			N/A	
☐ EXAMINATION FEE (37 CFR 1.16(o), (p), or (q))	N/A	N/A	N/A			N/A	
TOTAL CLAIMS (37 CFR 1.16(i))	minus 20 =	*	X $ =		OR	X $ =	
INDEPENDENT CLAIMS (37 CFR 1.16(h))	minus 3 =	*	X $ =			X $ =	
☐ APPLICATION SIZE FEE (37 CFR 1.16(s))	If the specification and drawings exceed 100 sheets of paper, the application size fee due is $250 ($125 for small entity) for each additional 50 sheets or fraction thereof. See 35 U.S.C. 41(a)(1)(G) and 37 CFR 1.16(s).						
☐ MULTIPLE DEPENDENT CLAIM PRESENT (37 CFR 1.16(j))							
* If the difference in column 1 is less than zero, enter "0" in column 2.			TOTAL			TOTAL	

APPLICATION AS AMENDED – PART II

AMENDMENT 03/21/2012

	(Column 1) CLAIMS REMAINING AFTER AMENDMENT		(Column 2) HIGHEST NUMBER PREVIOUSLY PAID FOR	(Column 3) PRESENT EXTRA	SMALL ENTITY RATE ($)	SMALL ENTITY ADDITIONAL FEE ($)	OR	OTHER THAN SMALL ENTITY RATE ($)	OTHER THAN SMALL ENTITY ADDITIONAL FEE ($)
Total (37 CFR 1.16(i))	* 27	Minus	** 29	= 0	X $ =		OR	X $60=	0
Independent (37 CFR 1.16(h))	* 2	Minus	***3	= 0	X $ =		OR	X $250=	0
☐ Application Size Fee (37 CFR 1.16(s))									
☐ FIRST PRESENTATION OF MULTIPLE DEPENDENT CLAIM (37 CFR 1.16(j))							OR		
					TOTAL ADD'L FEE		OR	TOTAL ADD'L FEE	0

AMENDMENT

	(Column 1) CLAIMS REMAINING AFTER AMENDMENT		(Column 2) HIGHEST NUMBER PREVIOUSLY PAID FOR	(Column 3) PRESENT EXTRA	RATE ($)	ADDITIONAL FEE ($)		RATE ($)	ADDITIONAL FEE ($)
Total (37 CFR 1.16(i))	*	Minus	**	=	X $ =		OR	X $ =	
Independent (37 CFR 1.16(h))	*	Minus	***	=	X $ =		OR	X $ =	
☐ Application Size Fee (37 CFR 1.16(s))									
☐ FIRST PRESENTATION OF MULTIPLE DEPENDENT CLAIM (37 CFR 1.16(j))							OR		
					TOTAL ADD'L FEE		OR	TOTAL ADD'L FEE	

* If the entry in column 1 is less than the entry in column 2, write "0" in column 3.
** If the "Highest Number Previously Paid For" IN THIS SPACE is less than 20, enter "20".
*** If the "Highest Number Previously Paid For" IN THIS SPACE is less than 3, enter "3".
The "Highest Number Previously Paid For" (Total or Independent) is the highest number found in the appropriate box in column 1.

Legal Instrument Examiner:
/DORRETTA BROOKS/

This collection of information is required by 37 CFR 1.16. The information is required to obtain or retain a benefit by the public which is to file (and by the USPTO to process) an application. Confidentiality is governed by 35 U.S.C. 122 and 37 CFR 1.14. This collection is estimated to take 12 minutes to complete, including gathering, preparing, and submitting the completed application form to the USPTO. Time will vary depending upon the individual case. Any comments on the amount of time you require to complete this form and/or suggestions for reducing this burden, should be sent to the Chief Information Officer, U.S. Patent and Trademark Office, U.S. Department of Commerce, P.O. Box 1450, Alexandria, VA 22313-1450. DO NOT SEND FEES OR COMPLETED FORMS TO THIS ADDRESS. **SEND TO: Commissioner for Patents, P.O. Box 1450, Alexandria, VA 22313-1450.**
If you need assistance in completing the form, call 1-800-PTO-9199 and select option 2.

UNITED STATES PATENT AND TRADEMARK OFFICE

UNITED STATES DEPARTMENT OF COMMERCE
United States Patent and Trademark Office
Address: COMMISSIONER FOR PATENTS
P.O. Box 1450
Alexandria, Virginia 22313-1450
www.uspto.gov

APPLICATION NO.	FILING DATE	FIRST NAMED INVENTOR	ATTORNEY DOCKET NO.	CONFIRMATION NO.
12/056,651	03/27/2008	Himanshu Patel	P25732 US	9941

23608 7590 12/22/2011
MEDTRONIC MINIMED INC.
18000 DEVONSHIRE STREET
NORTHRIDGE, CA 91325-1219

EXAMINER
MESSERSMITH, ERIC

ART UNIT	PAPER NUMBER
3735	

NOTIFICATION DATE	DELIVERY MODE
12/22/2011	ELECTRONIC

Please find below and/or attached an Office communication concerning this application or proceeding.

The time period for reply, if any, is set in the attached communication.

Notice of the Office communication was sent electronically on above-indicated "Notification Date" to the following e-mail address(es):

medtronic_diabetes_docketing@cardinal-ip.com
rs.docketingus@medtronic.com

Office Action Summary	Application No.	Applicant(s)	
	12/056,651	PATEL ET AL.	
	Examiner	Art Unit	
	ERIC MESSERSMITH	3735	

-- The MAILING DATE of this communication appears on the cover sheet with the correspondence address --

Period for Reply

A SHORTENED STATUTORY PERIOD FOR REPLY IS SET TO EXPIRE 3 MONTH(S) OR THIRTY (30) DAYS, WHICHEVER IS LONGER, FROM THE MAILING DATE OF THIS COMMUNICATION.

- Extensions of time may be available under the provisions of 37 CFR 1.136(a). In no event, however, may a reply be timely filed after SIX (6) MONTHS from the mailing date of this communication.
- If NO period for reply is specified above, the maximum statutory period will apply and will expire SIX (6) MONTHS from the mailing date of this communication.
- Failure to reply within the set or extended period for reply will, by statute, cause the application to become ABANDONED (35 U.S.C. § 133). Any reply received by the Office later than three months after the mailing date of this communication, even if timely filed, may reduce any earned patent term adjustment. See 37 CFR 1.704(b).

Status

1)☒ Responsive to communication(s) filed on *12 October 2011*.

2a)☒ This action is **FINAL**. 2b)☐ This action is non-final.

3)☐ An election was made by the applicant in response to a restriction requirement set forth during the interview on _____; the restriction requirement and election have been incorporated into this action.

4)☐ Since this application is in condition for allowance except for formal matters, prosecution as to the merits is closed in accordance with the practice under *Ex parte Quayle*, 1935 C.D. 11, 453 O.G. 213.

Disposition of Claims

5)☒ Claim(s) *1-29* is/are pending in the application.

5a) Of the above claim(s) _____ is/are withdrawn from consideration.

6)☐ Claim(s) _____ is/are allowed.

7)☒ Claim(s) *1-29* is/are rejected.

8)☐ Claim(s) _____ is/are objected to.

9)☐ Claim(s) _____ are subject to restriction and/or election requirement.

Application Papers

10)☐ The specification is objected to by the Examiner.

11)☒ The drawing(s) filed on *3/27/2008* is/are: a)☒ accepted or b)☐ objected to by the Examiner.

Applicant may not request that any objection to the drawing(s) be held in abeyance. See 37 CFR 1.85(a).

Replacement drawing sheet(s) including the correction is required if the drawing(s) is objected to. See 37 CFR 1.121(d).

12)☐ The oath or declaration is objected to by the Examiner. Note the attached Office Action or form PTO-152.

Priority under 35 U.S.C. § 119

13)☐ Acknowledgment is made of a claim for foreign priority under 35 U.S.C. § 119(a)-(d) or (f).

a)☐ All b)☐ Some * c)☐ None of:

1.☐ Certified copies of the priority documents have been received.

2.☐ Certified copies of the priority documents have been received in Application No. _____.

3.☐ Copies of the certified copies of the priority documents have been received in this National Stage application from the International Bureau (PCT Rule 17.2(a)).

* See the attached detailed Office action for a list of the certified copies not received.

Attachment(s)

1) ☐ Notice of References Cited (PTO-892)

2) ☐ Notice of Draftsperson's Patent Drawing Review (PTO-948)

3) ☒ Information Disclosure Statement(s) (PTO/SB/08) Paper No(s)/Mail Date *3/5/2010*.

4) ☐ Interview Summary (PTO-413) Paper No(s)/Mail Date. _____ .

5) ☐ Notice of Informal Patent Application

6) ☐ Other: _____.

DETAILED ACTION

Claim Rejections - 35 USC § 102

1. The following is a quotation of the appropriate paragraphs of 35 U.S.C. 102 that form the basis for the rejections under this section made in this Office action:

> A person shall be entitled to a patent unless –
>
> (b) the invention was patented or described in a printed publication in this or a foreign country or in public use or on sale in this country, more than one year prior to the date of application for patent in the United States.

2. **Claims 1-3, 10-12, 14-18, 20-23 and 27-29 are rejected under 35 U.S.C. 102(b) as being anticipated by US 2006/083985 A1 to Brister et al. (hereinafter "Brister").**

As to claim 1, Brister discloses a telemetered characteristic sensor transceiver (158) for exchanging data with at least one remote device, the transceiver comprising:

a transceiver housing detachably coupled to a sensor located on a body of a user, the sensor producing a signal indicative of a user characteristic (para [0503]; Fig 15 -- receiver 158 may be a wired connection which is inherently detachably coupled to glucose sensor), the sensor being affixed to the user with a single adhesive tape (see para [0271]; Fig 14B, element 9);

a processor formed within the transceiver housing and in communication with the sensor for processing the signal produced by the sensor (see Fig 17A, element 176);

a transmitter coupled to the processor for transmitting data to at least one remote device; a receiver coupled to the processor for receiving data from the at least one remote device (see Fig 17A, element 178); and

a memory coupled to the processor for storing data (see para [0508]--flash memory),

wherein a transceiver housing coupled to a sensor affixed to the user remains in a fixed position supported by the single adhesive tape (see para [0503] -- the wired connection at least affixes the transceiver housing to the body within a limited range, such as the radius of the wire, via the wire and the adhesive on the sensor), the processor further performs calculations using at least one of the signal produced by the sensor (para [507] – "input module 174 sends the [sensor] data stream to a processor 176 that processes the data stream…"), the data received from the at least one remote device and the data stored in the memory (see para [0508]), and performs at least one of storing the calculations in the memory (para [0508] -- sensor data is stored prior to be compared and/or analyzed) and transmitting the calculations to the at least one remote device through the transmitter.

As to claim 2, Brister further discloses wherein the transceiver exchanges data with a plurality of remote devices in a network structure (see para [0514]).

As to claim 3, Brister further discloses wherein the transceiver exchanges data with the at least one remote device in a synchronous manner (see para [0507]).

As to claim 10, Brister further discloses wherein the data exchanged between the transceiver and the at least one remote device comprises at least one of: device configuration data; communication link configuration data; adaptive communication configuration data; glucose history data; and calibration data (para [0485]).

As to claim 11, Brister further discloses wherein the device configuration data comprises at least one of: a device identification; user information; and time information (para [0484] – "sensor manufacture").

As to claim 12, Brister further discloses wherein the communication link configuration data comprises at least one of: a communication rate; frequency information; and frequency hopping configuration information (see para [0477] --"In some embodiments, a second quartz crystal 154 provides the time base for the RF carrier frequency used for data transmissions from the RF transceiver.”).

As to claim 14, Brister further discloses wherein the calibration data comprises at least one of: sensor initialization sequence and configuration information; and dynamic sensor initialization parameters (para [0488]).

As to claim 15, Brister further discloses wherein the processor calculates sensor glucose values using at least one of the signal received from the sensor, the data received from the at least one remote device and the data stored in the memory (para [0522] to [0523]).

As to claim 16, Brister further discloses wherein a rate of exchanging data between the transceiver and the at least one remote device is dynamically changed depending on a characteristic of the calculated sensor glucose values (see para [0530] – “If the data is not within the predetermined threshold, then the receiver can be configured to request additional reference analyte data.”).

As to claim 17, Brister further discloses wherein a glucose calculation algorithm for calculating the sensor glucose values is stored in the memory (see para [0523] – “The sensor data point(s) can be smoothed (filtered) in certain embodiments using a filter, for example, a finite impulse response (FIR) or infinite impulse response (IIR) filter.”).

As to claim 18, Brister further discloses wherein the processor stores the calculated sensor glucose values in the memory or transmits the calculated sensor glucose values to the at least one remote device through the transmitter (para [0514]).

As to claim 20, Brister further discloses wherein the receiver receives calibration data from the at least one remote device and the processor stores the received calibration data in the memory. (see para [0524] and [0529])– reference data can come from another monitor).

As to claim 21, Brister further discloses wherein the processor performs a calibration using at least one of the calibration data stored in the memory, the signal received from the sensor and the calculated glucose sensor values (para [0529]).

As to claim 22, Brister further discloses wherein a calibration algorithm for performing the calibration is stored in the memory (see para [0521]).

As to claim 23, Brister further discloses comprising a display for displaying information processed by the processor (Fig 15, element 170).

As to claim 27, Brister further discloses wherein the housing is capable of detaching from the sensor and attaching to the at least one remote device (para [0514] – wired connection to external device 180).

As to claim 28, Brister further discloses wherein the processor communicates with the sensor via wireless means (para [0503]).

As to claim 29, Brister further discloses wherein the housing comprises a single communication port for facilitating at least two of: communication between the transceiver and the sensor; communication between the transceiver and the at least one remote device; and an

electrical connection between the transceiver and a battery charger (para [0520] – "a data communications port").

Claim Rejections - 35 USC § 103

3. The following is a quotation of 35 U.S.C. 103(a) which forms the basis for all obviousness rejections set forth in this Office action:

> (a) A patent may not be obtained though the invention is not identically disclosed or described as set forth in section 102 of this title, if the differences between the subject matter sought to be patented and the prior art are such that the subject matter as a whole would have been obvious at the time the invention was made to a person having ordinary skill in the art to which said subject matter pertains. Patentability shall not be negatived by the manner in which the invention was made.

The factual inquiries set forth in *Graham* v. *John Deere Co.*, 383 U.S. 1, 148 USPQ 459 (1966), that are applied for establishing a background for determining obviousness under 35 U.S.C. 103(a) are summarized as follows:

1. Determining the scope and contents of the prior art.
2. Ascertaining the differences between the prior art and the claims at issue.
3. Resolving the level of ordinary skill in the pertinent art.
4. Considering objective evidence present in the application indicating obviousness or nonobviousness.

4. **Claims 4-5 and 7 are rejected under 35 U.S.C. 103(a) as being unpatentable over Brister in view of US 2003/0130616 A1 to Steil et al. (hereinafter "Steil").**

As to claims 4-5, Brister does not disclose wherein the transceiver wakes up from a sleep mode prior to exchanging data with the at least one remote device or further wherein the at least one remote device wakes up the transceiver.

However, Steil discloses a similar device wherein a transceiver wakes up from a sleep mode prior to exchanging data with the at least one remote device (para [0328]) and further wherein the at least one remote device wakes up the transceiver (para [0328]). It would have been obvious to one of ordinary skill in the art at the time the invention was made to combine the

transceiver disclosed by Brister with the sleep mode and external device waking disclosed by Steil to conserve battery.

As to claim 7, Brister does not explicitly disclose wherein the transceiver periodically wakes up independent of the at least one remote device. However, Steil discloses wherein the transceiver periodically wakes up independent of the at least one remote device (para [0328]). It would have been obvious to one of ordinary skill in the art at the time the invention was made to combine the transceiver disclosed by Brister with the periodic waking disclosed by Steil to conserve battery.

As to claim 7, Brister does not explicitly disclose wherein the glucose history data is exchanged according to a time interval. Steil discloses wherein the glucose history data is exchanged according to a time interval (para [0328]). It would have been obvious to one of ordinary skill in the art to combine the sensor transceiver disclosed by Brister with the time interval disclosed by Steil to save battery by only periodically sending glucose history data.

5. **Claims 8-9 are rejected under 35 U.S.C. 103(a) as being unpatentable over Brister in view of US 2009/0076358 A1 to Reggiardo et al. (hereinafter "Reggiardo").**

As to claim 8, Brister does not disclose wherein the transceiver exchanges data with the at least one remote device in an asynchronous manner. However, Reggiardo teaches exchanging data with at least one remote device in an asynchronous manner (para [0033]). It would have been obvious to one of ordinary skill in the art to combine the transceiver disclosed by Brister with the asynchronous data exchange disclosed by Reggiardo, since asynchronous data exchange was well-known to require less expensive components.

As to claim 9, Reggiardo further discloses the data exchanged in the asynchronous manner comprises at least one of: a blood glucose value (para ; and a request for glucose history data (para [0037]).

6. **Claim 19 is rejected under 35 U.S.C. 103(a) as being unpatentable over Brister in view of US 2007/0197878 A1 (Shklarski).**

As to claim 19, Brister does not explicitly disclose wherein the calculated sensor glucose values are secured via an encryption scheme before transmission to the at least one remote device. Shklarski teaches encrypting sensor data before transmisstion to an at least one remote device (para [0089]). Therefore, it would have been obvious to one of ordinary skill in the art at the time the invention was made to combine the transceiver disclosed by Brister with the encryption disclosed by Shklarski to maintain patient confidentiality.

7. **Claim 24 is rejected under 35 U.S.C. 103(a) as being unpatentable over Brister in view of US 2004/0176667 A1 to Mihai et al. (hereinafter "Mihai").**

As to claim 24, Brister does not disclose means for notifying the user that the at least one remote device is beyond a certain distance from the transceiver. Mihai discloses means for notifying the user that the at least one remote device is beyond a certain distance from the transceiver (para [0429]). It would have been obvious to one of ordinary skill in the art to combine the transceiver disclosed by Brister with the alerting means disclosed by Mihai to notify the patient or another that a connection is not operable.

8. **Claims 25-26 are rejected under 35 U.S.C. 103(a) as being unpatentable over Brister in view of US 2007/0255126 A1 to Moberg et al. (hereinafter "Moberg").**

As to claim, 25 . Brister does not disclose wherein a power for exchanging data between the transceiver and the at least one remote device is dynamically changed depending on a strength of a detected signal between the transceiver and the at least one remote device. Moberg discloses wherein a power for exchanging data between the transceiver and the at least one remote device is dynamically changed depending on a strength of a detected signal between the transceiver and the at least one remote device (para [0143]). It would have been obvious to one of ordinary skill in the art to combine the transceiver disclosed by Brister with the dynamic power disclosed by Moberg to conserve battery.

As to claim 26, Brister does not disclose 26. wherein a rate of exchanging data between the transceiver and the at least one remote device is dynamically changed depending on a power mode of at least one of the transceiver and the at least one remote device. Moberg discloses wherein a rate of exchanging data between the transceiver and the at least one remote device is dynamically changed depending on a power mode of at least one of the transceiver and the at least one remote device (para [0143]) It would have been obvious to one of ordinary skill in the art to combine the transceiver disclosed by Brister with the dynamic data rate disclosed by Moberg to conserve battery.

9. **Claim 6 is rejected under 35 U.S.C. 103(a) as being unpatentable over Brister in view of Steil and further in view of US 2005/0043594 to Dinsmoor et al. (hereinafter "Dinsmoor").**

As to claim 6, Brister as modified by Steil discloses wake signal from an external device with an RF signal (see para [0326]), but does not disclose an ultrasonic sensor for receiving an ultrasonic signal from the at least one remote device when the at least one remote device

transmits the ultrasonic signal to the transceiver to wake up the transceiver. Dinsmoor teaches that an RF sensor and signal can be substituted for an ultrasonic sensor for receiving an ultrasonic signal from the at least one remote device when the at least one remote device transmits the ultrasonic signal to the transceiver to wake up the transceiver (see para [0008]). Thus, it would have been obvious to one of ordinary skill in the art to provide the ultrasound sensor and ultrasound signal disclosed by Dinsmoor, since doing so would have been no more than a simple substitution of known elements to achieve predictable results.

Response to Arguments

10. Applicant's arguments filed October 12, 2011 have been fully considered but they are not persuasive.

Applicant argues that the cited portion of Brister fail to contemplate or suggest using the adhesive of the sensor system 10 to support the receiver in a fixed position. Examiner respectfully disagrees. Brister teaches that the sensor system is attached to the skin and that the sensor system and receiver may comprise a wired connection. Thus, the wired connection, along with the adhesive attaching the sensor to the skin, support the transceiver and keep it attached to the body at a fixed position. Examiner notes that the term "fixed position" has been interpreted broadly to mean that the position of the receiver is limited, i.e., it is fixed to some space.

Applicant further argues that it would be incongruous to support the Brister receiver 158 in a fixed position because it could impair view the display screen and manipulation of the user interface described in paragraphs [0504] and [0505]. Examiner again respectfully disagrees. At paragraph [0503], Brister teaches that the sensor and receiver each may be selectively worn and/or removed at the host's convenience. This teaching shows that Brister expressly

contemplates supporting the transceiver to the body via a wired connection to the sensor, which is attached to the body with adhesive tape.

Conclusion

Applicant's amendment necessitated the new ground(s) of rejection presented in this Office action. Accordingly, **THIS ACTION IS MADE FINAL**. See MPEP § 706.07(a). Applicant is reminded of the extension of time policy as set forth in 37 CFR 1.136(a).

A shortened statutory period for reply to this final action is set to expire THREE MONTHS from the mailing date of this action. In the event a first reply is filed within TWO MONTHS of the mailing date of this final action and the advisory action is not mailed until after the end of the THREE-MONTH shortened statutory period, then the shortened statutory period will expire on the date the advisory action is mailed, and any extension fee pursuant to 37 CFR 1.136(a) will be calculated from the mailing date of the advisory action. In no event, however, will the statutory period for reply expire later than SIX MONTHS from the date of this final action.

Any inquiry concerning this communication or earlier communications from the examiner should be directed to ERIC MESSERSMITH whose telephone number is (571)270-7081. The examiner can normally be reached on Mon-Fri 8:30 a.m. - 5:00 p.m.

If attempts to reach the examiner by telephone are unsuccessful, the examiner's supervisor, MIRANDA LE can be reached on (571) 272-4112. The fax phone number for the organization where this application or proceeding is assigned is 571-273-8300.

Information regarding the status of an application may be obtained from the Patent Application Information Retrieval (PAIR) system. Status information for published applications may be obtained from either Private PAIR or Public PAIR. Status information for unpublished applications is available through Private PAIR only. For more information about the PAIR system, see http://pair-direct.uspto.gov. Should you have questions on access to the Private PAIR system, contact the Electronic Business Center (EBC) at 866-217-9197 (toll-free). If you would like assistance from a USPTO Customer Service Representative or access to the automated information system, call 800-786-9199 (IN USA OR CANADA) or 571-272-1000.

/ERIC MESSERSMITH/
Examiner, Art Unit 3735
12/12/2011

/Miranda Le/
Supervisory Patent Examiner, Art Unit 3735

PTO/SB/08a (01-10)
Approved for use through 07/31/2012. OMB 0651-0031
U.S. Patent and Trademark Office; U.S. DEPARTMENT OF COMMERCE

Under the Paperwork Reduction Act of 1995, no persons are required to respond to a collection of information unless it contains a valid OMB control number.

INFORMATION DISCLOSURE STATEMENT BY APPLICANT

(Not for submission under 37 CFR 1.99)

Application Number	12056651
Filing Date	2008-03-27
First Named Inventor	Himanshu Patel
Art Unit	3735
Examiner Name	NASSER, ROBERT L
Attorney Docket Number	P25732 US

U.S.PATENTS Remove

Examiner Initial*	Cite No	Patent Number	Kind Code[1]	Issue Date	Name of Patentee or Applicant of cited Document	Pages,Columns,Lines where Relevant Passages or Relevant Figures Appear
	1					

If you wish to add additional U.S. Patent citation information please click the Add button. Add

U.S.PATENT APPLICATION PUBLICATIONS Remove

Examiner Initial*	Cite No	Publication Number	Kind Code[1]	Publication Date	Name of Patentee or Applicant of cited Document	Pages,Columns,Lines where Relevant Passages or Relevant Figures Appear
	1	20020158775	A1	2002-10-31	Wallace	
	2	20030208110	A1	2003-11-06	Mault et al.	
	3	20030208113	A1	2003-11-06	Mault et al.	
	4	20050102167	A1	2005-05-12	Kapoor	

If you wish to add additional U.S. Published Application citation information please click the Add button. Add

FOREIGN PATENT DOCUMENTS Remove

Examiner Initial*	Cite No	Foreign Document Number[3]	Country Code[2] ¡	Kind Code[4]	Publication Date	Name of Patentee or Applicant of cited Document	Pages,Columns,Lines where Relevant Passages or Relevant Figures Appear	T[5]

ALL REFERENCES CONSIDERED EXCEPT WHERE LINED THROUGH. /E.M./

INFORMATION DISCLOSURE STATEMENT BY APPLICANT (Not for submission under 37 CFR 1.99)		
	Application Number	12056651
	Filing Date	2008-03-27
	First Named Inventor	Himanshu Patel
	Art Unit	3735
	Examiner Name	NASSER, ROBERT L
	Attorney Docket Number	P25732 US

	1	03103301	WO	A2	2003-12-11			☐
	2	03103301	WO	A3	2003-12-11			☐

If you wish to add additional Foreign Patent Document citation information please click the Add button Add

NON-PATENT LITERATURE DOCUMENTS Remove

Examiner Initials*	Cite No	Include name of the author (in CAPITAL LETTERS), title of the article (when appropriate), title of the item (book, magazine, journal, serial, symposium, catalog, etc), date, pages(s), volume-issue number(s), publisher, city and/or country where published.	T[5]
	1	PCT Search Report and Written Opinion for PCT/US2008/078504	☐

If you wish to add additional non-patent literature document citation information please click the Add button Add

EXAMINER SIGNATURE

Examiner Signature	/Eric Messersmith/	Date Considered	06/20/2011

*EXAMINER: Initial if reference considered, whether or not citation is in conformance with MPEP 609. Draw line through a citation if not in conformance and not considered. Include copy of this form with next communication to applicant.

[1] See Kind Codes of USPTO Patent Documents at www.USPTO.GOV or MPEP 901.04. [2] Enter office that issued the document, by the two-letter code (WIPO Standard ST.3). [3] For Japanese patent documents, the indication of the year of the reign of the Emperor must precede the serial number of the patent document. [4] Kind of document by the appropriate symbols as indicated on the document under WIPO Standard ST.16 if possible. [5] Applicant is to place a check mark here if English language translation is attached.

ALL REFERENCES CONSIDERED EXCEPT WHERE LINED THROUGH. /E.M./

Index of Claims	Application/Control No.	Applicant(s)/Patent Under Reexamination
	12056651	PATEL ET AL.
	Examiner	**Art Unit**
	ERIC MESSERSMITH	3735

✓	Rejected	-	Cancelled	N	Non-Elected	A	Appeal
=	Allowed	÷	Restricted	I	Interference	O	Objected

☐ Claims renumbered in the same order as presented by applicant ☐ CPA ☐ T.D. ☐ R.1.47

CLAIM		DATE								
Final	Original	06/20/2011	12/14/2011							
	1	✓	✓							
	2	✓	✓							
	3	✓	✓							
	4	✓	✓							
	5	✓	✓							
	6	✓	✓							
	7	✓	✓							
	8	✓	✓							
	9	✓	✓							
	10	✓	✓							
	11	✓	✓							
	12	✓	✓							
	13	✓	✓							
	14	✓	✓							
	15	✓	✓							
	16	✓	✓							
	17	✓	✓							
	18	✓	✓							
	19	✓	✓							
	20	✓	✓							
	21	✓	✓							
	22	✓	✓							
	23	✓	✓							
	24	✓	✓							
	25	✓	✓							
	26	✓	✓							
	27	✓	✓							
	28	✓	✓							
	29	✓	✓							

Search Notes	Application/Control No.	Applicant(s)/Patent Under Reexamination
	12056651	PATEL ET AL.
	Examiner	**Art Unit**
	ERIC MESSERSMITH	3735

SEARCHED

Class	Subclass	Date	Examiner
600	300, 365		

SEARCH NOTES

Search Notes	Date	Examiner
Inventor search (see EAST search history)	06/20/2011	EJM
EAST Search (see attached)	06/20/2011	EJM
STIC PLUS Search	12/12/2011	EJM
Updated Keyword Search in EAST	12/12/2011	EJM

INTERFERENCE SEARCH

Class	Subclass	Date	Examiner

EAST Search History

EAST Search History (Prior Art)

Ref #	Hits	Search Query	DBs	Default Operator	Plurals	Time Stamp
L1	2273	600/300,365.ccls. and (adhes$6 adher$6 stick$4 tape)	US-PGPUB; USPAT; EPO; JPO; DERWENT	OR	ON	2011/12/14 17:02
L2	106	600/300,365.ccls. and (adhes$6 adher$6 stick$4 tape) with receiver	US-PGPUB; USPAT; EPO; JPO; DERWENT	OR	ON	2011/12/14 17:03
L3	68	600/300,365.ccls. and (adhes$6 adher$6 stick$4 tape) with receiver and glucose near2 sens$5	US-PGPUB; USPAT; EPO; JPO; DERWENT	OR	ON	2011/12/14 17:03
S1	6139	600/300,365.ccls.	US-PGPUB; USPAT; EPO; JPO; DERWENT	OR	ON	2011/06/17 09:58
S2	90	((HIMANSHU) near2 (PATEL)).INV.	US-PGPUB; USPAT	OR	ON	2011/06/17 10:04
S3	91	((WAYNE) near2 (MORGAN)).INV.	US-PGPUB; USPAT	OR	ON	2011/06/17 10:04
S4	23	((EDWARD) near2 (CHERNOFF)).INV.	US-PGPUB; USPAT	OR	ON	2011/06/17 10:04
S5	109	((JOHN) near2 (MASTROTOTARO)).INV.	US-PGPUB; USPAT	OR	ON	2011/06/17 10:04
S6	195	S2 or S3 or S4	US-PGPUB; USPAT; EPO; JPO; DERWENT	OR	ON	2011/06/17 10:04
S7	199	("20080060955" "7278983" "7722536" "7901394" "20040167464" "20060173260" "20070060869" "20070060870" "20070093786" "20070293843" "20090048501" "20090069744" "20090085768" "20090227855" "20100099972" "20100099973" "20100235439" "20110022025" "4545382" "6063637" "5212988" "5593852" "5667983" "5837199" "5965380" "6042751" "6083710" "6121009" "6150128" "6162611" "4445885" "4758323" "4788150" "4795707" "5551422" "5665215" "5670057" "5693577" "5695623" "5951521" "6027479" "6037178" "6061128" "6071739" "6077660" "6107083" "6221238" "6221238" "6287765" "6350431" "6462007" "6641533" "7677409"	US-PGPUB; USPAT; EPO; JPO; DERWENT	OR	ON	2011/06/17 10:04

		"20020002326" "20020049480" "20020058906" "20040073095" "20060253085" "20060258761" "20070156033" "20070244379" "20080021666" "20080039770" "20080076997" "20080083773" "20080094804" "20090033333" "20090061076" "20090177068" "20090178923" "20090267774" "20090267775" "20090270705" "20090287073" "20100053556" "20100063371" "20100147870" "20100331644" "5686888" "4268756" "4360729" "4517566" "4588978" "4604740" "5008678" "5197668" "5203497" "5245396" "5272476" "5313944" "5321273" "5483767" "5499292" "5504325" "5506410" "5511335" "5546695" "5589940" "5664035" "5666159").pn.				
S12	199	("20080060955" "7278983" "7722536" "7901394" "20040167464" "20060173260" "20070060869" "20070060870" "20070093786" "20070293843" "20090048501" "20090069744" "20090085768" "20090227855" "20100099972" "20100099973" "20100235439" "20110022025" "4545382" "6063637" "5212988" "5593852" "5667983" "5837199" "5965380" "6042751" "6083710" "6121009" "6150128" "6162611" "4445885" "4758323" "4788150" "4795707" "5551422" "5665215" "5670057" "5693577" "5695623" "5951521" "6027479" "6037178" "6061128" "6071739" "6077660" "6107083" "6221238" "6221238" "6287765" "6350431" "6462007" "6641533" "7677409" "20020002326" "20020049480" "20020058906" "20040073095" "20060253085" "20060258761" "20070156033" "20070244379" "20080021666" "20080039770" "20080076997" "20080083773" "20080094804" "20090033333" "20090061076" "20090177068" "20090178923" "20090267774" "20090267775" "20090270705" "20090287073" "20100053556" "20100063371" "20100147870" "20100331644" "5686888" "4268756" "4360729" "4517566" "4588978" "4604740" "5008678" "5197668" "5203497" "5245396"	US-PGPUB; USPAT; EPO; JPO; DERWENT	OR	ON	2011/06/17 13:00

		"5272476" "5313944" "5321273" "5483767" "5499292" "5504325" "5506410" "5511335" "5546695" "5589940" "5664035" "5666159").pn.				
S13	8	S12 and dexcom	US-PGPUB; USPAT; EPO; JPO; DERWENT	OR	ON	2011/06/17 13:00
S14	823	brauker.in. or brister.in.	US-PGPUB; USPAT; EPO; JPO; DERWENT	OR	ON	2011/06/17 13:17
S15	573	S14 and glucose	US-PGPUB; USPAT; EPO; JPO; DERWENT	OR	ON	2011/06/17 13:17
S16	4430	lord.in.	US-PGPUB; USPAT; EPO; JPO; DERWENT	OR	ON	2011/06/17 13:17
S17	178	S16 and glucose	US-PGPUB; USPAT; EPO; JPO; DERWENT	OR	ON	2011/06/17 13:17
S18	751	S17 or S15	US-PGPUB; USPAT; EPO; JPO; DERWENT	OR	ON	2011/06/17 13:18
S19	112	S18 and housing with (attach$6 detach$6 mate$2 mating$4 $2coupl$4)	US-PGPUB; USPAT; EPO; JPO; DERWENT	OR	ON	2011/06/17 13:19
S20	54	S19 and housing with (transmit$6 transceiv$4 wireless communicat $4)	US-PGPUB; USPAT; EPO; JPO; DERWENT	OR	ON	2011/06/17 13:20
S21	1815	600/365,347.ccls.	US-PGPUB; USPAT; EPO; JPO; DERWENT	OR	ON	2011/06/17 13:21
S22	20	S21 and (tranceiv$4 transmit$4 communicat$4 wireless$4 telemeter$4 telemetr$4) with wake	US-PGPUB; USPAT; EPO; JPO; DERWENT	OR	ON	2011/06/17 13:22
S23	3	S20 and wake	US-PGPUB; USPAT; EPO; JPO; DERWENT	OR	ON	2011/06/17 13:24
S24	565	S21 and (tranceiv$4 transmit$4 communicat$4 wireless$4 telemeter$4 telemetr$4) with (activat$4 power$4)	US-PGPUB; USPAT; EPO; JPO; DERWENT	OR	ON	2011/06/17 13:51
S25	9	S21 and (tranceiv$4 transmit$4 communicat$4 wireless$4 telemeter$4 telemetr$4) with (activat$4 power$4) with (two-way or two adj way or bi $4direction$4)	US-PGPUB; USPAT; EPO; JPO; DERWENT	OR	ON	2011/06/17 13:52

S26	7	S21 and (tranceiv$4 transmit$4 communicat$4 wireless$4 telemeter$4 telemetr$4) with (activat$4 power$4) with (two-way or two adj way or bi $4direction$4) and processor with (tranceiv$4 transmit$4 communicat$4 wireless$4 telemeter$4 telemetr$4)	US-PGPUB; USPAT; EPO; JPO; DERWENT	OR	ON	2011/06/17 13:53
S27	16	S18 and housing with (attach$6 detach$6 mate$2 mating$4 $2coupl$4) with ($5process$3)	US-PGPUB; USPAT; EPO; JPO; DERWENT	OR	ON	2011/06/17 13:55
S28	199	("20080060955" "7278983" "7722536" "7901394" "20040167464" "20060173260" "20070060869" "20070060870" "20070093786" "20070293843" "20090048501" "20090069744" "20090085768" "20090227855" "20100099972" "20100099973" "20100235439" "20110022025" "4545382" "6063637" "5212988" "5593852" "5667983" "5837199" "5965380" "6042751" "6083710" "6121009" "6150128" "6162611" "4445885" "4758323" "4788150" "4795707" "5551422" "5665215" "5670057" "5693577" "5695623" "5951521" "6027479" "6037178" "6061128" "6071739" "6077660" "6107083" "6221238" "6221238" "6287765" "6350431" "6462007" "6641533" "7677409" "20020002326" "20020049480" "20020058906" "20040073095" "20060253085" "20060258761" "20070156033" "20070244379" "20080021666" "20080039770" "20080076997" "20080083773" "20080094804" "20090033333" "20090061076" "20090177068" "20090178923" "20090267774" "20090267775" "20090270705" "20090287073" "20100053556" "20100063371" "20100147870" "20100331644" "5686888" "4268756" "4360729" "4517566" "4588978" "4604740" "5008678" "5197668" "5203497" "5245396" "5272476" "5313944" "5321273" "5483767" "5499292" "5504325" "5506410" "5511335" "5546695" "5589940" "5664035" "5666159").pn.	US-PGPUB; USPAT; EPO; JPO; DERWENT	OR	ON	2011/06/17 16:16

S29	28	S28 and $synchron$5	US-PGPUB; USPAT; EPO; JPO; DERWENT	OR	ON	2011/06/17 16:16
S30	823	brauker.in. or brister.in.	US-PGPUB; USPAT; EPO; JPO; DERWENT	OR	ON	2011/06/17 16:16
S31	823	S30	US-PGPUB; USPAT; EPO; JPO; DERWENT	OR	ON	2011/06/17 16:16
S32	3	S28 and wake with sleep adj mode	US-PGPUB; USPAT; EPO; JPO; DERWENT	OR	ON	2011/06/17 16:18
S33	0	S30 and wake with sleep adj mode	US-PGPUB; USPAT; EPO; JPO; DERWENT	OR	ON	2011/06/17 16:19
S34	6139	600/300,365.ccls.	US-PGPUB; USPAT; EPO; JPO; DERWENT	OR	ON	2011/06/17 16:19
S35	21	S34 and wake with sleep adj mode	US-PGPUB; USPAT; EPO; JPO; DERWENT	OR	ON	2011/06/17 16:19
S36	3	S34 and wake with ultraso$6	US-PGPUB; USPAT; EPO; JPO; DERWENT	OR	ON	2011/06/17 16:19
S37	1783	A61b005/145.ipc.	US-PGPUB; USPAT; EPO; JPO; DERWENT	OR	ON	2011/06/17 16:20
S38	3	S36 and wake with ultraso$6	US-PGPUB; USPAT; EPO; JPO; DERWENT	OR	ON	2011/06/17 16:20
S39	3	S36 and (sleep activat$4) with ultraso$6	US-PGPUB; USPAT; EPO; JPO; DERWENT	OR	ON	2011/06/17 16:21
S40	312	(sleep activat$4) with mode with ultraso$6	US-PGPUB; USPAT; EPO; JPO; DERWENT	OR	ON	2011/06/17 16:21
S41	465	S31 and implant$4	US-PGPUB; USPAT; EPO; JPO; DERWENT	OR	ON	2011/06/17 16:21
S42	6	(sleep activat$4) with mode with ultraso$6 with wak$4	US-PGPUB; USPAT; EPO; JPO; DERWENT	OR	ON	2011/06/17 16:22
S43	0	S34 with power$4 with ultraso$6 with (battery or conserv$4)	US-PGPUB; USPAT; EPO; JPO; DERWENT	OR	ON	2011/06/17 16:23
S44	0	S34 with mode with ultraso$6	US-PGPUB; USPAT; EPO; JPO; DERWENT	OR	ON	2011/06/17 16:23

S45	15	S34 and power$4 with ultraso$6 with (battery or conserv$4)	US-PGPUB; USPAT; EPO; JPO; DERWENT	OR	ON	2011/06/17 16:23
S46	5	S34 and periodic$4 with (conserv $4 save saving extend$4 length$4) with battery	US-PGPUB; USPAT; EPO; JPO; DERWENT	OR	ON	2011/06/17 16:32
S47	58	S34 and periodic$4 near7 battery	US-PGPUB; USPAT; EPO; JPO; DERWENT	OR	ON	2011/06/17 16:37
S48	265	S34 and periodic$4 near5 transmit $4	US-PGPUB; USPAT; EPO; JPO; DERWENT	OR	ON	2011/06/17 16:39
S49	31	S48 and asynchronous$4	US-PGPUB; USPAT; EPO; JPO; DERWENT	OR	ON	2011/06/17 16:43
S50	0	2006/0183985.pn.	US-PGPUB; USPAT; EPO; JPO; DERWENT	OR	ON	2011/06/17 17:08
S51	2	"20060183985".pn.	US-PGPUB; USPAT; EPO; JPO; DERWENT	OR	ON	2011/06/17 17:09
S52	1	S51 and transmit$4	US-PGPUB; USPAT; EPO; JPO; DERWENT	OR	ON	2011/06/17 17:09
S53	1	S51 and transmit$4 same request	US-PGPUB; USPAT; EPO; JPO; DERWENT	OR	ON	2011/06/17 17:12
S54	2	"20050043594".pn.	US-PGPUB; USPAT; EPO; JPO; DERWENT	OR	ON	2011/06/17 17:17
S55	0	S34 and asynchronous$ with expens$4	US-PGPUB; USPAT; EPO; JPO; DERWENT	OR	ON	2011/06/17 17:42
S56	281	S34 and asynchronous$	US-PGPUB; USPAT; EPO; JPO; DERWENT	OR	ON	2011/06/17 17:42
S57	0	S34 and asynchronous$ with cheap$4	US-PGPUB; USPAT; EPO; JPO; DERWENT	OR	ON	2011/06/17 17:42
S58	61	S34 and asynchronous$ with data and glucose	US-PGPUB; USPAT; EPO; JPO; DERWENT	OR	ON	2011/06/17 17:42
S59	9	S34 and asynchronous$ with data and glucose and hopping	US-PGPUB; USPAT; EPO; JPO; DERWENT	OR	ON	2011/06/17 17:43
S60	8	S34 and asynchronous$ with data and glucose and scanning	US-PGPUB; USPAT; EPO; JPO; DERWENT	OR	ON	2011/06/17 17:43

S61	826	brauker.in. or brister.in.	US-PGPUB; USPAT; EPO; JPO; DERWENT	OR	ON	2011/06/20 11:37
S62	826	S61	US-PGPUB; USPAT; EPO; JPO; DERWENT	OR	ON	2011/06/20 11:37
S63	0	S62 and encrypt$4 near5 external	US-PGPUB; USPAT; EPO; JPO; DERWENT	OR	ON	2011/06/20 11:38
S64	0	S62 and encrypt$4 with external	US-PGPUB; USPAT; EPO; JPO; DERWENT	OR	ON	2011/06/20 11:38
S65	0	S62 and encrypt$4	US-PGPUB; USPAT; EPO; JPO; DERWENT	OR	ON	2011/06/20 11:38
S66	6139	600/300,365.ccls.	US-PGPUB; USPAT; EPO; JPO; DERWENT	OR	ON	2011/06/20 11:40
S67	6139	S66	US-PGPUB; USPAT; EPO; JPO; DERWENT	OR	ON	2011/06/20 11:40
S68	595	S67 and encrypt$4	US-PGPUB; USPAT; EPO; JPO; DERWENT	OR	ON	2011/06/20 11:40
S69	30	S67 and encrypt$4 with external $4	US-PGPUB; USPAT; EPO; JPO; DERWENT	OR	ON	2011/06/20 11:40
S70	583	encrypt$4 with device and glucose	US-PGPUB; USPAT; EPO; JPO; DERWENT	OR	ON	2011/06/20 11:42
S71	182	S67 and encrypt$4 with device	US-PGPUB; USPAT; EPO; JPO; DERWENT	OR	ON	2011/06/20 11:42
S72	7	S67 and encrypt$4 with device same glucose	US-PGPUB; USPAT; EPO; JPO; DERWENT	OR	ON	2011/06/20 11:42
S73	53	S67 and encrypt$4 with device and glucose with data	US-PGPUB; USPAT; EPO; JPO; DERWENT	OR	ON	2011/06/20 11:46
S74	1815	600/365,347.ccls.	US-PGPUB; USPAT; EPO; JPO; DERWENT	OR	ON	2011/06/20 13:31
S75	542	S74 and proximity	US-PGPUB; USPAT; EPO; JPO; DERWENT	OR	ON	2011/06/20 13:31
S76	8	S74 and proximity with (alert$4 alarm$4 audibl$4 aud$4)	US-PGPUB; USPAT; EPO; JPO; DERWENT	OR	ON	2011/06/20 13:32

S77	37	S74 and bluetooth near5 range	US-PGPUB; USPAT; EPO; JPO; DERWENT	OR	ON	2011/06/20 13:34
S78	48	S74 and display$4 near5 connection	US-PGPUB; USPAT; EPO; JPO; DERWENT	OR	ON	2011/06/20 13:35
S79	90	S61 and out near2 range	US-PGPUB; USPAT; EPO; JPO; DERWENT	OR	ON	2011/06/20 13:37
S80	4	alarm with range with connection with bluetooth	US-PGPUB; USPAT; EPO; JPO; DERWENT	OR	ON	2011/06/20 13:38
S81	44	alarm with range with bluetooth	US-PGPUB; USPAT; EPO; JPO; DERWENT	OR	ON	2011/06/20 13:38
S82	77	indicator near bluetooth	US-PGPUB; USPAT; EPO; JPO; DERWENT	OR	ON	2011/06/20 13:38
S83	2	S66 and signal near2 range near2 (display screen indicator)	US-PGPUB; USPAT; EPO; JPO; DERWENT	OR	ON	2011/06/20 13:40
S84	841	signal near2 range near2 (display screen indicator)	US-PGPUB; USPAT; EPO; JPO; DERWENT	OR	ON	2011/06/20 13:41
S85	85	S84 and "600"/$.ccls.	US-PGPUB; USPAT; EPO; JPO; DERWENT	OR	ON	2011/06/20 13:41
S86	30	signal near2 range near2 (display screen indicator) with (wireless connection)	US-PGPUB; USPAT; EPO; JPO; DERWENT	OR	ON	2011/06/20 13:42
S87	14624	signal near2 strength with (display screen indicator)	US-PGPUB; USPAT; EPO; JPO; DERWENT	OR	ON	2011/06/20 13:42
S88	316	S87 and "600"/$.ccls.	US-PGPUB; USPAT; EPO; JPO; DERWENT	OR	ON	2011/06/20 13:42
S89	6	S87 and 600/365.ccls.	US-PGPUB; USPAT; EPO; JPO; DERWENT	OR	ON	2011/06/20 13:43
S90	327	alert near5 signal near5 (weak or loss or lost)	US-PGPUB; USPAT; EPO; JPO; DERWENT	OR	ON	2011/06/20 13:44
S91	380	alert$ near5 signal near5 (weak or loss or lost)	US-PGPUB; USPAT; EPO; JPO; DERWENT	OR	ON	2011/06/20 13:44
S92	0	S91 and 600/365.ccls.	US-PGPUB; USPAT; EPO; JPO; DERWENT	OR	ON	2011/06/20 13:45

S93	294	S66 and (alert$4 alarm$4 indicat$ beep$4) with outside with range	US-PGPUB; USPAT; EPO; JPO; DERWENT	OR	ON	2011/06/20 13:45
S94	24	S66 and (alert$4 alarm$4 indicat$ beep$4) with outside with range same wireless	US-PGPUB; USPAT; EPO; JPO; DERWENT	OR	ON	2011/06/20 13:45
S95	5	S66 and (dynamic$4 chang$4) with power$4 with (increas$ rais $4 greater) with signal	US-PGPUB; USPAT; EPO; JPO; DERWENT	OR	ON	2011/06/20 13:53
S96	12	S66 and (dynamic$4 chang$4) with power$4 with wireless	US-PGPUB; USPAT; EPO; JPO; DERWENT	OR	ON	2011/06/20 13:54
S97	2	"20060183985".pn.	US-PGPUB; USPAT; EPO; JPO; DERWENT	OR	ON	2011/12/14 13:39
S98	1	S97 and (adhes$6 adher$6 stick$4 tape)	US-PGPUB; USPAT; EPO; JPO; DERWENT	OR	ON	2011/12/14 13:39

EAST Search History (Interference)

<This search history is empty>

12/ 14/ 2011 5:08:45 PM
C:\Documents and Settings\emessersmith\My Documents\EAST\Workspaces\12056651\12056651.wsp

PLUS Search Results for S/N 12056651, Searched Thu Dec 15 09:26:40 EST 2011

The Patent Linguistics Utility System (PLUS) is a USPTO automated search system for U.S. Patents from 1971 to the present PLUS is a query-by-example search system which produces a list of patents that are most closely related linguistically to the application searched. This search was prepared by the staff of the Scientific and Technical Information Center, SIRA.

20080060955 99
6221238 74
7278983 74
7722536 74
7901394 74
8029443 74
20040167464 74
20060173260 74
20070060869 74
20070060870 74
20070093786 74
20070293843 74
20090048501 74
20090069744 74
20090085768 74
20090227855 74
20100099972 74
20100099973 74
20100235439 74
20110022025 74
20110184265 74
4545382 74
6063637 74
5212988 74
5593852 74
5667983 74
5837199 74
5965380 74
6042751 74
6083710 74
6121009 74
6150128 74
6162611 74
4445885 74
4758323 74
4788150 74
4795707 74
5551422 74
5665215 74
5670057 74
5693577 74
5695623 74
5951521 74
6027479 74
6037178 74
6061128 74
6071739 74
6077660 74
6107083 74
6221238 74

IN THE UNITED STATES PATENT AND TRADEMARK OFFICE

In re Utility Application of: Himanshu Patel	)	Group Art Unit: 3735
Serial No.: 12/056,651	)	Examiner: MESSERSMITH, ERIC
Filed: March 27, 2008	)	Confirmation No.: 9941
For: GLUCOSE SENSOR TRANSCEIVER	)	Attorney Docket No.: P25732 US
	)	Date: October 12, 2011

AMENDMENT

Commissioner for Patents
P.O. Box 1450
Alexandria, VA 22313-1450

Sir:

The present Amendment is filed on October 12, 2011 in response to the Office Action mailed on July 13, 2011 for the above-identified application. Please enter and consider the following amendment and remarks.

Amendments to the Claims are reflected in the listing of claims which begins on page 2 of this paper. This listing of claims will replace all prior versions.

Remarks begin on page 8 of this paper.

AMENDMENTS TO THE CLAIMS:

The following is a complete listing of the claims.

1. (Currently amended) A telemetered characteristic sensor transceiver for exchanging data with at least one remote device, the transceiver comprising:

a transceiver housing detachably coupled to a sensor located on a body of a user, the sensor producing a signal indicative of a user characteristic, the sensor being affixed to the user with a single adhesive tape;

a processor formed within the transceiver housing and in communication with the sensor for processing the signal produced by the sensor;

a transmitter coupled to the processor for transmitting data to at least one remote device;

a receiver coupled to the processor for receiving data from the at least one remote device; and

a memory coupled to the processor for storing data,

wherein a transceiver housing coupled to a sensor affixed to the user remains in a fixed position supported by the single adhesive tape, the processor performs calculations using at least one of the signal produced by the sensor, the data received from the at least one remote device and the data stored in the memory, [[and]] the processor further performs at least one of storing the calculations in the memory and transmitting the calculations to the at least one remote device through the transmitter.

2. (Original) The transceiver of claim 1, wherein the transceiver exchanges data with a plurality of remote devices in a network structure.

3. (Original) The transceiver of claim 1, wherein the transceiver exchanges data with the at least one remote device in a synchronous manner.

4. (Original) The transceiver of claim 1, wherein the transceiver wakes up from a sleep mode prior to exchanging data with the at least one remote device.

5. (Original) The transceiver of claim 4, wherein the at least one remote device wakes up the transceiver.

6. (Original) The transceiver of claim 5, further comprising an ultrasonic sensor for receiving an ultrasonic signal from the at least one remote device when the at least one remote device transmits the ultrasonic signal to the transceiver to wake up the transceiver.

7. (Original) The transceiver of claim 4, wherein the transceiver periodically wakes up independent of the at least one remote device.

8. (Original) The transceiver of claim 1, wherein the transceiver exchanges data with the at least one remote device in an asynchronous manner.

9. (Original) The transceiver of claim 8, wherein the data exchanged in the asynchronous manner comprises at least one of: a blood glucose value; and a request for glucose history data.

10. (Original) The transceiver of claim 1, wherein the data exchanged between the transceiver and the at least one remote device comprises at least one of: device configuration data; communication link configuration data; adaptive communication configuration data; glucose history data; and calibration data.

11. (Original) The transceiver of claim 10, wherein the device configuration data comprises at least one of: a device identification; user information; and time information.

12. (Original) The transceiver of claim 10, wherein the communication link configuration data comprises at least one of: a communication rate; frequency information; and frequency hopping configuration information.

13. (Original) The transceiver of claim 10, wherein the glucose history data is exchanged according to a time interval.

14. (Original) The transceiver of claim 10, wherein the calibration data comprises at least one of: sensor initialization sequence and configuration information; and dynamic sensor initialization parameters.

15. (Original) The transceiver of claim 1, wherein the processor calculates sensor glucose values using at least one of the signal received from the sensor, the data received from the at least one remote device and the data stored in the memory.

16. (Original) The transceiver of claim 15, wherein a rate of exchanging data between the transceiver and the at least one remote device is dynamically changed depending on a characteristic of the calculated sensor glucose values.

17. (Original) The transceiver of claim 15, wherein a glucose calculation algorithm for calculating the sensor glucose values is stored in the memory.

18. (Original) The transceiver of claim 15, wherein the processor stores the calculated sensor glucose values in the memory or transmits the calculated sensor glucose values to the at least one remote device through the transmitter.

19. (Original) The transceiver of claim 18, wherein the calculated sensor glucose values are secured via an encryption scheme before transmission to the at least one remote device.

20. (Original) The transceiver of claim 15, wherein the receiver receives calibration data from the at least one remote device and the processor stores the received calibration data in the memory.

21. (Original) The transceiver of claim 20, wherein the processor performs a calibration using at least one of the calibration data stored in the memory, the signal received from the sensor and the calculated glucose sensor values.

22. (Original) The transceiver of claim 21, wherein a calibration algorithm for

performing the calibration is stored in the memory.

23. (Original) The transceiver of claim 1, further comprising a display for displaying information processed by the processor.

24. (Original) The transceiver of claim 1, further comprising means for notifying the user that the at least one remote device is beyond a certain distance from the transceiver.

25. (Original) The transceiver of claim 1, wherein a power for exchanging data between the transceiver and the at least one remote device is dynamically changed depending on a strength of a detected signal between the transceiver and the at least one remote device.

26. (Original) The transceiver of claim 1, wherein a rate of exchanging data between the transceiver and the at least one remote device is dynamically changed depending on a power mode of at least one of the transceiver and the at least one remote device.

27. (Original) The transceiver of claim 1, wherein the housing is capable of detaching from the sensor and attaching to the at least one remote device.

28. (Original) The transceiver of claim 1, wherein the processor communicates with the sensor via wireless means.

29. (Original) The transceiver of claim 1, wherein the housing comprises a single

communication port for facilitating at least two of: communication between the transceiver and the sensor; communication between the transceiver and the at least one remote device; and an electrical connection between the transceiver and a battery charger.

REMARKS

Applicants thank the Examiner for the careful review of the as-filed application and Office Action mailed on July 13, 2011. It is submitted that after entry of the present amendments, the application is in condition for allowance over the references cited in the Office Action. The amendments to the claim do not introduce new subject matter because support for the amendments is found in the as-filed application. Reconsideration of all of the pending claims in view of the amendment and remarks is respectfully requested.

Rejections based on 35 U.S.C. § 102

Claims 1-3, 10-12, 14-18, 20-23, and 27-29 were rejected under 35 U.S.C. § 102(b) as being anticipated by U.S. Patent Application Publication No. 2006/083,985 by Brister et al. (hereinafter "Brister"). Applicants respectfully traverse this rejection.

Applicants have amended independent claims 1 to further define the claimed subject matter. As amended, the sensor of claim 1 is affixed to the user via a single adhesive tape. Additionally, when the transceiver housing is coupled to a sensor affixed to the user the transceiver remains in a fixed position supported by the single adhesive layer between the sensor and the user. Support for the amendments is found at least in paragraph [0059] and throughout the as-filed specification.

After entry of the present amendment, Applicants submit that Brister fails to teach or suggest all of the amended claim features. Specifically, Applicants believe the cited portions of Brister are wholly inadequate in describing that the transceiver is held in a fixed position supported by a single adhesive tape that affixes the sensor to the patient. As cited by the Office the Brister receiver (element 158, Fig. 15) is coupled to the sensor system (element 10, Fig. 15)

via a cable. Applicants submit that the cited portions of Brister fail to contemplate or suggest using the adhesive of the sensor system 10 to support the receiver 158 in a fixed position. Furthermore, Applicants submit that it would be incongruous to support the Brister receiver 158 in a fixed position because it could impair viewing the display screen and manipulation of the user interface described in paragraphs [0504] and [0505] of Brister.

Accordingly, Applicants respectfully submit that amended independent claim 1 is in a condition of allowance and request withdrawal of the 35 U.S.C. § 102(b) rejection based on Brister. Similarly, Applicants submit that the remaining claims that depend directly or indirectly from claim 1 are similarly in a condition of allowance for at least the same reasons discussed above.

Rejections based on 35 U.S.C. § 103

Dependent claims 4-5 and 7 were rejected under 35 U.S.C. § 103(a) as being unpatentable over Brister in view of U.S. Patent Publication No. 2003/0130616 by Steil et al. (hereinafter "Steil").

Applicants submit that after entry of the present amendment dependent claims 4, 5 and 17are patentably distinguishable from the combination of Brister and Steil for at least the reasons discussed above regarding the 35 U.S.C. § 102 rejection of independent claim 1, from which claims 4, 5 and 17 depend.

Dependent claims 8 and 9 were rejected under 35 U.S.C. § 103(a) as being unpatentable over Brister in view of U.S. Patent Publication No. 2009/0076358 by Reggiardo et al. (hereinafter "Reggiardo").

Applicants submit that after entry of the present amendment dependent claims 8 and 9 are patentably distinguishable from the combination of Brister and Reggiardo for at least the reasons discussed above regarding the 35 U.S.C. § 102 rejection of independent claim 1, from which claims 8 and 9 depend.

Dependent claim 19 was rejected under 35 U.S.C. § 103(a) as being unpatentable over Brister in view of U.S. Patent Publication no. 2007/0197878 by Shklarski (hereinafter "Shklarksi").

Applicants submit that after entry of the present amendment dependent claim 19 is patentably distinguishable from the combination of Brister and Shklarski for at least the reasons discussed above regarding independent claim 1 from which claim 19 depends.

Dependent claim 24 was rejected under 35 U.S.C. § 103(a) as being unpatentable over Brister in view of U.S. Patent Publication no. 2004/0176667 by Mihai et al. (hereinafter "Mihai").

Applicants submit that after entry of the present amendment dependent claim 24 is patentably distinguishable from the combination of Brister and Mihai for at least the reasons discussed above regarding independent claim 1 from which claim 24 depends.

Dependent claims 25 and 26 were rejected under 35 U.S.C. § 103(a) as being unpatentable over Brister in view of U.S. Patent Publication no. 2007/0255126 by Moberg et al. (hereinafter "Moberg").

Applicants submit that after entry of the present amendment dependent claims 25 and 26

are patentably distinguishable from the combination of Brister and Moberg for at least the reasons discussed above regarding independent claim 1 from which claims 25 and 26 depend.

Dependent claim 6 was rejected under 35 U.S.C. § 103(a) as being unpatentable over Brister in view of Steil and further in view of U.S. Patent Publication no. 2005/0043594 by Dinsmoor et al. (hereinafter "Dinsmoor").

Applicants submit that after entry of the present amendment dependent claim 6 is patentably distinguishable from the combination of Brister, Steil, and Dinsmoor for at least the reasons discussed above regarding independent claim 1 from which claim 6 depends.

If for any reason the Examiner finds the application other than in condition for allowance, the Examiner is invited to call the undersigned attorney at (818) 576-4330 should the Examiner believe a telephone interview would advance the prosecution of the application.

The Commissioner is hereby authorized to charge any additional fees which may be required regarding this application under 37 C.F.R. §§ 1.16-1.17, or credit any overpayment, to Deposit Account No. 50-0621. Should no proper payment be enclosed herewith, as by a check or credit card payment form being in the wrong amount, unsigned, post-dated, otherwise improper or informal or even entirely missing, the Commissioner is authorized to charge the unpaid amount to Deposit Account No. 50-0621. If any extensions of time are needed for timely acceptance of papers submitted herewith, Applicant hereby petitions for such extensions under 37 C.F.R. § 1.136 and authorizes payment of any such extensions fees to Deposit Account No. 50-0621.

Respectfully submitted,

Dated: October 12, 2011

By: /Konrad Chan/

Konrad K. Chan
Reg. No. 57,857

Medtronic MiniMed, Inc.
18000 Devonshire Street
Northridge, CA 91325-1219
Telephone: (818) 576-4330
Facsimile: (818) 576-6202

Electronic Acknowledgement Receipt

EFS ID:	11175470
Application Number:	12056651
International Application Number:	
Confirmation Number:	9941
Title of Invention:	GLUCOSE SENSOR TRANSCEIVER
First Named Inventor/Applicant Name:	Himanshu Patel
Customer Number:	23608
Filer:	Konrad K. Chan
Filer Authorized By:	
Attorney Docket Number:	P25732 US
Receipt Date:	12-OCT-2011
Filing Date:	27-MAR-2008
Time Stamp:	19:24:28
Application Type:	Utility under 35 USC 111(a)

Payment information:

Submitted with Payment	no

File Listing:

Document Number	Document Description	File Name	File Size(Bytes)/ Message Digest	Multi Part /.zip	Pages (if appl.)
1		P25732_US_2011-10-13_Response_to_OA.pdf	47491 e07cb6f6bdaef5ea10c90e10c45ee80504f33eb8	yes	12

	Multipart Description/PDF files in .zip description		
	Document Description	**Start**	**End**
	Amendment/Req. Reconsideration-After Non-Final Reject	1	1
	Claims	2	7
	Applicant Arguments/Remarks Made in an Amendment	8	12

Warnings:	
Information:	
Total Files Size (in bytes):	47491

This Acknowledgement Receipt evidences receipt on the noted date by the USPTO of the indicated documents, characterized by the applicant, and including page counts, where applicable. It serves as evidence of receipt similar to a Post Card, as described in MPEP 503.

<u>New Applications Under 35 U.S.C. 111</u>
If a new application is being filed and the application includes the necessary components for a filing date (see 37 CFR 1.53(b)-(d) and MPEP 506), a Filing Receipt (37 CFR 1.54) will be issued in due course and the date shown on this Acknowledgement Receipt will establish the filing date of the application.

<u>National Stage of an International Application under 35 U.S.C. 371</u>
If a timely submission to enter the national stage of an international application is compliant with the conditions of 35 U.S.C. 371 and other applicable requirements a Form PCT/DO/EO/903 indicating acceptance of the application as a national stage submission under 35 U.S.C. 371 will be issued in addition to the Filing Receipt, in due course.

<u>New International Application Filed with the USPTO as a Receiving Office</u>
If a new international application is being filed and the international application includes the necessary components for an international filing date (see PCT Article 11 and MPEP 1810), a Notification of the International Application Number and of the International Filing Date (Form PCT/RO/105) will be issued in due course, subject to prescriptions concerning national security, and the date shown on this Acknowledgement Receipt will establish the international filing date of the application.

PTO/SB/06 (07-06)
Approved for use through 1/31/2007. OMB 0651-0032
U.S. Patent and Trademark Office; U.S. DEPARTMENT OF COMMERCE
Under the Paperwork Reduction Act of 1995, no persons are required to respond to a collection of information unless it displays a valid OMB control number.

PATENT APPLICATION FEE DETERMINATION RECORD

Substitute for Form PTO-875

Application or Docket Number	Filing Date	☐ To be Mailed
12/056,651	03/27/2008	

APPLICATION AS FILED – PART I

FOR	(Column 1) NUMBER FILED	(Column 2) NUMBER EXTRA	SMALL ENTITY ☐ RATE ($)	SMALL ENTITY FEE ($)	OR	OTHER THAN SMALL ENTITY RATE ($)	OTHER THAN SMALL ENTITY FEE ($)
☐ BASIC FEE (37 CFR 1.16(a), (b), or (c))	N/A	N/A	N/A			N/A	
☐ SEARCH FEE (37 CFR 1.16(k), (i), or (m))	N/A	N/A	N/A			N/A	
☐ EXAMINATION FEE (37 CFR 1.16(o), (p), or (q))	N/A	N/A	N/A			N/A	
TOTAL CLAIMS (37 CFR 1.16(i))	minus 20 =	*	X $ =		OR	X $ =	
INDEPENDENT CLAIMS (37 CFR 1.16(h))	minus 3 =	*	X $ =			X $ =	
☐ APPLICATION SIZE FEE (37 CFR 1.16(s))	If the specification and drawings exceed 100 sheets of paper, the application size fee due is $250 ($125 for small entity) for each additional 50 sheets or fraction thereof. See 35 U.S.C. 41(a)(1)(G) and 37 CFR 1.16(s).						
☐ MULTIPLE DEPENDENT CLAIM PRESENT (37 CFR 1.16(j))							
* If the difference in column 1 is less than zero, enter "0" in column 2.			TOTAL			TOTAL	

APPLICATION AS AMENDED – PART II

AMENDMENT 10/12/2011	(Column 1) CLAIMS REMAINING AFTER AMENDMENT		(Column 2) HIGHEST NUMBER PREVIOUSLY PAID FOR	(Column 3) PRESENT EXTRA	SMALL ENTITY RATE ($)	SMALL ENTITY ADDITIONAL FEE ($)	OR	OTHER THAN SMALL ENTITY RATE ($)	OTHER THAN SMALL ENTITY ADDITIONAL FEE ($)
Total (37 CFR 1.16(i))	* 29	Minus	** 29	= 0	X $ =		OR	X $60=	0
Independent (37 CFR 1.16(h))	* 1	Minus	***3	= 0	X $ =		OR	X $250=	0
☐ Application Size Fee (37 CFR 1.16(s))									
☐ FIRST PRESENTATION OF MULTIPLE DEPENDENT CLAIM (37 CFR 1.16(j))							OR		
					TOTAL ADD'L FEE		OR	TOTAL ADD'L FEE	0

AMENDMENT	(Column 1) CLAIMS REMAINING AFTER AMENDMENT		(Column 2) HIGHEST NUMBER PREVIOUSLY PAID FOR	(Column 3) PRESENT EXTRA	RATE ($)	ADDITIONAL FEE ($)	OR	RATE ($)	ADDITIONAL FEE ($)
Total (37 CFR 1.16(i))	*	Minus	**	=	X $ =		OR	X $ =	
Independent (37 CFR 1.16(h))	*	Minus	***	=	X $ =		OR	X $ =	
☐ Application Size Fee (37 CFR 1.16(s))									
☐ FIRST PRESENTATION OF MULTIPLE DEPENDENT CLAIM (37 CFR 1.16(j))							OR		
					TOTAL ADD'L FEE		OR	TOTAL ADD'L FEE	

* If the entry in column 1 is less than the entry in column 2, write "0" in column 3.

** If the "Highest Number Previously Paid For" IN THIS SPACE is less than 20, enter "20".

*** If the "Highest Number Previously Paid For" IN THIS SPACE is less than 3, enter "3".

The "Highest Number Previously Paid For" (Total or Independent) is the highest number found in the appropriate box in column 1.

Legal Instrument Examiner:
/KELLY HARRIS/

This collection of information is required by 37 CFR 1.16. The information is required to obtain or retain a benefit by the public which is to file (and by the USPTO to process) an application. Confidentiality is governed by 35 U.S.C. 122 and 37 CFR 1.14. This collection is estimated to take 12 minutes to complete, including gathering, preparing, and submitting the completed application form to the USPTO. Time will vary depending upon the individual case. Any comments on the amount of time you require to complete this form and/or suggestions for reducing this burden, should be sent to the Chief Information Officer, U.S. Patent and Trademark Office, U.S. Department of Commerce, P.O. Box 1450, Alexandria, VA 22313-1450. DO NOT SEND FEES OR COMPLETED FORMS TO THIS ADDRESS. **SEND TO: Commissioner for Patents, P.O. Box 1450, Alexandria, VA 22313-1450.**

If you need assistance in completing the form, call 1-800-PTO-9199 and select option 2.

UNITED STATES PATENT AND TRADEMARK OFFICE
COMMISSIONER FOR PATENTS
P.O.BOX 1450
ALEXANDRIA VA 22313-1451

PRESORTED
FIRST-CLASS MAIL
U.S. POSTAGE PAID
POSTEDIGITAL
NNNNN

MEDTRONIC MINIMED INC.
18000 DEVONSHIRE STREET
NORTHRIDGE, CA 91325-1219

Courtesy Reminder for
Application Serial No: 12/056,651

Attorney Docket No: P25732 US
Customer Number: 23608
Date of Electronic Notification: 07/13/2011

This is a courtesy reminder that new correspondence is available for this application. The official date of notification of the outgoing correspondence will be indicated on the form PTOL-90 accompanying the correspondence.

An email notification regarding the correspondence was sent to the following email address(es) associated with your customer number:
rs.docketingus@medtronic.com
medtronic_diabetes_docketing@cardinal-ip.com
Please verify that these email addresses are correct.

To view your correspondence online or update your email addresses, please visit us anytime at **https://sportal.uspto.gov/secure/myportal/privatepair.** If you have any questions, please email the Electronic Business Center (EBC) at EBC@uspto.gov or call 1-866-217-9197.

UNITED STATES PATENT AND TRADEMARK OFFICE

UNITED STATES DEPARTMENT OF COMMERCE
United States Patent and Trademark Office
Address: COMMISSIONER FOR PATENTS
P.O. Box 1450
Alexandria, Virginia 22313-1450
www.uspto.gov

APPLICATION NO.	FILING DATE	FIRST NAMED INVENTOR	ATTORNEY DOCKET NO.	CONFIRMATION NO.
12/056,651	03/27/2008	Himanshu Patel	P25732 US	9941

23608 7590 07/13/2011
MEDTRONIC MINIMED INC.
18000 DEVONSHIRE STREET
NORTHRIDGE, CA 91325-1219

EXAMINER
MESSERSMITH, ERIC

ART UNIT	PAPER NUMBER
3735	

NOTIFICATION DATE	DELIVERY MODE
07/13/2011	ELECTRONIC

Please find below and/or attached an Office communication concerning this application or proceeding.

The time period for reply, if any, is set in the attached communication.

Notice of the Office communication was sent electronically on above-indicated "Notification Date" to the following e-mail address(es):

medtronic_diabetes_docketing@cardinal-ip.com
rs.docketingus@medtronic.com

Office Action Summary	Application No.	Applicant(s)	
	12/056,651	PATEL ET AL.	
	Examiner	Art Unit	
	ERIC MESSERSMITH	3735	

-- The MAILING DATE of this communication appears on the cover sheet with the correspondence address --

Period for Reply

A SHORTENED STATUTORY PERIOD FOR REPLY IS SET TO EXPIRE 3 MONTH(S) OR THIRTY (30) DAYS, WHICHEVER IS LONGER, FROM THE MAILING DATE OF THIS COMMUNICATION.

- Extensions of time may be available under the provisions of 37 CFR 1.136(a). In no event, however, may a reply be timely filed after SIX (6) MONTHS from the mailing date of this communication.
- If NO period for reply is specified above, the maximum statutory period will apply and will expire SIX (6) MONTHS from the mailing date of this communication.
- Failure to reply within the set or extended period for reply will, by statute, cause the application to become ABANDONED (35 U.S.C. § 133). Any reply received by the Office later than three months after the mailing date of this communication, even if timely filed, may reduce any earned patent term adjustment. See 37 CFR 1.704(b).

Status

1)☒ Responsive to communication(s) filed on *27 March 2008*.

2a)☐ This action is **FINAL**. 2b)☒ This action is non-final.

3)☐ Since this application is in condition for allowance except for formal matters, prosecution as to the merits is closed in accordance with the practice under *Ex parte Quayle*, 1935 C.D. 11, 453 O.G. 213.

Disposition of Claims

4)☒ Claim(s) *1-29* is/are pending in the application.

4a) Of the above claim(s) _____ is/are withdrawn from consideration.

5)☐ Claim(s) _____ is/are allowed.

6)☒ Claim(s) *1-29* is/are rejected.

7)☐ Claim(s) _____ is/are objected to.

8)☐ Claim(s) _____ are subject to restriction and/or election requirement.

Application Papers

9)☐ The specification is objected to by the Examiner.

10)☒ The drawing(s) filed on *27 March 2008* is/are: a)☒ accepted or b)☐ objected to by the Examiner.

Applicant may not request that any objection to the drawing(s) be held in abeyance. See 37 CFR 1.85(a).

Replacement drawing sheet(s) including the correction is required if the drawing(s) is objected to. See 37 CFR 1.121(d).

11)☐ The oath or declaration is objected to by the Examiner. Note the attached Office Action or form PTO-152.

Priority under 35 U.S.C. § 119

12)☐ Acknowledgment is made of a claim for foreign priority under 35 U.S.C. § 119(a)-(d) or (f).

a)☐ All b)☐ Some * c)☐ None of:

1.☐ Certified copies of the priority documents have been received.

2.☐ Certified copies of the priority documents have been received in Application No. _____.

3.☐ Copies of the certified copies of the priority documents have been received in this National Stage application from the International Bureau (PCT Rule 17.2(a)).

* See the attached detailed Office action for a list of the certified copies not received.

Attachment(s)

1) ☒ Notice of References Cited (PTO-892)

2) ☐ Notice of Draftsperson's Patent Drawing Review (PTO-948)

3) ☒ Information Disclosure Statement(s) (PTO/SB/08) Paper No(s)/Mail Date *03/05/2010*.

4) ☐ Interview Summary (PTO-413) Paper No(s)/Mail Date. _____ .

5) ☐ Notice of Informal Patent Application

6) ☐ Other: _____.

DETAILED ACTION

Claim Rejections - 35 USC § 102

The following is a quotation of the appropriate paragraphs of 35 U.S.C. 102 that form the basis for the rejections under this section made in this Office action:

> A person shall be entitled to a patent unless –
>
> (b) the invention was patented or described in a printed publication in this or a foreign country or in public use or on sale in this country, more than one year prior to the date of application for patent in the United States.

Claims 1-3, 10-12, 14-18, 20-23 and 27-29 are rejected under 35 U.S.C. 102(b) as being anticipated by US 2006/083985 A1 to Brister et al. (hereinafter "Brister").

As to claim 1, Brister discloses a telemetered characteristic sensor transceiver (158) for exchanging data with at least one remote device, the transceiver comprising: a housing detachably coupled to a sensor located on a body of a user, the sensor producing a signal indicative of a user characteristic (para [0503]; Fig 15 -- receiver 158 may be a wired connection is detachably coupled to glucose sensor); a processor formed within the housing and in communication with the sensor for processing the signal produced by the sensor (see Fig 17A, element 176); a transmitter coupled to the processor for transmitting data to at least one remote device; a receiver coupled to the processor for receiving data from the at least one remote device (see Fig 17A, element 178); and a memory coupled to the processor for storing data (see para [0508]--flash memory), wherein the processor performs calculations using at least one of the signal produced by the sensor (para [507] – "input module 174 sends the [sensor] data stream to a processor 176 that processes the data stream…"), the data received from the at

least one remote device and the data stored in the memory (see para [0508]), and performs at least one of storing the calculations in the memory (para [0508] -- sensor data is stored prior to be compared and/or analyzed) and transmitting the calculations to the at least one remote device through the transmitter.

As to claim 2, Brister further discloses wherein the transceiver exchanges data with a plurality of remote devices in a network structure (see para [0514]).

As to claim 3, Brister further discloses wherein the transceiver exchanges data with the at least one remote device in a synchronous manner (see para [0507]).

As to claim 10, Brister further discloses wherein the data exchanged between the transceiver and the at least one remote device comprises at least one of: device configuration data; communication link configuration data; adaptive communication configuration data; glucose history data; and calibration data (para [0485]).

As to claim 11, Brister further discloses wherein the device configuration data comprises at least one of: a device identification; user information; and time information (para [0484] – "sensor manufacture").

As to claim 12, Brister further discloses wherein the communication link configuration data comprises at least one of: a communication rate; frequency information; and frequency hopping configuration information (see para [0477] --"In some embodiments, a second quartz crystal 154 provides the time base for the RF carrier frequency used for data transmissions from the RF transceiver.").

As to claim 14, Brister further discloses wherein the calibration data comprises at least one of: sensor initialization sequence and configuration information; and dynamic sensor initialization parameters (para [0488]).

As to claim 15, Brister further discloses wherein the processor calculates sensor glucose values using at least one of the signal received from the sensor, the data received from the at least one remote device and the data stored in the memory (para [0522] to [0523]).

As to claim 16, Brister further discloses wherein a rate of exchanging data between the transceiver and the at least one remote device is dynamically changed depending on a characteristic of the calculated sensor glucose values (see para [0530] – "If the data is not within the predetermined threshold, then the receiver can be configured to request additional reference analyte data.").

As to claim 17, Brister further discloses wherein a glucose calculation algorithm for calculating the sensor glucose values is stored in the memory (see para [0523] – "The sensor data point(s) can be smoothed (filtered) in certain embodiments using a filter, for example, a finite impulse response (FIR) or infinite impulse response (IIR) filter.").

As to claim 18, Brister further discloses wherein the processor stores the calculated sensor glucose values in the memory or transmits the calculated sensor glucose values to the at least one remote device through the transmitter (para [0514]).

As to claim 20, Brister further discloses wherein the receiver receives calibration data from the at least one remote device and the processor stores the received

calibration data in the memory. (see para [0524] and [0529])– reference data can come from another monitor).

As to claim 21, Brister further discloses wherein the processor performs a calibration using at least one of the calibration data stored in the memory, the signal received from the sensor and the calculated glucose sensor values (para [0529]).

As to claim 22, Brister further discloses wherein a calibration algorithm for performing the calibration is stored in the memory (see para [0521]).

As to claim 23, Brister further discloses comprising a display for displaying information processed by the processor (Fig 15, element 170).

As to claim 27, Brister further discloses wherein the housing is capable of detaching from the sensor and attaching to the at least one remote device (para [0514] – wired connection to external device 180).

As to claim 28, Brister further discloses wherein the processor communicates with the sensor via wireless means (para [0503]).

As to claim 29, Brister further discloses wherein the housing comprises a single communication port for facilitating at least two of: communication between the transceiver and the sensor; communication between the transceiver and the at least one remote device; and an electrical connection between the transceiver and a battery charger (para [0520] – "a data communications port").

Claim Rejections - 35 USC § 103

The following is a quotation of 35 U.S.C. 103(a) which forms the basis for all obviousness rejections set forth in this Office action:

> (a) A patent may not be obtained though the invention is not identically disclosed or described as set forth in section 102 of this title, if the differences between the subject matter sought to be patented and the prior art are such that the subject matter as a whole would have been obvious at the time the invention was made to a person having ordinary skill in the art to which said subject matter pertains. Patentability shall not be negatived by the manner in which the invention was made.

The factual inquiries set forth in *Graham* v. *John Deere Co.*, 383 U.S. 1, 148 USPQ 459 (1966), that are applied for establishing a background for determining obviousness under 35 U.S.C. 103(a) are summarized as follows:

1. Determining the scope and contents of the prior art.
2. Ascertaining the differences between the prior art and the claims at issue.
3. Resolving the level of ordinary skill in the pertinent art.
4. Considering objective evidence present in the application indicating obviousness or nonobviousness.

Claims 4-5 and 7 are rejected under 35 U.S.C. 103(a) as being unpatentable over Brister in view of US 2003/0130616 A1 to Steil et al. (hereinafter "Steil").

As to claims 4-5, Brister does not disclose wherein the transceiver wakes up from a sleep mode prior to exchanging data with the at least one remote device or further wherein the at least one remote device wakes up the transceiver.

However, Steil discloses a similar device wherein a transceiver wakes up from a sleep mode prior to exchanging data with the at least one remote device (para [0328]) and further wherein the at least one remote device wakes up the transceiver (para [0328]). It would have been obvious to one of ordinary skill in the art at the time the invention was made to combine the transceiver disclosed by Brister with the sleep mode and external device waking disclosed by Steil to conserve battery.

As to claim 7, Brister does not explicitly disclose wherein the transceiver periodically wakes up independent of the at least one remote device. However, Steil discloses wherein the transceiver periodically wakes up independent of the at least one

remote device (para [0328]). It would have been obvious to one of ordinary skill in the art at the time the invention was made to combine the transceiver disclosed by Brister with the periodic waking disclosed by Steil to conserve battery.

As to claim 7, Brister does not explicitly disclose wherein the glucose history data is exchanged according to a time interval. Steil discloses wherein the glucose history data is exchanged according to a time interval (para [0328]). It would have been obvious to one of ordinary skill in the art to combine the sensor transceiver disclosed by Brister with the time interval disclosed by Steil to save battery by only periodically sending glucose history data.

Claims 8-9 are rejected under 35 U.S.C. 103(a) as being unpatentable over Brister in view of US 2009/0076358 A1 to Reggiardo et al. (hereinafter "Reggiardo").

As to claim 8, Brister does not disclose wherein the transceiver exchanges data with the at least one remote device in an asynchronous manner. However, Reggiardo teaches exchanging data with at least one remote device in an asynchronous manner (para [0033]). It would have been obvious to one of ordinary skill in the art to combine the transceiver disclosed by Brister with the asynchronous data exchange disclosed by Reggiardo, since asynchronous data exchange was well-known to require less expensive components.

As to claim 9, Reggiardo further discloses the data exchanged in the asynchronous manner comprises at least one of: a blood glucose value (para ; and a request for glucose history data (para [0037]).

Claim 19 is rejected under 35 U.S.C. 103(a) as being unpatentable over Brister in view of US 2007/0197878 A1 (Shklarski).

As to claim 19, Brister does not explicitly disclose wherein the calculated sensor glucose values are secured via an encryption scheme before transmission to the at least one remote device. Shklarski teaches encrypting sensor data before transmisstion to an at least one remote device (para [0089]). Therefore, it would have been obvious to one of ordinary skill in the art at the time the invention was made to combine the transceiver disclosed by Brister with the encryption disclosed by Shklarski to maintain patient confidentiality.

Claim 24 is rejected under 35 U.S.C. 103(a) as being unpatentable over Brister in view of US 2004/0176667 A1 to Mihai et al. (hereinafter "Mihai").

As to claim 24, Brister does not disclose means for notifying the user that the at least one remote device is beyond a certain distance from the transceiver. Mihai discloses means for notifying the user that the at least one remote device is beyond a certain distance from the transceiver (para [0429]). It would have been obvious to one of ordinary skill in the art to combine the transceiver disclosed by Brister with the alerting means disclosed by Mihai to notify the patient or another that a connection is not operable.

Claims 25-26 are rejected under 35 U.S.C. 103(a) as being unpatentable over Brister in view of US 2007/0255126 A1 to Moberg et al. (hereinafter "Moberg").

As to claim, 25 . Brister does not disclose wherein a power for exchanging data between the transceiver and the at least one remote device is dynamically changed depending on a strength of a detected signal between the transceiver and the at least one remote device. Moberg discloses wherein a power for exchanging data between the transceiver and the at least one remote device is dynamically changed depending on a strength of a detected signal between the transceiver and the at least one remote device (para [0143]). It would have been obvious to one of ordinary skill in the art to combine the transceiver disclosed by Brister with the dynamic power disclosed by Moberg to conserve battery.

As to claim 26, Brister does not disclose 26. wherein a rate of exchanging data between the transceiver and the at least one remote device is dynamically changed depending on a power mode of at least one of the transceiver and the at least one remote device. Moberg discloses wherein a rate of exchanging data between the transceiver and the at least one remote device is dynamically changed depending on a power mode of at least one of the transceiver and the at least one remote device (para [0143]) It would have been obvious to one of ordinary skill in the art to combine the transceiver disclosed by Brister with the dynamic data rate disclosed by Moberg to conserve battery.

Claim 6 is rejected under 35 U.S.C. 103(a) as being unpatentable over Brister in view of Steil and further in view of US 2005/0043594 to Dinsmoor et al. (hereinafter "Dinsmoor").

As to claim 6, Brister as modified by Steil discloses wake signal from an external device with an RF signal (see para [0326]), but does not disclose an ultrasonic sensor for receiving an ultrasonic signal from the at least one remote device when the at least one remote device transmits the ultrasonic signal to the transceiver to wake up the transceiver. Dinsmoor teaches that an RF sensor and signal can be substituted for an ultrasonic sensor for receiving an ultrasonic signal from the at least one remote device when the at least one remote device transmits the ultrasonic signal to the transceiver to wake up the transceiver (see para [0008]). Thus, it would have been obvious to one of ordinary skill in the art to provide the ultrasound sensor and ultrasound signal disclosed by Dinsmoor, since doing so would have been no more than a simple substitution of known elements to achieve predictable results.

Conclusion

The prior art made of record and not relied upon is considered pertinent to applicant's disclosure. US 2005/0182306 A1 to Sloan and US 205/0261559 A1 to Mumford et al. each teach transceiver units in conjunction with external devices.

Any inquiry concerning this communication or earlier communications from the examiner should be directed to ERIC MESSERSMITH whose telephone number is (571)270-7081. The examiner can normally be reached on Mon-Fri 8:30 a.m. - 5:00 p.m.

If attempts to reach the examiner by telephone are unsuccessful, the examiner's supervisor, Charles Marmor II can be reached on (571) 272-4730. The fax phone

number for the organization where this application or proceeding is assigned is 571-273-8300.

Information regarding the status of an application may be obtained from the Patent Application Information Retrieval (PAIR) system. Status information for published applications may be obtained from either Private PAIR or Public PAIR. Status information for unpublished applications is available through Private PAIR only. For more information about the PAIR system, see http://pair-direct.uspto.gov. Should you have questions on access to the Private PAIR system, contact the Electronic Business Center (EBC) at 866-217-9197 (toll-free). If you would like assistance from a USPTO Customer Service Representative or access to the automated information system, call 800-786-9199 (IN USA OR CANADA) or 571-272-1000.

/Miranda Le/
Supervisory Patent Examiner, Art Unit 3735

/ERIC MESSERSMITH/
Examiner, Art Unit 3735
06/20/2011

Notice of References Cited	Application/Control No. 12/056,651	Applicant(s)/Patent Under Reexamination PATEL ET AL.	
	Examiner ERIC MESSERSMITH	Art Unit 3735	Page 1 of 1

U.S. PATENT DOCUMENTS

*		Document Number Country Code-Number-Kind Code	Date MM-YYYY	Name	Classification
*	A	US-2006/0183985	08-2006	Brister et al.	600/316
*	B	US-2003/0130616	07-2003	Steil et al.	604/66
*	C	US-2009/0076358	03-2009	Reggiardo et al.	600/365
*	D	US-2007/0197878	08-2007	Shklarski, Dror	600/300
*	E	US-2004/0176667	09-2004	Mihai et al.	600/300
*	F	US-2007/0255126	11-2007	Moberg et al.	600/365
*	G	US-2005/0043594	02-2005	Dinsmoor et al.	600/300
*	H	US-2005/0182306	08-2005	Sloan, Mark K.	600/300
*	I	US-2005/0261559	11-2005	Mumford et al.	600/300
	J	US-			
	K	US-			
	L	US-			
	M	US-			

FOREIGN PATENT DOCUMENTS

*		Document Number Country Code-Number-Kind Code	Date MM-YYYY	Country	Name	Classification
	N					
	O					
	P					
	Q					
	R					
	S					
	T					

NON-PATENT DOCUMENTS

*		Include as applicable: Author, Title Date, Publisher, Edition or Volume, Pertinent Pages)
	U	
	V	
	W	
	X	

*A copy of this reference is not being furnished with this Office action. (See MPEP § 707.05(a).)
Dates in MM-YYYY format are publication dates. Classifications may be US or foreign.

Index of Claims	Application/Control No.	Applicant(s)/Patent Under Reexamination
	12056651	PATEL ET AL.
	Examiner	**Art Unit**
	ERIC MESSERSMITH	3735

✓	Rejected	-	Cancelled	N	Non-Elected	A	Appeal
=	Allowed	÷	Restricted	I	Interference	O	Objected

☐ Claims renumbered in the same order as presented by applicant ☐ CPA ☐ T.D. ☐ R.1.47

CLAIM		DATE								
Final	Original	06/20/2011								
	1	✓								
	2	✓								
	3	✓								
	4	✓								
	5	✓								
	6	✓								
	7	✓								
	8	✓								
	9	✓								
	10	✓								
	11	✓								
	12	✓								
	13	✓								
	14	✓								
	15	✓								
	16	✓								
	17	✓								
	18	✓								
	19	✓								
	20	✓								
	21	✓								
	22	✓								
	23	✓								
	24	✓								
	25	✓								
	26	✓								
	27	✓								
	28	✓								
	29	✓								

Search Notes	Application/Control No.	Applicant(s)/Patent Under Reexamination
	12056651	PATEL ET AL.
	Examiner	**Art Unit**
	ERIC MESSERSMITH	3735

SEARCHED

Class	Subclass	Date	Examiner
600	300, 365		

SEARCH NOTES

Search Notes	Date	Examiner
Inventor search (see EAST search history)	06/20/2011	EJM
EAST Search (see attached)	06/20/2011	EJM

INTERFERENCE SEARCH

Class	Subclass	Date	Examiner

EAST Search History

EAST Search History (Prior Art)

Ref #	Hits	Search Query	DBs	Default Operator	Plurals	Time Stamp
L2	826	brauker.in. or brister.in.	US-PGPUB; USPAT; EPO; JPO; DERWENT	OR	ON	2011/06/20 11:37
L3	826	L2	US-PGPUB; USPAT; EPO; JPO; DERWENT	OR	ON	2011/06/20 11:37
L4	0	3 and encrypt$4 near5 external	US-PGPUB; USPAT; EPO; JPO; DERWENT	OR	ON	2011/06/20 11:38
L5	0	3 and encrypt$4 with external	US-PGPUB; USPAT; EPO; JPO; DERWENT	OR	ON	2011/06/20 11:38
L6	0	3 and encrypt$4	US-PGPUB; USPAT; EPO; JPO; DERWENT	OR	ON	2011/06/20 11:38
L7	6139	600/300,365.ccls.	US-PGPUB; USPAT; EPO; JPO; DERWENT	OR	ON	2011/06/20 11:40
L8	6139	L7	US-PGPUB; USPAT; EPO; JPO; DERWENT	OR	ON	2011/06/20 11:40
L9	595	8 and encrypt$4	US-PGPUB; USPAT; EPO; JPO; DERWENT	OR	ON	2011/06/20 11:40
L10	30	8 and encrypt$4 with external$4	US-PGPUB; USPAT; EPO; JPO; DERWENT	OR	ON	2011/06/20 11:40
L11	583	encrypt$4 with device and glucose	US-PGPUB; USPAT; EPO; JPO; DERWENT	OR	ON	2011/06/20 11:42
L12	182	8 and encrypt$4 with device	US-PGPUB; USPAT; EPO; JPO; DERWENT	OR	ON	2011/06/20 11:42
L13	7	8 and encrypt$4 with device same glucose	US-PGPUB; USPAT; EPO; JPO; DERWENT	OR	ON	2011/06/20 11:42
L14	53	8 and encrypt$4 with device and glucose with data	US-PGPUB; USPAT; EPO; JPO; DERWENT	OR	ON	2011/06/20 11:46
L15	1815	600/365,347.ccls.	US-PGPUB; USPAT; EPO; JPO; DERWENT	OR	ON	2011/06/20 13:31

L16	542	L15 and proximity	US-PGPUB; USPAT; EPO; JPO; DERWENT	OR	ON	2011/06/20 13:31
L17	8	L15 and proximity with (alert$4 alarm$4 audibl$4 aud$4)	US-PGPUB; USPAT; EPO; JPO; DERWENT	OR	ON	2011/06/20 13:32
L18	37	L15 and bluetooth near5 range	US-PGPUB; USPAT; EPO; JPO; DERWENT	OR	ON	2011/06/20 13:34
L19	48	L15 and display$4 near5 connection	US-PGPUB; USPAT; EPO; JPO; DERWENT	OR	ON	2011/06/20 13:35
L20	90	2 and out near2 range	US-PGPUB; USPAT; EPO; JPO; DERWENT	OR	ON	2011/06/20 13:37
L21	4	alarm with range with connection with bluetooth	US-PGPUB; USPAT; EPO; JPO; DERWENT	OR	ON	2011/06/20 13:38
L22	44	alarm with range with bluetooth	US-PGPUB; USPAT; EPO; JPO; DERWENT	OR	ON	2011/06/20 13:38
L23	77	indicator near bluetooth	US-PGPUB; USPAT; EPO; JPO; DERWENT	OR	ON	2011/06/20 13:38
L24	2	7 and signal near2 range near2 (display screen indicator)	US-PGPUB; USPAT; EPO; JPO; DERWENT	OR	ON	2011/06/20 13:40
L25	841	signal near2 range near2 (display screen indicator)	US-PGPUB; USPAT; EPO; JPO; DERWENT	OR	ON	2011/06/20 13:41
L26	85	25 and "600"/$.ccls.	US-PGPUB; USPAT; EPO; JPO; DERWENT	OR	ON	2011/06/20 13:41
L27	30	signal near2 range near2 (display screen indicator) with (wireless connection)	US-PGPUB; USPAT; EPO; JPO; DERWENT	OR	ON	2011/06/20 13:42
L28	14624	signal near2 strength with (display screen indicator)	US-PGPUB; USPAT; EPO; JPO; DERWENT	OR	ON	2011/06/20 13:42
L29	316	28 and "600"/$.ccls.	US-PGPUB; USPAT; EPO; JPO; DERWENT	OR	ON	2011/06/20 13:42
L30	6	28 and 600/365.ccls.	US-PGPUB; USPAT; EPO; JPO; DERWENT	OR	ON	2011/06/20 13:43
L31	327	alert near5 signal near5 (weak or loss or lost)	US-PGPUB; USPAT; EPO; JPO; DERWENT	OR	ON	2011/06/20 13:44

L32	380	alert$ near5 signal near5 (weak or loss or lost)	US-PGPUB; USPAT; EPO; JPO; DERWENT	OR	ON	2011/06/20 13:44
L33	0	32 and 600/365.ccls.	US-PGPUB; USPAT; EPO; JPO; DERWENT	OR	ON	2011/06/20 13:45
L34	294	7 and (alert$4 alarm$4 indicat$ beep$4) with outside with range	US-PGPUB; USPAT; EPO; JPO; DERWENT	OR	ON	2011/06/20 13:45
L35	24	7 and (alert$4 alarm$4 indicat$ beep$4) with outside with range same wireless	US-PGPUB; USPAT; EPO; JPO; DERWENT	OR	ON	2011/06/20 13:45
L36	5	7 and (dynamic$4 chang$4) with power$4 with (increas$ rais$4 greater) with signal	US-PGPUB; USPAT; EPO; JPO; DERWENT	OR	ON	2011/06/20 13:53
L37	12	7 and (dynamic$4 chang$4) with power$4 with wireless	US-PGPUB; USPAT; EPO; JPO; DERWENT	OR	ON	2011/06/20 13:54
S1	6139	600/300,365.ccls.	US-PGPUB; USPAT; EPO; JPO; DERWENT	OR	ON	2011/06/17 09:58
S2	90	((HIMANSHU) near2 (PATEL)).INV.	US-PGPUB; USPAT	OR	ON	2011/06/17 10:04
S3	91	((WAYNE) near2 (MORGAN)).INV.	US-PGPUB; USPAT	OR	ON	2011/06/17 10:04
S4	23	((EDWARD) near2 (CHERNOFF)).INV.	US-PGPUB; USPAT	OR	ON	2011/06/17 10:04
S5	109	((JOHN) near2 (MASTROTOTARO)).INV.	US-PGPUB; USPAT	OR	ON	2011/06/17 10:04
S6	195	S2 or S3 or S4	US-PGPUB; USPAT; EPO; JPO; DERWENT	OR	ON	2011/06/17 10:04
S7	199	("20080060955" "7278983" "7722536" "7901394" "20040167464" "20060173260" "20070060869" "20070060870" "20070093786" "20070293843" "20090048501" "20090069744" "20090085768" "20090227855" "20100099972" "20100099973" "20100235439" "20110022025" "4545382" "6063637" "5212988" "5593852" "5667983" "5837199" "5965380" "6042751" "6083710" "6121009" "6150128" "6162611" "4445885" "4758323" "4788150" "4795707" "5551422" "5665215" "5670057" "5693577" "5695623" "5951521" "6027479" "6037178" "6061128" "6071739" "6077660" "6107083" "6221238" "6221238" "6287765" "6350431" "6462007"	US-PGPUB; USPAT; EPO; JPO; DERWENT	OR	ON	2011/06/17 10:04

		"6641533" "7677409" "20020002326" "20020049480" "20020058906" "20040073095" "20060253085" "20060258761" "20070156033" "20070244379" "20080021666" "20080039770" "20080076997" "20080083773" "20080094804" "20090033333" "20090061076" "20090177068" "20090178923" "20090267774" "20090267775" "20090270705" "20090287073" "20100053556" "20100063371" "20100147870" "20100331644" "5686888" "4268756" "4360729" "4517566" "4588978" "4604740" "5008678" "5197668" "5203497" "5245396" "5272476" "5313944" "5321273" "5483767" "5499292" "5504325" "5506410" "5511335" "5546695" "5589940" "5664035" "5666159").pn.				
S12	199	("20080060955" "7278983" "7722536" "7901394" "20040167464" "20060173260" "20070060869" "20070060870" "20070093786" "20070293843" "20090048501" "20090069744" "20090085768" "20090227855" "20100099972" "20100099973" "20100235439" "20110022025" "4545382" "6063637" "5212988" "5593852" "5667983" "5837199" "5965380" "6042751" "6083710" "6121009" "6150128" "6162611" "4445885" "4758323" "4788150" "4795707" "5551422" "5665215" "5670057" "5693577" "5695623" "5951521" "6027479" "6037178" "6061128" "6071739" "6077660" "6107083" "6221238" "6221238" "6287765" "6350431" "6462007" "6641533" "7677409" "20020002326" "20020049480" "20020058906" "20040073095" "20060253085" "20060258761" "20070156033" "20070244379" "20080021666" "20080039770" "20080076997" "20080083773" "20080094804" "20090033333" "20090061076" "20090177068" "20090178923" "20090267774" "20090267775" "20090270705" "20090287073" "20100053556" "20100063371" "20100147870" "20100331644" "5686888" "4268756" "4360729" "4517566" "4588978" "4604740" "5008678"	US-PGPUB; USPAT; EPO; JPO; DERWENT	OR	ON	2011/06/17 13:00

		"5197668" "5203497" "5245396" "5272476" "5313944" "5321273" "5483767" "5499292" "5504325" "5506410" "5511335" "5546695" "5589940" "5664035" "5666159").pn.				
S13	8	S12 and dexcom	US-PGPUB; USPAT; EPO; JPO; DERWENT	OR	ON	2011/06/17 13:00
S14	823	brauker.in. or brister.in.	US-PGPUB; USPAT; EPO; JPO; DERWENT	OR	ON	2011/06/17 13:17
S15	573	S14 and glucose	US-PGPUB; USPAT; EPO; JPO; DERWENT	OR	ON	2011/06/17 13:17
S16	4430	lord.in.	US-PGPUB; USPAT; EPO; JPO; DERWENT	OR	ON	2011/06/17 13:17
S17	178	S16 and glucose	US-PGPUB; USPAT; EPO; JPO; DERWENT	OR	ON	2011/06/17 13:17
S18	751	S17 or S15	US-PGPUB; USPAT; EPO; JPO; DERWENT	OR	ON	2011/06/17 13:18
S19	112	S18 and housing with (attach$6 detach$6 mate$2 mating$4 $2coupl$4)	US-PGPUB; USPAT; EPO; JPO; DERWENT	OR	ON	2011/06/17 13:19
S20	54	S19 and housing with (transmit$6 transceiv$4 wireless communicat $4)	US-PGPUB; USPAT; EPO; JPO; DERWENT	OR	ON	2011/06/17 13:20
S21	1815	600/365,347.ccls.	US-PGPUB; USPAT; EPO; JPO; DERWENT	OR	ON	2011/06/17 13:21
S22	20	S21 and (tranceiv$4 transmit$4 communicat$4 wireless$4 telemeter$4 telemetr$4) with wake	US-PGPUB; USPAT; EPO; JPO; DERWENT	OR	ON	2011/06/17 13:22
S23	3	S20 and wake	US-PGPUB; USPAT; EPO; JPO; DERWENT	OR	ON	2011/06/17 13:24
S24	565	S21 and (tranceiv$4 transmit$4 communicat$4 wireless$4 telemeter$4 telemetr$4) with (activat$4 power$4)	US-PGPUB; USPAT; EPO; JPO; DERWENT	OR	ON	2011/06/17 13:51
S25	9	S21 and (tranceiv$4 transmit$4 communicat$4 wireless$4 telemeter$4 telemetr$4) with (activat$4 power$4) with (two-way or two adj way or bi $4direction$4)	US-PGPUB; USPAT; EPO; JPO; DERWENT	OR	ON	2011/06/17 13:52

S26	7	S21 and (tranceiv$4 transmit$4 communicat$4 wireless$4 telemeter$4 telemetr$4) with (activat$4 power$4) with (two-way or two adj way or bi $4direction$4) and processor with (tranceiv$4 transmit$4 communicat$4 wireless$4 telemeter$4 telemetr$4)	US-PGPUB; USPAT; EPO; JPO; DERWENT	OR	ON	2011/06/17 13:53
S27	16	S18 and housing with (attach$6 detach$6 mate$2 mating$4 $2coupl$4) with ($5process$3)	US-PGPUB; USPAT; EPO; JPO; DERWENT	OR	ON	2011/06/17 13:55
S28	199	("20080060955" "7278983" "7722536" "7901394" "20040167464" "20060173260" "20070060869" "20070060870" "20070093786" "20070293843" "20090048501" "20090069744" "20090085768" "20090227855" "20100099972" "20100099973" "20100235439" "20110022025" "4545382" "6063637" "5212988" "5593852" "5667983" "5837199" "5965380" "6042751" "6083710" "6121009" "6150128" "6162611" "4445885" "4758323" "4788150" "4795707" "5551422" "5665215" "5670057" "5693577" "5695623" "5951521" "6027479" "6037178" "6061128" "6071739" "6077660" "6107083" "6221238" "6221238" "6287765" "6350431" "6462007" "6641533" "7677409" "20020002326" "20020049480" "20020058906" "20040073095" "20060253085" "20060258761" "20070156033" "20070244379" "20080021666" "20080039770" "20080076997" "20080083773" "20080094804" "20090033333" "20090061076" "20090177068" "20090178923" "20090267774" "20090267775" "20090270705" "20090287073" "20100053556" "20100063371" "20100147870" "20100331644" "5686888" "4268756" "4360729" "4517566" "4588978" "4604740" "5008678" "5197668" "5203497" "5245396" "5272476" "5313944" "5321273" "5483767" "5499292" "5504325" "5506410" "5511335" "5546695" "5589940" "5664035" "5666159").pn.	US-PGPUB; USPAT; EPO; JPO; DERWENT	OR	ON	2011/06/17 16:16

S29	28	S28 and $synchron$5	US-PGPUB; USPAT; EPO; JPO; DERWENT	OR	ON	2011/06/17 16:16
S30	823	brauker.in. or brister.in.	US-PGPUB; USPAT; EPO; JPO; DERWENT	OR	ON	2011/06/17 16:16
S31	823	S30	US-PGPUB; USPAT; EPO; JPO; DERWENT	OR	ON	2011/06/17 16:16
S32	3	S28 and wake with sleep adj mode	US-PGPUB; USPAT; EPO; JPO; DERWENT	OR	ON	2011/06/17 16:18
S33	0	S30 and wake with sleep adj mode	US-PGPUB; USPAT; EPO; JPO; DERWENT	OR	ON	2011/06/17 16:19
S34	6139	600/300,365.ccls.	US-PGPUB; USPAT; EPO; JPO; DERWENT	OR	ON	2011/06/17 16:19
S35	21	S34 and wake with sleep adj mode	US-PGPUB; USPAT; EPO; JPO; DERWENT	OR	ON	2011/06/17 16:19
S36	3	S34 and wake with ultraso$6	US-PGPUB; USPAT; EPO; JPO; DERWENT	OR	ON	2011/06/17 16:19
S37	1783	A61b005/145.ipc.	US-PGPUB; USPAT; EPO; JPO; DERWENT	OR	ON	2011/06/17 16:20
S38	3	S36 and wake with ultraso$6	US-PGPUB; USPAT; EPO; JPO; DERWENT	OR	ON	2011/06/17 16:20
S39	3	S36 and (sleep activat$4) with ultraso$6	US-PGPUB; USPAT; EPO; JPO; DERWENT	OR	ON	2011/06/17 16:21
S40	312	(sleep activat$4) with mode with ultraso$6	US-PGPUB; USPAT; EPO; JPO; DERWENT	OR	ON	2011/06/17 16:21
S41	465	S31 and implant$4	US-PGPUB; USPAT; EPO; JPO; DERWENT	OR	ON	2011/06/17 16:21
S42	6	(sleep activat$4) with mode with ultraso$6 with wak$4	US-PGPUB; USPAT; EPO; JPO; DERWENT	OR	ON	2011/06/17 16:22
S43	0	S34 with power$4 with ultraso$6 with (battery or conserv$4)	US-PGPUB; USPAT; EPO; JPO; DERWENT	OR	ON	2011/06/17 16:23
S44	0	S34 with mode with ultraso$6	US-PGPUB; USPAT; EPO; JPO; DERWENT	OR	ON	2011/06/17 16:23

S45	15	S34 and power$4 with ultraso$6 with (battery or conserv$4)	US-PGPUB; USPAT; EPO; JPO; DERWENT	OR	ON	2011/06/17 16:23
S46	5	S34 and periodic$4 with (conserv $4 save saving extend$4 length$4) with battery	US-PGPUB; USPAT; EPO; JPO; DERWENT	OR	ON	2011/06/17 16:32
S47	58	S34 and periodic$4 near7 battery	US-PGPUB; USPAT; EPO; JPO; DERWENT	OR	ON	2011/06/17 16:37
S48	265	S34 and periodic$4 near5 transmit $4	US-PGPUB; USPAT; EPO; JPO; DERWENT	OR	ON	2011/06/17 16:39
S49	31	S48 and asynchronous$4	US-PGPUB; USPAT; EPO; JPO; DERWENT	OR	ON	2011/06/17 16:43
S50	0	2006/0183985.pn.	US-PGPUB; USPAT; EPO; JPO; DERWENT	OR	ON	2011/06/17 17:08
S51	2	"20060183985".pn.	US-PGPUB; USPAT; EPO; JPO; DERWENT	OR	ON	2011/06/17 17:09
S52	1	S51 and transmit$4	US-PGPUB; USPAT; EPO; JPO; DERWENT	OR	ON	2011/06/17 17:09
S53	1	S51 and transmit$4 same request	US-PGPUB; USPAT; EPO; JPO; DERWENT	OR	ON	2011/06/17 17:12
S54	2	"20050043594".pn.	US-PGPUB; USPAT; EPO; JPO; DERWENT	OR	ON	2011/06/17 17:17
S55	0	S34 and asynchronous$ with expens$4	US-PGPUB; USPAT; EPO; JPO; DERWENT	OR	ON	2011/06/17 17:42
S56	281	S34 and asynchronous$	US-PGPUB; USPAT; EPO; JPO; DERWENT	OR	ON	2011/06/17 17:42
S57	0	S34 and asynchronous$ with cheap$4	US-PGPUB; USPAT; EPO; JPO; DERWENT	OR	ON	2011/06/17 17:42
S58	61	S34 and asynchronous$ with data and glucose	US-PGPUB; USPAT; EPO; JPO; DERWENT	OR	ON	2011/06/17 17:42
S59	9	S34 and asynchronous$ with data and glucose and hopping	US-PGPUB; USPAT; EPO; JPO; DERWENT	OR	ON	2011/06/17 17:43
S60	8	S34 and asynchronous$ with data and glucose and scanning	US-PGPUB; USPAT; EPO; JPO; DERWENT	OR	ON	2011/06/17 17:43

6/ 20/ 2011 2:35:38 PM

C:\Documents and Settings\emessersmith\My Documents\EAST\Workspaces\12056651\12056651.wsp

PTO/SB/08a (01-10)
Approved for use through 07/31/2012. OMB 0651-0031
U.S. Patent and Trademark Office; U.S. DEPARTMENT OF COMMERCE
Under the Paperwork Reduction Act of 1995, no persons are required to respond to a collection of information unless it contains a valid OMB control number.

INFORMATION DISCLOSURE STATEMENT BY APPLICANT

(Not for submission under 37 CFR 1.99)

Application Number	12056651
Filing Date	2008-03-27
First Named Inventor	Himanshu Patel
Art Unit	3735
Examiner Name	NASSER, ROBERT L
Attorney Docket Number	P25732 US

U.S.PATENTS Remove

Examiner Initial*	Cite No	Patent Number	Kind Code[1]	Issue Date	Name of Patentee or Applicant of cited Document	Pages,Columns,Lines where Relevant Passages or Relevant Figures Appear
	1					

If you wish to add additional U.S. Patent citation information please click the Add button. Add

U.S.PATENT APPLICATION PUBLICATIONS Remove

Examiner Initial*	Cite No	Publication Number	Kind Code[1]	Publication Date	Name of Patentee or Applicant of cited Document	Pages,Columns,Lines where Relevant Passages or Relevant Figures Appear
	1	20020158775	A1	2002-10-31	Wallace	
	2	20030208110	A1	2003-11-06	Mault et al.	
	3	20030208113	A1	2003-11-06	Mault et al.	
	4	20050102167	A1	2005-05-12	Kapoor	

If you wish to add additional U.S. Published Application citation information please click the Add button. Add

FOREIGN PATENT DOCUMENTS Remove

Examiner Initial*	Cite No	Foreign Document Number[3]	Country Code[2] ¡	Kind Code[4]	Publication Date	Name of Patentee or Applicant of cited Document	Pages,Columns,Lines where Relevant Passages or Relevant Figures Appear	T[5]

ALL REFERENCES CONSIDERED EXCEPT WHERE LINED THROUGH. /E.M./

INFORMATION DISCLOSURE STATEMENT BY APPLICANT (Not for submission under 37 CFR 1.99)		
	Application Number	12056651
	Filing Date	2008-03-27
	First Named Inventor	Himanshu Patel
	Art Unit	3735
	Examiner Name	NASSER, ROBERT L
	Attorney Docket Number	P25732 US

	1	03103301	WO	A2	2003-12-11			☐
	2	03103301	WO	A3	2003-12-11			☐

If you wish to add additional Foreign Patent Document citation information please click the Add button Add

NON-PATENT LITERATURE DOCUMENTS Remove

Examiner Initials*	Cite No	Include name of the author (in CAPITAL LETTERS), title of the article (when appropriate), title of the item (book, magazine, journal, serial, symposium, catalog, etc), date, pages(s), volume-issue number(s), publisher, city and/or country where published.	T[5]
	1	PCT Search Report and Written Opinion for PCT/US2008/078504	☐

If you wish to add additional non-patent literature document citation information please click the Add button Add

EXAMINER SIGNATURE

Examiner Signature	/Eric Messersmith/	Date Considered	06/20/2011

*EXAMINER: Initial if reference considered, whether or not citation is in conformance with MPEP 609. Draw line through a citation if not in conformance and not considered. Include copy of this form with next communication to applicant.

[1] See Kind Codes of USPTO Patent Documents at www.USPTO.GOV or MPEP 901.04. [2] Enter office that issued the document, by the two-letter code (WIPO Standard ST.3). [3] For Japanese patent documents, the indication of the year of the reign of the Emperor must precede the serial number of the patent document. [4] Kind of document by the appropriate symbols as indicated on the document under WIPO Standard ST.16 if possible. [5] Applicant is to place a check mark here if English language translation is attached.

ALL REFERENCES CONSIDERED EXCEPT WHERE LINED THROUGH. /E.M./

PLUS Search Results for S/N 12056651, Searched Fri Jun 17 09:32:35 EDT 2011

The Patent Linguistics Utility System (PLUS) is a USPTO automated search system for U.S. Patents from 1971 to the present PLUS is a query-by-example search system which produces a list of patents that are most closely related linguistically to the application searched. This search was prepared by the staff of the Scientific and Technical Information Center, SIRA.

20080060955 99
7278983 75
7722536 75
7901394 75
20040167464 75
20060173260 75
20070060869 75
20070060870 75
20070093786 75
20070293843 75
20090048501 75
20090069744 75
20090085768 75
20090227855 75
20100099972 75
20100099973 75
20100235439 75
20110022025 75
4545382 74
6063637 74
5212988 74
5593852 74
5667983 74
5837199 74
5965380 74
6042751 74
6083710 74
6121009 74
6150128 74
6162611 74
4445885 74
4758323 74
4788150 74
4795707 74
5551422 74
5665215 74
5670057 74
5693577 74
5695623 74
5951521 74
6027479 74
6037178 74
6061128 74
6071739 74
6077660 74
6107083 74
6221238 74
6221238 74
6287765 74
6350431 74
6462007 74
6641533 74
7677409 74
20020002326 74
20020049480 74
20020058906 74
20040073095 74
20060253085 74
20060258761 74
20070156033 74
20070244379 74
20080021666 74
20080039770 74
20080076997 74
20080083773 74
20080094804 74
20090033333 74
20090061076 74
20090177068 74
20090178923 74
20090267774 74
20090267775 74
20090270705 74
20090287073 74
20100053556 74
20100063371 74
20100147870 74
20100331644 74
5686888 73
4268756 73
4360729 73
4517566 73
4588978 73
4604740 73
5008678 73
5197668 73
5203497 73
5245396 73
5272476 73
5313944 73
5321273 73
5483767 73
5499292 73
5504325 73
5506410 73
5511335 73
5546695 73
5589940 73
5664035 73
5666159 73

PTO/SB/08a (01-10)
Approved for use through 07/31/2012. OMB 0651-0031
U.S. Patent and Trademark Office; U.S. DEPARTMENT OF COMMERCE

Under the Paperwork Reduction Act of 1995, no persons are required to respond to a collection of information unless it contains a valid OMB control number.

INFORMATION DISCLOSURE STATEMENT BY APPLICANT

(Not for submission under 37 CFR 1.99)

Application Number	12056651
Filing Date	2008-03-27
First Named Inventor	Himanshu Patel
Art Unit	3735
Examiner Name	NASSER, ROBERT L
Attorney Docket Number	P25732 US

U.S.PATENTS Remove

Examiner Initial*	Cite No	Patent Number	Kind Code[1]	Issue Date	Name of Patentee or Applicant of cited Document	Pages,Columns,Lines where Relevant Passages or Relevant Figures Appear
	1					

If you wish to add additional U.S. Patent citation information please click the Add button. Add

U.S.PATENT APPLICATION PUBLICATIONS Remove

Examiner Initial*	Cite No	Publication Number	Kind Code[1]	Publication Date	Name of Patentee or Applicant of cited Document	Pages,Columns,Lines where Relevant Passages or Relevant Figures Appear
	1	20020158775	A1	2002-10-31	Wallace	
	2	20030208110	A1	2003-11-06	Mault et al.	
	3	20030208113	A1	2003-11-06	Mault et al.	
	4	20050102167	A1	2005-05-12	Kapoor	

If you wish to add additional U.S. Published Application citation information please click the Add button. Add

FOREIGN PATENT DOCUMENTS Remove

Examiner Initial*	Cite No	Foreign Document Number[3]	Country Code[2] ¡	Kind Code[4]	Publication Date	Name of Patentee or Applicant of cited Document	Pages,Columns,Lines where Relevant Passages or Relevant Figures Appear	T[5]

INFORMATION DISCLOSURE STATEMENT BY APPLICANT (Not for submission under 37 CFR 1.99)	Application Number	12056651
	Filing Date	2008-03-27
	First Named Inventor	Himanshu Patel
	Art Unit	3735
	Examiner Name	NASSER, ROBERT L
	Attorney Docket Number	P25732 US

	1	03103301	WO	A2	2003-12-11			☐
	2	03103301	WO	A3	2003-12-11			☐

If you wish to add additional Foreign Patent Document citation information please click the Add button Add

NON-PATENT LITERATURE DOCUMENTS Remove

Examiner Initials*	Cite No	Include name of the author (in CAPITAL LETTERS), title of the article (when appropriate), title of the item (book, magazine, journal, serial, symposium, catalog, etc), date, pages(s), volume-issue number(s), publisher, city and/or country where published.	T[5]
	1	PCT Search Report and Written Opinion for PCT/US2008/078504	☐

If you wish to add additional non-patent literature document citation information please click the Add button Add

EXAMINER SIGNATURE

Examiner Signature		Date Considered	

*EXAMINER: Initial if reference considered, whether or not citation is in conformance with MPEP 609. Draw line through a citation if not in conformance and not considered. Include copy of this form with next communication to applicant.

[1] See Kind Codes of USPTO Patent Documents at www.USPTO.GOV or MPEP 901.04. [2] Enter office that issued the document, by the two-letter code (WIPO Standard ST.3). [3] For Japanese patent documents, the indication of the year of the reign of the Emperor must precede the serial number of the patent document. [4] Kind of document by the appropriate symbols as indicated on the document under WIPO Standard ST.16 if possible. [5] Applicant is to place a check mark here if English language translation is attached.

INFORMATION DISCLOSURE STATEMENT BY APPLICANT (Not for submission under 37 CFR 1.99)	Application Number	12056651
	Filing Date	2008-03-27
	First Named Inventor	Himanshu Patel
	Art Unit	3735
	Examiner Name	NASSER, ROBERT L
	Attorney Docket Number	P25732 US

CERTIFICATION STATEMENT

Please see 37 CFR 1.97 and 1.98 to make the appropriate selection(s):

☐ That each item of information contained in the information disclosure statement was first cited in any communication from a foreign patent office in a counterpart foreign application not more than three months prior to the filing of the information disclosure statement. See 37 CFR 1.97(e)(1).

OR

☐ That no item of information contained in the information disclosure statement was cited in a communication from a foreign patent office in a counterpart foreign application, and, to the knowledge of the person signing the certification after making reasonable inquiry, no item of information contained in the information disclosure statement was known to any individual designated in 37 CFR 1.56(c) more than three months prior to the filing of the information disclosure statement. See 37 CFR 1.97(e)(2).

☐ See attached certification statement.

☐ Fee set forth in 37 CFR 1.17 (p) has been submitted herewith.

☒ None

SIGNATURE

A signature of the applicant or representative is required in accordance with CFR 1.33, 10.18. Please see CFR 1.4(d) for the form of the signature.

Signature	/Eric S. Chen/	Date (YYYY-MM-DD)	2010-03-05
Name/Print	Eric S. Chen	Registration Number	43542

This collection of information is required by 37 CFR 1.97 and 1.98. The information is required to obtain or retain a benefit by the public which is to file (and by the USPTO to process) an application. Confidentiality is governed by 35 U.S.C. 122 and 37 CFR 1.14. This collection is estimated to take 1 hour to complete, including gathering, preparing and submitting the completed application form to the USPTO. Time will vary depending upon the individual case. Any comments on the amount of time you require to complete this form and/or suggestions for reducing this burden, should be sent to the Chief Information Officer, U.S. Patent and Trademark Office, U.S. Department of Commerce, P.O. Box 1450, Alexandria, VA 22313-1450. DO NOT SEND FEES OR COMPLETED FORMS TO THIS ADDRESS. **SEND TO: Commissioner for Patents, P.O. Box 1450, Alexandria, VA 22313-1450.**

Privacy Act Statement

The Privacy Act of 1974 (P.L. 93-579) requires that you be given certain information in connection with your submission of the attached form related to a patent application or patent. Accordingly, pursuant to the requirements of the Act, please be advised that: (1) the general authority for the collection of this information is 35 U.S.C. 2(b)(2); (2) furnishing of the information solicited is voluntary; and (3) the principal purpose for which the information is used by the U.S. Patent and Trademark Office is to process and/or examine your submission related to a patent application or patent. If you do not furnish the requested information, the U.S. Patent and Trademark Office may not be able to process and/or examine your submission, which may result in termination of proceedings or abandonment of the application or expiration of the patent.

The information provided by you in this form will be subject to the following routine uses:

1. The information on this form will be treated confidentially to the extent allowed under the Freedom of Information Act (5 U.S.C. 552) and the Privacy Act (5 U.S.C. 552a). Records from this system of records may be disclosed to the Department of Justice to determine whether the Freedom of Information Act requires disclosure of these record s.

2. A record from this system of records may be disclosed, as a routine use, in the course of presenting evidence to a court, magistrate, or administrative tribunal, including disclosures to opposing counsel in the course of settlement negotiations.

3. A record in this system of records may be disclosed, as a routine use, to a Member of Congress submitting a request involving an individual, to whom the record pertains, when the individual has requested assistance from the Member with respect to the subject matter of the record.

4. A record in this system of records may be disclosed, as a routine use, to a contractor of the Agency having need for the information in order to perform a contract. Recipients of information shall be required to comply with the requirements of the Privacy Act of 1974, as amended, pursuant to 5 U.S.C. 552a(m).

5. A record related to an International Application filed under the Patent Cooperation Treaty in this system of records may be disclosed, as a routine use, to the International Bureau of the World Intellectual Property Organization, pursuant to the Patent Cooperation Treaty.

6. A record in this system of records may be disclosed, as a routine use, to another federal agency for purposes of National Security review (35 U.S.C. 181) and for review pursuant to the Atomic Energy Act (42 U.S.C. 218(c)).

7. A record from this system of records may be disclosed, as a routine use, to the Administrator, General Services, or his/her designee, during an inspection of records conducted by GSA as part of that agency's responsibility to recommend improvements in records management practices and programs, under authority of 44 U.S.C. 2904 and 2906. Such disclosure shall be made in accordance with the GSA regulations governing inspection of records for this purpose, and any other relevant (i.e., GSA or Commerce) directive. Such disclosure shall not be used to make determinations about individuals.

8. A record from this system of records may be disclosed, as a routine use, to the public after either publication of the application pursuant to 35 U.S.C. 122(b) or issuance of a patent pursuant to 35 U.S.C. 151. Further, a record may be disclosed, subject to the limitations of 37 CFR 1.14, as a routine use, to the public if the record was filed in an application which became abandoned or in which the proceedings were terminated and which application is referenced by either a published application, an application open to public inspections or an issued patent.

9. A record from this system of records may be disclosed, as a routine use, to a Federal, State, or local law enforcement agency, if the USPTO becomes aware of a violation or potential violation of law or regulation.

(12) INTERNATIONAL APPLICATION PUBLISHED UNDER THE PATENT COOPERATION TREATY (PCT)

(19) World Intellectual Property Organization
International Bureau

(43) International Publication Date
11 December 2003 (11.12.2003)

PCT

(10) International Publication Number
WO 03/103301 A2

(51) International Patent Classification[7]: H04Q

(21) International Application Number: PCT/US03/16801

(22) International Filing Date: 29 May 2003 (29.05.2003)

(25) Filing Language: English

(26) Publication Language: English

(30) Priority Data:
10/161,245 31 May 2002 (31.05.2002) US

(71) Applicant: **F W MURPHY** [US/US]; 5311 South 122nd East Avenue, Tulsa, OK 74146 (US).

(72) Inventors: **HOLMES, John, K.**; 8242 South 72nd East Avenue, Tulsa, OK 74133 (US). **BRAGG, Steven, D.**; 9065 North 175th East Avenue, Owasso, OK 74055 (US).

(74) Agents: **MCCLELLAN, Gero, G.** et al.; Moser, Patterson & Sheridan, L.L.P., 3040 Post Oak Boulevard, Suite 1500, Houston, TX 77056 (US).

(81) Designated States *(national)*: BR, CA, CN, IN, JP.

(84) Designated States *(regional)*: European patent (AT, BE, BG, CH, CY, CZ, DE, DK, EE, ES, FI, FR, GB, GR, HU, IE, IT, LU, MC, NL, PT, SE, SI, SK, TR).

Published:
— *without international search report and to be republished upon receipt of that report*

For two-letter codes and other abbreviations, refer to the "Guidance Notes on Codes and Abbreviations" appearing at the beginning of each regular issue of the PCT Gazette.

(54) Title: TWO-WAY WIDE AREA TELEMETRY

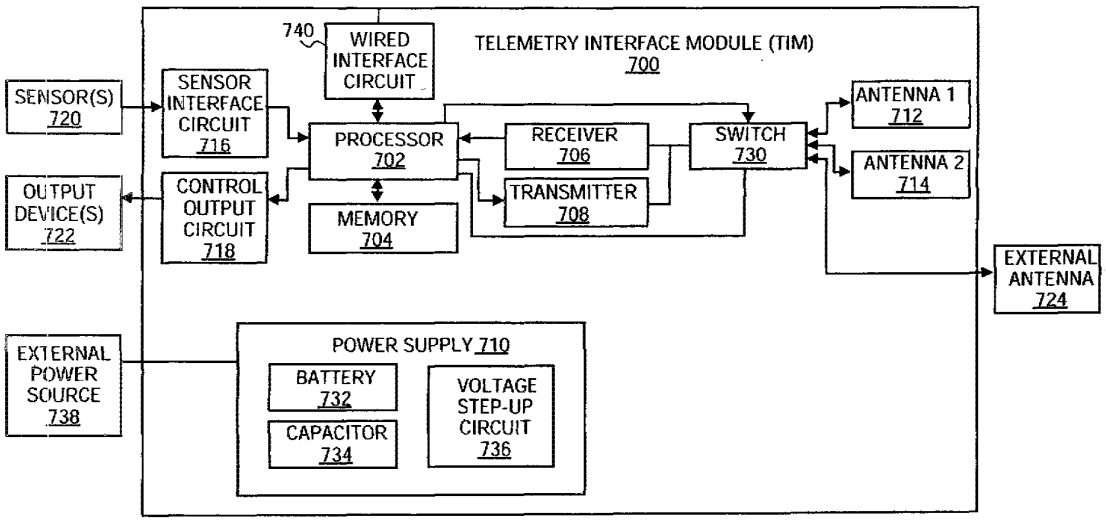

(57) Abstract: A method and apparatus for two-way telemetry is provided. For one embodiment, a telemetry interface module may receive data regarding the strength of transmitted signals. The telemetry interface module may transmit a query message to another telemetry interface module and receive a reply message containing received signal strength indicator (RSSI) data for the query message as received by the other telemetry interface module. For one embodiment, a telemetry interface module may adjust a transmission power level. For one embodiment, a telemetry interface module may select between a plurality of antennae for reception and transmission.

WO 03/103301 A2

TWO-WAY WIDE AREA TELEMETRY

FIELD OF THE INVENTION

[0001] The present invention is directed to the field of remote monitoring of equipment, specifically remote monitoring of equipment using telemetry.

BACKGROUND OF THE INVENTION

[0002] Telemetry devices have been successfully utilized in automated meter reading (AMR) applications. In such applications, a telemetry device typically transmits utility usage information to remote data collection modules which, in turn, transmit the information back, often over the Internet, to a central data collection facility. Telemetry devices are typically transmit-only devices in order to keep costs low and reduce power consumption.

[0003] The telemetry devices typically transmit data on a timed basis or on the occurrence of an event, such as a pulse received from the meter being read. An AMR system may utilize multiple data collection modules that may receive a transmission from the same telemetry device, in an effort to enhance reliability of data transmissions. An arbitration scheme may be utilized to determine which data collection module receiving data from the same telemetry device forwards the data to the central data collection facility. Further, data may be transmitted multiple times in an effort to ensure at least one of the transmissions is successfully received by a data collection module.

[0004] While transmit-only telemetry devices may be adequate for AMR applications, they suffer a number of disadvantages compared to two-way telemetry devices. First, transmit-only telemetry devices do not allow for two-way handshaking between the transmitting device and the receiving device. Two-way handshaking may increase reliability of data transmissions. Further, a transmit-only telemetry device may not be polled by another telemetry device. Finally, a transmit-only telemetry device may not receive useful information from another telemetry device, such as information regarding the strength of signals transmitted from the transmit-only telemetry device.

SUMMARY OF THE INVENTION

[0005] An embodiment of the present invention is a method for two-way telemetry. The method includes transmitting a query message from a first telemetry interface module to a second telemetry interface module, reading received signal strength

indicator (RSSI) data of the query message by the second telemetry interface module, and transmitting a reply message containing the RSSI data from the second telemetry interface module to the first telemetry interface module. In response to the received signal strength data contained in the reply message, the first telemetry interface module may adjust a transmission power and/or select an antenna from a plurality of antennae for future transmissions.

[0006] Another embodiment of the present invention is a two-way telemetry interface module. The two-way telemetry interface module may comprise a processor, memory, power supply, receiver, transmitter and one or more internal antennae. The module may comprise a connection for an external antenna. The one or more antennae may Embodiments of the two-way telemetry interface module may include a wireless end device, a data interface module for a controller, and a telemetry repeater module.

BRIEF DESCRIPTION OF THE FIGURES

[0007] FIG. 1 shows a block diagram of an exemplary wide area telemetry system.

[0008] FIG. 2 shows a block diagram of one embodiment of a sensor interface module.

[0009] FIG. 3 shows a sensor interface module to measure flow rate in a pipeline.

[0010] FIG. 4 shows a schematic of an exemplary sensor interface module.

[0011] FIG. 5 shows an exemplary two-way telemetry control system.

[0012] FIG. 6 shows an exemplary two-way telemetry control system with a telemetry repeater module (TRM).

[0013] FIG. 7 shows a block diagram of one embodiment of a telemetry interface module (TIM).

[0014] FIG. 8 shows a flow diagram of the operation of one embodiment of a telemetry interface module (TIM).

[0015] FIG. 9 shows a flow diagram of a routine to adjust transmission power according to one embodiment of the present invention.

[0016] FIG. 10 shows exemplary receive signal strength query and reply messages.

[0017] FIG. 11 shows a flow diagram of another routine to adjust transmission power according to one embodiment of the present invention.

[0018] FIG. 12 shows a pair of exemplary signal patterns transmitted from a pair of antennae.

[0019] FIG. 13 shows a flow diagram of a routine to select an antenna from a plurality of antennae according to one embodiment of the present invention.

[0020] FIG. 14 shows a flow diagram of another routine to select an antenna from a plurality of antennae according to one embodiment of the present invention.

DETAILED DESCRIPTION

[0021] The following detailed description sets forth an embodiment or embodiments in accordance with the present invention. In the following description, numerous details are set forth. It will be apparent, however, to one skilled in the art, that the present invention may be practiced without these specific details. In other instances, well-known structures and devices are shown in block diagram form, rather than in detail, in order to avoid obscuring the present invention.

AN EXEMPLARY WIDE AREA TELEMETRY SYSTEM

[0022] Referring to the drawings in detail, FIG. 1 is a schematic representation for a wide-area telemetry system 100, constructed in accordance with the present invention. A plurality of sensor interface modules 102, which are electromechanical interfaces, act as data gathering equipment.

[0023] Sensor interface modules 102 communicate with data collection modules 110 through a hardwire or wireless transmission 108. Standard wire connection may be utilized for the hardwire or wireless transmission 108, or various types of known, low-power, radio-frequency transmissions may be utilized. The preferred embodiment communicates by using a frequency-hopping spread-spectrum transmission in an unlicensed range, such as 902-928 Mhz.

[0024] The data collection modules 110 transmit the information received from the sensor interface modules 102 over a data module connection 116 to a network system 118. The network system 118 forwards the transmitted information over a network connection 120 to a host module 122 where the information is stored or processed. The stored or processed information may then be transmitted from the host module 122 through a host connection 124 to the customer interface 126.

[0025] The sensor interface modules 102 are intelligent communications devices which attach to gas, electric and water meters and other types of monitored equipment. The basic sensor interface modules 102 may be adapted to any number of systems to be monitored, including but not limited to: electrical systems, gas systems, water systems, security systems, temperature control systems, vending machines, and

remotely monitored devices of any sort. The sensor interface modules 102 include an appropriate hardware sensor for the device being monitored; a computerized monitoring system with associated firmware; battery power supply and/or a converter for external power; and a transmitter.

[0026] As shown in FIG. 2, the sensor interface module 102 can be made with a sensor interface main body 200, sensor connecting harness 202 and an external hardware sensor 204. The main body 200 consists of a sensor interface circuit board 206 with sensor connecting terminals 208 for attaching the sensor connecting harness 202 to the external hardware sensor 204. The main body 200 can be installed internally to the monitored device or can be made to fit in a small enclosure or casing 210 for external mounting on or in close proximity to the monitored device. The external hardware sensor 204 is mounted in a location suitable to the device being monitored and connected to the sensor interface circuit board 206 through the sensor connecting harness 202.

[0027] For gas meters, sensor interface module 102 will monitor rotation of the dials of the meter display. The small enclosure or casing 210 of the sensor interface module 102 may be mounted on the pipes or conduits surrounding the gas meter, or may be directly mounted on the meter. The sensor interface module 102 and the external hardware sensor may be integrated into the face plate of the meter to effectuate an efficient installation of the monitoring system on pre-existing meter installations.

[0028] A further alternative use of the sensor interface modules is illustrated in FIG. 3. One of the sensor interface modules 102 can be connected to external hardware sensor 204 (not shown) which includes multiple sensing units as a part of the external hardware sensor. An example of these types of sensors are shown as a flow sensor 300, pressure sensor 302, and temperature sensor 304 which gather information about the flow of gas or other liquids 306 through a pipeline 308. Information may be alternatively obtained from a flow computer which is connected to an orifice meter or a turbine meter. Flow computers and meters, such as turbine meters and orifice meters, are well known. Flow computers may be connected to sensor interface modules to allow the data from the flow computer to be delivered to a data collection module. Alternatively, if the flow computer has the appropriate capabilities, the flow computer can be programmed to directly communicate with the data collection module and, thus, bypass the sensor interface module.

[0029] Another alternate use for the sensor interface modules (not shown) would be for the monitoring of digital electric meters, external corrosion control monitoring systems, automated tank level control systems, and other types of systems. Additionally, devices which have output capabilities may be capable of being directly connected to the sensor interface modules, where the device itself becomes the external hardware sensor. Another possibility is that the device may have communication capabilities that allow for a direct connection to the data collection module without requiring the use of a sensor interface module.

[0030] Each of the sensor interface modules 102 include an external hardware sensor 204 which is capable of monitoring the desired device. Note that the word "external", as used in describing the external hardware sensor, means external to the standard design of the sensor interface module's data acquisition and transmission capabilities. This is due to the fact that the external hardware sensors will be different for individual applications. Thus, external means external only to the common circuitry for data gathering and transmission, and not necessarily physically external to the enclosure containing the sensor interface module 102.

[0031] FIG. 4 is a block diagram of a sensor interface module 102 which consists of a sensor interface main body 200 (shown by dashed lines) with an internal circuit board, and a connection 400 to an external hardware sensor 204 to receive input data, as described above.

[0032] The sensor interface module 102 includes a programmable processor micro-controller 402 with associated code which allows for flexibility in setting user definable parameters and to accommodate upgrades to the product. The basic program function of the programmable processor micro-controller 402 will be explained later. The micro-controller 402 is connected to a clock 404, which may operate in the 4 Mhz range, which provides a reference clock to a synthesizer 406. The micro-controller 402 also has a path to provide programming data to the synthesizer 406. The synthesizer 406 provides voltage to a voltage controller oscillator (VCO) 408. The VCO 408 also receives modulation data from the micro-controller 402. In the preferred embodiment, the VCO is designed to operate in the range of 902 to 928 Mhz. Output from the VCO 408 passes through a VCO filter 410 and feeds a power amplifier 412 which is passed through an amplifier filter 44. In the preferred embodiment, VCO filter 410 and amplifier filter 44 are designed to operate with an Fc of 950 Mhz. The output of amplifier filter

414 goes to an antenna 416 which operates in the range of 902 to 928 Mhz in the preferred embodiment.

[0033] The unit may be powered by a long life lithium battery (not shown), for a multiple year design life and/or powered from an external source. The battery power supply allows for the connection of sensor interface modules as monitoring devices which will be unaffected by long term power disruptions, power surges, or other system variations. This long life battery also allows the system to monitor areas or items which do not have power systems readily available.

[0034] Referring back to FIG. 1, the sensor interface module 102 receives information from external hardware sensors attached to the device or devices being monitored. This information is interpreted by the module's processing system which processes the information and then transmits the processed information to a data collection module.

[0035] For gas meter reading applications, the system detects pulses from the external hardware sensor, refines the sensor external hardware sensor signal to eliminate any erroneous signals, accumulates the signal pulses from the external hardware sensor, interprets the information according to its internal programming, the processed information is stored into memory for future updates, and the information is transmitted to the data collection module.

[0036] The external hardware sensor signals are recorded as a cumulative value for metering systems. This cumulative value is transmitted to the data collection modules. A cumulative count ensures that any gaps in information transmission will only have a temporary effect on the overall system's information flow. If a transmission is missed, then the cumulative information from before the missed transmission and a later received transmission will allow the host module to "recover" the missed transmission information by interpolation.

[0037] The sensor interface module is programmed to set the unique identifier for the device and the frequency that it transmits to the data collection module.

[0038] The sensor interface module 102 may be programmed by a programming computer (not shown) having a program implemented on a hand held processing or personal computer type of device. At the time of programming the sensor interface module, the programming information is either immediately transferred to the host module for permanent storage, or is maintained in the programming device for a future upload to the host module. The sensor interface module has a programmable 32 bit

address with the ability to maintain a maximum pulse count of 65535 from an external input.

[0039] In a preferred embodiment, the sensor interface module is designed to transmit via a spread spectrum radio operating on a 30 kHz bandwidth. The radio uses a hopping algorithm and has a maximum transmission time of approximately 50 msec on any one frequency channel. The transmission capabilities are approximately 3 miles in a line of sight transmission. However, the useable transmission distance among buildings, trees, and other disruptions is closer to 2000 feet. In the preferred embodiment, the sensor interface module is located at a maximum distance of 600 feet to 2000 feet from a data collection module.

[0040] The data collection module boxes are weatherproof enclosures that house data collection electronics. RF input signals in the range of 902 Mhz to 928 Mhz are received through the horizontally polarized antenna and routed to the receiver module. The receiver module hops the 25 pre-set frequencies looking for a RF signal modulated with a particular format. Once a valid signal is identified, the receiver stops hopping and decodes the entire data packet which passes along to CPU module for collection and evaluation.

[0041] Returning to a consideration of FIG. 1, the data collection module 110 provides the information transmission connection between the sensor interface module 102 and the network connection 116 to the host module 122. The data collection module 110 is a local, intelligent data concentrator residing at or near the location of the sensor interface modules 102. The data collection module 110 acts as the focal point of all the information which is collected from the sensor interface modules 102 within a monitored area, such as a customer's premise, and transmits this information to the host module 122 over standard communication systems 118.

[0042] In general, the data collection module works by following a simple routine. While in receive mode, the 900 Mhz Transceiver will continuously scan the frequency band of 902 and 928 Mhz searching for a RF signal. If a RF signal is detected, the transceiver will lock on to this signal, demodulate it, Manchester decode the data, and send this data to an RS-232 port. If a RF signal is not detected, this unit will collect data packets via an RS-232 port, Manchester encode the data, and transmit this data on 1 of 50 different frequency channels ranging from 902 to 928 Mhz. This transmission will use FSK (Frequency Shift Keying) modulation and will transmit for approximately 180 msec. After a packet of data has been transmitted, the transmitter

will return to receive mode and start scanning again for an RF signal. The unit will also start collecting another transmit data packet. The above process will then be repeated (at a different frequency) once a complete data packet has been collected. All 50 transmit frequency channels will be used before any given frequency is repeated.

TWO-WAY TELEMETRY

[0043] As the name implies, a two-way telemetry interface module (TIM) may send and receive messages. A two-way TIM may receive command messages requesting data, for example, allowing a Sensor Interface Module (SIM) to transmit data on a polled basis. A two-way TIM may also receive command messages, for example, to update a control output signal. A two-way TIM that generates a control output signal may be referred to as a telemetry output module (TOM). A two-way TIM that receives one or more sensor signals as inputs and generates one or more control outputs may be referred to as a telemetry control module (TCM). For one embodiment, a two-way TIM may serve as a data interface module (DIM) gathering data from, or communicating to a plurality of two-way TIMs of various types. A DIM may perform similar functions to the data collection module (DCM) previously described.

[0044] Figure 5 illustrates an exemplary two-way telemetry system 500. As illustrated, system 500 may comprise a plurality of two-way telemetry interface modules (TIMs), such as SIMs 502, TOMs 504, and TCMs 506, each coupled with a data interface module (DIM) 508 through a wireless connection. SIMs 502 may monitor input signals from one or more sensors 520. Sensors 520 may include digital (on/off) switches and/or analog sensors, such as 4-20 milli-ampere switches and voltage sensors. Telemetry output modules (TOMs) 504 may be coupled with one or more output devices 522. Examples of output devices include control valves, solenoids, and pumps. Types of control valves may include fuel valves, shut-off valves, suction valves, and discharge valves. Types of pumps may include electrically submersible pumps and irrigation pumps. TCMs 506 may be coupled with one or more sensors 524 and one or more output devices 526. Sensor 524 and output devices 526 may be any combination of the types of sensors and output devices previously described.

[0045] For one embodiment, a controller 510 may communicate with DIM 508 through a local control bus 512. DIM 508 and a controller 510 may be part of a control panel 514, which may be located at an industrial site. The local control bus may be

compatible with a standard industrial protocol, such as Schneider Electric's Modbus ® protocol or the Society of Automotive Engineers' (SAE) J1939 protocol. Therefore, a controller with a compatible bus interface may communicate with a plurality of TIMs through a DIM. For example, data from sensors connected with SIMs may be gathered by a DIM, and the data may be mapped to registers that can be read by the controller, while control outputs of TOMs may be mapped to registers that can be written to by the controller, allowing the controller to control an output device coupled with the TOM. Therefore, TIMs may provide a wireless interface to sensors and output devices, allowing greater flexibility in placement of the control panel.

[0046] For one embodiment, TIMs may also have a wired connection, such as wired connection 730, in addition to a wireless connection with a DIM. A wired connection provide for redundancy which may allow greater security of communications between TIMs. For example, if a wireless connection between a TIM and a DIM is lost, the wired connection may allow the TIM to continue communications with the DIM. Alternatively, if the wired connection is lost, the wireless connection may allow the TIM to continue communications with the DIM. Redundancy may be especially desirable for critical monitored parameters. To reduce wiring, the wired connection may be a bused connection, such as previously described Modbus ®, J1939, or any suitable bused connection.

[0047] As illustrated in Figure 6, for one embodiment, a two-way TIM may function as a telemetry repeater module (TRM) 602, effectively extending the allowable distance between TIMs. A TRM may, for example, receive a command message from a DIM and re-transmit the command message to a TIM. Similarly, the TRM may receive a reply message from the TIM and re-transmit the reply message to the DIM. A TRM may allow a group of TIMs to be placed a greater distance from a control panel than is normally allowed, which may facilitate placement of the control panel.

TWO-WAY TELEMETRY INTERFACE MODULE (TIM)

[0048] Figure 7 illustrates a block diagram of one embodiment of a two-way TIM 700. As illustrated, the basic components of a TIM may comprise a processor 702, memory 704, receiver 706, transmitter 708, and a power supply 710. The processor may be any suitable processor. For one embodiment, the processor and memory may be integrated in a microcontroller device. Examples of microcontroller devices include the PICmicro® series of microcontrollers from Microchip Technology Incorporated and the AT series of microcontrollers from Atmel Corporation. The memory may have

stored therein a set of instructions to implement two-way telemetry according to the present invention.

[0049] The transmitter and receiver may each comprise suitable circuitry. For one embodiment, the transmitter and receiver operate in a frequency range from 902 Mhz to 928 Mhz. The transmitter and receiver may be integrated on a common integrated circuit device. A receiver may output a received signal strength indicator (RSSI) signal which may be read by the processor. For one embodiment, a transmission power level of the transmitter may be adjustable, for example, by the controller. For example, the transmission power level may be kept at a minimum allowable level, which may lower power consumption and extend battery life.

[0050] As illustrated, a TIM may comprise one or more internal antennae, such as antennae 712 and 714, as well as a connection for an external antenna 724. For one embodiment, the antennae may operate in a frequency range from 902 Mhz to 928 Mhz. The antennae may be coupled with a switch 730. The processor may control the switch to select one of the antennae for transmission and reception, for example, in an effort to optimize signal strength for transmissions to a receiving TIM, such as a DIM. More than two internal antennae may be provided. For one embodiment, internal antennae are embedded into a PC board. Embedding the antennae into the PC board may provide cost savings over an external antenna. For another embodiment, internal antennae may be mounted on the PC board.

[0051] As previously, described, the TIM may communicate to a DIM through a wired connection. Therefore, the TIM may also have a wired interface circuit 730. The wired interface circuit may comprise any suitable interface circuitry to accommodate a suitable wired connection with another TIM. For one embodiment, the wired connections of more then one TIM may be bused together to facilitate wiring.

[0052] As illustrated, power supply 710 may comprise a battery 732, a capacitor 734, and a step-up voltage circuit 736. The battery may be any suitable battery, such as a long life lithium battery. For one embodiment, the capacitor may be charged to provide power for transmissions, rather than the battery, protecting the battery from high current demands which may extend the life of the battery. The capacitor may be any suitable capacitor, such as a SuperCapacitor available from Tokin Corporation. For one embodiment, the step-up voltage circuit may monitor the voltage level of the battery, and step-up the voltage by converting the voltage to a higher voltage, allowing the TIM to operate for a limited time at a lower battery voltage than is normally required.

As illustrated, for one embodiment, the power supply may accept power from an external power source 738. Therefore, the power supply may comprise suitable circuitry to switch between the external power source and the battery to prevent current draw from the battery when the external power source is connected.

[0053] A TIM may comprise additional circuitry depending on desired functionality. For example, a sensor interface module (SIM) may comprise a sensor interface circuit 716 to receive signals from one or more sensors 720. A telemetry output module (TOM) may comprise a control output circuit 718 to couple with one or more output devices 722. A telemetry control module (TCM) may comprise both a sensor interface circuit and a control output circuit to receive one or more sensor signals and couple with one or more output devices.

[0054] The operation of one embodiment of a two-way TIM is illustrated in flow diagram 800 of Figure 8. In step 802, the TIM is powered-up, for example, by applying external power to the TIM, or installing a battery. For step 804, the receiver and transmitter are powered up. For step 806, an antenna is selected for reception and transmission. For step 808, a transmission power level for the transmitter is adjusted. Methods for selecting an antenna and adjusting the transmission power level will be described in greater detail below. For step 810, the receiver and transmitter are powered down. For one embodiment, powering down the receiver and transmitter may comprise placing the receiver and transmitter in a low power state which may be exited upon detection of a predetermined message.

[0055] For step 812, the TIM is put to sleep. For one embodiment, putting the TIM to sleep may comprise, for example, placing a processor in a low power state. The TIM may wake up from sleep by exiting the low power state of the processor in response to a variety of different events. For example, prior to placing the processor in a low-power state, a number of interrupts may be enabled to cause the processor to exit the low-power state upon the occurrence of any of the interrupt conditions. For example, the processor may generate an interrupt if a monitored sensor changes state or if a message is detected by the receiver.

[0056] An interrupt may also be generated upon the expiration of a timer, which may be internal or external to the processor. For one embodiment, such a timer may be used as a heartbeat timer to periodically wake-up the processor in order to transmit a reassuring heartbeat message to a receiving device, for example, a DIM. For one embodiment, the heartbeat message may contain battery voltage data.

[0057] For step 814, the TIM wakes up from sleep. For step 816, the TIM checks to see if a command message is received. If a command message is received, the command message is processed for step 818 and a reply message is generated for step 820. For example, if the command message is a request to read data from a sensor monitored by a SIM, the SIM may read the sensor signal and generate a reply message containing sensor data. Alternatively, if the command message is a write command to a TOM, the TOM may update a control output and generate a reply message to acknowledge the command. The reply message may also include an indication that the command was successfully processed.

[0058] For step 822, the receiver and transmitter are powered up, and for step 824, the reply message is transmitted. After the reply message is transmitted, in an effort to conserve battery power, the receiver and transmitter may be powered down again, for block 810, and the TIM may be put back to sleep for block 812. For one embodiment, the TIM may remain awake for a predetermined amount of time prior to going back to sleep.

[0059] If a command message is not received for block 816, the TIM may have been awakened by the expiration of the heartbeat timer. Therefore, for step 826, the heartbeat timer is reset. For step 828 the battery voltage is read, and for step 830, the TIM generates a heartbeat reply message containing the battery voltage data. For step 822 the receiver and transmitter are powered up and the reply message is transmitted for step 824, as previously described.

TRANSMISSION POWER ADJUSTMENT

[0060] For one embodiment, transmission power level of a two-way TIM may be adjusted. Adjusting the transmission power level may offer a number of advantages. For example, the transmission power level may be limited to reduce power consumption for transmissions in an effort to extend battery life. For one embodiment, a higher transmission power level may be used when a TIM is connected with an external power source than when the TIM is powered from a battery only. As another example, FCC licenses may be obtained for different products specifying different maximum transmission power levels. By adjusting the transmission power level of the transmitter, the same transmitter circuitry may be used in both products without the cost of redesigning the transmitter circuitry.

[0061] Figure 9 illustrates, for one embodiment, a routine 900 to adjust a transmission power level of a TIM. The method requires at least two TIMs. For step

902, the transmission power level of a first TIM is set to a first power level. For example, the first power level may be a minimum power level. For one embodiment, a transmission power level may be adjusted through a digital interface provided in the transmitter. For another embodiment, the transmission power level may be adjusted by adjusting a voltage supplied to the transmitter.

[0062] For step 904, a query message is transmitted from the first TIM to a second TIM. The query message may be any command that prompts the second TIM to respond with a reply message. For step 906, the first TIM waits for a reply message from the second TIM. For one embodiment, the first TIM may wait a predetermined amount of time for the reply message before a timeout occurs.

[0063] If a reply message is not received, for step 908, the transmission power level may not have been strong enough for the transmitted query message to reach the second TIM. Therefore, the transmission power level of the first TIM is incremented for step 910, the first TIM again transmits a query message for step 904, and waits for a reply message for step 906.

[0064] If the first TIM receives a reply message from the second TIM, for step 908, the transmission power level for the transmitted query message was sufficient to reach the second TIM. Therefore, for step 912, the transmission power level is maintained for future transmissions, and the routine is exited for step 914. For one embodiment, to provide a safety margin, the transmission power level may be incremented further after a reply message is received. According to the method described above, a transmission power level may initially be set to a minimum level. Alternatively, the transmission power level may be initially set to a higher level, decremented until a reply message is not received from the second TIM, then adjusted back to a higher level.

RECEIVE SIGNAL STRENGTH INDICATOR (RSSI)

[0065] As previously described, a receiver may provide a received signal strength indicator (RSSI) signal, or a similar signal to indicate the strength of a received signal. For one embodiment, a receiver may provide a digital value of an RSSI signal. An RSSI signal may be utilized to perform various functions, such as transmission power level adjustment and antenna selection. To facilitate description of the invention, any similar signal indicative of the strength of a received signal will also be referred to as an RSSI signal.

[0066] According to one embodiment, a two-way TIM may measure an RSSI signal for a message, as received by another two-way TIM. For example, a first TIM may

transmit a query message to a second TIM requesting RSSI data for the query message, as received by the second TIM. The second TIM receiving the query message may read RSSI data for the query message, as received, generate a reply message containing the RSSI data, and transmit the reply message containing the RSSI data to the first TIM. Therefore, the first TIM may receive data regarding the strength of its transmitted signals, as received by other TIMs.

[0067] Figure 10 illustrates an exemplary RSSI query message 1002 and an exemplary RSSI reply message 1004 which may each have fields 1006 through 1016. Fields 1006 and 1008 may contain synchronization data, for example, to allow a receiving TIM to synchronize with the transmission. Field 1010 may contain a device identification (ID) which may be, for example, a 32-bit number that uniquely identifies a TIM. Field 1012 may contain a command code, for example, identifying the message as an RSSI query. Field 1016 may contain an error correction code, for example, a cyclic redundancy check (CRC) value calculated for the remainder of the message. Reply message 1004 may also have an additional field 1014 that contains the RSSI data for the query message as received.

[0068] Figure 11 illustrates a routine 1100 to adjust the transmission power level of a TIM that utilizes an RSSI query message. For step 1102, the transmission power level of a first TIM is set to a first power level. For step 1104, the first TIM transmits an RSSI query message to a second TIM. For step 1106, the first TIM waits to receive a reply message from the second TIM. As previously described, if no reply message is received, for block 1108, the transmission power level may have been insufficient for the query message to reach the second TIM. Therefore, the transmission power level may be incremented for step 1110 prior to sending another RSSI query message for step 1104.

[0069] If a reply message is received for step 1108, the transmission power level was at least sufficient for the query message to reach the second TIM. The reply message should contain RSSI data for the query message as received by the second TIM. For one embodiment, the first TIM compares the RSSI data to a threshold value for step 1112. The threshold value may be determined, for example, to ensure a minimum strength for signals received by the second TIM. If the RSSI data is less than the threshold level, the transmission power level may be marginal. Therefore, the transmission power level may be incremented for step 1110 prior to sending another RSSI query message for step 1104.

[0070] If the RSSI data exceeds the threshold level, the transmission power level may be adequate to ensure transmissions from the first TIM will reach the second TIM. Therefore, for step 1114, the transmission power level is maintained for future transmissions, and the routine is exited for step 1116. For one embodiment, a transmission power level adjustment routine may be performed periodically to account for changes in the telemetry environment, such as weather and the addition or removal of physical objects, that may affect transmissions and reception.

AUTOMATED ANTENNA SELECTION

[0071] As previously described, in an effort to maximize transmission and/or reception coverage area, a TIM may utilize more than one antenna. For another embodiment, an external antenna may be connected as well as one or more internal antennae. Figure 12 illustrates exemplary transmitted signal patterns 1202 and 1204 transmitted from two generally orthogonal antennae of TIM 1206. For one embodiment, generally orthogonal antennae may be embedded into a PC board of the TIM. As illustrated, using two generally orthogonal antennae may result in approximately double the coverage area. However, the signal patterns may be directional and, therefore, may be generally exclusive. For example, a receiving TIM located in the coverage area of signal pattern 1202 may receive signals generated from the first antenna, but may not receive signals transmitted from the second antenna. Therefore, it may be desirable to select between the antennae to create an optimal coverage area.

[0072] Figure 13 illustrates a routine 1300 to select between more than one antennae. For block 1302 the TIM selects a first antenna. As previously described, for one embodiment, a processor may control a switch to select from one or more antennae. For block 1304, the TIM listens for a message. For one embodiment, the TIM may send a query message (not shown) in an attempt to elicit a response. For another embodiment, the TIM may simply listen, for example, for command messages from a data interface module (DIM).

[0073] For block 1306, if the TIM does not receive (or "hear") a message, it selects a second antenna for block 1310. If the TIM does receive a message, it measures first RSSI data for the message for block 1308 before selecting a second antenna for block 1310. An RSSI data value may be set to zero at the first TIM if no reply message is received.

[0074] For block 1312, the TIM again listens for a message. For block 1314, if the TIM hears a message, it measures second RSSI data for the message for block 1316. For block 1318, the second RSSI is compared to the first RSSI. For block 1320, if the second RSSI is greater than the first RSSI, the routine is exited for block 1324, with the second antenna selected. If the second RSSI is less than the first RSSI, the first antenna is selected for block 1322 prior to exiting the routine for block 1324. For one embodiment, first and/or second RSSI data may be compared against a threshold value.

[0075] According to the routine illustrated in Figure 13, the antenna that receives the message with the highest RSSI (signal strength) is selected. In other words, the routine may be used to select an antenna that optimizes reception. For another embodiment, the RSSI of a TIM receiving a query message may be used to determine which antenna to select. In other words, the transmission signal strength from the antenna, as received by another TIM, may be the deciding factor.

[0076] Figure 14 illustrates a routine 1400 to select an antenna for a first TIM by transmitting RSSI query messages to a second TIM. For step 1402, a first antenna is selected for the first TIM. For step 1404, a first RSSI query message is transmitted from the first TIM to the second TIM. For step 1406, a first query message is received containing first RSSI data for the first query message, as received by the second TIM. An RSSI data value may be set to zero at the first TIM if no reply message is received.

[0077] For step 1408, a second antenna is selected for the first TIM. For step 1410, a second RSSI query message is transmitted from the first TIM to the second TIM. For step 1412, a second query message is received containing second RSSI data for the second query message, as received by the second TIM. For step 1414, the second RSSI data is compared to the first RSSI data. For step 1416, if the second RSSI data is greater than the first RSSI data, the routine is exited, for block 1420, with the second antenna selected. If the first RSSI data is greater than the second RSSI data, the first antenna is selected for block 1418 prior to exiting the routine.

[0078] Preferably, an antenna selection routine is performed after a TIM and a data interface module that will communicate with it are installed (i.e. their physical locations are determined). If the physical location of either a TIM or DIM is changed, an antenna selection routine should be performed again to select antenna for the new physical locations. Seasonal factors, such as the amount of leaves on a tree, may also affect antenna transmission and reception. Therefore, for one embodiment, an antenna

selection routine may be performed periodically to adapt to such changes. While the exemplary routines above describe only two antennae, it should be understood that similar routines may be performed for more than two antennae by repeating one or more of the steps described.

[0079] It should also be noted that for different embodiments, the routines described above may be combined in various manners. For example, a transmission power level may be adjusted prior to selecting an antenna. Alternatively, an antenna may be selected prior to adjusting the transmission level. Further, any or all of the routines may be run sequentially, and the results of several routines may be used to determine an antenna selection and/or a transmission power level.

[0080] In the foregoing description, the invention has been described with reference to specific exemplary embodiments thereof. It will, however, be evident that various modifications and changes may be made thereto without departing from the broader spirit or scope of the present invention as defined in the appended claims. The specification and drawings are, accordingly, to be regarded in an illustrative rather than a restrictive sense.

CLAIMS

What is claimed is:

1. A method for two-way telemetry comprising:

transmitting a first query message from a first telemetry interface module to a second telemetry interface module; and

receiving a first reply message by the first telemetry interface module containing first received signal strength indicator (RSSI) data for the first query message, as received by the second telemetry interface module.

2. The method of claim 1, comprising:

setting a transmission power level of the first telemetry interface module to a first power level prior to transmitting the first query message;

setting the transmission power level of the first telemetry interface module to a second power level; and

transmitting a second query message from the first telemetry interface module to the second telemetry interface module.

3. The method of claim 2, comprising:

receiving a second reply message by the first telemetry interface module containing second received signal strength indicator (RSSI) data for the second query message, as received by the second telemetry interface module; and

comparing the second received signal strength indicator (RSSI) data to the first received signal strength indicator (RSSI) data.

4. The method of claim 1, comprising selecting a first antenna, from a plurality of antennae at the first telemetry interface module, prior to transmitting the first query message.

5. The method of claim 4, comprising:

selecting a second antenna from the plurality of antennae after receiving the first reply message;

transmitting a second query message from the first telemetry interface module to the second telemetry interface module;

receiving a second reply message by the first telemetry interface module containing second received signal strength indicator (RSSI) data for the second query message, as received by the second telemetry interface module; and

comparing the second received signal strength indicator (RSSI) data to the first received signal strength indicator (RSSI) data.

6. A method for adjusting power in a telemetry interface module comprising:

transmitting a first query message at a first transmission power level to a second telemetry interface module;

listening for a reply message from the second telemetry interface module in response to the first query message;

transmitting a second query message at a second transmission power level to the second telemetry interface module; and

listening for a reply message from the second telemetry interface module in response to the second query message.

7. The method of claim 6, comprising:

receiving a reply message in response to the second query message but not the first query message; and

maintaining the second transmission power level or a higher transmission power level for future transmissions.

8. The method of claim 7, comprising selecting an antenna from a plurality of antennae at the first telemetry interface module.

9. A method comprising:

receiving a query message from a telemetry interface module;

measuring received signal strength indicator (RSSI) data for the query message, as received;

generating a reply message containing the measured received signal strength indicator (RSSI) data; and

transmitting the reply message to the telemetry interface module.

10. A telemetry interface module comprising:

a receiver;

a transmitter;

a processor coupled with the receiver and transmitter; and

a memory coupled with the processor, having stored therein a set of instructions to transmit a first query message to another telemetry interface module and receive a

first reply message containing first received signal strength indicator (RSSI) data for the first query message, as received by the other telemetry interface module.

11. The telemetry interface module of claim 10, wherein the set of instructions comprises instructions to set a transmission power level of the transmitter to a first power level prior to transmitting the first query message, set the transmission power level of the transmitter to a second power level, and transmit a second query message to the other telemetry interface module.

12. The telemetry interface module of claim 11, wherein the set of instructions comprises instructions to receive a second reply message containing second received signal strength indicator (RSSI) data for the second query message, as received by the other telemetry interface module, and compare the second received signal strength indicator (RSSI) data to the first received signal strength indicator (RSSI) data.

13. The telemetry interface module of claim 10, comprising a plurality of antennae.

14. The telemetry interface module of claim 13, wherein at least one of the plurality of antennae are embedded in a printed circuit (PC) board.

15. A telemetry interface module comprising:

a receiver;

a transmitter;

a processor coupled with the receiver and transmitter; and

a memory coupled with the processor, having stored therein a set of instructions to receive a query message from another telemetry interface module, measure received signal strength indicator (RSSI) data for the query message, as received, generate a reply message containing the measured received signal strength indicator (RSSI) data, and transmit the reply message to the other telemetry interface module.

16. A telemetry interface module comprising:

a receiver;

a transmitter;

a plurality of antennae coupled with the receiver antennae;

a processor coupled with the receiver and transmitter; and

a memory coupled with the processor, having stored therein a set of instructions to receive and transmit messages.

17. The telemetry interface module of claim 16, wherein at least one of the plurality of antennae are embedded in a printed circuit (PC) board.

18. The telemetry interface module of claim 16, comprising a switch coupled with the processor and the plurality of antenna.

19. The telemetry interface module of claim 16, wherein the set of instructions comprises instructions to select a first antenna from the plurality of antennae, transmit a first query message, and receive a first reply message.

20. The telemetry interface module of claim 19, wherein the set of instructions comprises instructions to select a second antenna from the plurality of antennae, and transmit a second query message.

21. The telemetry interface module of claim 19, wherein the set of instructions comprises instructions to receive a query message from another telemetry interface module, measure received signal strength indicator (RSSI) data for the query message, as received, generate a reply message containing the measured received signal strength indicator (RSSI) data, and transmit the reply message to the other telemetry interface module.

22. A telemetry interface module comprising:

a receiver;

a transmitter;

a wired interface circuit;

a processor coupled with the receiver, transmitter, and wired interface circuit; and

a memory coupled with the processor, having stored therein a set of instructions to receive messages with the receiver, transmit messages with the transmitter, and communicate to an external device through the wired interface.

23. A system comprising:

a plurality of telemetry interface modules, each comprising a receiver, a transmitter, a processor coupled with the receiver and transmitter, and a memory coupled with the processor, having stored therein a set of instructions to transmit a first query message to a data interface module and receive a first reply message containing

first received signal strength indicator (RSSI) data for the first query message, as received by the data interface module; and

a data interface module in communication with the plurality of telemetry interface modules, the data interface module comprising a receiver, a transmitter, a processor coupled with the receiver and transmitter, and a memory coupled with the processor, having stored therein a set of instructions to receive a query message from a telemetry interface module, measure received signal strength indicator (RSSI) data for the query message, as received, generate a reply message containing the measured received signal strength indicator (RSSI) data, and transmit the reply message to the telemetry interface module.

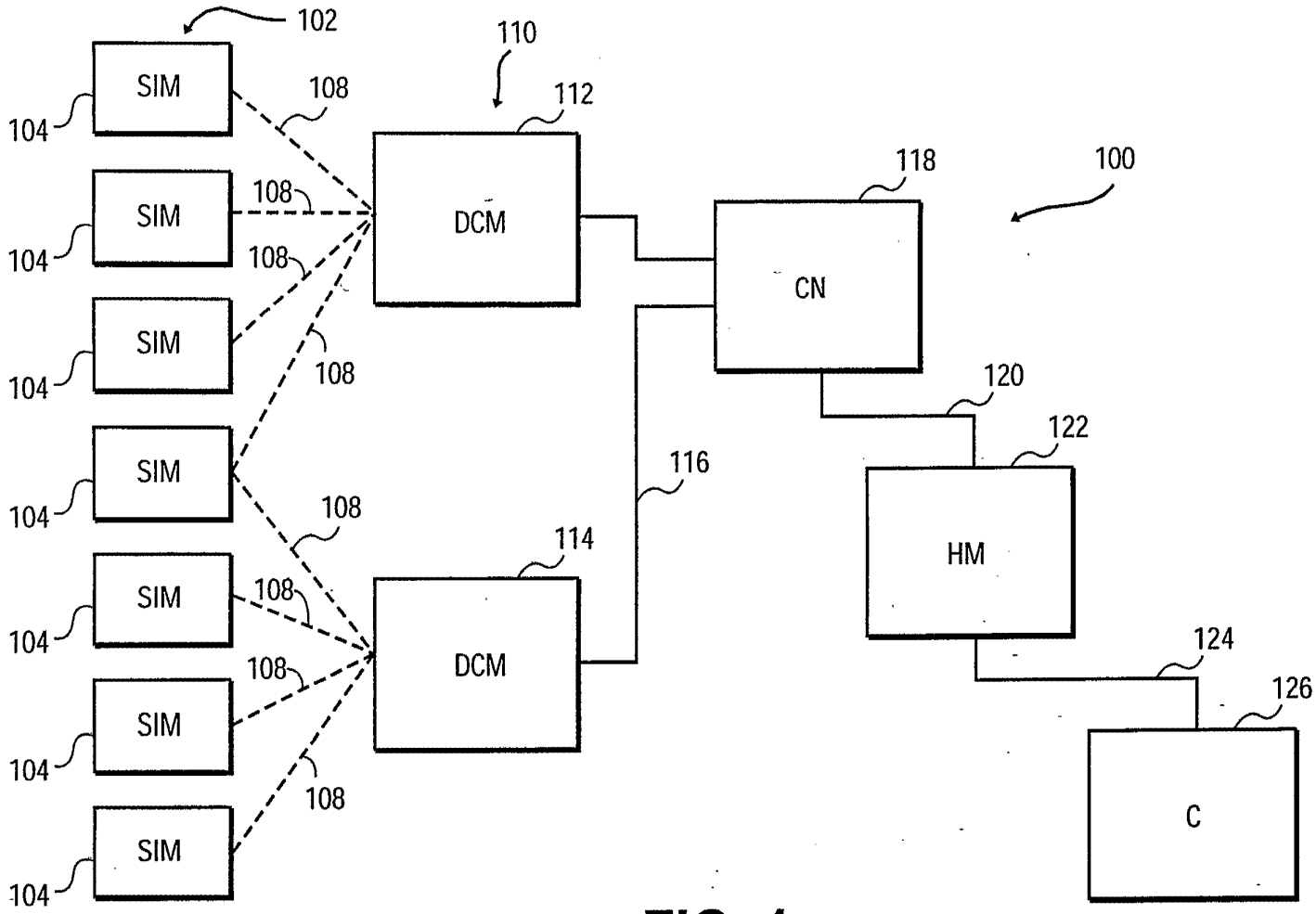
102
110
112
118
100
SIM
SIM
SIM
SIM
SIM
SIM
SIM
104
108
DCM
CN
120
122
116
114
HM
124
126
C

FIG. 1

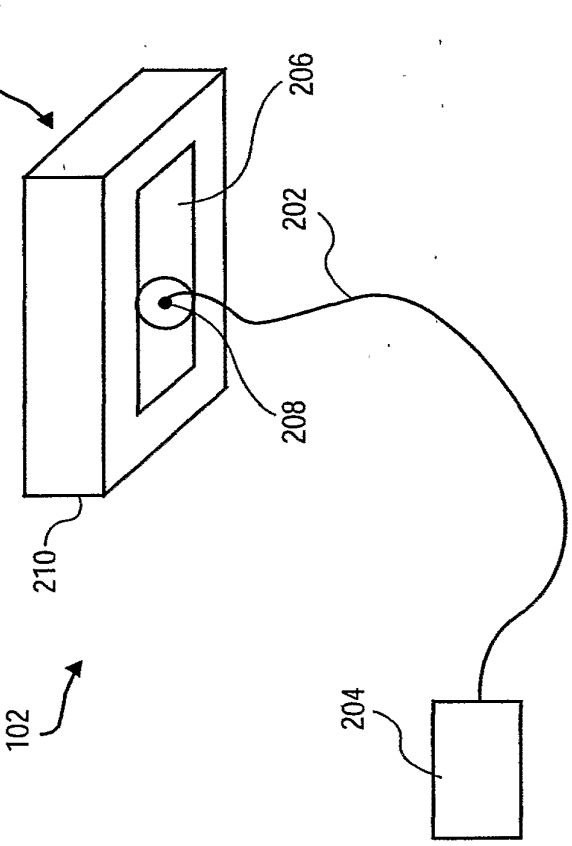

FIG. 2

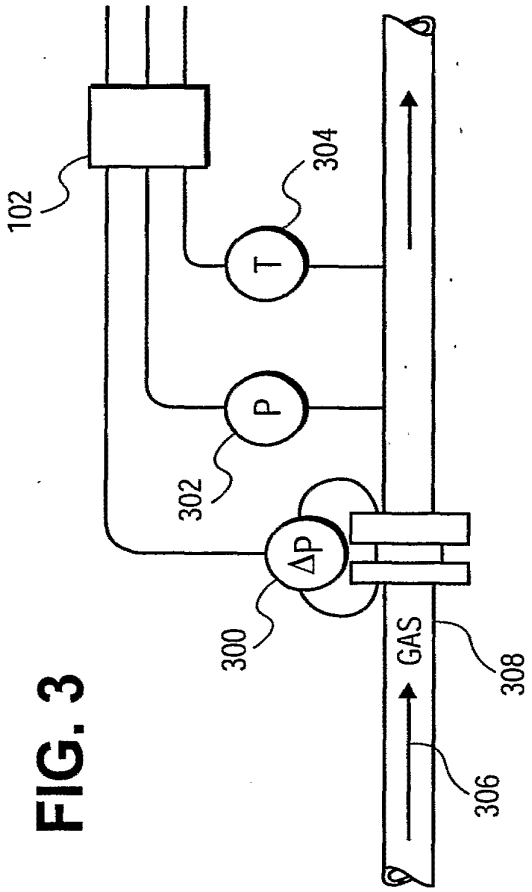

FIG. 3

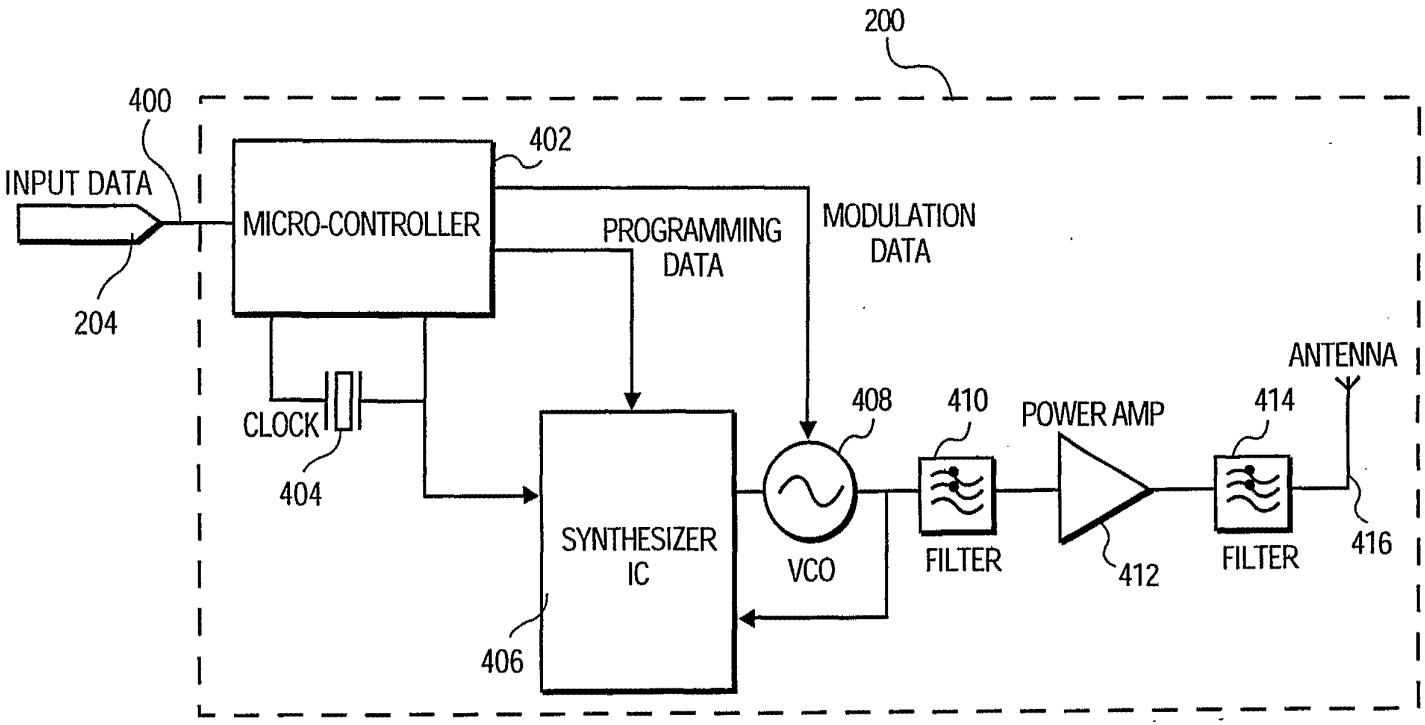
200
400
INPUT DATA
204
MICRO-CONTROLLER
402
PROGRAMMING DATA
MODULATION DATA
CLOCK
404
SYNTHESIZER IC
406
VCO
408
FILTER
410
POWER AMP
412
FILTER
414
ANTENNA
416

FIG. 4

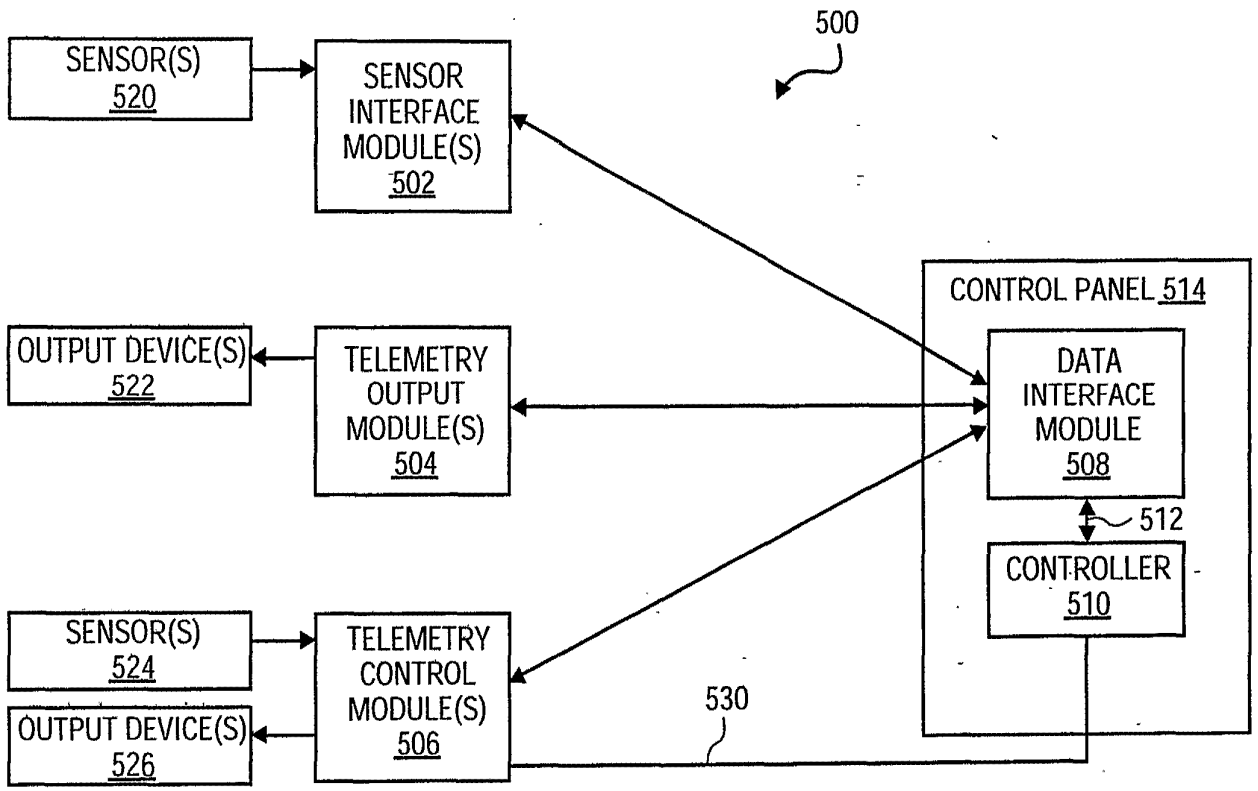
500
SENSOR(S) 520
SENSOR INTERFACE MODULE(S) 502
CONTROL PANEL 514
OUTPUT DEVICE(S) 522
TELEMETRY OUTPUT MODULE(S) 504
DATA INTERFACE MODULE 508
512
CONTROLLER 510
SENSOR(S) 524
TELEMETRY CONTROL MODULE(S) 506
530
OUTPUT DEVICE(S) 526

FIG. 5

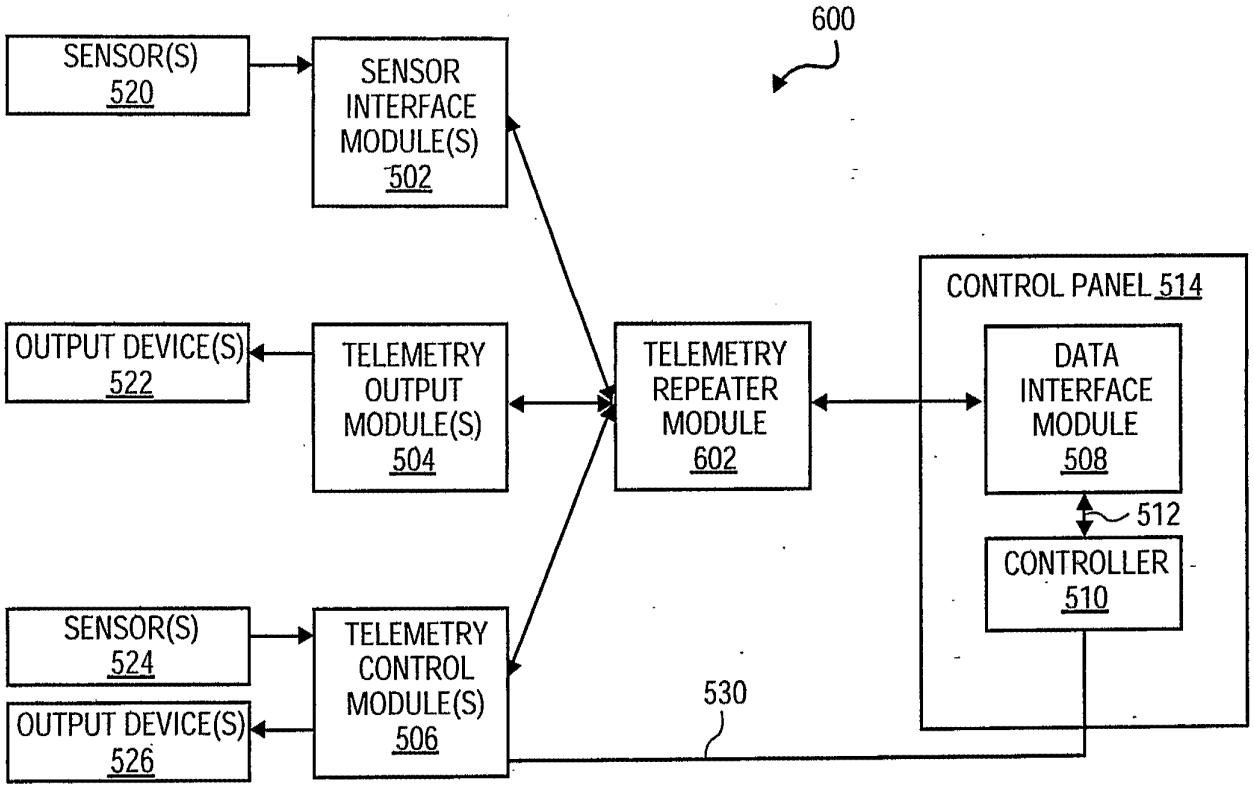
600
SENSOR(S) 520
SENSOR INTERFACE MODULE(S) 502
OUTPUT DEVICE(S) 522
TELEMETRY OUTPUT MODULE(S) 504
TELEMETRY REPEATER MODULE 602
CONTROL PANEL 514
DATA INTERFACE MODULE 508
512
CONTROLLER 510
SENSOR(S) 524
OUTPUT DEVICE(S) 526
TELEMETRY CONTROL MODULE(S) 506
530

FIG. 6

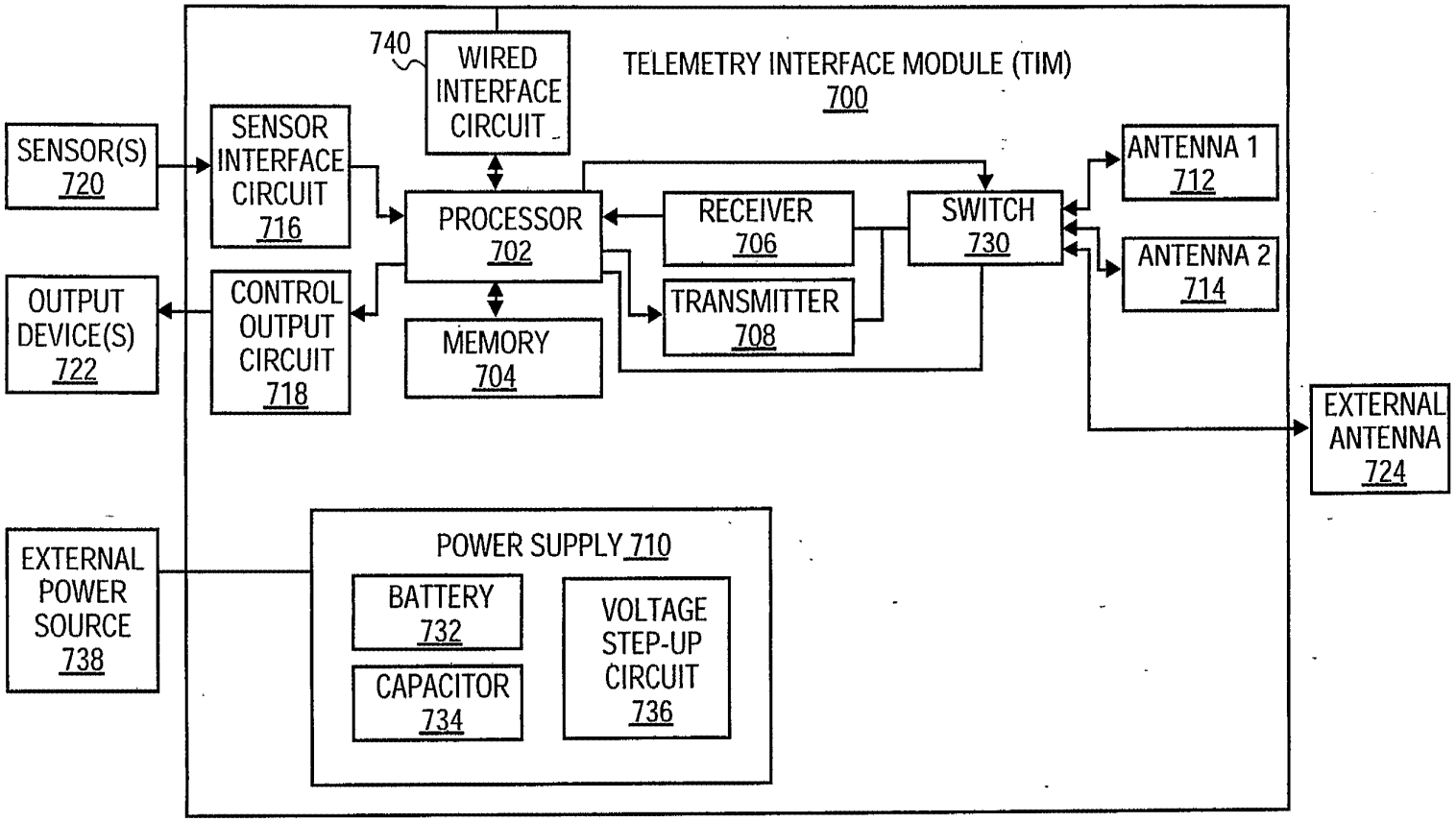
TELEMETRY INTERFACE MODULE (TIM)
700
740
WIRED INTERFACE CIRCUIT
SENSOR(S) 720
SENSOR INTERFACE CIRCUIT 716
PROCESSOR 702
RECEIVER 706
SWITCH 730
ANTENNA 1 712
ANTENNA 2 714
OUTPUT DEVICE(S) 722
CONTROL OUTPUT CIRCUIT 718
MEMORY 704
TRANSMITTER 708
EXTERNAL ANTENNA 724
EXTERNAL POWER SOURCE 738
POWER SUPPLY 710
BATTERY 732
CAPACITOR 734
VOLTAGE STEP-UP CIRCUIT 736

FIG. 7

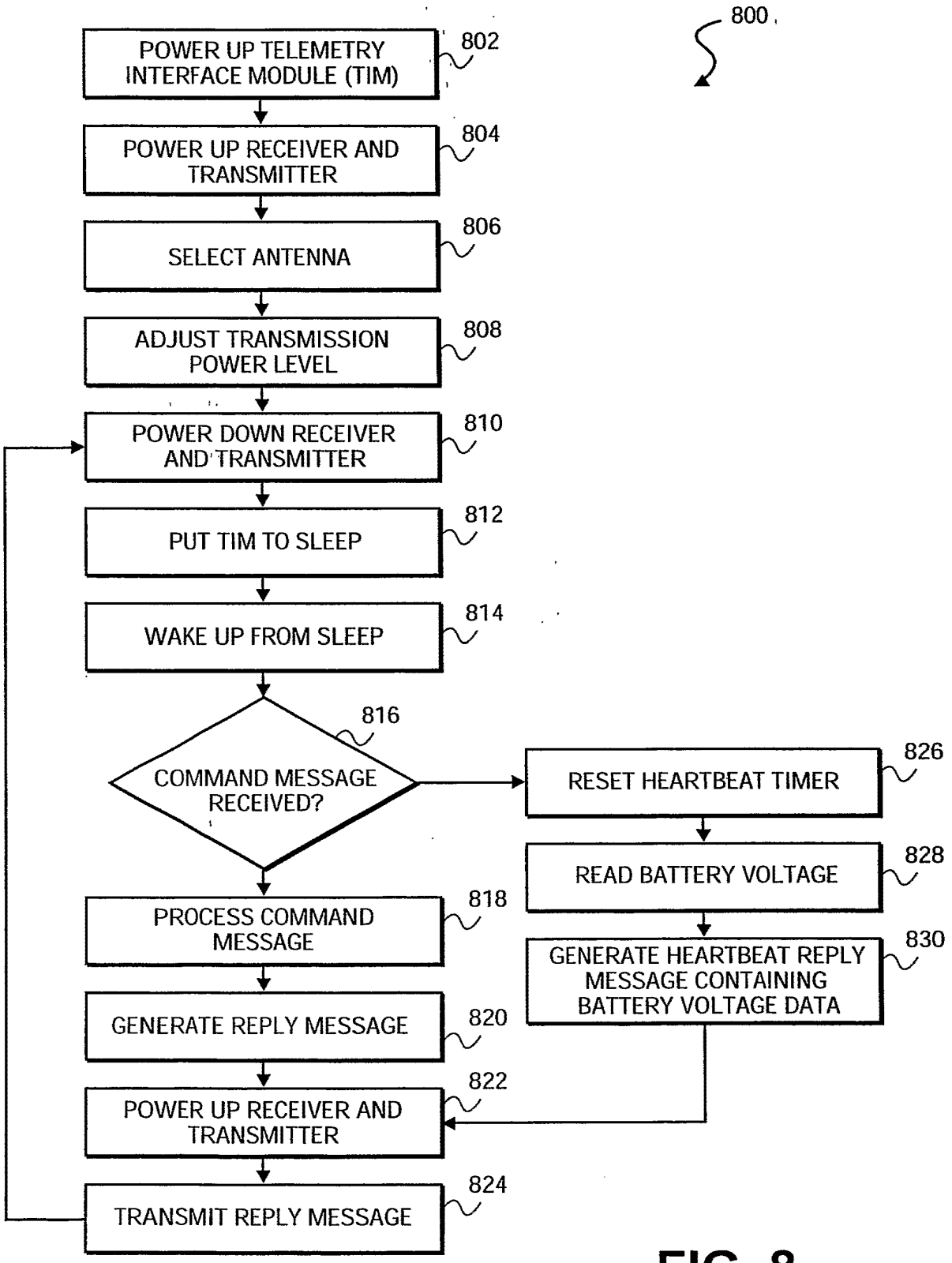
800
POWER UP TELEMETRY INTERFACE MODULE (TIM)
802
POWER UP RECEIVER AND TRANSMITTER
804
SELECT ANTENNA
806
ADJUST TRANSMISSION POWER LEVEL
808
POWER DOWN RECEIVER AND TRANSMITTER
810
PUT TIM TO SLEEP
812
WAKE UP FROM SLEEP
814
COMMAND MESSAGE RECEIVED?
816
RESET HEARTBEAT TIMER
826
READ BATTERY VOLTAGE
828
GENERATE HEARTBEAT REPLY MESSAGE CONTAINING BATTERY VOLTAGE DATA
830
PROCESS COMMAND MESSAGE
818
GENERATE REPLY MESSAGE
820
POWER UP RECEIVER AND TRANSMITTER
822
TRANSMIT REPLY MESSAGE
824

FIG. 8

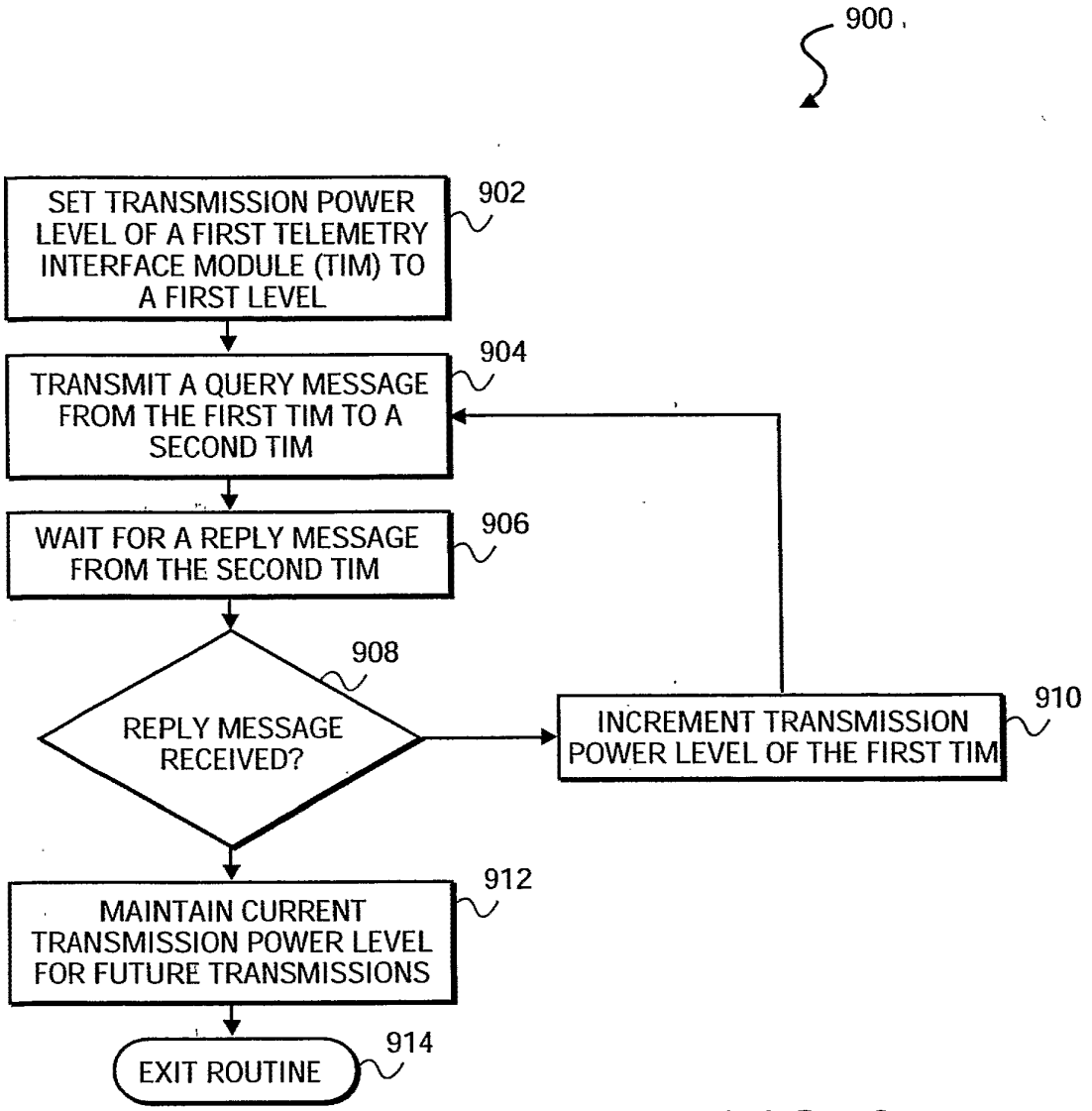
900
SET TRANSMISSION POWER LEVEL OF A FIRST TELEMETRY INTERFACE MODULE (TIM) TO A FIRST LEVEL
902
TRANSMIT A QUERY MESSAGE FROM THE FIRST TIM TO A SECOND TIM
904
WAIT FOR A REPLY MESSAGE FROM THE SECOND TIM
906
REPLY MESSAGE RECEIVED?
908
INCREMENT TRANSMISSION POWER LEVEL OF THE FIRST TIM
910
MAINTAIN CURRENT TRANSMISSION POWER LEVEL FOR FUTURE TRANSMISSIONS
912
EXIT ROUTINE
914

FIG. 9

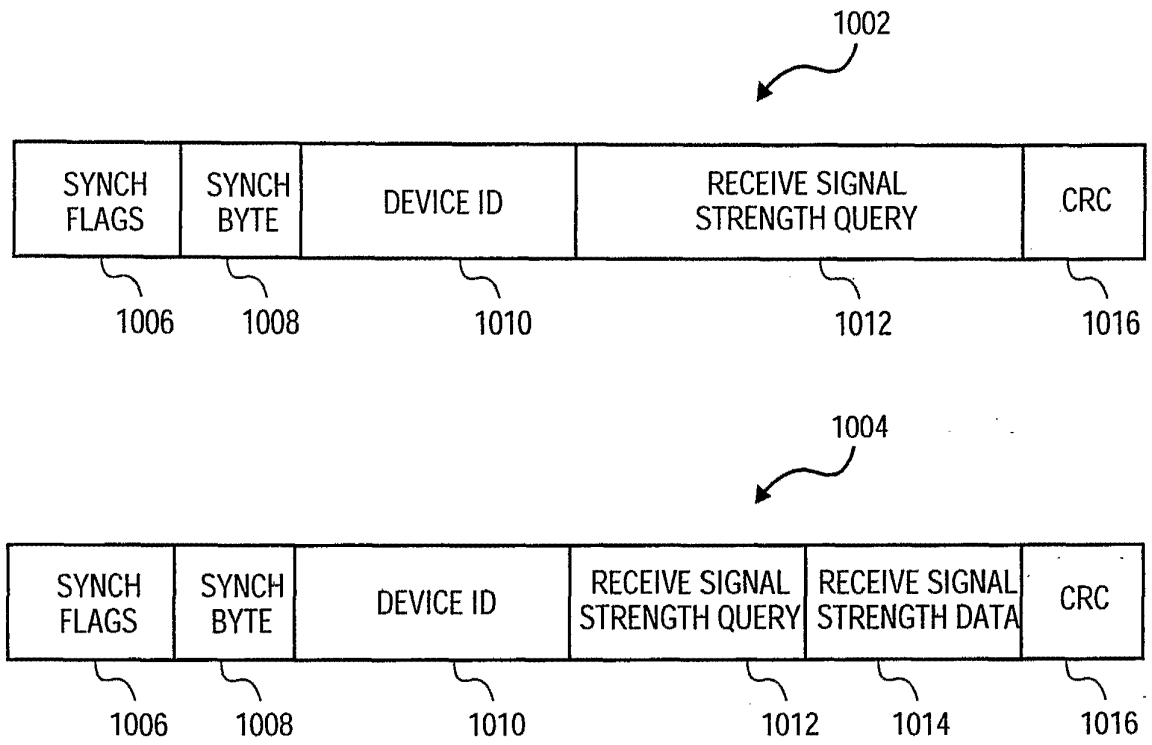
1002
SYNCH FLAGS
SYNCH BYTE
DEVICE ID
RECEIVE SIGNAL STRENGTH QUERY
CRC
1006
1008
1010
1012
1016
1004
SYNCH FLAGS
SYNCH BYTE
DEVICE ID
RECEIVE SIGNAL STRENGTH QUERY
RECEIVE SIGNAL STRENGTH DATA
CRC
1006
1008
1010
1012
1014
1016

FIG. 10

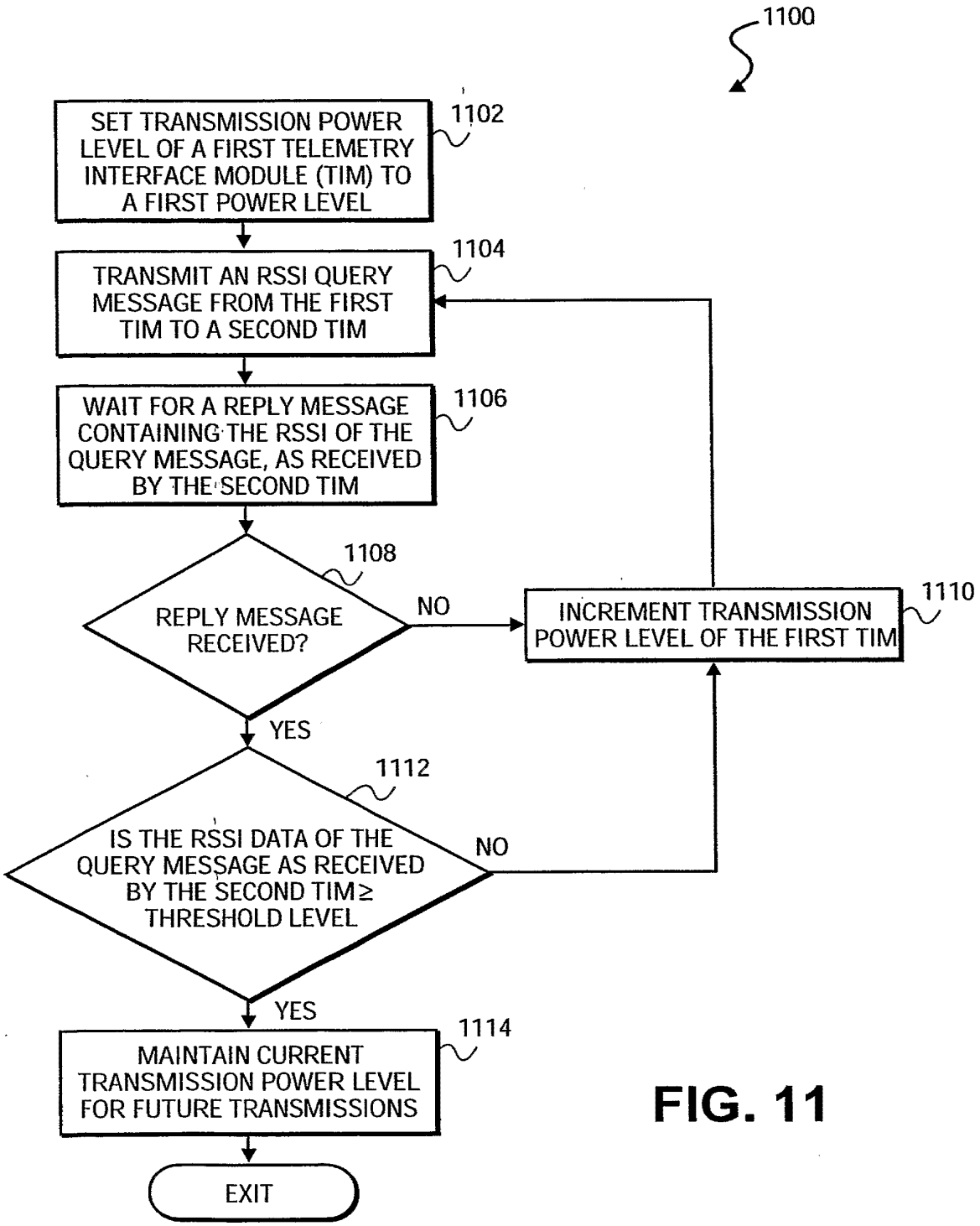
1100
SET TRANSMISSION POWER LEVEL OF A FIRST TELEMETRY INTERFACE MODULE (TIM) TO A FIRST POWER LEVEL
1102
TRANSMIT AN RSSI QUERY MESSAGE FROM THE FIRST TIM TO A SECOND TIM
1104
WAIT FOR A REPLY MESSAGE CONTAINING THE RSSI OF THE QUERY MESSAGE, AS RECEIVED BY THE SECOND TIM
1106
REPLY MESSAGE RECEIVED?
1108
NO
INCREMENT TRANSMISSION POWER LEVEL OF THE FIRST TIM
1110
YES
IS THE RSSI DATA OF THE QUERY MESSAGE AS RECEIVED BY THE SECOND TIM ≥ THRESHOLD LEVEL
1112
NO
YES
MAINTAIN CURRENT TRANSMISSION POWER LEVEL FOR FUTURE TRANSMISSIONS
1114
EXIT

FIG. 11

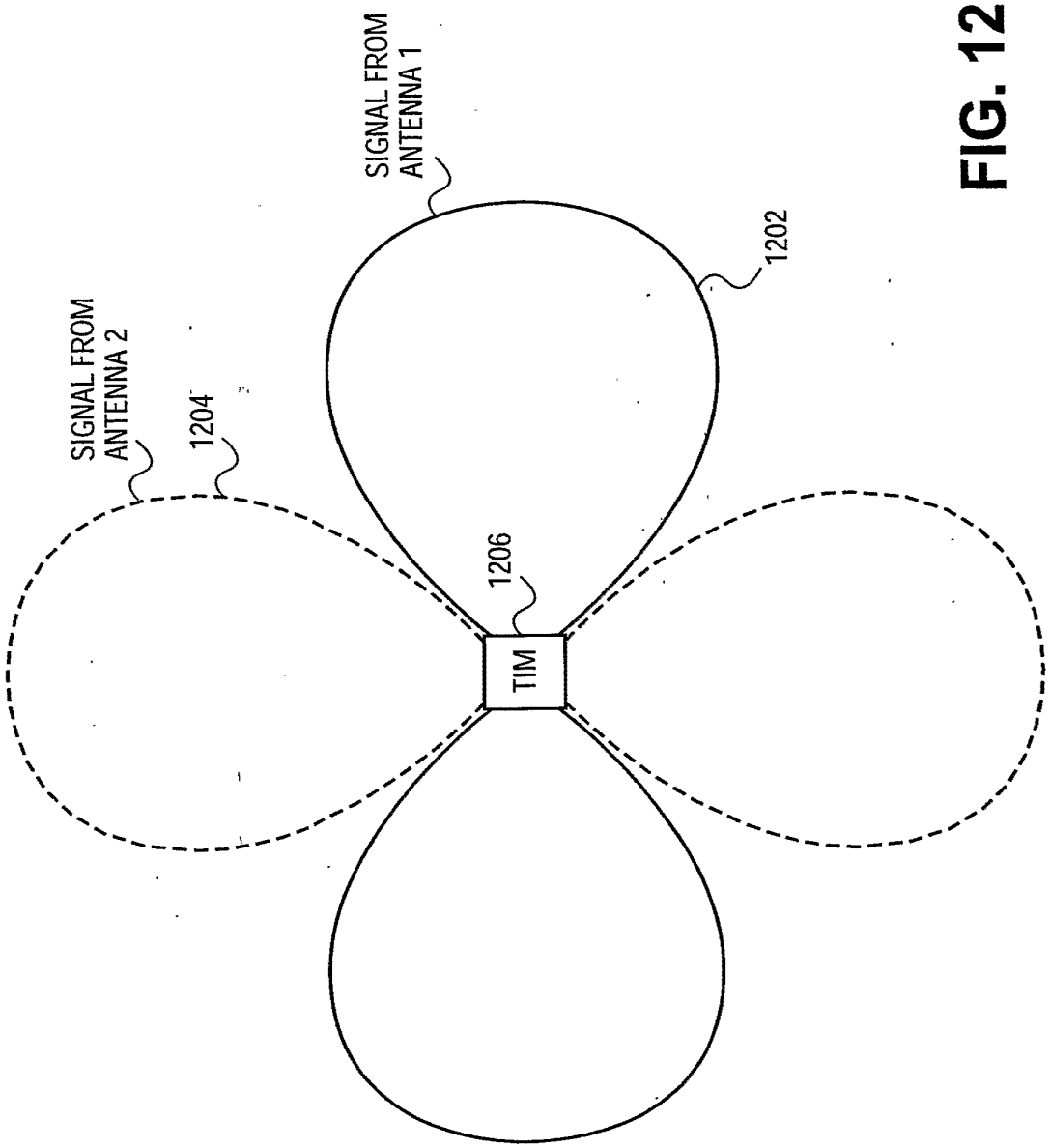
SIGNAL FROM ANTENNA 2
1204
SIGNAL FROM ANTENNA 1
1202
1206
TIM

FIG. 12

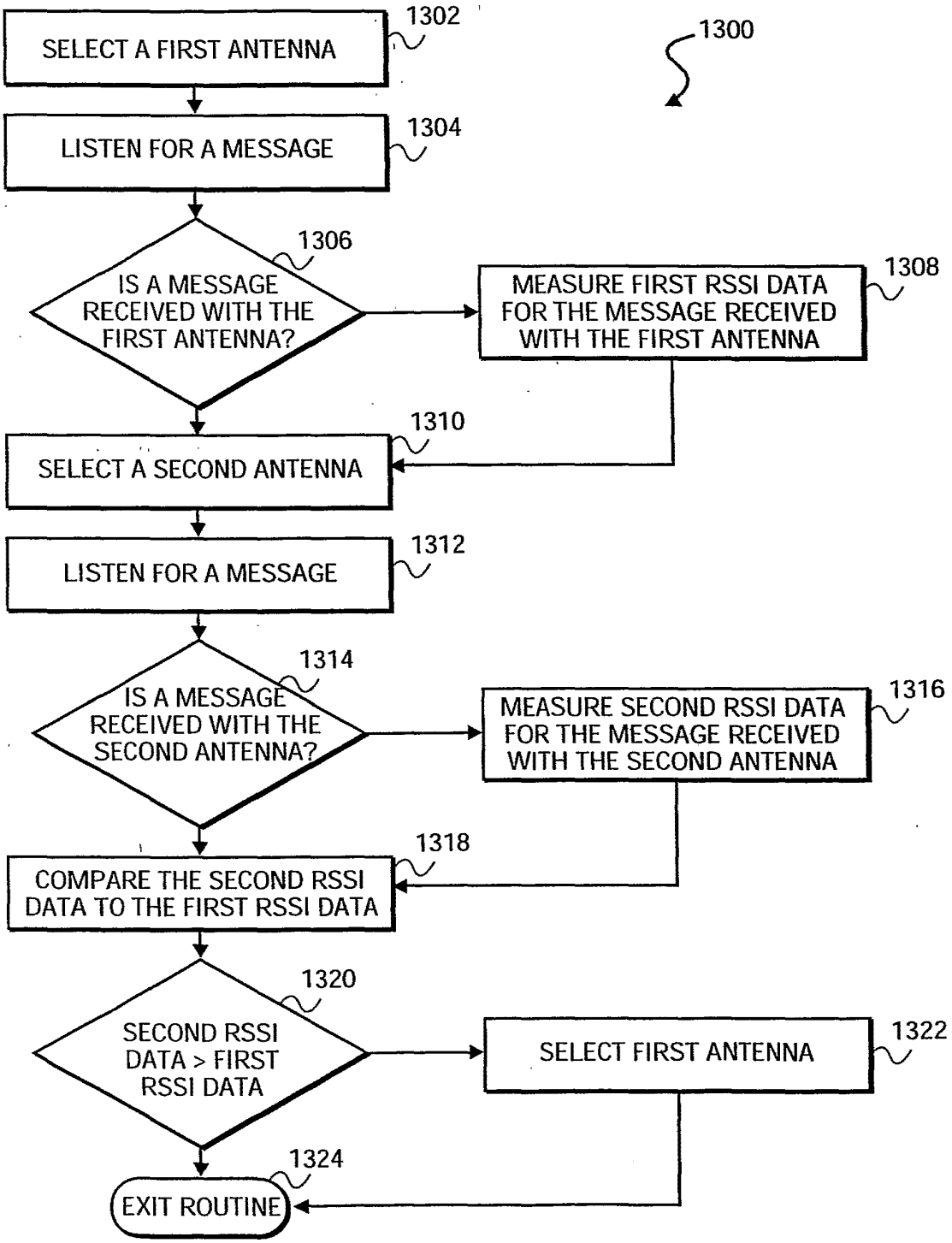
1300
SELECT A FIRST ANTENNA
1302
LISTEN FOR A MESSAGE
1304
IS A MESSAGE RECEIVED WITH THE FIRST ANTENNA?
1306
MEASURE FIRST RSSI DATA FOR THE MESSAGE RECEIVED WITH THE FIRST ANTENNA
1308
SELECT A SECOND ANTENNA
1310
LISTEN FOR A MESSAGE
1312
IS A MESSAGE RECEIVED WITH THE SECOND ANTENNA?
1314
MEASURE SECOND RSSI DATA FOR THE MESSAGE RECEIVED WITH THE SECOND ANTENNA
1316
COMPARE THE SECOND RSSI DATA TO THE FIRST RSSI DATA
1318
SECOND RSSI DATA > FIRST RSSI DATA
1320
SELECT FIRST ANTENNA
1322
EXIT ROUTINE
1324

FIG. 13

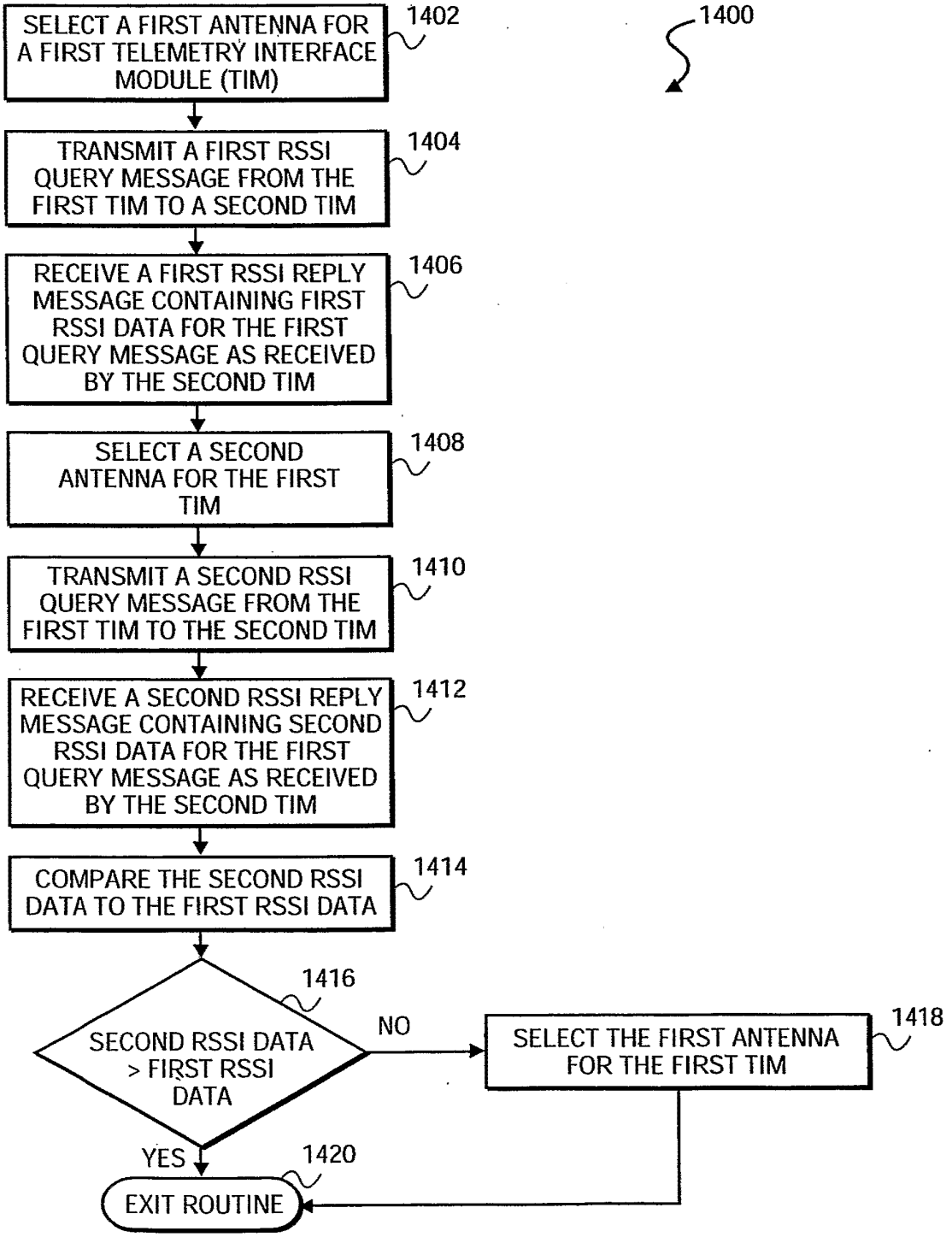
1400
SELECT A FIRST ANTENNA FOR A FIRST TELEMETRY INTERFACE MODULE (TIM)
1402
TRANSMIT A FIRST RSSI QUERY MESSAGE FROM THE FIRST TIM TO A SECOND TIM
1404
RECEIVE A FIRST RSSI REPLY MESSAGE CONTAINING FIRST RSSI DATA FOR THE FIRST QUERY MESSAGE AS RECEIVED BY THE SECOND TIM
1406
SELECT A SECOND ANTENNA FOR THE FIRST TIM
1408
TRANSMIT A SECOND RSSI QUERY MESSAGE FROM THE FIRST TIM TO THE SECOND TIM
1410
RECEIVE A SECOND RSSI REPLY MESSAGE CONTAINING SECOND RSSI DATA FOR THE FIRST QUERY MESSAGE AS RECEIVED BY THE SECOND TIM
1412
COMPARE THE SECOND RSSI DATA TO THE FIRST RSSI DATA
1414
SECOND RSSI DATA > FIRST RSSI DATA
1416
NO
SELECT THE FIRST ANTENNA FOR THE FIRST TIM
1418
YES
1420
EXIT ROUTINE

FIG. 14

(12) INTERNATIONAL APPLICATION PUBLISHED UNDER THE PATENT COOPERATION TREATY (PCT)

(19) World Intellectual Property Organization
International Bureau

(43) International Publication Date
11 December 2003 (11.12.2003)

PCT

(10) International Publication Number
WO 2003/103301 A3

(51) International Patent Classification[7]: H04Q 9/02

(21) International Application Number: PCT/US2003/016801

(22) International Filing Date: 29 May 2003 (29.05.2003)

(25) Filing Language: English

(26) Publication Language: English

(30) Priority Data:
10/161,245 31 May 2002 (31.05.2002) US

(71) Applicant: F W MURPHY [US/US]; 5311 South 122nd East Avenue, Tulsa, OK 74146 (US).

(72) Inventors: HOLMES, John, K.; 8242 South 72nd East Avenue, Tulsa, OK 74133 (US). BRAGG, Steven, D.; 9065 North 175th East Avenue, Owasso, OK 74055 (US).

(74) Agents: MCCLELLAN, Gero, G. et al.; Moser, Patterson & Sheridan, L.L.P., 3040 Post Oak Boulevard, Suite 1500, Houston, TX 77056 (US).

(81) Designated States *(national)*: BR, CA, CN, IN, JP.

(84) Designated States *(regional)*: European patent (AT, BE, BG, CH, CY, CZ, DE, DK, EE, ES, FI, FR, GB, GR, HU, IE, IT, LU, MC, NL, PT, SE, SI, SK, TR).

Published:
— *with international search report*
— *before the expiration of the time limit for amending the claims and to be republished in the event of receipt of amendments*

(88) Date of publication of the international search report: 4 March 2004

For two-letter codes and other abbreviations, refer to the "Guidance Notes on Codes and Abbreviations" appearing at the beginning of each regular issue of the PCT Gazette.

(54) Title: TWO-WAY WIDE AREA TELEMETRY SYSTEM

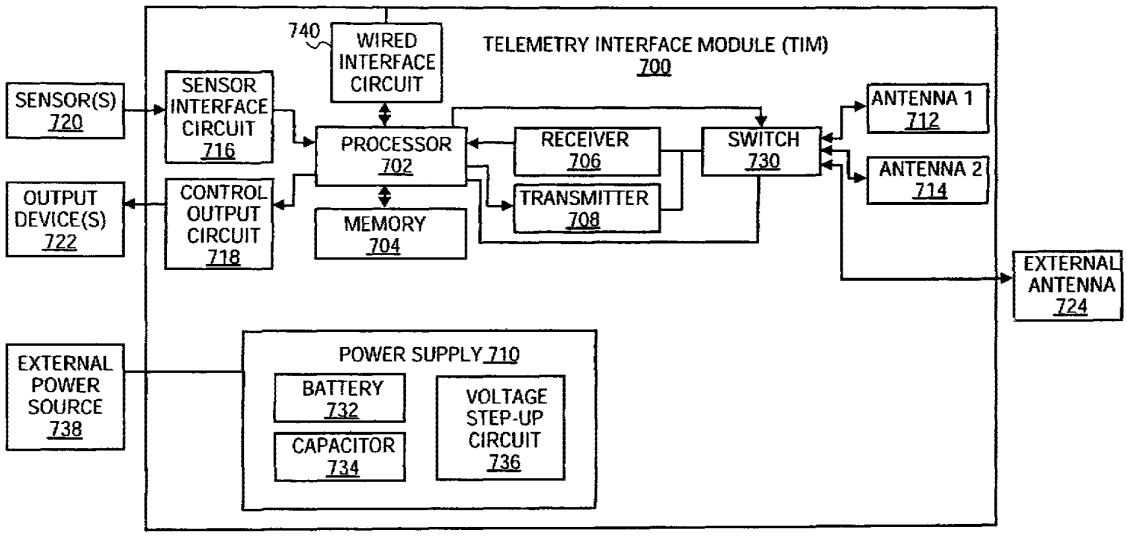

(57) Abstract: A method and apparatus for two-way telemetry is provided. For one embodiment, a telemetry interface module may receive data regarding the strength of transmitted signals. The telemetry interface module may transmit a query message to another telemetry interface module and receive a reply message containing received signal strength indicator (RSSI) data for the query message as received by the other telemetry interface module. For one embodiment, a telemetry interface module may adjust a transmission power level. For one embodiment, a telemetry interface module may select between a plurality of antennae for reception and transmission.

WO 2003/103301 A3

INTERNATIONAL SEARCH REPORT

International Application No
PCT/ 03/16801

A. CLASSIFICATION OF SUBJECT MATTER
IPC 7 H04Q9/02

According to International Patent Classification (IPC) or to both national classification and IPC

B. FIELDS SEARCHED

Minimum documentation searched (classification system followed by classification symbols)
IPC 7 H04Q H04B

Documentation searched other than minimum documentation to the extent that such documents are included in the fields searched

Electronic data base consulted during the international search (name of data base and, where practical, search terms used)

EPO-Internal, WPI Data

C. DOCUMENTS CONSIDERED TO BE RELEVANT

Category °	Citation of document, with indication, where appropriate, of the relevant passages	Relevant to claim No.
X	US 6 157 817 A (KOPITO ANDREW B ET AL) 5 December 2000 (2000-12-05) column 3, line 31 -column 4, line 64	1,9,10, 15,16,23
X	WO 01 87279 A (MUELLER WILFRED ;SMARTSYNCH LTD (CA); JOHNSON RODERICK MICHAEL (CA) 22 November 2001 (2001-11-22) page 8, line 13 -page 9, line 14	6,7
Y	WO 00 41339 A (NOKIA NETWORKS OY ;KATZ MARCOS (FI)) 13 July 2000 (2000-07-13) page 5, line 15 -page 6, line 2 page 7, line 10 -page 8, line 28	1-20,22, 23

-/--

[X] Further documents are listed in the continuation of box C.

[X] Patent family members are listed in annex.

° Special categories of cited documents :

"A" document defining the general state of the art which is not considered to be of particular relevance

"E" earlier document but published on or after the international filing date

"L" document which may throw doubts on priority claim(s) or which is cited to establish the publication date of another citation or other special reason (as specified)

"O" document referring to an oral disclosure, use, exhibition or other means

"P" document published prior to the international filing date but later than the priority date claimed

"T" later document published after the international filing date or priority date and not in conflict with the application but cited to understand the principle or theory underlying the invention

"X" document of particular relevance; the claimed invention cannot be considered novel or cannot be considered to involve an inventive step when the document is taken alone

"Y" document of particular relevance; the claimed invention cannot be considered to involve an inventive step when the document is combined with one or more other such documents, such combination being obvious to a person skilled in the art.

"&" document member of the same patent family

Date of the actual completion of the international search	Date of mailing of the international search report
18 December 2003	08/01/2004

Name and mailing address of the ISA	Authorized officer
European Patent Office, P.B. 5818 Patentlaan 2 NL – 2280 HV Rijswijk Tel. (+31–70) 340–2040, Tx. 31 651 epo nl, Fax: (+31–70) 340–3016	Pham, P

Form PCT/ISA/210 (second sheet) (July 1992)

INTERNATIONAL SEARCH REPORT

International Application No
PCT/ 03/16801

C.(Continuation) DOCUMENTS CONSIDERED TO BE RELEVANT

Category °	Citation of document, with indication, where appropriate, of the relevant passages	Relevant to claim No.
Y	WO 01 20817 A (QUALCOMM INC) 22 March 2001 (2001-03-22) page 1, line 29 -page 2, line 10 page 5, line 6 - line 12 page 7, line 22 -page 8, line 8 ---	1-20,22, 23
A	EP 0 987 842 A (MATSUSHITA ELECTRIC IND CO LTD) 22 March 2000 (2000-03-22) column 3, line 21 -column 4, line 50 column 5, line 32 - line 52 column 7, line 43 -column 8, line 18 column 8, line 55 -column 9, line 56 column 11, line 42 - line 53 column 13, line 10 -column 14, line 24 ---	1-23
A	WO 99 57697 A (ABB POWER T & D CO) 11 November 1999 (1999-11-11) page 5, line 19 -page 6, line 22 page 8, line 22 -page 9, line 10 page 11, line 23 -page 12, line 9 page 13, line 23 -page 14, line 15 ---	1-23
A	US 5 748 104 A (PHILLIPS MARC ET AL) 5 May 1998 (1998-05-05) column 4, line 7 - line 50 column 11, line 29 - line 63 -----	1-23

Form PCT/ISA/210 (continuation of second sheet) (July 1992)

INTERNATIONAL SEARCH REPORT

I ation on patent family members

Internat' Application No
PCT/ J3/16801

Patent document cited in search report		Publication date	Patent family member(s)			Publication date
US 6157817	A	05-12-2000	NONE			
WO 0187279	A	22-11-2001	CA	2308819	A1	15-11-2001
			AU	5998101	A	26-11-2001
			WO	0187279	A2	22-11-2001
WO 0041339	A	13-07-2000	FI	982763	A	22-06-2000
			AU	3046300	A	24-07-2000
			CN	1322413	T	14-11-2001
			EP	1142159	A1	10-10-2001
			WO	0041339	A1	13-07-2000
			JP	2002534900	T	15-10-2002
			NO	20011907	A	18-04-2001
WO 0120817	A	22-03-2001	AU	7372400	A	17-04-2001
			BR	0013934	A	02-07-2002
			CN	1373947	T	09-10-2002
			EP	1212851	A1	12-06-2002
			JP	2003509952	T	11-03-2003
			WO	0120817	A1	22-03-2001
EP 0987842	A	22-03-2000	JP	2002026796	A	25-01-2002
			AU	2961399	A	25-10-1999
			EP	0987842	A1	22-03-2000
			US	6600933	B1	29-07-2003
			CN	1263655	T	16-08-2000
			WO	9952229	A1	14-10-1999
WO 9957697	A	11-11-1999	AU	3772799	A	23-11-1999
			CA	2330643	A1	11-11-1999
			WO	9957697	A1	11-11-1999
			US	2001038343	A1	08-11-2001
US 5748104	A	05-05-1998	US	5892758	A	06-04-1999

Form PCT/ISA/210 (patent family annex) (July 1992)

From the INTERNATIONAL SEARCHING AUTHORITY

PCT

NOTIFICATION OF TRANSMITTAL OF THE INTERNATIONAL SEARCH REPORT AND THE WRITTEN OPINION OF THE INTERNATIONAL SEARCHING AUTHORITY, OR THE DECLARATION

(PCT Rule 44.1)

To:
MACAPAGAL, Lew Edward V.
Attn. Macapagal, Lew Edward V.
660 South Figueroa Street
Suite 2300
Los Angeles, CA 90017
ETATS-UNIS D'AMERIQUE

Date of mailing *(day/month/year)* 26/02/2009	
Applicant's or agent's file reference 2164-3003-PCT	**FOR FURTHER ACTION** See paragraphs 1 and 4 below
International application No. PCT/US2008/078504	International filing date *(day/month/year)* 01/10/2008
Applicant MEDTRONIC MINIMED, INC.	

1. [x] The applicant is hereby notified that the international search report and the written opinion of the International Searching Authority have been established and are transmitted herewith.

   Filing of amendments and statement under Article 19:
   The applicant is entitled, if he so wishes, to amend the claims of the International Application (see Rule 46):

   When? The time limit for filing such amendments is normally two months from the date of transmittal of the International Search Report.

   Where? Directly to the International Bureau of WIPO, 34 chemin des Colombettes 1211 Geneva 20, Switzerland, Fascimile No.: (41-22) 338.82.70

   For more detailed instructions, see the notes on the accompanying sheet.

2. [ ] The applicant is hereby notified that no international search report will be established and that the declaration under Article 17(2)(a) to that effect and the written opinion of the International Searching Authority are transmitted herewith.

3. [ ] **With regard to the protest** against payment of (an) additional fee(s) under Rule 40.2, the applicant is notified that:

   [ ] the protest together with the decision thereon has been transmitted to the International Bureau together with the applicant's request to forward the texts of both the protest and the decision thereon to the designated Offices.

   [ ] no decision has been made yet on the protest; the applicant will be notified as soon as a decision is made.

4. **Reminders**

   Shortly after the expiration of **18 months** from the priority date, the international application will be published by the International Bureau. If the applicant wishes to avoid or postpone publication, a notice of withdrawal of the international application, or of the priority claim, must reach the International Bureau as provided in Rules 90*bis*.1 and 90*bis*.3, respectively, before the completion of the technical preparations for international publication.

   The applicant may submit comments on an informal basis on the written opinion of the International Searching Authority to the International Bureau. The International Bureau will send a copy of such comments to all designated Offices unless an international preliminary examination report has been or is to be established. These comments would also be made available to the public but not before the expiration of 30 months from the priority date.

   Within **19 months** from the priority date, but only in respect of some designated Offices, a demand for international preliminary examination must be filed if the applicant wishes to postpone the entry into the national phase **until 30 months** from the priority date (in some Offices even later); otherwise, the applicant must, **within 20 months** from the priority date, perform the prescribed acts for entry into the national phase before those designated Offices.

   In respect of other designated Offices, the time limit of **30 months** (or later) will apply even if no demand is filed within 19 months.

   See the Annex to Form PCT/IB/301 and, for details about the applicable time limits, Office by Office, see the *PCT Applicant's Guide*, Volume II, National Chapters and the WIPO Internet site.

Name and mailing address of the International Searching Authority European Patent Office, P.B. 5818 Patentlaan 2 NL-2280 HV Rijswijk Tel. (+31-70) 340-2040, Tx. 31 651 epo nl, Fax: (+31-70) 340-3016	Authorized officer Ludmilla Mako

DOCKETED
MAR 12 2009
LHDK&W

NOTES TO FORM PCT/ISA/220

These Notes are intended to give the basic instructions concerning the filing of amendments under article 19. The Notes are based on the requirements of the Patent Cooperation Treaty, the Regulations and the Administrative Instructions under that Treaty. In case of discrepancy between these Notes and those requirements, the latter are applicable. For more detailed information, see also the *PCT Applicant's Guide*, a publication of WIPO.

In these Notes, "Article", "Rule", and "Section" refer to the provisions of the PCT, the PCT Regulations and the PCT Administrative Instructions, respectively.

INSTRUCTIONS CONCERNING AMENDMENTS UNDER ARTICLE 19

The applicant has, after having received the international search report and the written opinion of the International Searching Authority, one opportunity to amend the claims of the international application. It should however be emphasized that, since all parts of the international application (claims,description and drawings) may be amended during the international preliminary examination procedure, there is usually no need to file amendments of the claims under Article 19 except where, e.g. the applicant wants the latter to be published for the purposes of provisional protection or has another reason for amending the claims before international publication. Furthermore, it should be emphasized that provisional protection is available in some States only (see *PCT Applicant's Guide*, Volume I/A, Annexes B1 and B2).

The attention of the applicant is drawn to the fact that amendments to the claims under Article 19 are not allowed where the International Searching Authority has declared, under Article 17(2), that no international search report would be established (see *PCT Applicant's Guide*, Volume I/A, paragraph 296).

What parts of the international application may be amended?

Under Article 19, only the claims may be amended.

During the international phase, the claims may also be amended (or further amended) under Article 34 before the International Preliminary Examining Authority. The description and drawings may only be amended under Article 34 before the International Examining Authority.

Upon entry into the national phase, all parts of the international application may be amended under Article 28 or, where applicable, Article 41.

When? Within 2 months from the date of transmittal of the international search report or 16 months from the priority date, whichever time limit expires later. It should be noted, however, that the amendments will be considered as having been received on time if they are received by the International Bureau after the expiration of the applicable time limit but before the completion of the technical preparations for international publication (Rule 46.1).

Where not to file the amendments?

The amendments may only be filed with the International Bureau and not with the receiving Office or the International Searching Authority (Rule 46.2).

Where a demand for international preliminary examination has been/is filed, see below.

How? Either by cancelling one or more entire claims, by adding one or more new claims or by amending the text of one or more of the claims as filed.

A replacement sheet must be submitted for each sheet of the claims which, on account of an amendment or amendments, differs from the sheet originally filed.

All the claims appearing on a replacement sheet must be numbered in Arabic numerals. Where a claim is cancelled, no renumbering of the other claims is required. In all cases where claims are renumbered, they must be renumbered consecutively (Section 205(b)).

The amendments must be made in the language in which the international application is to be published.

What documents must/may accompany the amendments?

Letter (Section 205(b)):

The amendments must be submitted with a letter.

The letter will not be published with the international application and the amended claims. It should not be confused with the "Statement under Article 19(1)" (see below, under "Statement under Article 19(1)").

The letter must be in English or French, at the choice of the applicant. However, if the language of the international application is English, the letter must be in English; if the language of the international application is French, the letter must be in French.

The letter must indicate the differences between the claims as filed and the claims as amended. It must, in particular, indicate, in connection with each claim appearing in the international application (it being understood that identical indications concerning several claims may be grouped),whether

(i) the claim is unchanged;

(ii) the claim is cancelled;

(iii) the claim is new;

(iv) the claim replaces one or more claims as filed;

(v) the claim is the result of the division of a claim as filed.

The following examples illustrate the manner in which amendments must be explained in the accompanying letter:

1. [Where originally there were 48 claims and after amendment of some claims there are 51]:
"Claims 1 to 29, 31, 32, 34, 35, 37 to 48 replaced by amended claims bearing the same numbers; claims 30, 33 and 36 unchanged; new claims 49 to 51 added."

2. [Where originally there were 15 claims and after amendment of all claims there are 11]:
"Claims 1 to 15 replaced by amended claims 1 to 11."

3. [Where originally there were 14 claims and the amendments consist in cancelling some claims and in adding new claims]:
"Claims 1 to 6 and 14 unchanged; claims 7 to 13 cancelled; new claims 15, 16 and 17 added." or
"Claims 7 to 13 cancelled; new claims 15, 16 and 17 added; all other claims unchanged."

4. [Where various kinds of amendments are made]:
"Claims 1–10 unchanged; claims 11 to 13, 18 and 19 cancelled; claims 14, 15 and 16 replaced by amended claim 14; claim 17 subdivided into amended claims 15, 16 and 17; new claims 20 and 21 added."

"Statement under article 19(1)" (Rule 46.4)

The amendments may be accompanied by a statement explaining the amendments and indicating any impact that such amendments might have on the description and the drawings (which cannot be amended under Article 19(1)).

The statement will be published with the international application and the amended claims.

It must be in the language in which the international application is to be published.

It must be brief, not exceeding 500 words if in English or if translated into English.

It should not be confused with and does not replace the letter indicating the differences between the claims as filed and as amended. It must be filed on a separate sheet and must be identified as such by a heading, preferably by using the words "Statement under Article 19(1)."

It may not contain any disparaging comments on the international search report or the relevance of citations contained in that report. Reference to citations, relevant to a given claim, contained in the international search report may be made only in connection with an amendment of that claim.

Consequence if a demand for international preliminary examination has already been filed

If, at the time of filing any amendments and any accompanying statement, under Article 19, a demand for international preliminary examination has already been submitted, the applicant must preferably, at the time of filing the amendments (and any statement) with the International Bureau, also file with the International Preliminary Examining Authority a copy of such amendments (and of any statement) and, where required, a translation of such amendments for the procedure before that Authority (see Rules 55.3(a) and 62.2, first sentence). For further information, see the Notes to the demand form (PCT/IPEA/401).

If a demand for international preliminary examination is made, the written opinion of the International Searching Authority will, except in certain cases where the International Preliminary Examining Authority did not act as International Searching Authority and where it has notified the International Bureau under Rule 66.1*bis*(b), be considered to be a written opinion of the International Preliminary Examining Authority. If a demand is made, the applicant may submit to the International Preliminary Examining Authority a reply to the written opinion together, where appropriate, with amendments before the expiration of 3 months from the date of mailing of Form PCT/ISA/220 or before the expiration of 22 months from the priority date, whichever expires later (Rule 43*bis*.1(c)).

Consequence with regard to translation of the international application for entry into the national phase

The applicant's attention is drawn to the fact that, upon entry into the national phase, a translation of the claims as amended under Article 19 may have to be furnished to the designated/elected Offices, instead of, or in addition to, the translation of the claims as filed.

For further details on the requirements of each designated/elected Office, see the *PCT Applicant's Guide,* Volume II.

PATENT COOPERATION TREATY

PCT

INTERNATIONAL SEARCH REPORT

(PCT Article 18 and Rules 43 and 44)

Applicant's or agent's file reference 2164-3003-PCT	**FOR FURTHER ACTION**	see Form PCT/ISA/220 as well as, where applicable, item 5 below.
International application No. PCT/US2008/078504	International filing date *(day/month/year)* 01/10/2008	(Earliest) Priority Date *(day/month/year)* 02/10/2007
Applicant MEDTRONIC MINIMED, INC.		

This international search report has been prepared by this International Searching Authority and is transmitted to the applicant according to Article 18. A copy is being transmitted to the International Bureau.

This international search report consists of a total of 4 sheets.

[X] It is also accompanied by a copy of each prior art document cited in this report.

1. **Basis of the report**
   a. With regard to the **language**, the international search was carried out on the basis of:
      [X] the international application in the language in which it was filed
      [ ] a translation of the international application into _____, which is the language of a translation furnished for the purposes of international search (Rules 12.3(a) and 23.1(b))
   b. [ ] This international search report has been established taking into account the **rectification of an obvious mistake** authorized by or notified to this Authority under Rule 91 (Rule 43.6*bis*(a)).
   c. [ ] With regard to any **nucleotide and/or amino acid sequence** disclosed in the international application, see Box No. I.
2. [ ] **Certain claims were found unsearchable** (See Box No. II)
3. [ ] **Unity of invention is lacking** (see Box No III)
4. With regard to the **title**,
   [X] the text is approved as submitted by the applicant
   [ ] the text has been established by this Authority to read as follows:
5. With regard to the **abstract**,
   [X] the text is approved as submitted by the applicant
   [ ] the text has been established, according to Rule 38.2(b), by this Authority as it appears in Box No. IV. The applicant may, within one month from the date of mailing of this international search report, submit comments to this Authority
6. With regard to the **drawings**,
   a. the figure of the **drawings** to be published with the abstract is Figure No. 1
      [X] as suggested by the applicant
      [ ] as selected by this Authority, because the applicant failed to suggest a figure
      [ ] as selected by this Authority, because this figure better characterizes the invention
   b. [ ] none of the figures is to be published with the abstract

A. CLASSIFICATION OF SUBJECT MATTER

INV. H04Q9/02 A61B5/00

According to International Patent Classification (IPC) or to both national classification and IPC

B. FIELDS SEARCHED

Minimum documentation searched (classification system followed by classification symbols)

H04Q A61B G08C

Documentation searched other than minimum documentation to the extent that such documents are included in the fields searched

Electronic data base consulted during the international search (name of data base and, where practical, search terms used)

EPO-Internal

C. DOCUMENTS CONSIDERED TO BE RELEVANT

Category*	Citation of document, with indication, where appropriate, of the relevant passages	Relevant to claim No.
X	US 2003/208110 A1 (MAULT JAMES R [US] ET AL) 6 November 2003 (2003-11-06)	1,2,8-29
Y	paragraphs [0008], [0009] paragraph [0028] paragraphs [0032] - [0034] paragraphs [0047] - [0050] paragraphs [0058] - [0064] paragraph [0068] claims 1,2	3-7
X	US 2002/158775 A1 (WALLACE DAVID A [US]) 31 October 2002 (2002-10-31) paragraphs [0006] - [0008] paragraphs [0024] - [0029] paragraph [0041] paragraphs [0060] - [0065]	1,2,8-29

-/--

[X] Further documents are listed in the continuation of Box C.

[X] See patent family annex.

* Special categories of cited documents :

"A" document defining the general state of the art which is not considered to be of particular relevance

"E" earlier document but published on or after the international filing date

"L" document which may throw doubts on priority claim(s) or which is cited to establish the publication date of another citation or other special reason (as specified)

"O" document referring to an oral disclosure, use, exhibition or other means

"P" document published prior to the international filing date but later than the priority date claimed

"T" later document published after the international filing date or priority date and not in conflict with the application but cited to understand the principle or theory underlying the invention

"X" document of particular relevance; the claimed invention cannot be considered novel or cannot be considered to involve an inventive step when the document is taken alone

"Y" document of particular relevance; the claimed invention cannot be considered to involve an inventive step when the document is combined with one or more other such documents, such combination being obvious to a person skilled in the art.

"&" document member of the same patent family

Date of the actual completion of the international search	Date of mailing of the international search report
16 February 2009	26/02/2009

Name and mailing address of the ISA/	Authorized officer
European Patent Office, P.B. 5818 Patentlaan 2 NL - 2280 HV Rijswijk Tel. (+31-70) 340-2040, Fax: (+31-70) 340-3016	Barbelanne, Alain

2

C(Continuation). DOCUMENTS CONSIDERED TO BE RELEVANT

Category*	Citation of document, with indication, where appropriate, of the relevant passages	Relevant to claim No.
X	US 2003/208113 A1 (MAULT JAMES R [US] ET AL) 6 November 2003 (2003-11-06) paragraphs [0013], [0014] paragraphs [0079] - [0082] paragraphs [0085], [0086] paragraph [0092] paragraph [0100] -----	1,2,8-29
X	US 2005/102167 A1 (KAPOOR ASHOK K [US]) 12 May 2005 (2005-05-12) paragraphs [0005] - [0011] paragraph [0032] paragraphs [0040] - [0045] paragraph [0061] paragraphs [0067] - [0070] paragraph [0102] claims 1,2,8,9,18 -----	1,2,8-29
A	WO 03/103301 A (F W MURPHY [US]) 11 December 2003 (2003-12-11)	1
Y	paragraphs [0005], [0006] paragraphs [0055] - [0059] paragraph [0067] -----	3-7

2

Patent document cited in search report	Publication date	Patent family member(s)	Publication date
US 2003208110 A1	06-11-2003	NONE	
US 2002158775 A1	31-10-2002	NONE	
US 2003208113 A1	06-11-2003	NONE	
US 2005102167 A1	12-05-2005	NONE	
WO 03103301 A	11-12-2003	BR PI0311542 A	26-06-2007
		CA 2534727 A1	11-12-2003
		CN 1729713 A	01-02-2006
		EP 1510101 A2	02-03-2005

From the
INTERNATIONAL SEARCHING AUTHORITY

To:

see form PCT/ISA/220

PCT

WRITTEN OPINION OF THE INTERNATIONAL SEARCHING AUTHORITY

(PCT Rule 43*bis*.1)

Date of mailing
(day/month/year) see form PCT/ISA/210 (second sheet)

Applicant's or agent's file reference
see form PCT/ISA/220

FOR FURTHER ACTION
See paragraph 2 below

International application No.	International filing date *(day/month/year)*	Priority date *(day/month/year)*
PCT/US2008/078504	01.10.2008	02.10.2007

International Patent Classification (IPC) or both national classification and IPC
INV. H04Q9/02 A61B5/00

Applicant
MEDTRONIC MINIMED, INC.

1. This opinion contains indications relating to the following items:

- ☒ Box No. I Basis of the opinion
- ☒ Box No. II Priority
- ☐ Box No. III Non-establishment of opinion with regard to novelty, inventive step and industrial applicability
- ☐ Box No. IV Lack of unity of invention
- ☒ Box No. V Reasoned statement under Rule 43*bis*.1(a)(i) with regard to novelty, inventive step or industrial applicability; citations and explanations supporting such statement
- ☐ Box No. VI Certain documents cited
- ☐ Box No. VII Certain defects in the international application
- ☐ Box No. VIII Certain observations on the international application

2. **FURTHER ACTION**

If a demand for international preliminary examination is made, this opinion will usually be considered to be a written opinion of the International Preliminary Examining Authority ("IPEA") except that this does not apply where the applicant chooses an Authority other than this one to be the IPEA and the chosen IPEA has notifed the International Bureau under Rule 66.1*bis*(b) that written opinions of this International Searching Authority will not be so considered.

If this opinion is, as provided above, considered to be a written opinion of the IPEA, the applicant is invited to submit to the IPEA a written reply together, where appropriate, with amendments, before the expiration of 3 months from the date of mailing of Form PCT/ISA/220 or before the expiration of 22 months from the priority date, whichever expires later.

For further options, see Form PCT/ISA/220.

3. For further details, see notes to Form PCT/ISA/220.

Name and mailing address of the ISA:	Date of completion of this opinion	Authorized Officer
European Patent Office - P.B. 5818 Patentlaan 2 NL-2280 HV Rijswijk - Pays Bas Tel. +31 70 340 - 2040 Tx: 31 651 epo nl Fax: +31 70 340 - 3016	See form PCT/ISA/210	Barbelanne, Alain Telephone No. +31 70 340-4539

Box No. I Basis of the opinion

1. With regard to the **language**, this opinion has been established on the basis of:

   ☒ the international application in the language in which it was filed

   ☐ a translation of the international application into , which is the language of a translation furnished for the purposes of international search (Rules 12.3(a) and 23.1 (b)).

2. ☐ This opinion has been established taking into account the **rectification of an obvious mistake** authorized by or notified to this Authority under Rule 91 (Rule 43bis.1(a))

3. With regard to any **nucleotide and/or amino acid sequence** disclosed in the international application and necessary to the claimed invention, this opinion has been established on the basis of:

   a. type of material:

   ☐ a sequence listing

   ☐ table(s) related to the sequence listing

   b. format of material:

   ☐ on paper

   ☐ in electronic form

   c. time of filing/furnishing:

   ☐ contained in the international application as filed.

   ☐ filed together with the international application in electronic form.

   ☐ furnished subsequently to this Authority for the purposes of search.

4. ☐ In addition, in the case that more than one version or copy of a sequence listing and/or table relating thereto has been filed or furnished, the required statements that the information in the subsequent or additional copies is identical to that in the application as filed or does not go beyond the application as filed, as appropriate, were furnished.

5. Additional comments:

Box No. II Priority

1. ☒ The validity of the priority claim has not been considered because the International Searching Authority does not have in its possession a copy of the earlier application whose priority has been claimed or, where required, a translation of that earlier application. This opinion has nevertheless been established on the assumption that the relevant date (Rules 43*bis*.1 and 64.1) is the claimed priority date.

2. ☐ This opinion has been established as if no priority had been claimed due to the fact that the priority claim has been found invalid (Rules 43*bis*.1 and 64.1). Thus for the purposes of this opinion, the international filing date indicated above is considered to be the relevant date.

3. Additional observations, if necessary:

Box No. V Reasoned statement under Rule 43*bis*.1(a)(i) with regard to novelty, inventive step or industrial applicability; citations and explanations supporting such statement

1. Statement

Novelty (N)	Yes:	Claims	3-7
	No:	Claims	1-2, 8-29
Inventive step (IS)	Yes:	Claims	
	No:	Claims	1-29
Industrial applicability (IA)	Yes:	Claims	1-29
	No:	Claims	

2. Citations and explanations

see separate sheet

Re Item V.

1 Reference is made to the following documents:

D1 : US 2003/208110 A1 (MAULT JAMES R [US] ET AL) 6 November 2003 (2003-11-06)

D2: US 2002/158775 A1 (WALLACE DAVID A [US]) 31 October 2002 (2002-10-31)

D3: US 2003/208113 A1 (MAULT JAMES R [US] ET AL) 6 November 2003 (2003-11-06)

D4: US 2005/102167 A1 (KAPOOR ASHOK K [US]) 12 May 2005 (2005-05-12)

D5: WO 03/103301 A (F W MURPHY [US]) 11 December 2003 (2003-12-11)

2 INDEPENDENT CLAIM 1

2.1 The present application does not meet the criteria of Article 33(1) PCT, because the subject-matter of claim 1 is not new in the sense of Article 33(2) PCT.

Document D1 discloses (the references in parentheses applying to this document):

A telemetered characteristic sensor transceiver for exchanging data with at least one remote device, the transceiver comprising:

(see paragraphs [0032] and [0047])

a housing detachably coupled to a sensor located on a body of a user, the sensor producing a signal indicative of a user characteristic;

(see paragraphs [0047]-[0048])

a processor formed within the housing and in communication with the sensor for processing the signal produced by the sensor;

(see paragraphs [0032]-[0033] and [0047]-[0048])

a transmitter coupled to the processor for transmitting data to at least one remote device;

(see paragraphs [0032]-[0033] and [0047]-[0048])

a receiver coupled to the processor for receiving data from the at least one remote device; and

(see paragraphs [0032]-[0033] and [0047]-[0048])

a memory coupled to the processor for storing data,

(see paragraphs [0047]-[0048])

wherein the processor performs calculations using at least one of the signal produced by the sensor, the data received from the at least one remote device and the data stored in the memory, and performs at least one of storing the calculations in the memory and transmitting the calculations to the at least one remote device through the transmitter.

(see paragraphs [0032]-[0034]; [0047]-[0048]; [0050]; [0064] and [0068])

The subject-matter of **claim 1** is therefore not **new** (Article 33(2) PCT).

3 DEPENDENT CLAIMS 2-29

Dependent claims 2-29 do not contain any features which, in combination with the features of any claim to which they refer, meet the requirements of the PCT in respect of **novelty or inventive step** (Article 33(2) and (3) PCT), see documents D1, D2, D3, D4 and D5 and the corresponding passages cited in the international search report.

Possible steps after receipt of the international search report (ISR) and written opinion of the International Searching Authority (WO-ISA)

General information	For all international applications filed on or after 01/01/2004 the competent ISA will establish an ISR. It is accompanied by the WO-ISA. Unlike the former written opinion of the IPEA (Rule 66.2 PCT), the WO-ISA is not meant to be responded to, but to be taken into consideration for further procedural steps. This document explains about the possibilities.
Amending claims under Art. 19 PCT	Within 2 months after the date of mailing of the ISR and the WO-ISA the applicant may file amended claims under Art. 19 PCT directly with the International Bureau of WIPO. The PCT reform of 2004 did not change this procedure. For further information please see Rule 46 PCT as well as form PCT/ISA/220 and the corresponding Notes to form PCT/ISA/220.
Filing a demand for international preliminary examination	In principle, the WO-ISA will be considered as the written opinion of the IPEA. This should, in many cases, make it unnecessary to file a demand for international preliminary examination. If the applicant nevertheless wishes to file a demand this must be done before expiry of 3 months after the date of mailing of the ISR/ WO-ISA or 22 months after priority date, whichever expires later (Rule 54bis PCT). Amendments under Art. 34 PCT can be filed with the IPEA as before, normally at the same time as filing the demand (Rule 66.1 (b) PCT). If a demand for international preliminary examination is filed and no comments/amendments have been received the WO-ISA will be transformed by the IPEA into an IPRP (International Preliminary Report on Patentability) which would merely reflect the content of the WO-ISA. The demand can still be withdrawn (Art. 37 PCT).
Filing informal comments	After receipt of the ISR/WO-ISA the applicant may file informal comments on the WO-ISA directly with the International Bureau of WIPO. These will be communicated to the designated Offices together with the IPRP (International Preliminary Report on Patentability) at 30 months from the priority date. Please also refer to the next box.
End of the international phase	At the end of the international phase the International Bureau of WIPO will transform the WO-ISA or, if a demand was filed, the written opinion of the IPEA into the IPRP, which will then be transmitted together with possible informal comments to the designated Offices. The IPRP replaces the former IPER (international preliminary examination report).
Relevant PCT Rules and more information	Rule 43 PCT, Rule 43bis PCT, Rule 44 PCT, Rule 44bis PCT, PCT Newsletter 12/2003, OJ 11/2003, OJ 12/2003

Electronic Acknowledgement Receipt

EFS ID:	7152924
Application Number:	12056651
International Application Number:	
Confirmation Number:	9941
Title of Invention:	GLUCOSE SENSOR TRANSCEIVER
First Named Inventor/Applicant Name:	Himanshu Patel
Customer Number:	23608
Filer:	Eric Shun Chen/Christine Pineiro
Filer Authorized By:	Eric Shun Chen
Attorney Docket Number:	P25732 US
Receipt Date:	05-MAR-2010
Filing Date:	27-MAR-2008
Time Stamp:	17:47:48
Application Type:	Utility under 35 USC 111(a)

Payment information:

Submitted with Payment	no

File Listing:

Document Number	Document Description	File Name	File Size(Bytes)/ Message Digest	Multi Part /.zip	Pages (if appl.)
1	Information Disclosure Statement (IDS) Filed (SB/08)	P25732_US_IDS_SB08_2010-03-05.pdf	612333 234379b548607ef264750123e0f6132d78af4667	no	4

Warnings:

Information:

2	Foreign Reference	WO03103301A2.pdf	1479463 9e774a0d14c75ee5731d7138d5f67cda60d4bf66	no	37
Warnings:					
Information:					
3	Foreign Reference	WO03103301A3.pdf	172253 5a738ef7695fca405c442d2ff1eedf26237ec16c	no	4
Warnings:					
Information:					
4	NPL Documents	P25732_PCT_Search_Report_and_Written_Opinion.pdf	815774 4dc87e0b04dd2a391a55b5c616cdb00c01ba379f	no	13
Warnings:					
Information:					
			Total Files Size (in bytes):	3079823	

This Acknowledgement Receipt evidences receipt on the noted date by the USPTO of the indicated documents, characterized by the applicant, and including page counts, where applicable. It serves as evidence of receipt similar to a Post Card, as described in MPEP 503.

New Applications Under 35 U.S.C. 111
If a new application is being filed and the application includes the necessary components for a filing date (see 37 CFR 1.53(b)-(d) and MPEP 506), a Filing Receipt (37 CFR 1.54) will be issued in due course and the date shown on this Acknowledgement Receipt will establish the filing date of the application.

National Stage of an International Application under 35 U.S.C. 371
If a timely submission to enter the national stage of an international application is compliant with the conditions of 35 U.S.C. 371 and other applicable requirements a Form PCT/DO/EO/903 indicating acceptance of the application as a national stage submission under 35 U.S.C. 371 will be issued in addition to the Filing Receipt, in due course.

New International Application Filed with the USPTO as a Receiving Office
If a new international application is being filed and the international application includes the necessary components for an international filing date (see PCT Article 11 and MPEP 1810), a Notification of the International Application Number and of the International Filing Date (Form PCT/RO/105) will be issued in due course, subject to prescriptions concerning national security, and the date shown on this Acknowledgement Receipt will establish the international filing date of the application.

UNITED STATES PATENT AND TRADEMARK OFFICE

UNITED STATES DEPARTMENT OF COMMERCE
United States Patent and Trademark Office
Address: COMMISSIONER FOR PATENTS
P.O. Box 1450
Alexandria, Virginia 22313-1450
www.uspto.gov

APPLICATION NUMBER	FILING OR 371(C) DATE	FIRST NAMED APPLICANT	ATTY. DOCKET NO./TITLE
12/056,651	03/27/2008	Himanshu Patel	2164-3003

CONFIRMATION NO. 9941

POA ACCEPTANCE LETTER

23608
MEDTRONIC MINIMED INC.
18000 DEVONSHIRE STREET
NORTHRIDGE, CA 91325-1219

OC000000039059983

Date Mailed: 12/08/2009

NOTICE OF ACCEPTANCE OF POWER OF ATTORNEY

This is in response to the Power of Attorney filed 11/24/2009.

The Power of Attorney in this application is accepted. Correspondence in this application will be mailed to the above address as provided by 37 CFR 1.33.

/sibrahim/

Office of Data Management, Application Assistance Unit (571) 272-4000, or (571) 272-4200, or 1-888-786-0101

UNITED STATES PATENT AND TRADEMARK OFFICE

UNITED STATES DEPARTMENT OF COMMERCE
United States Patent and Trademark Office
Address: COMMISSIONER FOR PATENTS
P.O. Box 1450
Alexandria, Virginia 22313-1450
www.uspto.gov

APPLICATION NUMBER	FILING OR 371(C) DATE	FIRST NAMED APPLICANT	ATTY. DOCKET NO./TITLE
12/056,651	03/27/2008	Himanshu Patel	2164-3003

CONFIRMATION NO. 9941

POWER OF ATTORNEY NOTICE

35884
LEE, HONG, DEGERMAN, KANG & WAIMEY
660 S. FIGUEROA STREET
Suite 2300
LOS ANGELES, CA 90017

OC000000039059916

Date Mailed: 12/08/2009

NOTICE REGARDING CHANGE OF POWER OF ATTORNEY

This is in response to the Power of Attorney filed 11/24/2009.

- The Power of Attorney to you in this application has been revoked by the assignee who has intervened as provided by 37 CFR 3.71. Future correspondence will be mailed to the new address of record(37 CFR 1.33).

/sibrahim/

Office of Data Management, Application Assistance Unit (571) 272-4000, or (571) 272-4200, or 1-888-786-0101

UNITED STATES PATENT AND TRADEMARK OFFICE

UNITED STATES DEPARTMENT OF COMMERCE
United States Patent and Trademark Office
Address: COMMISSIONER FOR PATENTS
P.O. Box 1450
Alexandria, Virginia 22313-1450
www.uspto.gov

APPLICATION NUMBER	PATENT NUMBER	GROUP ART UNIT	FILE WRAPPER LOCATION
12/056,651		3735	3735

OC000000039112367

Correspondence Address/Fee Address Change

The following fields have been set to Customer Number 23608 on 12/04/2009

- **Correspondence Address**
- **Maintenance Fee Address**
- **Power of Attorney Address**

The address of record for Customer Number 23608 is:

23608
MEDTRONIC MINIMED INC.
18000 DEVONSHIRE STREET
NORTHRIDGE, CA 91325-1219

IN THE UNITED STATES PATENT AND TRADEMARK OFFICE

In re Utility Application of:	)	
Himanshu Patel et al.	)	Group Art Unit: 3735
Serial No.: 12/056,651	)	
Filed: March 27, 2008	)	Examiner: Nasser, Robert L.
For: GLUCOSE SENSOR TRANSCEIVER	)	
	)	

POWER OF ATTORNEY BY ASSIGNEE AND EXCLUSION OF INVENTOR UNDER RULE 3.71, AND STATEMENT UNDER 3.73(b)

Commissioner for Patents
P.O. Box 1450
Alexandria, VA 22313-1450

Dear Sir:

The undersigned **Eric P. Geismar** is a representative authorized to sign on behalf of the assignee of the entire interest in the above-identified subject application, **MEDTRONIC MINIMED, INC.** and hereby appoints:

Paul H. Kovelman, Reg. No. 35,228
Ajit S. Narang, Reg. No. 55,480
Eric S. Chen, Reg. No. 43,542
Konrad K. Chan, Reg. No. 57,857
Vivian S. Shin, Reg. No. 43,919
Richard K. Yoon, Reg. No. 42,247
Michael J. Jaro, Reg. No. 34,472
Mary P. Bauman, Reg. No. 31,926
Girma Wolde-Michael, Reg. No. 36,724

to prosecute this application and to transact all business in the United States Patent and Trademark Office connected therewith, said appointment to be to the exclusion of the inventor and his attorney in accordance with the provisions of Rule 32 of the Patent Office Rules of Practice.

MEDTRONIC MINIMED, INC., per 37 C.F.R. §3.73(b), certifies that the evidentiary documents with respect to its ownership have been reviewed and that to the best of the undersigned's knowledge and belief, title is in the assignee seeking this action.

MEDTRONIC MINIMED, INC., declares that 100% ownership is established by an assignment to be in the Regular Utility Patent Application, and that the Inventors are under an obligation to assign the application to **MEDTRONIC MINIMED, INC.**

MEDTRONIC MINIMED, INC., a corporation states that it is the assignee of the entire right, title, and interest in the patent application/patent identified above by virtue of an assignment from the inventor(s) of the patent application/patent identified above. A copy of the assignment is attached.

As required by 37 CFR 3.73(b)(1)(i), the documentary evidence of the chain of title from the original owner to the assignee was, or concurrently is being, submitted for recordation pursuant to 37 CFR §3.11.

Please direct all telephone calls to Paul H. Kovelman at (818) 576-5313 and all correspondence relative to said application to the following address:

Paul H. Kovelman
Medtronic MiniMed, Inc.
18000 Devonshire Street
Northridge, California 91325
Customer Number: 23608

ASSIGNEE: **MEDTRONIC MINIMED, INC.**

Date: 11/24/2009

Signature:

Eric P. Geismar
Title: Vice President and Senior Counsel
Address: 18000 Devonshire Street
Northridge, CA 91325-1219

UNITED STATES PATENT AND TRADEMARK OFFICE

UNDER SECRETARY OF COMMERCE FOR INTELLECTUAL PROPERTY AND
DIRECTOR OF THE UNITED STATES PATENT AND TRADEMARK OFFICE

700365725A

MARCH 31, 2008

PTAS - KN

JONATHAN Y. KANG, ESQ.
LEE, HONG, DEGERMAN, KANG & SCHMADEKA
660 SOUTH FIGUEROA STREET
SUITE 2300
LOS ANGELES, CA 90017

UNITED STATES PATENT AND TRADEMARK OFFICE
NOTICE OF RECORDATION OF ASSIGNMENT DOCUMENT

THE ENCLOSED DOCUMENT HAS BEEN RECORDED BY THE ASSIGNMENT DIVISION OF THE U.S. PATENT AND TRADEMARK OFFICE. A COMPLETE MICROFILM COPY IS AVAILABLE AT THE ASSIGNMENT SEARCH ROOM ON THE REEL AND FRAME NUMBER REFERENCED BELOW.

PLEASE REVIEW ALL INFORMATION CONTAINED ON THIS NOTICE. THE INFORMATION CONTAINED ON THIS RECORDATION NOTICE REFLECTS THE DATA PRESENT IN THE PATENT AND TRADEMARK ASSIGNMENT SYSTEM. IF YOU SHOULD FIND ANY ERRORS OR HAVE QUESTIONS CONCERNING THIS NOTICE, YOU MAY CONTACT THE EMPLOYEE WHOSE NAME APPEARS ON THIS NOTICE AT 571-272-3350. PLEASE SEND REQUEST FOR CORRECTION TO: U.S. PATENT AND TRADEMARK OFFICE, MAIL STOP: ASSIGNMENT SERVICES BRANCH, P.O. BOX 1450, ALEXANDRIA, VA 22313.

RECORDATION DATE: 03/27/2008 REEL/FRAME: 020725/0831
NUMBER OF PAGES: 6

BRIEF: ASSIGNMENT OF ASSIGNOR'S INTEREST (SEE DOCUMENT FOR DETAILS).
DOCKET NUMBER: 2164-3003

ASSIGNOR:
PATEL, HIMANSHU DOC DATE: 03/17/2008

ASSIGNOR:
MORGAN, WAYNE A. DOC DATE: 03/19/2008

ASSIGNOR:
CHERNOFF, EDWARD DOC DATE: 03/24/2008

ASSIGNOR:
MASTROTOTARO, JOHN J. DOC DATE: 03/25/2008

ASSIGNEE:
MEDTRONIC MINIMED, INC.
18000 DEVONSHIRE STREET
NORTHRIDGE, CALIFORNIA 91325-1219

020725/0831 PAGE 2

SERIAL NUMBER: 12056651 FILING DATE:
PATENT NUMBER: ISSUE DATE:
TITLE: GLUCOSE SENSOR TRANSCEIVER

ASSIGNMENT SERVICES BRANCH
PUBLIC RECORDS DIVISION

03/27/2008
700365725

Form PTO-1595
1-3-92

U.S. DEPARTMENT OF COMMERCE
Patent and Trademark Office

RECORDATION FORM COVER LETTER
PATENTS ONLY

Docket No.: 2164-3003

To the Assistant Commissioner for Patents: *Please record the attached original documents or copy thereof.*

1. Name of conveying party: Himanshu Patel, Wayne A. Morgan,
2. Edward Chernoff, and John J. Mastrototaro
3. Additional name(s) of conveying party(ies) attached? ☐ Yes ☒ No

2. Name and address of receiving party(ies):

MEDTRONIC MINIMED, INC.
18000 Devonshire Street
Northridge, CA 91325-1219

Additional name(s) & address(es) attached? ☐ Yes ☒ No

3. Nature of conveyance:

☒ Assignment ☐ Merger
☐ Security Agreement ☐ Change of Name
☐ Joint Research Agreement
☐ Government Interest Assignment
☐ Executive Order 9424, Confirmatory License
☐ Other _____

Execution Date: March 17, March 19, March 24, and March 25, 2008

4. Application number(s) or patent number(s): ☐ This document is being filed together with a new application.

A. Patent Application No.(s) 12/056,651

B. Patent No.(s) N/A

Additional numbers attached? ☐ Yes ☒ No

5. Name and address of party to whom correspondence concerning document should be mailed:

JONATHAN Y. KANG, ESQ.
LEE, HONG, DEGERMAN, KANG & SCHMADEKA
660 South Figueroa Street
Suite 2300
Los Angeles, CA 90017

6. Total number of applications and patents involved: [1]

7. Total fee (37 CFR 3.41) $40

☐ Enclosed
☒ Authorized to be charged to deposit account

8. Deposit account number: 502290
(Attach duplicate copy of this page if paying by deposit account)

DO NOT USE THIS SPACE

9. Statement and signature.

To the best of my knowledge and belief, the foregoing is true and correct and any attached copy is a true copy of the original document.

Lew Edward V. Macapagal, Reg. No. 55,416

Date: March 27, 2008

OMB No. 0651-0011 (exp. 4/94)

Mail documents to be recorded with required cover sheet information to:
Mail Stop Assignment Recordation Services
Director of the U.S. Patent and Trademark Office
P.O. Box 1450
Alexandria, VA 22313-1450

ASSIGNMENT

Attorney Docket No.: 2164-3003

(1-4) Insert Name(s) of Inventor(s)

(1) HIMANSHU PATEL
(2) WAYNE A. MORGAN
(3) EDWARD CHERNOFF
(4) JOHN J. MASTROTOTARO

In consideration of the sum of one dollar ($1.00) and other good and valuable considerations paid to each of the undersigned (the receipt of which is hereby acknowledged), the undersigned agree(s) to assign, and hereby does assign, transfer, sell and set over to

(5) Insert name of Assignee

(5) MEDTRONIC MINIMED, INC.

(6) Insert state of Incorporation of Assignee

(6) Delaware

(7) Insert address of Assignee

(7) of 18000 Devonshire Street, Northridge, CA 91325-1219 (hereinafter designated as the Assignee), its successors and assigns, the entire worldwide right, title and interest in the invention (and any and all applications and all patents which may be granted on the invention) known as

(8) Insert identification of Invention, such as Title, Case Number or Foreign Application Number

(8) **GLUCOSE SENSOR TRANSCEIVER**
for which the undersigned has (have) executed an application for patent in the United States of America as the inventor (inventors)

(9) Insert Date of Signing of Application

(9) on March 17, 19, 24, & 25, 2008

For the aforementioned consideration, the undersigned does (do) materially represent to the Assignee, its successors and assigns, that at the time of the execution of this assignment that the undersigned is (are) a lawful owner(s) of the entire right, title and interest in and to the invention and the above-identified application for patent, and that the same is unencumbered, and that the undersigned has (have) good right(s) and lawful authority to sell and convey the same in the manner set forth herein.

The undersigned further agree(s):

a) to execute all papers necessary in connection with an application in any country of the world and any extension, reissue, reexamination, continuation-in-part, continuation or divisional applications thereof and also to execute separate assignments in connection with such applications as the Assignee may deem necessary or expedient;

b) to execute all papers necessary in connection with any interference which may be declared concerning this application or extension, reissue, reexamination, continuation-in-part, continuation or divisional applications thereof and to cooperate with the Assignee in every way possible in obtaining evidence and going forward with such interference;

c) to execute all papers and documents and perform any act which may be necessary in connection with claims or provisions of the International Convention for Protection of Industrial Property or similar agreements (including the Patent Cooperation Treaty, Paris Convention, etc.) for any application filed in a foreign country claiming priority to the invention;

d) to perform all affirmative acts which may be necessary to obtain a grant of a valid United States Patent or other international application or foreign country patent to the Assignee;

e) to hereby authorize(s) and request(s) the Director of the United States Patent and Trademark Office to issue any and all Letters Patents of the United States resulting from the application or any extension, reissue, reexamination, continuation-in-part, continuation or divisional applications thereof to the Assignee, as Assignee of the entire right, title and interest in and to the same, and hereby covenants that he has (they have) full right to convey the entire interest herein assigned, and that he has (they have) full right to convey the entire interest herein assigned, and that he has (they have) not executed, any agreement in conflict herewith; and

f) to hereby appoint:

Paul H. Kovelman, Reg. No. 35,228
Richard K. Yoon, Reg. No. 42,247
Ajit S. Narang, Reg. No. 55,480

and all of the firm of Lee, Hong, Degerman, Kang & Schmadeka:

Jonathan Y. Kang, Reg. No. 38,199
Lew Edward V. Macapagal, Reg. No. 55,416
Craig W. Schmoyer, Reg. No. 51,007
Jeffrey J. Lotspeich, Reg. No. 45,737
Richard C. Salfelder, Reg. No. 51,127
F. Jason Far-hadian, Reg. No. 42,523
Vernon R. Yancy, Reg. No. 52,379

the power to insert on this assignment any further identification which may be necessary or desirable in order to comply with the rules of the United States Patent and Trademark Office for recordation of this document.

Date: 03/17/2008 Signature of Inventor (1): _____
Name of Inventor: HIMANSHU PATEL

Date: _____ Signature of Inventor (2): _____
Name of Inventor: WAYNE A. MORGAN

Date: _____ Signature of Inventor (3): _____
Name of Inventor: EDWARD CHERNOFF

Date: _____ Signature of Inventor (4): _____
Name of Inventor: JOHN J. MASTROTOTARO

d) to perform all affirmative acts which may be necessary to obtain a grant of a valid United States Patent or other international application or foreign country patent to the Assignee;

e) to hereby authorize(s) and request(s) the Director of the United States Patent and Trademark Office to issue any and all Letters Patents of the United States resulting from the application or any extension, reissue, reexamination, continuation-in-part, continuation or divisional applications thereof to the Assignee, as Assignee of the entire right, title and interest in and to the same, and hereby covenants that he has (they have) full right to convey the entire interest herein assigned, and that he has (they have) full right to convey the entire interest herein assigned, and that he has (they have) not executed, any agreement in conflict herewith; and

f) to hereby appoint:

Paul H. Kovelman, Reg. No. 35,228
Richard K. Yoon, Reg. No. 42,247
Ajit S. Narang, Reg. No. 55,480

and all of the firm of Lee, Hong, Degerman, Kang & Schmadeka:

Jonathan Y. Kang, Reg. No. 38,199
Lew Edward V. Macapagal, Reg. No. 55,416
Craig W. Schmoyer, Reg. No. 51,007
Jeffrey J. Lotspeich, Reg. No. 45,737
Richard C. Salfelder, Reg. No. 51,127
F. Jason Far-hadian, Reg. No. 42,523
Vernon R. Yancy, Reg. No. 52,379

the power to insert on this assignment any further identification which may be necessary or desirable in order to comply with the rules of the United States Patent and Trademark Office for recordation of this document.

Date: _____ Signature of Inventor (1): _____
Name of Inventor: HIMANSHU PATEL

Date: 3/19/2008 Signature of Inventor (2): Wayne A Morgan
Name of Inventor: WAYNE A. MORGAN

Date: 3/24/2008 Signature of Inventor (3): _____
Name of Inventor: EDWARD CHERNOFF

Date: 3/17/08 Signature of Inventor (4): _____
Name of Inventor: JOHN J. MASTROTOTARO

ACCEPTANCE:

The undersigned, MEDTRONIC MINIMED, INC., a Delaware corporation, hereby declares that it has accepted the foregoing assignment.

SIGNED AND SEALED this 25 day of March, 2008.

ASSIGNEE:

MEDTRONIC MINIMED, INC.,
a Delaware Corporation

By: _____

Name: Eric P. Geismar

Title: Vice President and Senior Counsel

Electronic Acknowledgement Receipt

EFS ID:	6521288
Application Number:	12056651
International Application Number:	
Confirmation Number:	9941
Title of Invention:	GLUCOSE SENSOR TRANSCEIVER
First Named Inventor/Applicant Name:	Himanshu Patel
Customer Number:	35884
Filer:	Paul H. Kovelman
Filer Authorized By:	
Attorney Docket Number:	2164-3003
Receipt Date:	24-NOV-2009
Filing Date:	27-MAR-2008
Time Stamp:	18:49:34
Application Type:	Utility under 35 USC 111(a)

Payment information:

Submitted with Payment	no

File Listing:

Document Number	Document Description	File Name	File Size(Bytes)/ Message Digest	Multi Part /.zip	Pages (if appl.)
1		P25732_US_Power_of_Attorney_with_copy_of_Assignment_NEW.pdf	312331 4e44dfe3eb68bc2b1a54fd5c15e20b330774473f	yes	9

	Multipart Description/PDF files in .zip description		
	Document Description	**Start**	**End**
	Power of Attorney	1	2
	Assignee showing of ownership per 37 CFR 3.73(b).	3	9

Warnings:

Information:

Total Files Size (in bytes):	312331

This Acknowledgement Receipt evidences receipt on the noted date by the USPTO of the indicated documents, characterized by the applicant, and including page counts, where applicable. It serves as evidence of receipt similar to a Post Card, as described in MPEP 503.

New Applications Under 35 U.S.C. 111
If a new application is being filed and the application includes the necessary components for a filing date (see 37 CFR 1.53(b)-(d) and MPEP 506), a Filing Receipt (37 CFR 1.54) will be issued in due course and the date shown on this Acknowledgement Receipt will establish the filing date of the application.

National Stage of an International Application under 35 U.S.C. 371
If a timely submission to enter the national stage of an international application is compliant with the conditions of 35 U.S.C. 371 and other applicable requirements a Form PCT/DO/EO/903 indicating acceptance of the application as a national stage submission under 35 U.S.C. 371 will be issued in addition to the Filing Receipt, in due course.

New International Application Filed with the USPTO as a Receiving Office
If a new international application is being filed and the international application includes the necessary components for an international filing date (see PCT Article 11 and MPEP 1810), a Notification of the International Application Number and of the International Filing Date (Form PCT/RO/105) will be issued in due course, subject to prescriptions concerning national security, and the date shown on this Acknowledgement Receipt will establish the international filing date of the application.

UNITED STATES PATENT AND TRADEMARK OFFICE

UNITED STATES DEPARTMENT OF COMMERCE
United States Patent and Trademark Office
Address: COMMISSIONER FOR PATENTS
P.O. Box 1450
Alexandria, Virginia 22313-1450
www.uspto.gov

APPLICATION NUMBER	FILING OR 371(C) DATE	FIRST NAMED APPLICANT	ATTY. DOCKET NO./TITLE
12/056,651	03/27/2008	Himanshu Patel	2164-3003

CONFIRMATION NO. 9941

PUBLICATION NOTICE

OC000000035297983

35884
LEE, HONG, DEGERMAN, KANG & WAIMEY
660 S. FIGUEROA STREET
Suite 2300
LOS ANGELES, CA 90017

Title:GLUCOSE SENSOR TRANSCEIVER

Publication No.US-2009-0085768-A1
Publication Date:04/02/2009

NOTICE OF PUBLICATION OF APPLICATION

The above-identified application will be electronically published as a patent application publication pursuant to 37 CFR 1.211, et seq. The patent application publication number and publication date are set forth above.

The publication may be accessed through the USPTO's publically available Searchable Databases via the Internet at www.uspto.gov. The direct link to access the publication is currently http://www.uspto.gov/patft/.

The publication process established by the Office does not provide for mailing a copy of the publication to applicant. A copy of the publication may be obtained from the Office upon payment of the appropriate fee set forth in 37 CFR 1.19(a)(1). Orders for copies of patent application publications are handled by the USPTO's Office of Public Records. The Office of Public Records can be reached by telephone at (703) 308-9726 or (800) 972-6382, by facsimile at (703) 305-8759, by mail addressed to the United States Patent and Trademark Office, Office of Public Records, Alexandria, VA 22313-1450 or via the Internet.

In addition, information on the status of the application, including the mailing date of Office actions and the dates of receipt of correspondence filed in the Office, may also be accessed via the Internet through the Patent Electronic Business Center at www.uspto.gov using the public side of the Patent Application Information and Retrieval (PAIR) system. The direct link to access this status information is currently http://pair.uspto.gov/. Prior to publication, such status information is confidential and may only be obtained by applicant using the private side of PAIR.

Further assistance in electronically accessing the publication, or about PAIR, is available by calling the Patent Electronic Business Center at 1-866-217-9197.

Office of Data Managment, Application Assistance Unit (571) 272-4000, or (571) 272-4200, or 1-888-786-0101

UNITED STATES PATENT AND TRADEMARK OFFICE

UNITED STATES DEPARTMENT OF COMMERCE
United States Patent and Trademark Office
Address: COMMISSIONER FOR PATENTS
P.O. Box 1450
Alexandria, Virginia 22313-1450
www.uspto.gov

APPLICATION NUMBER	FILING or 371(c) DATE	GRP ART UNIT	FIL FEE REC'D	ATTY.DOCKET.NO	TOT CLAIMS	IND CLAIMS
12/056,651	03/27/2008	2612	1480	2164-3003	29	1

CONFIRMATION NO. 9941

UPDATED FILING RECEIPT

35884
LEE, HONG, DEGERMAN, KANG & SCHMADEKA
660 S. FIGUEROA STREET
Suite 2300
LOS ANGELES, CA 90017

OC000000030503681

Date Mailed: 06/18/2008

Receipt is acknowledged of this non-provisional patent application. The application will be taken up for examination in due course. Applicant will be notified as to the results of the examination. Any correspondence concerning the application must include the following identification information: the U.S. APPLICATION NUMBER, FILING DATE, NAME OF APPLICANT, and TITLE OF INVENTION. Fees transmitted by check or draft are subject to collection. Please verify the accuracy of the data presented on this receipt. **If an error is noted on this Filing Receipt, please submit a written request for a Filing Receipt Correction. Please provide a copy of this Filing Receipt with the changes noted thereon. If you received a "Notice to File Missing Parts" for this application, please submit any corrections to this Filing Receipt with your reply to the Notice. When the USPTO processes the reply to the Notice, the USPTO will generate another Filing Receipt incorporating the requested corrections**

Applicant(s)

Himanshu Patel, Northridge, CA;
Wayne A. Morgan, Northridge, CA;
Edward Chernoff, Frazier Park, CA;
John J. Mastrototaro, Los Angeles, CA;

Assignment For Published Patent Application

MEDTRONIC MINIMED, INC.

Power of Attorney:

Paul Kovelman--35228
Jonathan Kang--38199
Richard Yoon--42247
Farshad Far-Hadian--42523
Jeffrey Lotspeich--45737
Craig Schmoyer--51007
Richard Salfelder--51127
Vernon Yancy--52379
Lew Edward Macapagal--55416
Ajit Narang--55480

Domestic Priority data as claimed by applicant

This appln claims benefit of 60/976,886 10/02/2007

Foreign Applications

If Required, Foreign Filing License Granted: 04/11/2008

The country code and number of your priority application, to be used for filing abroad under the Paris Convention, is **US 12/056,651**

Projected Publication Date: 04/02/2009

Non-Publication Request: No

Early Publication Request: No

Title

GLUCOSE SENSOR TRANSCEIVER

Preliminary Class

340

PROTECTING YOUR INVENTION OUTSIDE THE UNITED STATES

Since the rights granted by a U.S. patent extend only throughout the territory of the United States and have no effect in a foreign country, an inventor who wishes patent protection in another country must apply for a patent in a specific country or in regional patent offices. Applicants may wish to consider the filing of an international application under the Patent Cooperation Treaty (PCT). An international (PCT) application generally has the same effect as a regular national patent application in each PCT-member country. The PCT process **simplifies** the filing of patent applications on the same invention in member countries, but **does not result** in a grant of "an international patent" and does not eliminate the need of applicants to file additional documents and fees in countries where patent protection is desired.

Almost every country has its own patent law, and a person desiring a patent in a particular country must make an application for patent in that country in accordance with its particular laws. Since the laws of many countries differ in various respects from the patent law of the United States, applicants are advised to seek guidance from specific foreign countries to ensure that patent rights are not lost prematurely.

Applicants also are advised that in the case of inventions made in the United States, the Director of the USPTO must issue a license before applicants can apply for a patent in a foreign country. The filing of a U.S. patent application serves as a request for a foreign filing license. The application's filing receipt contains further information and guidance as to the status of applicant's license for foreign filing.

Applicants may wish to consult the USPTO booklet, "General Information Concerning Patents" (specifically, the section entitled "Treaties and Foreign Patents") for more information on timeframes and deadlines for filing foreign patent applications. The guide is available either by contacting the USPTO Contact Center at 800-786-9199, or it can be viewed on the USPTO website at http://www.uspto.gov/web/offices/pac/doc/general/index.html.

For information on preventing theft of your intellectual property (patents, trademarks and copyrights), you may wish to consult the U.S. Government website, http://www.stopfakes.gov. Part of a Department of Commerce initiative, this website includes self-help "toolkits" giving innovators guidance on how to protect intellectual property in specific countries such as China, Korea and Mexico. For questions regarding patent enforcement issues, applicants may call the U.S. Government hotline at 1-866-999-HALT (1-866-999-4158).

LICENSE FOR FOREIGN FILING UNDER

Title 35, United States Code, Section 184

Title 37, Code of Federal Regulations, 5.11 & 5.15

GRANTED

The applicant has been granted a license under 35 U.S.C. 184, if the phrase "IF REQUIRED, FOREIGN FILING LICENSE GRANTED" followed by a date appears on this form. Such licenses are issued in all applications where the conditions for issuance of a license have been met, regardless of whether or not a license may be required as

set forth in 37 CFR 5.15. The scope and limitations of this license are set forth in 37 CFR 5.15(a) unless an earlier license has been issued under 37 CFR 5.15(b). The license is subject to revocation upon written notification. The date indicated is the effective date of the license, unless an earlier license of similar scope has been granted under 37 CFR 5.13 or 5.14.

This license is to be retained by the licensee and may be used at any time on or after the effective date thereof unless it is revoked. This license is automatically transferred to any related applications(s) filed under 37 CFR 1.53(d). This license is not retroactive.

The grant of a license does not in any way lessen the responsibility of a licensee for the security of the subject matter as imposed by any Government contract or the provisions of existing laws relating to espionage and the national security or the export of technical data. Licensees should apprise themselves of current regulations especially with respect to certain countries, of other agencies, particularly the Office of Defense Trade Controls, Department of State (with respect to Arms, Munitions and Implements of War (22 CFR 121-128)); the Bureau of Industry and Security, Department of Commerce (15 CFR parts 730-774); the Office of Foreign AssetsControl, Department of Treasury (31 CFR Parts 500+) and the Department of Energy.

NOT GRANTED

No license under 35 U.S.C. 184 has been granted at this time, if the phrase "IF REQUIRED, FOREIGN FILING LICENSE GRANTED" DOES NOT appear on this form. Applicant may still petition for a license under 37 CFR 5.12, if a license is desired before the expiration of 6 months from the filing date of the application. If 6 months has lapsed from the filing date of this application and the licensee has not received any indication of a secrecy order under 35 U.S.C. 181, the licensee may foreign file the application pursuant to 37 CFR 5.15(b).

Customer No. 035884 Attorney Docket No. 2164-3003

IN THE UNITED STATES PATENT AND TRADEMARK OFFICE

In re application of: Himanshu Patel Serial No: 12/056,651 Filed: March 27, 2008 For: GLUCOSE SENSOR TRANSCEIVER	Art Unit: 2614 Examiner: Confirmation No.: 9941

TRANSMITTAL OF RESPONSE TO NOTICE TO FILE CORRECTED APPLICATION PAPERS

Mail Stop Missing Parts
Commissioner for Patents
P. O. Box 1450
Alexandria, VA 22313-1450

Dear Sir:

Enclosed herewith are Replacement Drawings for FIGS. 1, 2, 8A, 8B, and 9-13 per the Patent Office "Notice to File Corrected Application Papers" dated April 14, 2008.

Specifically, the following changes have been made: FIGS. 1, 2, 8A, 8B, and 9-13 have been amended such that portions of the figures are no longer missing and/or blurry.

The Commissioner is hereby authorized to charge any deficiency fees associated with this communication or credit any overpayment to Deposit Account No. 502290. A copy of this sheet is enclosed.

LEE, HONG, DEGERMAN, KANG & SCHMADEKA

Date: June 11, 2008

By: Lew Macapagal

Lew Edward V. Macapagal
Registration No. 55,416
Attorney for Applicant(s)

Customer No. 035884

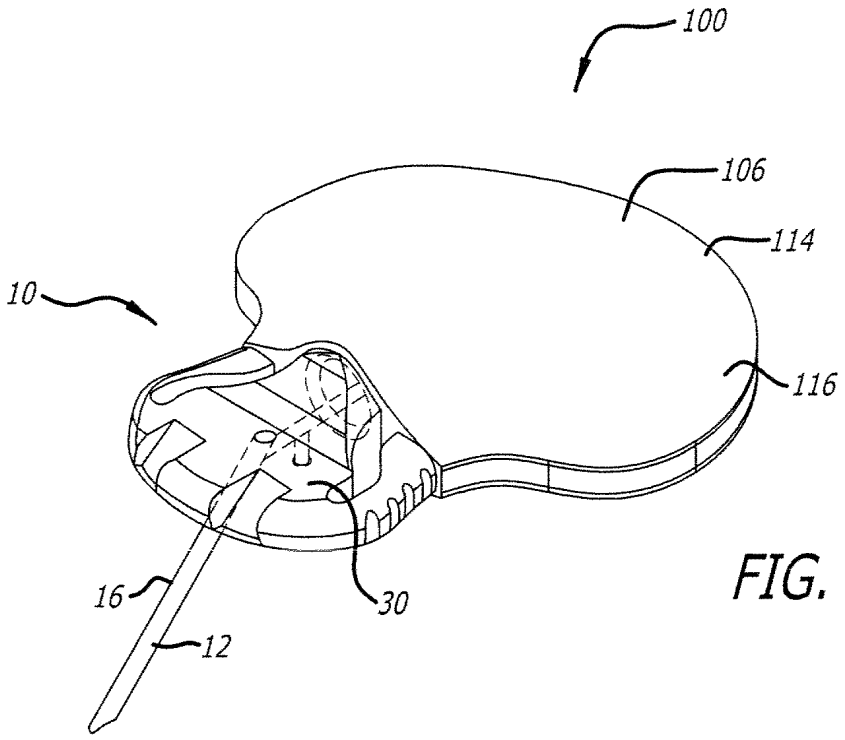
100
106
114
10
116
16
30
12

FIG. 1

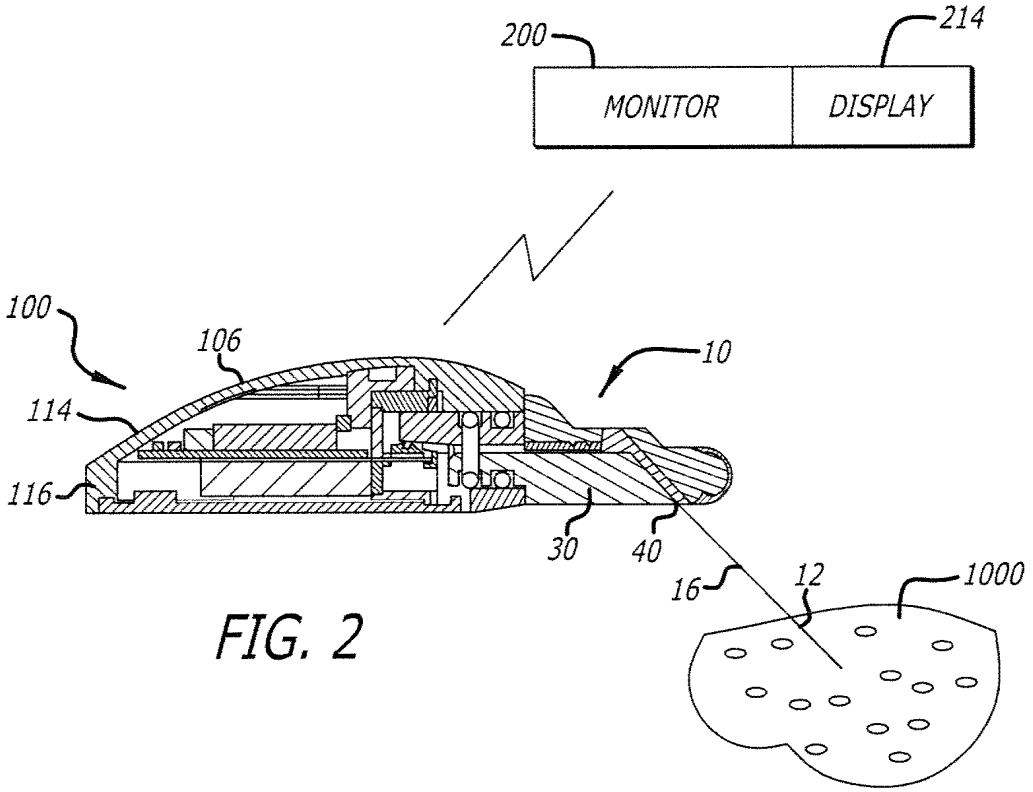
200
214
MONITOR
DISPLAY
100
106
10
114
116
30
40
16
12
1000

FIG. 2

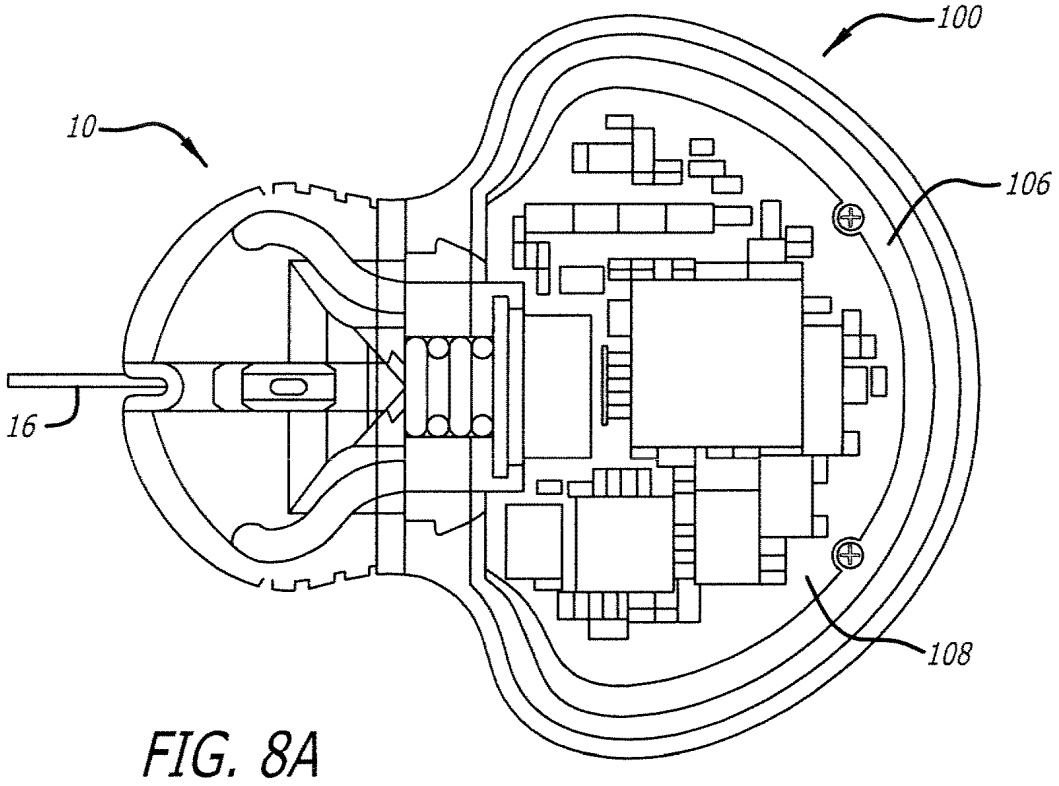
100
10
106
16
108

FIG. 8A

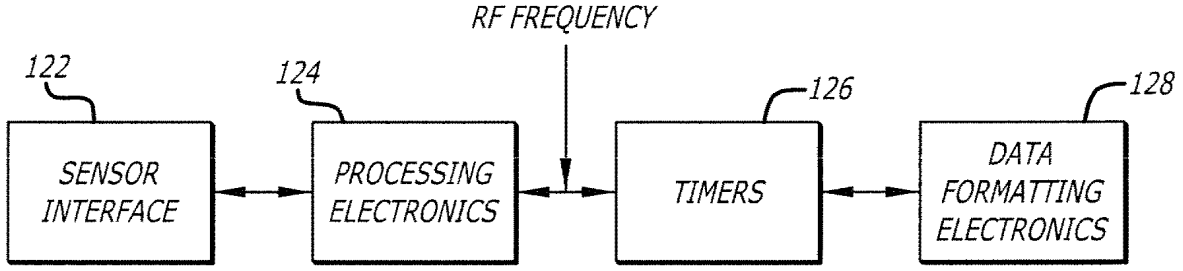
RF FREQUENCY
122
124
126
128
SENSOR INTERFACE
PROCESSING ELECTRONICS
TIMERS
DATA FORMATTING ELECTRONICS

FIG. 8B

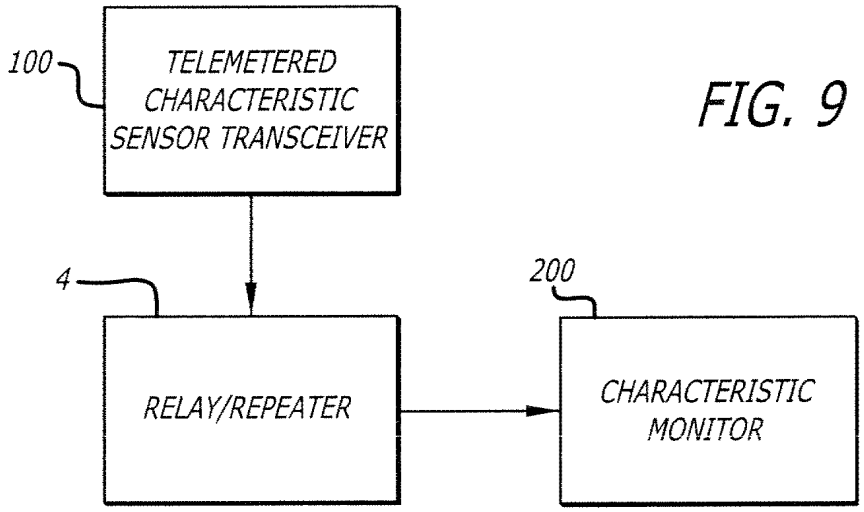
100
TELEMETERED CHARACTERISTIC SENSOR TRANSCEIVER
4
RELAY/REPEATER
200
CHARACTERISTIC MONITOR

FIG. 9

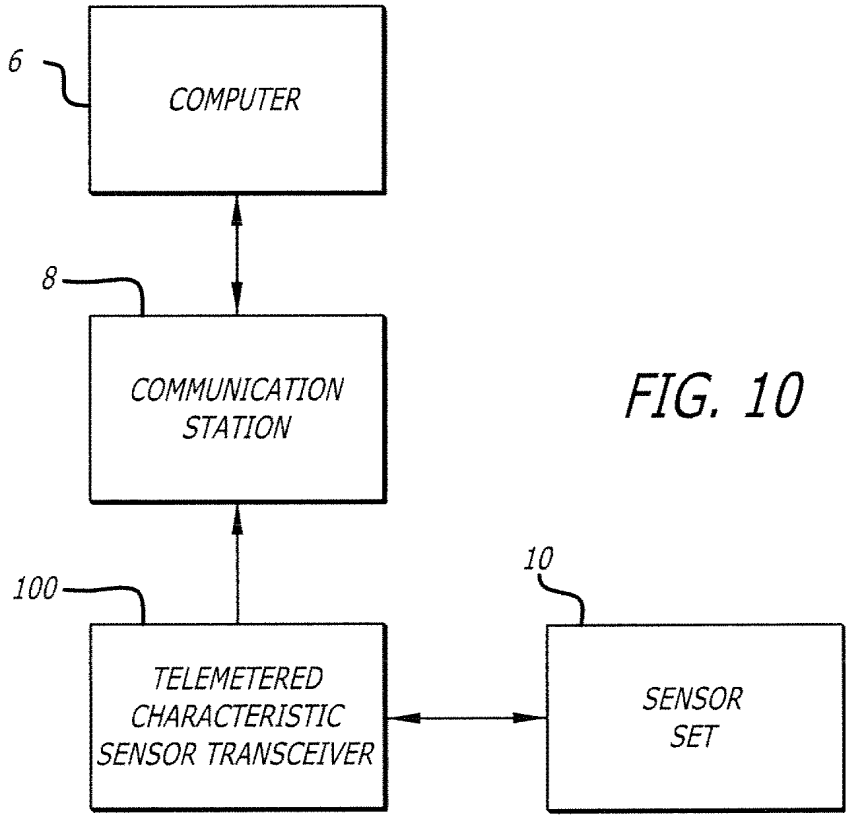
6
COMPUTER
8
COMMUNICATION STATION
100
TELEMETERED CHARACTERISTIC SENSOR TRANSCEIVER
10
SENSOR SET

FIG. 10

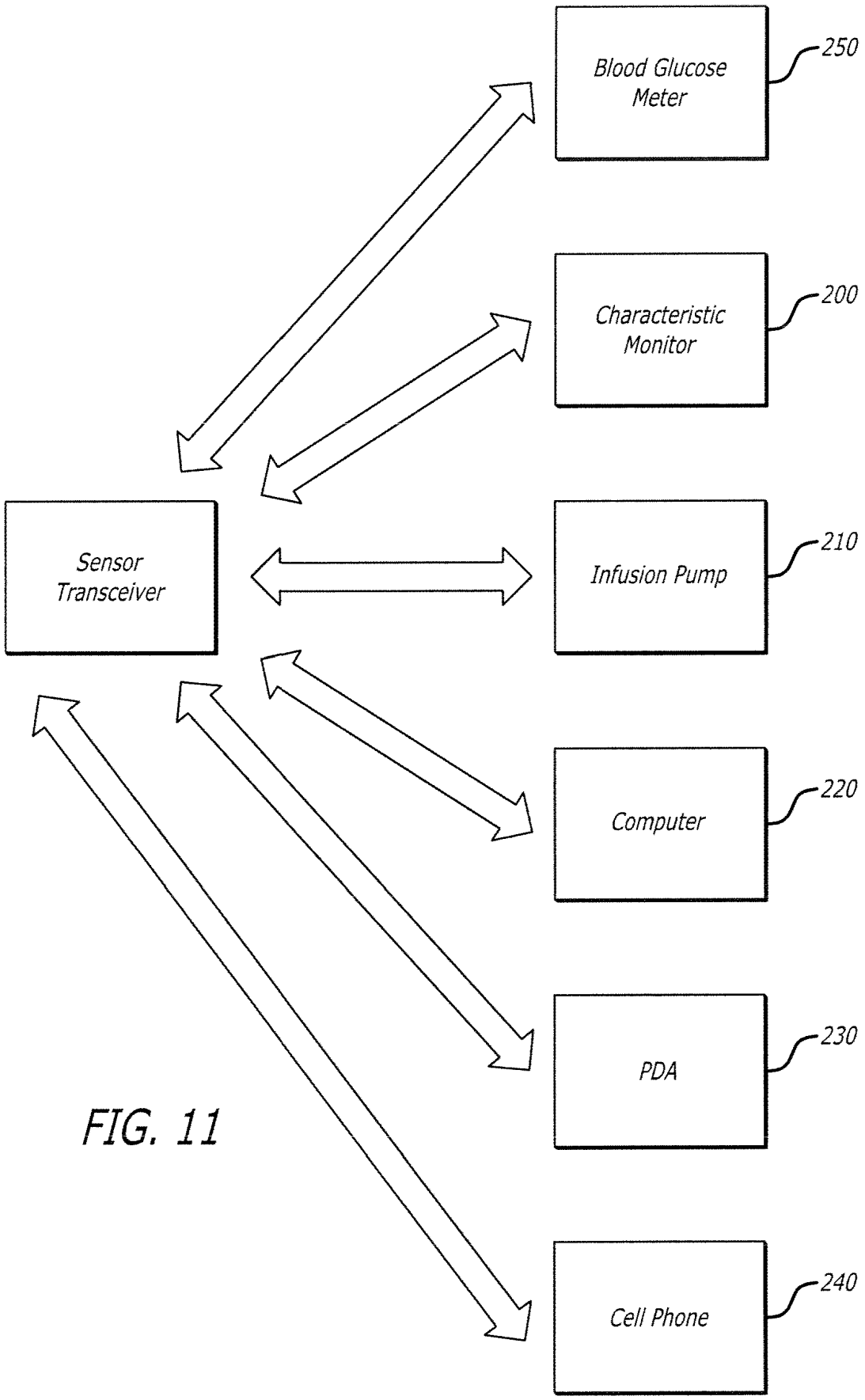
Blood Glucose Meter
250
Characteristic Monitor
200
Sensor Transceiver
Infusion Pump
210
Computer
220
PDA
230
Cell Phone
240

FIG. 11

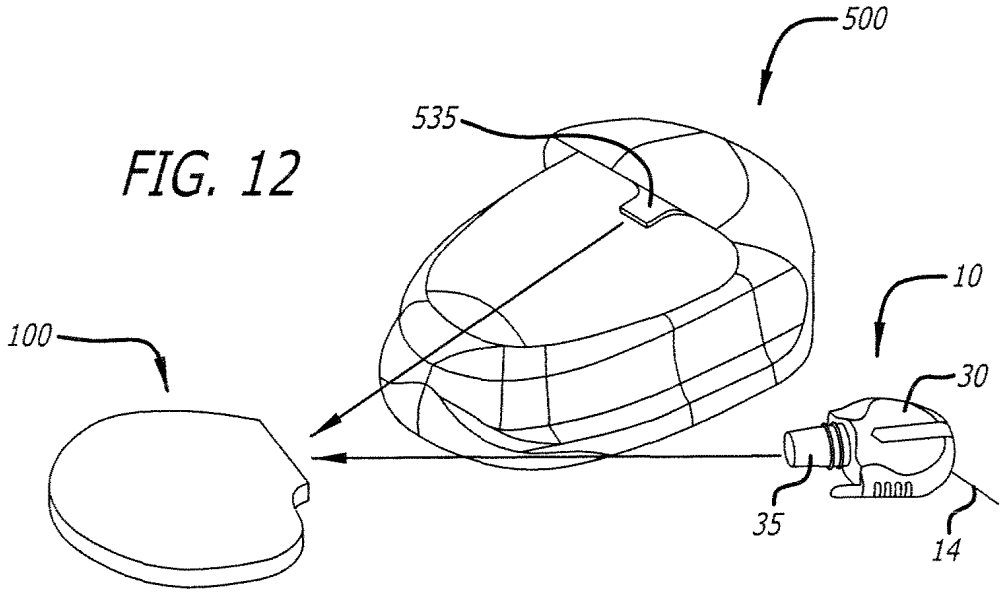

FIG. 12

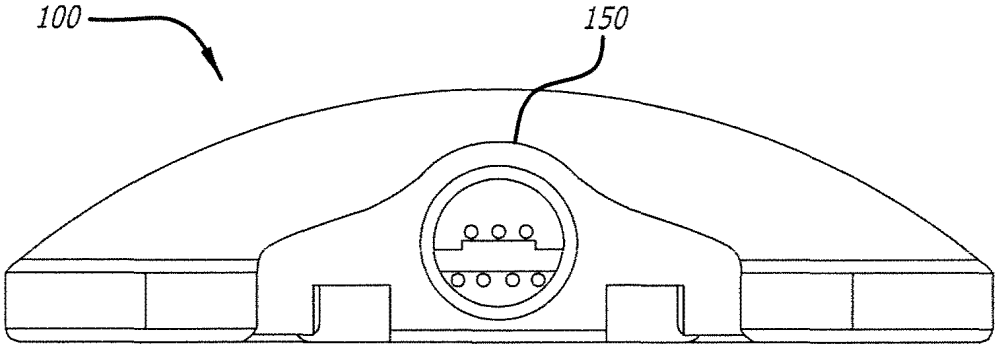

FIG. 13

Electronic Acknowledgement Receipt

EFS ID:	3441599
Application Number:	12056651
International Application Number:	
Confirmation Number:	9941
Title of Invention:	GLUCOSE SENSOR TRANSCEIVER
First Named Inventor/Applicant Name:	Himanshu Patel
Customer Number:	35884
Filer:	Lew Edward V. Macapagal/Andrea Costello
Filer Authorized By:	Lew Edward V. Macapagal
Attorney Docket Number:	2164-3003
Receipt Date:	11-JUN-2008
Filing Date:	27-MAR-2008
Time Stamp:	18:21:59
Application Type:	Utility under 35 USC 111(a)

Payment information:

Submitted with Payment	no

File Listing:

Document Number	Document Description	File Name	File Size(Bytes) /Message Digest	Multi Part /.zip	Pages (if appl.)
1		Transmittal-Correct-App-Papers-Drawings-2164-3003.pdf	160271 e0784f5c8a418254500096e23906a2b84028b55c	yes	6

	Multipart Description/PDF files in .zip description		
	Document Description	**Start**	**End**
	Applicant Response to Pre-Exam Formalities Notice	1	1
	Drawings-only black and white line drawings	2	6

Warnings:	
Information:	
Total Files Size (in bytes):	160271

This Acknowledgement Receipt evidences receipt on the noted date by the USPTO of the indicated documents, characterized by the applicant, and including page counts, where applicable. It serves as evidence of receipt similar to a Post Card, as described in MPEP 503.

New Applications Under 35 U.S.C. 111
If a new application is being filed and the application includes the necessary components for a filing date (see 37 CFR 1.53(b)-(d) and MPEP 506), a Filing Receipt (37 CFR 1.54) will be issued in due course and the date shown on this Acknowledgement Receipt will establish the filing date of the application.

National Stage of an International Application under 35 U.S.C. 371
If a timely submission to enter the national stage of an international application is compliant with the conditions of 35 U.S.C. 371 and other applicable requirements a Form PCT/DO/EO/903 indicating acceptance of the application as a national stage submission under 35 U.S.C. 371 will be issued in addition to the Filing Receipt, in due course.

New International Application Filed with the USPTO as a Receiving Office
If a new international application is being filed and the international application includes the necessary components for an international filing date (see PCT Article 11 and MPEP 1810), a Notification of the International Application Number and of the International Filing Date (Form PCT/RO/105) will be issued in due course, subject to prescriptions concerning national security, and the date shown on this Acknowledgement Receipt will establish the international filing date of the application.

UNITED STATES PATENT AND TRADEMARK OFFICE

UNITED STATES DEPARTMENT OF COMMERCE
United States Patent and Trademark Office
Address: COMMISSIONER FOR PATENTS
P.O. Box 1450
Alexandria, Virginia 22313-1450
www.uspto.gov

APPLICATION NUMBER	FILING OR 371(C) DATE	FIRST NAMED APPLICANT	ATTY. DOCKET NO./TITLE
12/056,651	03/27/2008	Himanshu Patel	2164-3003

CONFIRMATION NO. 9941

FORMALITIES LETTER

35884
LEE, HONG, DEGERMAN, KANG & SCHMADEKA
660 S. FIGUEROA STREET
Suite 2300
LOS ANGELES, CA 90017

OC000000029367328

Date Mailed: 04/14/2008

NOTICE TO FILE CORRECTED APPLICATION PAPERS

Filing Date Granted

An application number and filing date have been accorded to this application. The application is informal since it does not comply with the regulations for the reason(s) indicated below. Applicant is given TWO MONTHS from the date of this Notice within which to correct the informalities indicated below. Extensions of time may be obtained by filing a petition accompanied by the extension fee under the provisions of 37 CFR 1.136(a).

The required item(s) identified below must be timely submitted to avoid abandonment:

- Replacement drawings in compliance with 37 CFR 1.84 and 37 CFR 1.121(d) are required. The drawings submitted are not acceptable because:
  - The drawings submitted to the Office are not electronically reproducible because portions of figures 2,8a,12 are missing and/or blurry.

Applicant is cautioned that correction of the above items may cause the specification and drawings page count to exceed 100 pages. If the specification and drawings exceed 100 pages, applicant will need to submit the required application size fee.

Replies should be mailed to:

Mail Stop Missing Parts
Commissioner for Patents
P.O. Box 1450
Alexandria VA 22313-1450

Registered users of EFS-Web may alternatively submit their reply to this notice via EFS-Web.
https://sportal.uspto.gov/authenticate/AuthenticateUserLocalEPF.html

For more information about EFS-Web please call the USPTO Electronic Business Center at **1-866-217-9197** or visit our website at http://www.uspto.gov/ebc.

If you are not using EFS-Web to submit your reply, you must include a copy of this notice.

/etadesse/

Office of Data Management, Application Assistance Unit (571) 272-4000, or (571) 272-4200, or 1-888-786-0101

UNITED STATES PATENT AND TRADEMARK OFFICE

UNITED STATES DEPARTMENT OF COMMERCE
United States Patent and Trademark Office
Address: COMMISSIONER FOR PATENTS
P.O. Box 1450
Alexandria, Virginia 22313-1450
www.uspto.gov

APPLICATION NUMBER	FILING or 371(c) DATE	GRP ART UNIT	FIL FEE REC'D	ATTY.DOCKET.NO	TOT CLAIMS	IND CLAIMS
12/056,651	03/27/2008	2612	1480	2164-3003	29	1

CONFIRMATION NO. 9941

35884
LEE, HONG, DEGERMAN, KANG & SCHMADEKA
660 S. FIGUEROA STREET
Suite 2300
LOS ANGELES, CA 90017

FILING RECEIPT

OC000000029367327

Date Mailed: 04/14/2008

Receipt is acknowledged of this non-provisional patent application. The application will be taken up for examination in due course. Applicant will be notified as to the results of the examination. Any correspondence concerning the application must include the following identification information: the U.S. APPLICATION NUMBER, FILING DATE, NAME OF APPLICANT, and TITLE OF INVENTION. Fees transmitted by check or draft are subject to collection. Please verify the accuracy of the data presented on this receipt. **If an error is noted on this Filing Receipt, please write to the Office of Initial Patent Examination's Filing Receipt Corrections. Please provide a copy of this Filing Receipt with the changes noted thereon. If you received a "Notice to File Missing Parts" for this application, please submit any corrections to this Filing Receipt with your reply to the Notice. When the USPTO processes the reply to the Notice, the USPTO will generate another Filing Receipt incorporating the requested corrections**

Applicant(s)

Himanshu Patel, Northridge, CA;
Wayne A. Morgan, Northridge, CA;
Edward Chernoff, Frazier Park, CA;
John J. Mastrototaro, Los Angeles, CA;

Assignment For Published Patent Application

MEDTRONIC MINIMED, INC.

Power of Attorney:

Paul Kovelman--35228
Jonathan Kang--38199
Richard Yoon--42247
Farshad Far-Hadian--42523
Jeffrey Lotspeich--45737
Craig Schmoyer--51007
Richard Salfelder--51127
Vernon Yancy--52379
Lew Edward Macapagal--55416
Ajit Narang--55480

Domestic Priority data as claimed by applicant

This appln claims benefit of 60/976,886 10/02/2007

Foreign Applications

If Required, Foreign Filing License Granted: 04/11/2008

The country code and number of your priority application, to be used for filing abroad under the Paris Convention, is **US 12/056,651**

Projected Publication Date: To Be Determined - pending completion of Corrected Papers

Non-Publication Request: No

Early Publication Request: No
Title

GLUCOSE SENSOR TRANSCEIVER

Preliminary Class

340

PROTECTING YOUR INVENTION OUTSIDE THE UNITED STATES

Since the rights granted by a U.S. patent extend only throughout the territory of the United States and have no effect in a foreign country, an inventor who wishes patent protection in another country must apply for a patent in a specific country or in regional patent offices. Applicants may wish to consider the filing of an international application under the Patent Cooperation Treaty (PCT). An international (PCT) application generally has the same effect as a regular national patent application in each PCT-member country. The PCT process **simplifies** the filing of patent applications on the same invention in member countries, but **does not result** in a grant of "an international patent" and does not eliminate the need of applicants to file additional documents and fees in countries where patent protection is desired.

Almost every country has its own patent law, and a person desiring a patent in a particular country must make an application for patent in that country in accordance with its particular laws. Since the laws of many countries differ in various respects from the patent law of the United States, applicants are advised to seek guidance from specific foreign countries to ensure that patent rights are not lost prematurely.

Applicants also are advised that in the case of inventions made in the United States, the Director of the USPTO must issue a license before applicants can apply for a patent in a foreign country. The filing of a U.S. patent application serves as a request for a foreign filing license. The application's filing receipt contains further information and guidance as to the status of applicant's license for foreign filing.

Applicants may wish to consult the USPTO booklet, "General Information Concerning Patents" (specifically, the section entitled "Treaties and Foreign Patents") for more information on timeframes and deadlines for filing foreign patent applications. The guide is available either by contacting the USPTO Contact Center at 800-786-9199, or it can be viewed on the USPTO website at http://www.uspto.gov/web/offices/pac/doc/general/index.html.

For information on preventing theft of your intellectual property (patents, trademarks and copyrights), you may wish to consult the U.S. Government website, http://www.stopfakes.gov. Part of a Department of Commerce initiative, this website includes self-help "toolkits" giving innovators guidance on how to protect intellectual property in specific countries such as China, Korea and Mexico. For questions regarding patent enforcement issues, applicants may call the U.S. Government hotline at 1-866-999-HALT (1-866-999-4158).

LICENSE FOR FOREIGN FILING UNDER

Title 35, United States Code, Section 184

Title 37, Code of Federal Regulations, 5.11 & 5.15

GRANTED

The applicant has been granted a license under 35 U.S.C. 184, if the phrase "IF REQUIRED, FOREIGN FILING LICENSE GRANTED" followed by a date appears on this form. Such licenses are issued in all applications where

the conditions for issuance of a license have been met, regardless of whether or not a license may be required as set forth in 37 CFR 5.15. The scope and limitations of this license are set forth in 37 CFR 5.15(a) unless an earlier license has been issued under 37 CFR 5.15(b). The license is subject to revocation upon written notification. The date indicated is the effective date of the license, unless an earlier license of similar scope has been granted under 37 CFR 5.13 or 5.14.

This license is to be retained by the licensee and may be used at any time on or after the effective date thereof unless it is revoked. This license is automatically transferred to any related applications(s) filed under 37 CFR 1.53(d). This license is not retroactive.

The grant of a license does not in any way lessen the responsibility of a licensee for the security of the subject matter as imposed by any Government contract or the provisions of existing laws relating to espionage and the national security or the export of technical data. Licensees should apprise themselves of current regulations especially with respect to certain countries, of other agencies, particularly the Office of Defense Trade Controls, Department of State (with respect to Arms, Munitions and Implements of War (22 CFR 121-128)); the Bureau of Industry and Security, Department of Commerce (15 CFR parts 730-774); the Office of Foreign AssetsControl, Department of Treasury (31 CFR Parts 500+) and the Department of Energy.

NOT GRANTED

No license under 35 U.S.C. 184 has been granted at this time, if the phrase "IF REQUIRED, FOREIGN FILING LICENSE GRANTED" DOES NOT appear on this form. Applicant may still petition for a license under 37 CFR 5.12, if a license is desired before the expiration of 6 months from the filing date of the application. If 6 months has lapsed from the filing date of this application and the licensee has not received any indication of a secrecy order under 35 U.S.C. 181, the licensee may foreign file the application pursuant to 37 CFR 5.15(b).

IN THE UNITED STATES PATENT AND TRADEMARK OFFICE

In re application of: Himanshu Patel, Wayne A. Morgan, Edward Chernoff, and John J. Mastrototaro	Art Unit:
	Examiner:
Serial No:	
Filed: Herewith	Confirmation No.:
For: GLUCOSE SENSOR TRANSCEIVER	

Commissioner for Patents
P.O. Box 1450
Alexandria, VA 22313-1450

Dear Sir:

Transmitted herewith for filing is the patent application identified above.

☒ 32 pages of specification and 1 page of the ABSTRACT of the invention are enclosed.

☒ 7 sheets of drawings (☒ formal ☐ informal) are enclosed.

☒ An assignment of the invention to MEDTRONIC MINIMED, INC. ☐ is enclosed ☒ will follow.

☒ Declaration and Power of Attorney ☒ is enclosed ☐ will follow.

CALCULATION OF FEES								
ITEM		TOTAL NO. OF CLAIMS		NO. OF CLAIMS OVER BASE	LG/SM $ ENTITY FEE		$ AMOUNT	$ FEE
A	TOTAL CLAIMS FEE	29	-20	9	LG=$50 SM=$25	$ 50	$450	$450
B	INDEPENDENT CLAIMS FEE*	1	-3	0	LG=$200 SM=$100	$ 200	$ 0	$ 0
C	SUBTOTAL - ADDITIONAL CLAIMS FEE (ADD FINAL COLUMN IN LINES A + B)							$ 450
D	MULTIPLE-DEPENDENT CLAIMS FEE				LARGE ENTITY FEE = $360 SMALL ENTITY FEE = $180			$ 0
E	BASIC FILING FEE				LARGE ENTITY FEE = $310 SMALL ENTITY FEE = $150			$ 310
F	SEARCH FEE				LARGE ENTITY FEE = $510 SMALL ENTITY FEE = $250			$ 510
G	EXAMINATION FEE				LARGE ENTITY FEE = $210 SMALL ENTITY FEE = $100			$ 210
H	APPLICATION SIZE FEE (If the specification and drawings exceed 100 sheets of paper, for each additional 50 sheets or fraction thereof.)				LARGE ENTITY FEE = $250 SMALL ENTITY FEE = $125			$ 0
I	TOTAL FILING FEE (ADD TOTALS FOR LINES C, D, E, F, G AND H)							$1,480
J	ASSIGNMENT RECORDING FEE						$ 40	$ 0
	*LIST INDEPENDENT CLAIMS 1							

☒ The Commissioner is hereby authorized to charge the filing fee and any deficiency for the following fees associated with this communication or credit any overpayment to **Deposit Account No. 502290**. A copy of this sheet is enclosed.

☒ The amount of $1,480 to cover the total filing fee.

☒ Any additional filing fees required under 37 C.F.R. § 1.16

☒ Any patent application processing fees under 37 C.F.R. § 1.17

Respectfully submitted,

Lee, Hong, Degerman, Kang & Schmadeka

Date: March 27, 2008

By: _____

Lew Edward V. Macapagal
Registration No. 55,416
Attorney for Applicant

Customer No. 35884

TITLE

Glucose Sensor Transceiver

CROSS-REFERENCE TO RELATED APPLICATION

[0001] This application claims the benefit of earlier filing date and right of priority to U.S. Provisional Application Serial No. 60/976,886 filed October 2, 2007, the contents of which are hereby incorporated by reference.

FIELD

[0002] The present invention relates to telemetered subcutaneous sensor devices and, more particularly, to devices for wireless communication between an implantable subcutaneous sensor set at a selected insertion site within the body of a user and at least one of a plurality of remotely located therapy-related devices.

BACKGROUND

[0003] Diabetes mellitus is the most common of endocrine disorders, and is characterized by inadequate insulin action. Diabetes mellitus has two principal variants, known as Type 1 diabetes and Type 2 diabetes. The latter is also referred to as DM/II (diabetes mellitus type 2), adult-onset diabetes, maturity-onset diabetes, or NIDDM (non-insulin dependent diabetes mellitus).

[0004] Over the years, body characteristics have been determined by obtaining a sample of bodily fluid. For example, diabetics often test for blood glucose levels. Traditional blood glucose determinations have utilized a finger prick method using a lancet to withdraw a small blood sample. These systems are designed to provide data at discrete points but do not provide continuous data to show variations in the characteristic between testing times. These discrete measurements are capable of informing a patient the state of his blood glucose values at a point

in time. Thus, the patient has enough information to administer "correction" amounts of insulin to reduce his current blood glucose reading at one point in time. However, these discrete readings are not able to provide enough information for any type of automatic or semi-automatic system of administering insulin based on blood glucose values. Moreover, discrete blood glucose readings only give a limited understanding of one's blood glucose values over time, and thus may not give a patient a complete picture of how his/her blood glucose values vary between discrete measurements.

[0005] Recently, a variety of implantable electrochemical sensors have been developed for detecting and/or quantifying specific agents or compositions in a patient's blood or interstitial fluid. For instance, glucose sensors are being developed for use in obtaining an indication of blood glucose levels in a diabetic patient. These glucose sensors connected (wired or wirelessly) to a blood glucose monitor can provide continuous glucose readings over a period of time, such as 3 to 5 days. Such readings are useful in monitoring and/or adjusting a treatment regimen which typically includes the regular administration of insulin to the patient.

[0006] Thus, continuous blood glucose readings improve medical therapies with medication infusion pumps of the external type, as generally described in U.S. Patent Nos. 4,562,751; 4,678,408; and 4,685,903; or implantable medication infusion pumps, as generally described in U.S. Patent No. 4,573,994, which are herein incorporated by reference. Typical thin film sensors used in these continuous blood glucose monitors are described in commonly assigned U.S. Patent Nos. 5,390,671; 5,391,250; 5,482,473; and 5,586,553 which are incorporated by reference herein. See also U.S. Patent No. 5,299,571. In addition, characteristic glucose monitors used to provide continuous glucose data are described in commonly assigned U.S. Patent Application No. 11/322,568 entitled "Telemetered Characteristic Monitor System and Method of Using the Same" filed on December 30, 2005, which is herein incorporated by reference in its entirety. In addition, infusion pumps receiving sensor data are described in commonly assigned U.S. Patent Application No. 10/867,529 entitled "System for Providing Blood Glucose Measurements to an Infusion Device" filed on October 14, 2004, which is herein incorporated by reference in its entirety.

[0007] However, drawbacks associated with a prior glucose sensor system are that a sensor transmitter is only capable of one-way communication and has limited processing power. Hence, the sensor transmitter can only transmit raw sensor data and not calculate sensor blood glucose values itself. Accordingly, in the prior glucose sensor system, it is necessary to couple the sensor transmitter to a specially programmed remote data receiving device, such as a characteristic monitor, to determine actual glucose sensor readings. Therefore, what is needed is a sensor transceiver for use with a blood glucose sensor that is capable of transmitting and receiving therapy-related data and independently calculating sensor blood glucose values.

SUMMARY

[0008] The present invention relates to a telemetered characteristic sensor transceiver for exchanging data with at least one remote device. The transceiver comprising a housing detachably coupled to a sensor located on a body of a user , the sensor producing a signal indicative of a user characteristic, a processor formed within the housing and in communication with the sensor for processing the signal produced by the sensor, a transmitter coupled to the processor for transmitting data to at least one remote device, a receiver coupled to the processor for receiving data from the at least one remote device, and a memory coupled to the processor for storing data. Preferably, the processor performs calculations using at least one of the signal produced by the sensor, the data received from the at least one remote device and the data stored in the memory, and performs at least one of storing the calculations in the memory and transmitting the calculations to the at least one remote device through the transmitter.

[0009] In accordance with an embodiment of the present invention, the transceiver exchanges data with a plurality of remote devices in a network structure. In one aspect, the transceiver exchanges data with the at least one remote device in a synchronous manner.

[0010] In accordance with another embodiment, the transceiver wakes up from a sleep mode prior to exchanging data with the at least one remote device, wherein the at least one remote

device wakes up the transceiver. As such, the transceiver further comprises an ultrasonic sensor for receiving an ultrasonic signal from the at least one remote device when the at least one remote device transmits the ultrasonic signal to the transceiver to wake up the transceiver. Alternatively, the transceiver periodically wakes up independent of the at least one remote device.

[0011] In another aspect of the invention, the transceiver exchanges data with the at least one remote device in an asynchronous manner. Preferably, the data exchanged in the asynchronous manner comprises at least one of a blood glucose value and a request for glucose history data.

[0012] In accordance with an embodiment of the present invention, the data exchanged between the transceiver and the at least one remote device comprises at least one of device configuration data, communication link configuration data, adaptive communication configuration data, glucose history data, and calibration data. Preferably, the device configuration data comprises at least one of a device identification, user information, and time information. Preferably, the communication link configuration data comprises at least one of a communication rate, frequency information, and frequency hopping configuration information. Preferably, the glucose history data is exchanged according to a time interval. Preferably, the calibration data comprises at least one of sensor initialization sequence and configuration information, and dynamic sensor initialization parameters.

[0013] In accordance with another embodiment of the present invention, the processor calculates sensor glucose values using at least one of the signal received from the sensor, the data received from the at least one remote device and the data stored in the memory. Preferably, a rate of exchanging data between the transceiver and the at least one remote device is dynamically changed depending on a characteristic of the calculated sensor glucose values. Preferably, a glucose calculation algorithm for calculating the sensor glucose values is stored in the memory. Preferably, the processor stores the calculated sensor glucose values in the memory or transmits the calculated sensor glucose values to the at least one remote device through the transmitter. Preferably, the calculated sensor glucose values are secured via an encryption scheme before transmission to the at least one remote device.

[0014] In accordance with another embodiment of the present invention, the receiver receives calibration data from the at least one remote device and the processor stores the received calibration data in the memory. Preferably, the processor performs a calibration using at least one of the calibration data stored in the memory, the signal received from the sensor and the calculated glucose sensor values. Preferably, a calibration algorithm for performing the calibration is stored in the memory.

[0015] In one aspect of the invention, transceiver comprises a display for displaying information processed by the processor. In another aspect, the transceiver comprises means for notifying the user that the at least one remote device is beyond a certain distance from the transceiver.

[0016] In a further aspect of the invention, a power for exchanging data between the transceiver and the at least one remote device is dynamically changed depending on a strength of a detected signal between the transceiver and the at least one remote device.

[0017] In another aspect of the invention, a rate of exchanging data between the transceiver and the at least one remote device is dynamically changed depending on a power mode of at least one of the transceiver and the at least one remote device.

[0018] In accordance with the present invention, the housing is capable of detaching from the sensor and attaching to the at least one remote device. Preferably, the processor communicates with the sensor via wireless means.

[0019] In yet a further aspect of the invention, the housing comprises a single communication port for facilitating at least two of communication between the transceiver and the sensor, communication between the transceiver and the at least one remote device, and an electrical connection between the transceiver and a battery charger.

[0020] Other features and advantages of the invention will become apparent from the following detailed description, taken in conjunction with the accompanying drawings which illustrate, by way of example, various features of embodiments of the invention.

BRIEF DESCRIPTION OF THE DRAWINGS

[0021] A detailed description of embodiments of the invention will be made with reference to the accompanying drawings, wherein like numerals designate corresponding parts in the several figures.

[0022] FIG. 1 is a perspective view illustrating a subcutaneous sensor insertion set and telemetered characteristic sensor transceiver device embodying the novel features of the invention.

[0023] FIG. 2 is a longitudinal vertical section of the subcutaneous sensor insertion set and telemetered characteristic sensor transceiver of FIG. 1.

[0024] FIG. 3 is an enlarged longitudinal sectional of a slotted insertion needle used in the insertion set of FIGS. 1 and 2.

[0025] FIG. 4 is an enlarged transverse section taken generally on the line 4--4 of FIG. 3.

[0026] FIG. 5 is an enlarged transverse section taken generally on the line 5--5 of FIG. 3.

[0027] FIG. 6 is an enlarged fragmented sectional view of a needle inserted into a body in accordance with one embodiment of the present invention.

[0028] FIG. 7 is an enlarged transverse section of a needle inserted into a body in accordance with one embodiment of the present invention.

[0029] FIG. 8A is a top plan and partial cut-away view of the telemetered characteristic sensor transceiver in accordance with the embodiment shown in FIG. 1.

[0030] FIG. 8B is a simplified block diagram of a printed circuit board of the telemetered characteristic sensor transceiver in accordance with the embodiments shown in FIG. 1.

[0031] FIGS. 8C and 8D are top and bottom plan and partial cut-away views of the telemetered characteristic sensor transmitter device in accordance with the embodiment shown in FIG. 1.

[0032] FIG. 9 is a simplified block diagram of a telemetered characteristic sensor transceiver and sensor set system in accordance with another embodiment of the present invention.

[0033] FIG. 10 is a simplified block diagram of a telemetered characteristic sensor transceiver and characteristic monitor system in accordance with still another embodiment of the present invention.

[0034] FIG. 11 is a block diagram of a telemetered characteristic sensor transceiver communicating with a variety of remote electronic devices in a network structure in accordance with another embodiment of the present invention.

[0035] FIG. 12 illustrates a telemetered characteristic sensor transceiver capable of connecting to various devices in accordance with one embodiment of the present invention.

[0036] FIG. 13 illustrates a communication port of a telemetered characteristic sensor transceiver capable of connecting to various devices in accordance with one embodiment of the present invention.

DETAILED DESCRIPTION

[0037] As shown in the drawings for purposes of illustration, the invention is embodied in a telemetered characteristic sensor transceiver coupled to a sensor set, that may be implanted in and/or through subcutaneous, dermal, sub-dermal, inter-peritoneal or peritoneal tissue, that not only transmits data from the sensor set to a remote therapy-related device, such as a characteristic monitor for determining body characteristics, but may also receive data from the remote device. Although the telemetered characteristic sensor transceiver of the present invention is described below with regard to a characteristic monitor in particular, the transceiver need not operate with such a device alone. The present invention contemplates the transceiver operating with other remote electronic devices, such as infusion pumps, monitors, personal computers and hospital system devices, for example. Moreover, the transceiver may be linked to a single electronic device or numerous devices in a network structure.

[0038] In preferred embodiments of the present invention, the sensor set and monitor are for determining glucose levels in the blood and/or body fluids of the user without the use of, or necessity of, a wire or cable connection between the transceiver and the monitor. However, it will be recognized that further embodiments of the invention may use a wired connection or be used to determine the levels of other agents, characteristics or compositions, such as hormones, cholesterol, medication concentrations, pH, oxygen saturation, viral loads (e.g., HIV), or the like.

[0039] In other embodiments, the sensor set may also include the capability to be programmed or calibrated using data received and stored by the telemetered characteristic sensor transceiver, or may be calibrated at the monitor (or receiver). The telemetered characteristic sensor system is primarily adapted for use in subcutaneous human tissue. However, still further embodiments may be placed in other types of tissue, such as muscle, lymph, organ tissue, veins, arteries or the like, and used in animal tissue. Embodiments may provide sensor values to and/or receive therapy-related information from a remote device on an intermittent or continuous basis.

[0040] FIG. 1 is a perspective view illustrating a subcutaneous sensor insertion set and telemetered characteristic sensor transceiver device embodying the novel features of the

invention. FIG. 2 is an enlarged longitudinal vertical section of FIG. 1. Referring to FIGS. 1 and 2, a telemetered characteristic sensor system, in accordance with a preferred embodiment of the present invention includes a percutaneous sensor set 10, a telemetered characteristic sensor transceiver device 100 and a characteristic monitor 200. Description of the telemetered characteristic sensor is further found in commonly owned co-pending application number 11/322,568 entitled "Telemetered Characteristic Monitor System and Method of Using the Same" filed on December 30, 2005, which is incorporated by reference in its entirety. Preferably, the telemetered characteristic sensor system provides for better treatment and glycemic control in an outpatient or home-use environment. For example, the sensor system can provide indications of glucose levels, hypoglycemia/hyperglycemia alerts and outpatient diagnostics. It is also useful as an evaluation tool under a physician's supervision or use in a hospital environment to monitor a patient's health status.

[0041] The percutaneous sensor set 10 utilizes an electrode-type sensor, as described in more detail below. However, in alternative embodiments, the system may use other types of sensors, such as chemical based, optical based or the like. In further alternative embodiments, the sensors may be of a type that is used on the external surface of the skin or placed below the skin layer of the user. Preferred embodiments of a surface mounted sensor would utilize interstitial fluid harvested from underneath the skin.

[0042] The telemetered characteristic sensor transceiver 100 generally includes the capability to transmit and receive data. For example, in a preferred embodiment, the sensor transmitter 100 will receive a calibration value (e.g. from a blood glucose meter, etc.), convert raw sensor signals into calibrated processed glucose values using algorithms stored in the sensor transceiver 100 and then transmit the calibrated glucose values to a third device which has a display to show the calibrated glucose values (e.g. a characteristic monitor 200). The description of the telemetered characteristic sensor transceiver 100 will be covered in depth below.

[0043] In alternative embodiments, the characteristic monitor 200 may be replaced with a data receiver, storage and/or transmitting device for later processing of the transmitted data or programming of the telemetered characteristic sensor transceiver 100. In other embodiments, the characteristic monitor 200 is a bed-side monitor for monitoring body characteristics of a patient.

In further embodiments, the telemetered characteristic sensor transceiver 100 can maintain multiple two-way communication links with other devices, such as infusion pumps, monitors, personal computers and hospital system devices, for example.

[0044] In addition, referring to FIG. 9, a relay or repeater 4 may be used with the telemetered characteristic sensor transceiver 100 and the characteristic monitor 200 to increase the distance that the telemetered characteristic sensor transceiver 100 can be used with the characteristic monitor 200. For example, the relay 4 could be used to provide information to parents of children using the telemetered characteristic sensor transceiver 100 and the sensor set 10 from a distance. The information could be used when children are in another room during sleep or doing activities in a location remote from the parents. In further embodiments, the relay 4 can include the capability to sound an alarm. In addition, the relay 4 may be capable of providing telemetered characteristic sensor transceiver 100 data from the sensor set 10, as well as other data, to a remotely located individual via a modem connected to the relay 4 for display on a monitor, pager or the like. The relay 4 may also be used to transfer information from a remote device to the transceiver 100.

[0045] Referring to FIG. 10, data may be exchanged between the transceiver 100 and a remotely located computer 6 such as a personal computer (PC), personal digital assistant (PDA), or the like, through a communication station 8 over communication lines (e.g., modem or wireless connection). In some embodiments, the communication station 8 may be omitted such that the transceiver 100 directly connects to the computer 6 via the modem or wireless connection. In further embodiments, the telemetered characteristic sensor transceiver 100 connects to an RF programmer, which acts as a relay, or shuttle, for data communication between the sensor set 10 and a PC, PDA, communication station, data processor, or the like. In further alternatives, the telemetered characteristic sensor transceiver 100 may transmit an alarm to a remotely located device, such as a communication station, modem or the like to summon help. In addition, further embodiments may include the capability for simultaneous monitoring of multiple sensors and/or include a sensor for multiple measurements.

[0046] In one embodiment, the telemetered characteristic sensor transceiver 100 may have and use an input port for direct (e.g., wired) connection for multiple purposes. Possible examples

include the ability to directly connect to a programming or data readout device and/or be used for calibration of the sensor set 10. Preferably, the input port is water proof (or water resistant) or includes a water proof, or water resistant, removable cover.

[0047] Preferably, the telemetered characteristic sensor transceiver 100 takes characteristic information, such as glucose data or the like, from the percutaneous sensor set 10 and transmits it via wireless telemetry to the characteristic monitor 200, which displays and logs the received glucose readings. Logged data can be downloaded from the characteristic monitor 200 to a PC, PDA, or the like, for detailed data analysis. Alternatively, in accordance with the present invention, glucose values may be calculated and logged by the transceiver 100. Accordingly, the logged data may be downloaded directly from the transceiver 100 by the PC, PDA, insulin pump or the like.

[0048] In further embodiments, the telemetered characteristic sensor system may be used in a hospital environment or the like. Still further embodiments of the present invention may include one or more buttons (on the telemetered characteristic sensor transceiver 100 or characteristic monitor 200) to record data and events for later analysis, correlation, or the like. In addition, the telemetered characteristic sensor transceiver 100 may include a transmit/receive on/off button for compliance with safety standards and regulations to temporarily suspend transmissions or receptions. Further buttons can include a sensor on/off button to conserve power and to assist in initializing the sensor set 10. The telemetered characteristic sensor transceiver 100 and characteristic monitor 200 may also be combined with other medical devices to combine other patient data through a common data network and telemetry system.

[0049] Referring to FIGS. 1-7, a percutaneous sensor set 10 is provided for subcutaneous placement of an active portion of a flexible sensor 12 (see FIGS. 6 and 7), or the like, at a selected site in the body 1000 of a user. The subcutaneous or percutaneous portion of the sensor set 10 includes a hollow, slotted insertion needle 14, and a cannula 16. The needle 14 is used to facilitate quick and easy subcutaneous placement of the cannula 16 at the subcutaneous insertion site. Inside the cannula 16 is a sensing portion 18 of the sensor 12 to expose one or more sensor electrodes 20 to the user's bodily fluids through a window 22 formed in the cannula 16. After

insertion, the insertion needle 14 is withdrawn to leave the cannula 16 with the sensing portion 18 and the sensor electrodes 20 in place at the selected insertion site.

[0050] In preferred embodiments, the percutaneous sensor set 10 facilitates accurate placement of a flexible thin film electrochemical sensor 12 of the type used for monitoring specific blood parameters representative of a user's condition. Preferably, the sensor 12 monitors glucose levels in the body, and may be used in conjunction with automated or semi-automated medication infusion pumps of the external or implantable type as described in U.S. Pat. Nos. 4,562,751; 4,678,408; 4,685,903 or 4,573,994, to control delivery of insulin to a diabetic patient.

[0051] Preferred embodiments of the flexible electrochemical sensor 12 are constructed in accordance with thin film mask techniques to include elongated thin film conductors embedded or encased between layers of a selected insulative material such as polyimide film or sheet, and membranes. The sensor electrodes 20 at a tip end of the sensing portion 18 are exposed through one of the insulative layers for direct contact with patient blood or other body fluids, when the sensing portion 18 (or active portion) of the sensor 12 is subcutaneously placed at an insertion site. In alternative embodiments, other types of implantable sensors, such as chemical based, optical based, or the like, may be used.

[0052] Further description of flexible thin film sensors of this general type are be found in U.S. Pat. No. 5,391,250, entitled METHOD OF FABRICATING THIN FILM SENSORS, which is herein incorporated by reference. A connection portion may be conveniently connected electrically to the monitor 200 or a telemetered characteristic sensor transceiver 100 by a connector block (or the like) as shown and described in U.S. Pat. No. 5,482,473, entitled FLEX CIRCUIT CONNECTOR, which is also herein incorporated by reference. Thus, in accordance with embodiments of the present invention, subcutaneous sensor sets 10 are configured or formed to work with either a wired or a wireless characteristic sensor system.

[0053] In accordance with the present invention, the proximal part of the sensor 12 is mounted in a mounting base 30 adapted for placement onto the skin of a user. The mounting base 30 may be a pad having an underside surface coated with a suitable pressure sensitive adhesive layer, with a peel-off paper strip normally provided to cover and protect the adhesive layer, until the sensor set 10 is ready for use. In preferred embodiments, the adhesive layer

includes an anti-bacterial agent to reduce the chance of infection; however, alternative embodiments may omit the agent. In the illustrated embodiment, the mounting base is generally oval, but alternative embodiments may be other shapes, such as rectangular, circular, hour-glass, butterfly, irregular, or the like.

[0054] An upper portion of the insertion needle 14 is adapted for slide-fit reception through a lower bore 40 formed at an underside of the mounting base 30. As shown, the insertion needle 14 has a sharpened tip 44 and an open slot 46 which extends longitudinally from the tip 44 at the underside of the needle 14 to a position at least within the bore 40. Above the mounting base 30, the insertion needle 14 may have a full round cross-sectional shape, and may be closed off at a rear end of the needle 14. Further description of the needle 14 and the sensor set 10 are found in U.S. Pat. No. 5,586,553, entitled "TRANSCUTANEOUS SENSOR INSERTION SET" and U.S. patent application Ser. No. 08/871,831, entitled "DISPOSABLE SENSOR INSERTION ASSEMBLY," which are herein incorporated by reference.

[0055] The cannula 16 is best shown in FIGS. 6 and 7, and includes a first portion 48 having a partly-circular cross-section to fit within the insertion needle 14 that extends downwardly from the mounting base 30. In alternative embodiments, the first portion 48 may be formed with a solid core, rather than a hollow core. In preferred embodiments, the cannula 16 is constructed from a suitable medical grade plastic or elastomer, such as polytetrafluoroethylene, silicone, or the like. The cannula 16 also defines an open lumen 50 in a second portion 52 for receiving, protecting and guideably supporting the sensing portion 18 of the sensor 12. The cannula 16 has one end fitted into the bore 40 formed at the underside of the mounting base 30, and the cannula 16 may be secured to the mounting base 30 by a suitable adhesive, ultrasonic welding, snap fit or other selected attachment method. From the mounting base 30, the cannula 16 extends angularly downwardly with the first portion 48 nested within the insertion needle 14, and terminates before the needle tip 44. At least one window 22 is formed in the lumen 50 near the implanted end 54, in general alignment with the sensor electrodes 20, to permit direct electrode exposure to the user's bodily fluid when the sensor 12 is subcutaneously placed. Alternatively, a membrane can cover this area with a porosity that controls rapid diffusion of glucose through the membrane.

[0056] As shown in FIGS. 1, 2 and 8A, the telemetered characteristic sensor transceiver 100 is directly coupled to a sensor set 10 via the mounting base 30. This minimizes the amount of skin surface covered or contacted by medical devices, and minimizes movement of the sensor set 10 relative to the telemetered characteristic sensor transceiver 100. In a preferred embodiment, the transceiver 100 is detachably coupled to the mounting base 30 housing the sensor set 10. Accordingly, the transceiver 100 is coupled to the sensor set after the sensor set has been placed into body 100 of the user. In addition, the transceiver 100 may be detached from the sensor set 10 while the sensor set 10 is implanted in the body 1000 of the user, thus allowing the transceiver 100 to independently attach to other complementary devices if desired. According to the preferred embodiments of the present invention, the characteristic monitor transmitter 100 is coupled to a sensor set 10 using a male/female connection scheme for direct connection to the the sensor set 10. In preferred embodiments, as best seen in Figure 12, the characteristic monitor transmitter 100 shall have a female connector interface 150 (or communication port 150) built into the housing 106 of the characteristic monitor transmitter 100. Detents at the female connector interface 150 are used to mate and lock with locking prongs located on the male sensor connector 35 of the sensor set 10. Alternatively, other detachable connector systems may be used including the modification of the connection scheme to place a female connector on the sensor 10 and the male connector on characteristic monitor transmitter 100.

[0057] In accordance with an alternative embodiment, communication between the transceiver 100 and the sensor 12 is performed by wireless means. In one embodiment, the telemetered characteristic sensor transceiver 100 is optically coupled with an implanted sensor, in the subcutaneous, dermal, sub-dermal, inter-peritoneal or peritoneal tissue, to interrogate the implanted sensor using visible, and/or IR frequencies, either transmitting to and receiving a signal from the implanted sensor or receiving a signal from the implanted sensor.

[0058] FIGS. 8C and 8D show top and bottom layout diagrams of the characteristic monitor transceiver 100 according to the preferred embodiments. The telemetered characteristic sensor transceiver 100 includes a housing 106 that supports a printed circuit board 108 that contains a voltage regulator 1108, comparators 1110 and 1116, power switch 1112, analog switch 1114, Op Amps 1118, Microprocessor 1120, Digital to Analog Converter 1122, Real Time Clock 1126,

EEPROM 1124, RF Transceiver 1128, and a battery 1130,, as well as other associated electronics such as an antenna. In preferred embodiments, the housing 106 is formed from an upper case 114 and a lower case 116 that are sealed with an ultrasonic weld to form a waterproof (or resistant) seal to permit cleaning by immersion (or swabbing) with water, cleaners, alcohol or the like. In preferred embodiments, the upper and lower case 114 and 116 are formed from a medical grade plastic. However, in alternative embodiments, the upper case 114 and lower case 116 may be connected together by other methods, such as snap fits, sealing rings, RTV (silicone sealant) and bonded together, or the like, or formed from other materials, such as metal, composites, ceramics, or the like. In other embodiments, the separate case can be eliminated and the assembly is simply potted in epoxy or other moldable materials that is compatible with the electronics and reasonably moisture resistant. In preferred embodiments, the housing 106 is disk or oval shaped. However, in alternative embodiments, other shapes, such as hour glass, rectangular or the like, may be used. Preferred embodiments of the housing 106 are sized in the range of 1.0 square inches and 0.25 inches thick or less to minimize weight, discomfort and the noticeability of the telemetered characteristic sensor transceiver 100 on the body of the user. However, larger or smaller sizes, may be used. Also, the housing may simply be formed from potted epoxy, or other material, especially if the battery life relative to the device cost is long enough, or if the device is rechargeable.

[0059] In preferred embodiments, the size of the transceiver 100 has been reduced to fit directly onto the sensor set 10 and be supported by the sensor set 10 itself. Unlike the other embodiments of the present invention that required the transceiver 100 to be attached separately to the body of a user by a separate adhesive tape, the transceiver 100 can remain fixed in its location by being attached to the sensor set 10. In other words, a single adhesive tape used to attach the sensor set to the patient can also support the transceiver 100. In alternative embodiments, the lower case 116 may have an underside surface coated with a suitable pressure sensitive adhesive layer, with a peel-off paper strip normally provided to cover and protect the adhesive layer, until the sensor set telemetered characteristic sensor transceiver 100 is ready for use. In further alternative embodiments, the adhesive layer includes an anti-bacterial agent to reduce the chance of infection. In still further alternative embodiments, the adhesive layer may

be omitted and the telemetered characteristic sensor transceiver 100 is secured to the body by other methods, such as an adhesive overdressing, straps, belts, clips or the like.

[0060] Referring to FIG. 8B, the printed circuit board 108 of the telemetered characteristic sensor transceiver 100 functionally includes (using the electronics described above) a sensor interface 122, processing electronics 124, timers 126, and data formatting electronics 128. In preferred embodiments, the sensor interface 122, processing electronics 124, timers 126, and data formatting electronics 128 are formed on a single customized semiconductor chip, but in alternative embodiments, separate semiconductor chips can be used. The sensor interface 122 is electrically connected with the sensor set 10 via the mounting base 30 when the transceiver 100 is plugged into the mounting base 30. In preferred embodiments, the sensor interface 122 may be permanently connected to sensor set 10. However, in alternative embodiments, the sensor interface 122 may be configured in the form of a jack to accept different types of cables that provide adaptability of the telemetered characteristic sensor transceiver 100 to work with different types of sensors and/or sensors placed in different locations of the user's body. Still further, in alternative embodiments, communication between the sensor interface 122 and the sensor set 10 may be performed by wireless means. In preferred embodiments, the printed circuit board 108, and associated electronics are capable of operating in a temperature range of 0-50 degrees C. However, larger or smaller temperature ranges may be used.

[0061] Preferably, the battery assembly utilizes a weld tab design to connect power to the system. For example, it can use series silver oxide 357 battery cells, or the like. However, it is understood that different battery chemistries may be used, such as lithium based chemistries, alkaline batteries, nickel metalhydride, or the like, and different numbers of batteries can be used. In further embodiments, the sensor interface 122 will include circuitry and/or a mechanism for detecting connection to the sensor set 10. This would provide the capability to save power and to more quickly and efficiently start initialization of the sensor set 10. In preferred embodiments, the batteries have a life in the range of 3 months to 2 years, and provide a low battery warning alarm. Alternative embodiments may provide longer or shorter battery lifetimes, or include a power port, solar cells or an inductive coil to permit recharging of rechargeable batteries in the telemetered characteristic sensor transceiver 100.

[0062] According to the alternative preferred embodiments of the present invention, a rechargeable battery is used with the characteristic monitor transceiver 100. Although the concept of a rechargeable battery in a characteristic monitor transmitter has been proposed in the past, the use of a rechargeable battery is contrary to conventional wisdom. Typically, rechargeable batteries are big and heavy and need heavy current to recharge the battery. However, the characteristic monitor transceiver 100 have low current circuits that would not work well with conventional rechargeable batteries. In preferred embodiments, the rechargeable battery is a lithium polymer battery that avoids the problems with conventional rechargeable batteries. The lithium polymer battery has the preferred characteristics of being light, thin, having a high energy density and a shallow current discharge, and good for multiple recharges. In alternative embodiments, different battery chemistry may be used that have the same preferred characteristics of the lithium polymer battery.

[0063] In preferred embodiments, the telemetered characteristic sensor transceiver 100 may provide power, through a cable to the sensor set 10. The power is used to monitor and drive the sensor set 10. The power connection is also used to speed the initialization of the sensor 12, when it is first placed under the skin. The use of an initialization process can reduce the time for sensor stabilization from several hours to an hour or less. The preferred initialization procedure uses a two step process. First, a high voltage (preferably between 1.0-1.2 volts--although other voltages may be used) is applied to the sensor 12 for 1 to 2 minutes (although different time periods may be used) to allow the sensor 12 to stabilize. Then, a lower voltage (preferably between 0.5-0.6 volts--although other voltages may be used) is applied for the remainder of the initialization process (typically 58 minutes or less). Other stabilization/initialization procedures using differing currents, currents and voltages, different numbers of steps, or the like, may be used. Other embodiments may omit the initialization/stabilization process, if not required by the sensor or if timing is not a factor.

[0064] At the completion of the stabilizing process, a reading may be transmitted from the sensor set 10 and the telemetered characteristic sensor transceiver 100 to the characteristic monitor 200, and then the user will input a calibrating glucose reading into the characteristic monitor 200. In alternative embodiments, a fluid containing a known value of glucose may be

injected into the site around the sensor set 10, and then the reading is sent to the characteristic monitor 200 and the user inputs the known concentration value, presses a button (not shown) or otherwise instructs the monitor to calibrate using the known value. In further embodiments, the calibrating glucose reading and/or the known concentration value are transmitted to, and stored in, the sensor transceiver 100. Accordingly, the transceiver 100 can perform the calibration using the received calibrating glucose reading and/or the known concentration value.

[0065] During the calibration process, the telemetered characteristic sensor transceiver 100 checks to determine if the sensor set 10 is still connected. If the sensor set 10 is no longer connected, the telemetered characteristic sensor transceiver 100 will abort the stabilization process and sound an alarm (or send a signal to the characteristic monitor 200 to sound an alarm).

[0066] As shown in FIG. 2, the characteristic monitor may include a display 214 that is used to display the results of the measurement received from the sensor 12 in the sensor set 10 via the telemetered characteristic monitor transceiver 100. The results and information displayed includes, but is not limited to, trending information of the characteristic (e.g., rate of change of glucose), graphs of historical data, average characteristic levels (e.g., glucose), or the like. Alternative embodiments include the ability to scroll through the data. The display 214 may also be used with buttons (not shown) on the characteristic monitor to program or update data in the characteristic monitor 200. It is noted that the typical user can be expected to have somewhat diminished visual and tactile abilities due to complications from diabetes or other conditions. Thus, the display 214 and buttons should be configured and adapted to the needs of a user with diminished visual and tactile abilities. In alternative embodiments, the value can be conveyed to the user by audio signals, such as beeps, speech or the like. Still further embodiments may use a touch screen instead of (or in some cases addition to) buttons to facilitate water proofing and to ease changes in the characteristic monitor 200 hardware to accommodate improvements or upgrades.

[0067] Preferably, the characteristic monitor uses batteries (not shown) to provide power to the characteristic monitor. For example, a plurality of silver oxide batteries may be used. However, it is understood that different battery chemistries may be used, such as lithium based,

alkaline based, nickel metalhydride, or the like, and different numbers of batteries can be used. In preferred embodiments, the batteries have a life in the range of 1 month to 2 years, and provide a low battery warning alarm. Alternative embodiments may provide longer or shorter battery lifetimes, or include a power port, solar cells or an induction coil to permit recharging of rechargeable batteries in the characteristic monitor 200. In preferred embodiments, the batteries are not replaceable to facilitate waterproofing of the housing 106.

[0068] In further embodiments of the present invention, the characteristic monitor 200 may be replaced by a different device. For example, in one embodiment, the telemetered characteristic sensor transceiver 100 communicates with an RF programmer (not shown) that is also used to program and obtain data from an infusion pump or the like. The RF programmer may also be used to update and program the transceiver 100 since the transceiver 100 preferably includes a receiver for remote programming, calibration or data receipt. The RF programmer can be used to store data obtained from the sensor 18 and then provide the data to either an infusion pump, characteristic monitor, computer or the like for analysis.

[0069] In further embodiments, the transceiver 100 may transmit the data to a medication delivery device, such as an infusion pump or the like, as part of a closed loop system. This would allow the medication delivery device to compare sensor results with medication delivery data and either sound alarms when appropriate or suggest corrections to the medication delivery regimen. In preferred embodiments, the transceiver 100 includes a receiver for receiving data from the medication delivery device such that the transceiver 100 can compare sensor results with medication delivery. The transceiver 100 may also use the receiver to receive updates or requests for additional sensor data. An example of one type of RF programmer can be found in U.S. patent application Ser. No. 60/096,994 filed Aug. 18, 1998 entitled "INFUSION DEVICE WITH REMOTE PROGRAMMING, CARBOHYDRATE CALCULATOR AND/OR VIBRATION ALARM CAPABILITIES," or U.S. Patent No. 6,554,798 issued on April 29, 2003 entitled "EXTERNAL INFUSION DEVICE WITH REMOTE PROGRAMMING, BOLUS ESTIMATOR AND/OR VIBRATION ALARM CAPABILITIES," both of which are herein incorporated by reference.

[0070] In further embodiments, the telemetered characteristic sensor transceiver may include a modem, or the like, to transfer data to and receive data from a healthcare professional. Preferably, the transceiver can receive updated programming or instructions via a modem connection.

[0071] In use, the sensor set 10 permits quick and easy subcutaneous placement of the active sensing portion 18 at a selected site within the body of the user. More specifically, the peel-off strip covering the adhesive layer is removed from the mounting base 30, at which time the mounting base 30 can be pressed onto and seated upon the patient's skin. During this step, the insertion needle 14 pierces the user's skin and carries the protective cannula 16 with the sensing portion 18 to the appropriate subcutaneous placement site. During insertion, the cannula 16 provides a stable support and guide structure to carry the flexible sensor 12 to the desired placement site. When the sensor 12 is subcutaneously placed, with the mounting base 30 seated upon the user's skin, the insertion needle 14 can be slidably withdrawn from the user. During this withdrawal step, the insertion needle 14 slides over the first portion 48 of the protective cannula 16, leaving the sensing portion 18 with electrodes 20 directly exposed to the user's body fluids via the window 22. Further description of the needle 14 and the sensor set 10 are found in U.S. Pat. No. 5,586,553, entitled "TRANSCUTANEOUS SENSOR INSERTION SET"; U.S. Pat No. 5,954,643, entitled "INSERTION SET FOR A TRANSCUTANEOUS SENSOR"; and U.S. Pat No. 5,951,521, entitled "A SUBCUTANEOUS IMPLANTABLE SENSOR SET HAVING THE CAPABILITY TO REMOVE OR DELIVER FLUIDS TO AN INSERTION SITE," which are herein incorporated by reference.

[0072] The sensor set 10 is connected to the telemetered characteristic sensor transceiver 100, so that the sensor 12 can be used over a prolonged period of time for taking blood chemistry or other characteristic readings, such as blood glucose readings in a diabetic patient. Preferred embodiments of the telemetered characteristic sensor transceiver 100 detect the connection of the sensor 12 to activate the telemetered characteristic sensor transceiver 100. For instance, connection of the sensor 12 may activate a switch or close a circuit to turn the telemetered characteristic sensor transceiver 100 on. The use of a connection detection provides the capability to maximize the battery and shelf life of the telemetered characteristic sensor

transceiver prior to use, such as during manufacturing, test and storage. Alternative embodiments of the present invention may utilize an on/off switch (or button) on the telemetered characteristic monitor transceiver 100.

[0073] Once the transceiver 100 is attached to the sensor set 10, the user then activates the transceiver 100, or the transceiver is activated by detection of the connection to the sensor 12 of the sensor set 10. Generally, the act of connecting (and disconnecting) the sensor 12 activates (and deactivates) the telemetered characteristic sensor transceiver 100, and no other interface is required. In alternative steps, the sensor set 10 is connected to the transceiver 100 prior to placement of the sensor 12 to avoid possible movement or dislodging of the sensor 12 during attachment of the transceiver 100. Also, the transceiver may be attached to the user prior to attaching the sensor set 10 to the transceiver 100.

[0074] The user then programs the characteristic monitor (or it learns) the identification of the transceiver 100 and verifies proper operation and calibration of the transceiver 100. The characteristic monitor 200 and transceiver 100 then work to transmit and receive sensor data to determine characteristic levels. Thus, once a user attaches a transceiver 100 to a sensor set 10, the sensor 12 is automatically initialized and readings are periodically transmitted, together with other information, to the characteristic monitor 200. Additionally, the transceiver 100 is ready to receive data from the characteristic monitor 200 or other remote electronic device.

[0075] As stated above, the telemetered characteristic sensor transceiver 100 of the present invention is capable of two-way communication. Thus, the transceiver 100 overcomes the limitations of the prior art sensor system capable of only one-way communication. The telemetered characteristic monitor transceiver 100 can transmit data to, as well as receive data or requests from, a characteristic monitor or other electronic device. Hence, in accordance with the present invention, the characteristic monitor or electronic device the telemetered characteristic sensor transceiver 100 communicates with also comprises a transceiver for transmitting and receiving data.

[0076] Accordingly, because the telemetered characteristic sensor transceiver of the present invention is capable of two-way communication, the transceiver 100 may be linked to various devices that can receive sensor glucose values, such as infusion pumps, monitors, personal

computers and hospital system devices, in a stand alone or network structure. Preferably, by running proprietary calibration, filtering and calibration algorithms on the sensor transceiver 100, sensor glucose values can be transmitted to a variety of non-proprietary devices. Thus, the process of monitoring glucose levels is more convenient for the user. FIG. 11 is a block diagram of a telemetered characteristic sensor transceiver communicating with a variety of remote electronic devices in a network structure. As shown, the transceiver 100 can maintain multiple two-way communication links with the characteristic monitor 200, an infusion pump 210, a computer 220, a PDA 230, a cellular phone 240 and a blood glucose meter 250. All of these devices may then take further action based on the current glucose information such as giving alarms, alerts, changing protocols, notifying third parties, etc. In further embodiments, the transceiver 100 can even send signals to an automobile which can display the sensor reading on display in the car (e.g. GPS/stereo interface). In even further embodiments, the car may advice the driver to pull over if the driver is driving or don't start the car if the driver is just entered the car, if the blood sugar levels are at dangerous levels.

[0077] In one preferred embodiment, it is not necessary for the transceiver 100 to be in a reciprocal communication link with an electronic device to communicate information to the electronic device. For example, the transceiver 100 may arbitrarily broadcast data signals to a surrounding area up to a specific range. Accordingly, any of a number of electronic devices within the specific range, such as the characteristic monitor 200, the infusion pump 210, the computer 220, the PDA 230, the cellular phone 240 and the blood glucose meter 250, for example, which are capable of receiving a signal from the transceiver 100 may automatically/optionally receive the broadcasted information. Thus, the transceiver 100 need not be reciprocally connected to the device, by wireless or wired means, in order to communicate information to the device.

[0078] In accordance with one embodiment of the present invention, because actual sensor glucose values are being transmitted from the transceiver 100 to any of a number of remote devices, security measures are needed to ensure privacy. For example, in one aspect of the invention, the sensor glucose values are encrypted or appended with a security key prior to transmission to prevent unwanted devices from reading the information. Preferably, remote

devices, which are intended to receive the sensor glucose values, are provided with the ability to decrypt the transmitted data or unlock the appended security key in order to read the data.

[0079] In accordance with one embodiment of the present invention, the telemetered characteristic sensor transceiver 100 may periodically exchange data with other network nodes (i.e., a pump, monitor, computer, cellular phone, etc.) in a synchronous manner. For example, a new electronic device may enter into the network of the transceiver 100 by first waking up the transceiver 100 from a sleep mode. Thereafter, the new electronic device synchronizes communication with the transceiver to establish a communication link. Alternatively, the transceiver 100 may periodically wake up for the purpose of detecting a new device, and subsequently synchronize communication with any new devices detected.

[0080] In one aspect of the invention, the transceiver may wake up from a sleep mode according to a magnetic swipe procedure. In another aspect of the invention, the transceiver 100 comprises an ultrasonic sensor such that a remote electronic device can wake the transceiver 100 by transmitting an ultrasonic signal to the transceiver 100. Notably, use of the ultrasonic signal wake-up scheme is advantageous because power is conserved.

[0081] In accordance with another embodiment of the present invention, the telemetered characteristic sensor transceiver 100 may irregularly or aperiodically exchange data with other network nodes in an asynchronous manner. For example, a glucose meter may aperiodically transmit blood glucose (BG) values to the transceiver 100, wherein the meter blood glucose values are preferably stored and used by the transceiver 100 to calibrate calculated sensor glucose values. In another example, a computer may request a download of glucose history data from the transceiver 100.

[0082] During two-way communication between the transceiver 100 and other network nodes, various types of information may be exchanged either synchronously or asynchronously. For example, information related to device configuration may be exchanged. This may include a device identifier, patient information and time information. Communication link information may also be exchanged, which may include a communication rate, a frequency (e.g., 916 Mhz or 868 Mhz) and configuration options for frequency hopping. Adaptive communication configuration information, which will be described below, may also be exchanged. Furthermore,

history data and calibration information can be exchanged. This may include calibration data, sensor initialization sequence and configuration information, dynamic sensor initialization parameters and glucose history data.

[0083] In one aspect of the present invention, the dynamic sensor initialization parameters may require the application of an initialization sequence when a calibration factor falls below a certain value. Furthermore, the glucose history data may be transmitted based on a time interval. For example, data points acquired between a first arbitrary point in time and a second arbitrary point in time may be transmitted from the transceiver 100 to a network node.

[0084] In accordance with another embodiment of the present invention, the telemetered characteristic sensor transceiver 100 is capable of performing data calibration and sensor glucose value calculation unlike pre-existing glucose sensor transmitters. Because the transceiver 100 is capable of two-way communication and substantial processing power, the transceiver 100 can receive and store calibration data from a remote network device, such as meter blood glucose values, and use this data to calibrate the sensor's readings. Accordingly, the transceiver 100 can appropriately calculate sensor glucose values using the calibrated sensor readings, and store the values for a period of time based on a rate at which the sensor glucose values are calculated. Thus, the user does not need to wait to obtain values from a meter or other remote device before performing calibration because the calibration data would already be stored in the transceiver 100. In previous systems, it was necessary to couple a transmitter to a monitor, or remote device, to extract actual sensor glucose readings. However, in the present invention, sensor glucose values can be calculated using just one device.

[0085] In accordance with the present invention, calculating sensor glucose values at the transceiver 100 has many advantages. For example, more data points are available for sensor calibration and sensor glucose value calculation. Because data acquisition is no longer limited by a transmission rate, the transceiver 100 can periodically read sensor data and run at least one of a calibration algorithm and a glucose value calculation algorithm if needed.

[0086] Another advantage is that glucose history information is stored on the transceiver 100. Thus, because the transceiver 100 can be networked to a plurality of devices, the information is available to any receiver or network node on demand. Furthermore, the transceiver 100 can

continuously calculate glucose values even when a remote device is not in proximity to the user. Thus, when communication between the transceiver 100 and the remote device fails, the calibration algorithm can continue to calculate glucose data points. Preferably, when communication is re-established, the remote device can synchronize data with the transceiver 100 and receive glucose values calculated while the remote device was not communicating with the transceiver 100.

[0087] In one aspect of the invention, the transceiver 100 may comprise a display for displaying information transmitted, received or processed by the transceiver 100. In another aspect of the invention, the transceiver 100 may include a small vibrator or beep alarm to indicate to the user that a remote device is not near by.

[0088] In accordance with another embodiment of the present invention, a synchronous communication rate between the transceiver 100 and a remote device is dynamic based on at least one of glucose information (data or trend), glucose threshold information and communication status. For example, a communication rate may be increased when a blood glucose value is beyond a normal range, or represents a steep rise or drop in blood glucose value. The communication rate can also be proportional to a risk factor. In another example, the communication rate may be decreased when blood glucose conditions are normal. In a further example, a communication power may be increased when communication is lost or a low signal strength is detected between the transceiver 100 and the remote device.

[0089] In accordance with another embodiment of the present invention, the synchronous communication rate between the transceiver 100 and the remote device can depend on a power mode. For example, if the transceiver 100 is in a power-saving mode, then the rate of communication may be decreased.

[0090] In one aspect of the invention, real-time calibration and glucose calculation algorithms are coded on the transceiver 100. Moreover, non-real-time (i.e., retrospective) algorithms may be stored on a remote device.

[0091] FIG. 12 illustrates a telemetered characteristic sensor transceiver capable of connecting to various devices in accordance with one embodiment of the present invention. As stated above, the transceiver 100 may be detachably coupled to the mounting base 30, which

houses the sensor set 10, thus allowing the transceiver 100 to independently attach to other complementary devices. Referring to FIG. 12, in a preferred embodiment, the transceiver 100 is capable of detaching from the mounting base 30 and separately attaching to a complementary device, such as a battery charger 500. As such, when a user of the transceiver 100 wishes to recharge the transceiver 100, the user can easily do so without having to withdraw the needle 14 from the insertion site before recharging, and reinsert the needle 14 after recharging, because the transceiver 100 can independently attach to the battery charger 500.

[0092] FIG. 13 illustrates a communication port of a telemetered characteristic sensor transceiver capable of connecting to various devices in accordance with one embodiment of the present invention. Referring to FIGS. 12 and 13, a single communication port 150 of the transceiver 100 is capable of operating with the sensor set 10, as well as other complementary devices, such as the battery charger 500. As shown, an upper portion of the communication port 150 may receive a male connecting portion 35 of the mounting base 30. Preferably, the male connecting portion 35 is electrically coupled to the sensor set 10. Thus, when the male connecting portion 35 is inserted into the communication port 150, the sensor set 10 and the transceiver 100 can operationally communicate with each other.

[0093] Furthermore, a lower portion of the communication port 150 is capable of receiving connecting portions of other electrical devices. For example, the lower portion of the communication port 150 may receive a connecting portion 535 of the battery charger 500. Thus, when the connecting portion 535 is inserted into the communication port 150, the battery charger 500 is operationally coupled with the transceiver 100 to provide the transceiver 100 with power. In other embodiments, the lower portion of the communication port 150 may receive connecting portions of other electrical devices for facilitating communication. Thus, when a connecting portion of an electrical device is inserted into the lower portion of the communication port 150, the electrical device is able to exchange information with the transceiver 100.

[0094] While the description above refers to particular embodiments of the present invention, it will be understood that many modifications may be made without departing from the spirit thereof. Thus, the accompanying claims are intended to cover such modifications as would fall within the true scope and spirit of the present invention.

[0095] The presently disclosed embodiments are therefore to be considered in all respects as illustrative and not restrictive, the scope of the invention being indicated by the appended claims, rather than the foregoing description, and all changes which come within the meaning and range of equivalency of the claims are therefore intended to be embraced therein.

WHAT IS CLAIMED IS:

1. A telemetered characteristic sensor transceiver for exchanging data with at least one remote device, the transceiver comprising:

a housing detachably coupled to a sensor located on a body of a user, the sensor producing a signal indicative of a user characteristic;

a processor formed within the housing and in communication with the sensor for processing the signal produced by the sensor;

a transmitter coupled to the processor for transmitting data to at least one remote device;

a receiver coupled to the processor for receiving data from the at least one remote device; and

a memory coupled to the processor for storing data,

wherein the processor performs calculations using at least one of the signal produced by the sensor, the data received from the at least one remote device and the data stored in the memory, and performs at least one of storing the calculations in the memory and transmitting the calculations to the at least one remote device through the transmitter.

2. The transceiver of claim 1, wherein the transceiver exchanges data with a plurality of remote devices in a network structure.

3. The transceiver of claim 1, wherein the transceiver exchanges data with the at least one remote device in a synchronous manner.

4. The transceiver of claim 1, wherein the transceiver wakes up from a sleep mode prior to exchanging data with the at least one remote device.

5. The transceiver of claim 4, wherein the at least one remote device wakes up the transceiver.

6. The transceiver of claim 5, further comprising an ultrasonic sensor for receiving an ultrasonic signal from the at least one remote device when the at least one remote device transmits the ultrasonic signal to the transceiver to wake up the transceiver.

7. The transceiver of claim 4, wherein the transceiver periodically wakes up independent of the at least one remote device.

8. The transceiver of claim 1, wherein the transceiver exchanges data with the at least one remote device in an asynchronous manner.

9. The transceiver of claim 8, wherein the data exchanged in the asynchronous manner comprises at least one of:

a blood glucose value; and

a request for glucose history data.

10. The transceiver of claim 1, wherein the data exchanged between the transceiver and the at least one remote device comprises at least one of:

device configuration data;

communication link configuration data;

adaptive communication configuration data;

glucose history data; and

calibration data.

11. The transceiver of claim 10, wherein the device configuration data comprises at least one of:

a device identification;

user information; and

time information.

12. The transceiver of claim 10, wherein the communication link configuration data comprises at least one of:

a communication rate;

frequency information; and

frequency hopping configuration information.

13. The transceiver of claim 10, wherein the glucose history data is exchanged according to a time interval.

14. The transceiver of claim 10, wherein the calibration data comprises at least one of:

sensor initialization sequence and configuration information; and

dynamic sensor initialization parameters.

15. The transceiver of claim 1, wherein the processor calculates sensor glucose values using at least one of the signal received from the sensor, the data received from the at least one remote device and the data stored in the memory.

16. The transceiver of claim 15, wherein a rate of exchanging data between the transceiver and the at least one remote device is dynamically changed depending on a characteristic of the calculated sensor glucose values.

17. The transceiver of claim 15, wherein a glucose calculation algorithm for calculating the sensor glucose values is stored in the memory.

18. The transceiver of claim 15, wherein the processor stores the calculated sensor glucose values in the memory or transmits the calculated sensor glucose values to the at least one remote device through the transmitter.

19. The transceiver of claim 18, wherein the calculated sensor glucose values are secured via an encryption scheme before transmission to the at least one remote device.

20. The transceiver of claim 15, wherein the receiver receives calibration data from the at least one remote device and the processor stores the received calibration data in the memory.

21. The transceiver of claim 20, wherein the processor performs a calibration using at least one of the calibration data stored in the memory, the signal received from the sensor and the calculated glucose sensor values.

22. The transceiver of claim 21, wherein a calibration algorithm for performing the calibration is stored in the memory.

23. The transceiver of claim 1, further comprising a display for displaying information processed by the processor.

24. The transceiver of claim 1, further comprising means for notifying the user that the at least one remote device is beyond a certain distance from the transceiver.

25. The transceiver of claim 1, wherein a power for exchanging data between the transceiver and the at least one remote device is dynamically changed depending on a strength of a detected signal between the transceiver and the at least one remote device.

26. The transceiver of claim 1, wherein a rate of exchanging data between the transceiver and the at least one remote device is dynamically changed depending on a power mode of at least one of the transceiver and the at least one remote device.

27. The transceiver of claim 1, wherein the housing is capable of detaching from the sensor and attaching to the at least one remote device.

28. The transceiver of claim 1, wherein the processor communicates with the sensor via wireless means.

29. The transceiver of claim 1, wherein the housing comprises a single communication port for facilitating at least two of:

communication between the transceiver and the sensor;

communication between the transceiver and the at least one remote device; and

an electrical connection between the transceiver and a battery charger.

ABSTRACT OF THE DISCLOSURE

The present invention relates to a telemetered characteristic sensor transceiver for exchanging data with at least one remote device. The transceiver includes a housing detachably coupled to a sensor located on a body of a user , the sensor producing a signal indicative of a user characteristic. A processor is formed within the housing and in communication with the sensor for processing the signal produced by the sensor. A transmitter is coupled to the processor for transmitting data to at least one remote device while a receiver is coupled to the processor for receiving data from the at least one remote device. A memory is coupled to the processor for storing data, wherein the processor performs calculations using at least one of the signal produced by the sensor, the data received from the at least one remote device and the data stored in the memory, and performs at least one of storing the calculations in the memory and transmitting the calculations to the at least one remote device through the transmitter.

FIG. 1

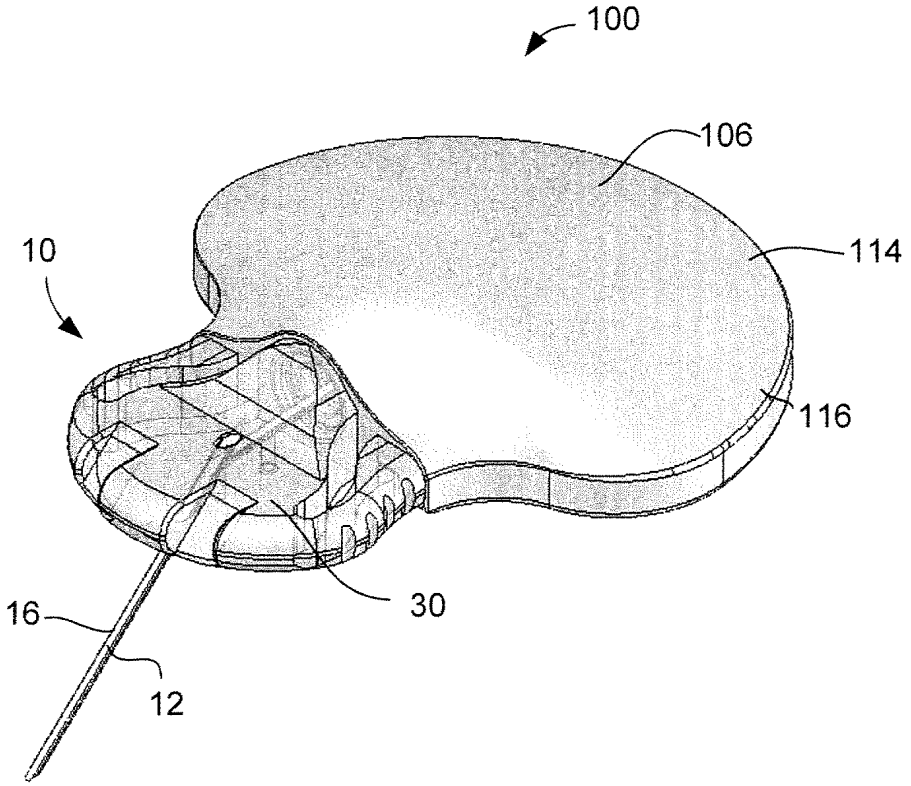
100
106
114
10
116
30
16
12

FIG. 2

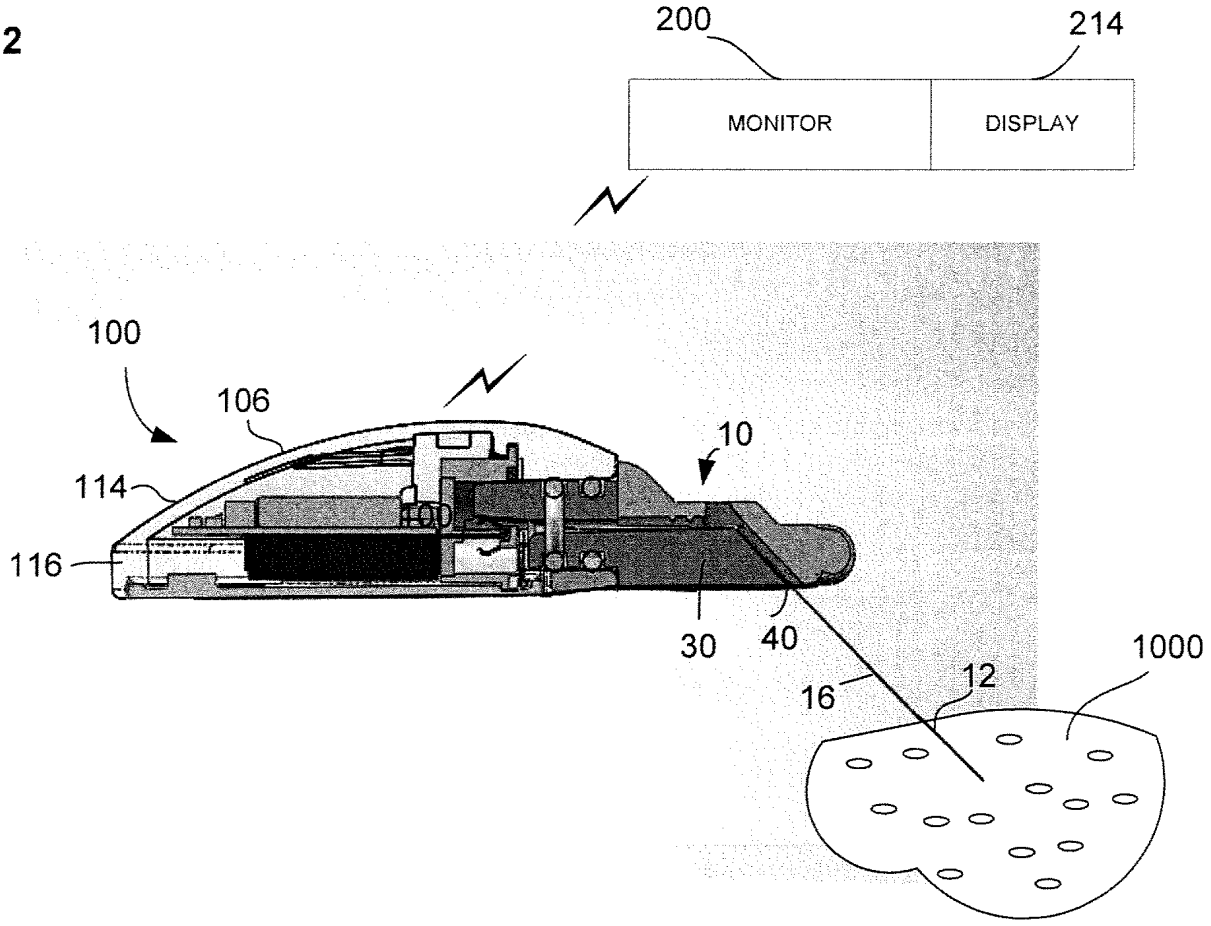
200
214
MONITOR
DISPLAY
100
106
10
114
116
30
40
16
12
1000

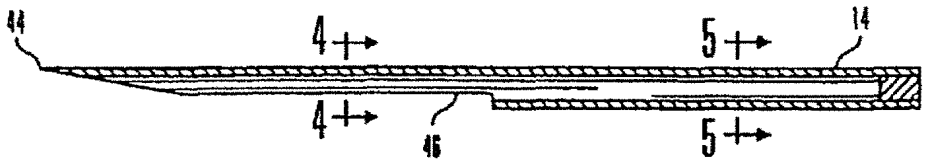

FIG. 3

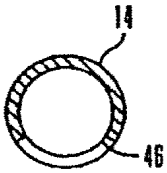

FIG. 4

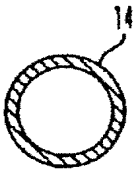

FIG. 5

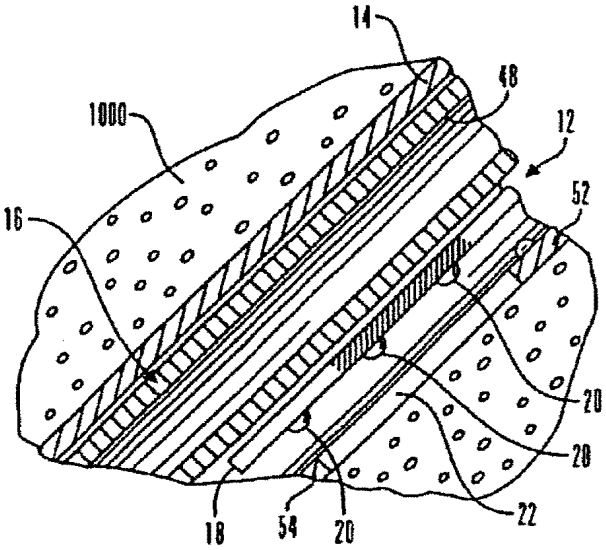

FIG. 6

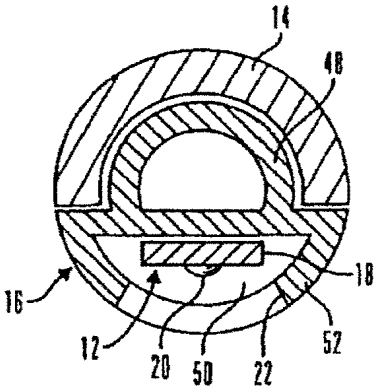

FIG. 7

FIG. 8A

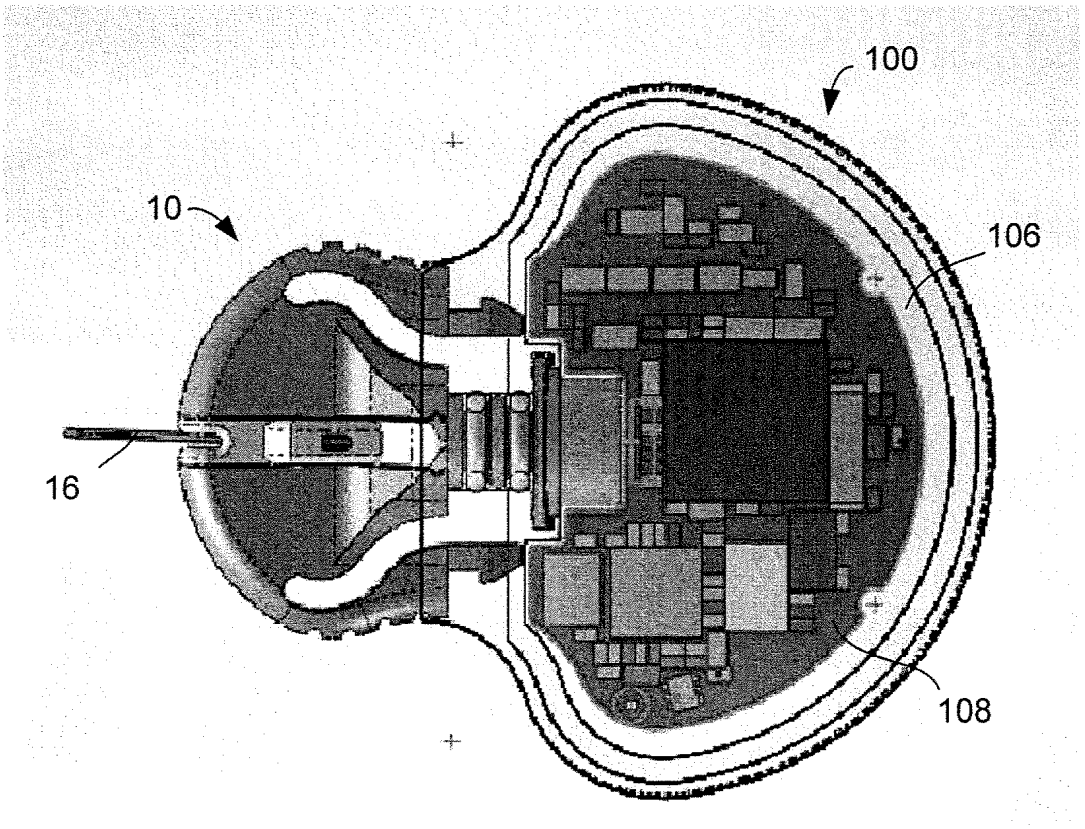
100
10
106
16
108

FIG. 8B

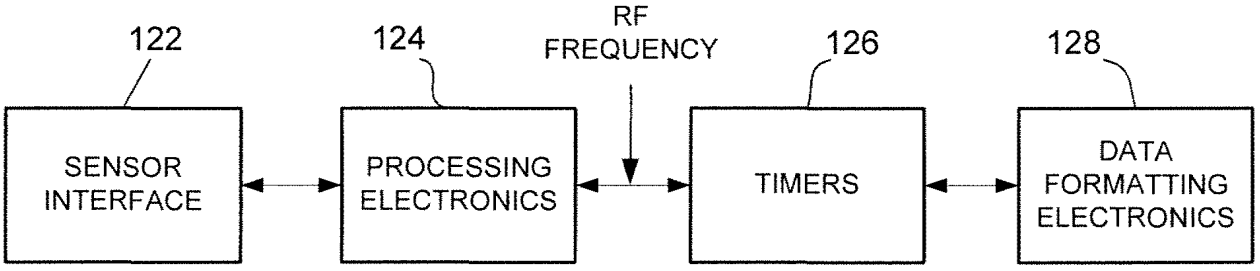
122
124
RF
FREQUENCY
126
128
SENSOR
INTERFACE
PROCESSING
ELECTRONICS
TIMERS
DATA
FORMATTING
ELECTRONICS

FIG. 8C

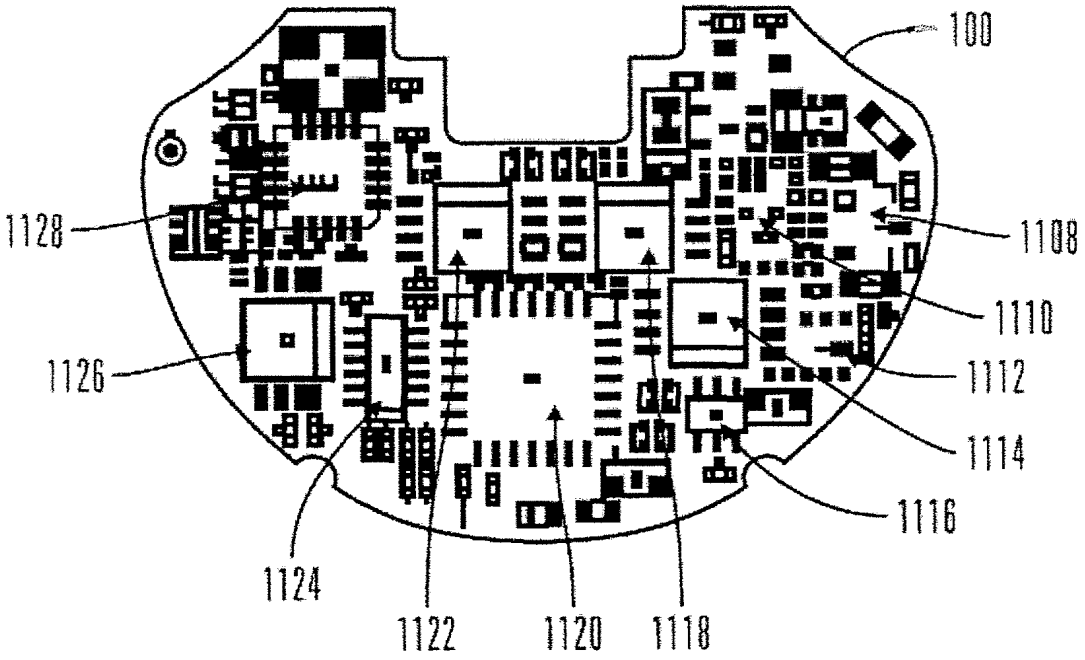
100
1108
1110
1112
1114
1116
1118
1120
1122
1124
1126
1128

FIG. 8D

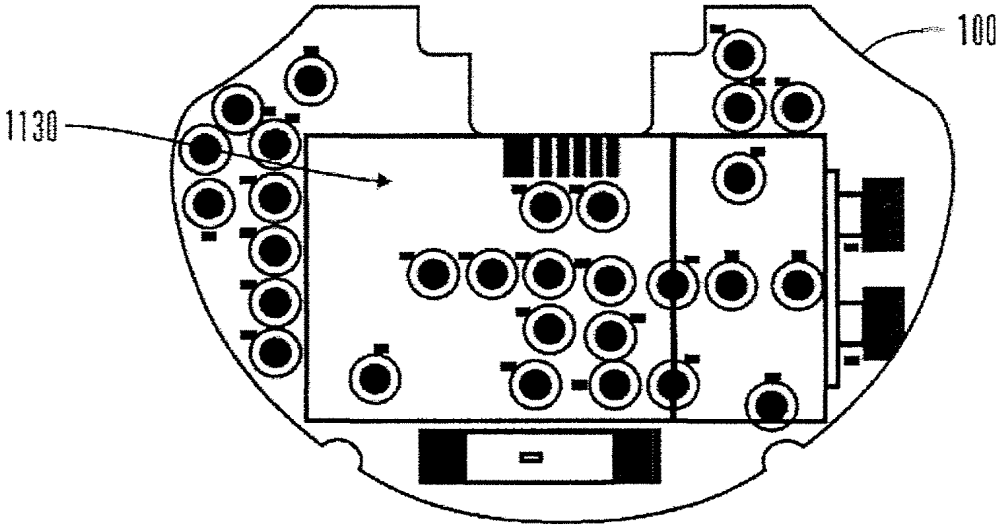
100
1130

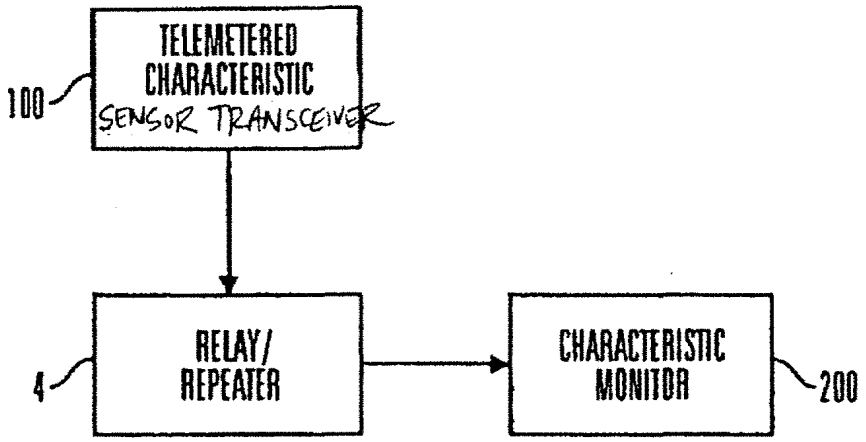
TELEMETERED CHARACTERISTIC SENSOR TRANSCEIVER
100
RELAY/ REPEATER
4
CHARACTERISTIC MONITOR
200

FIG. 9

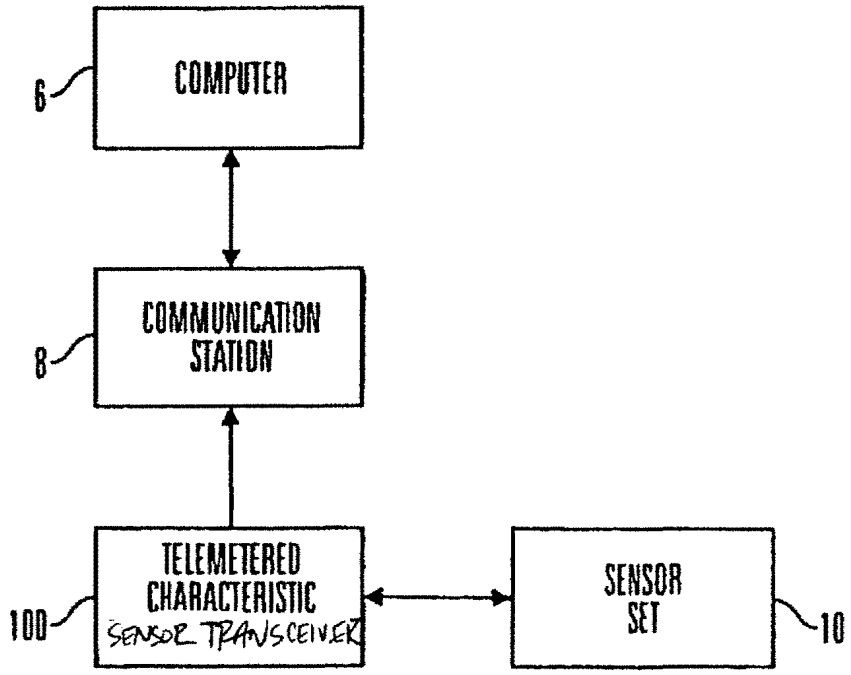
COMPUTER
6
COMMUNICATION STATION
8
TELEMETERED CHARACTERISTIC SENSOR TRANSCEIVER
100
SENSOR SET
10

FIG. 10

FIG. 11

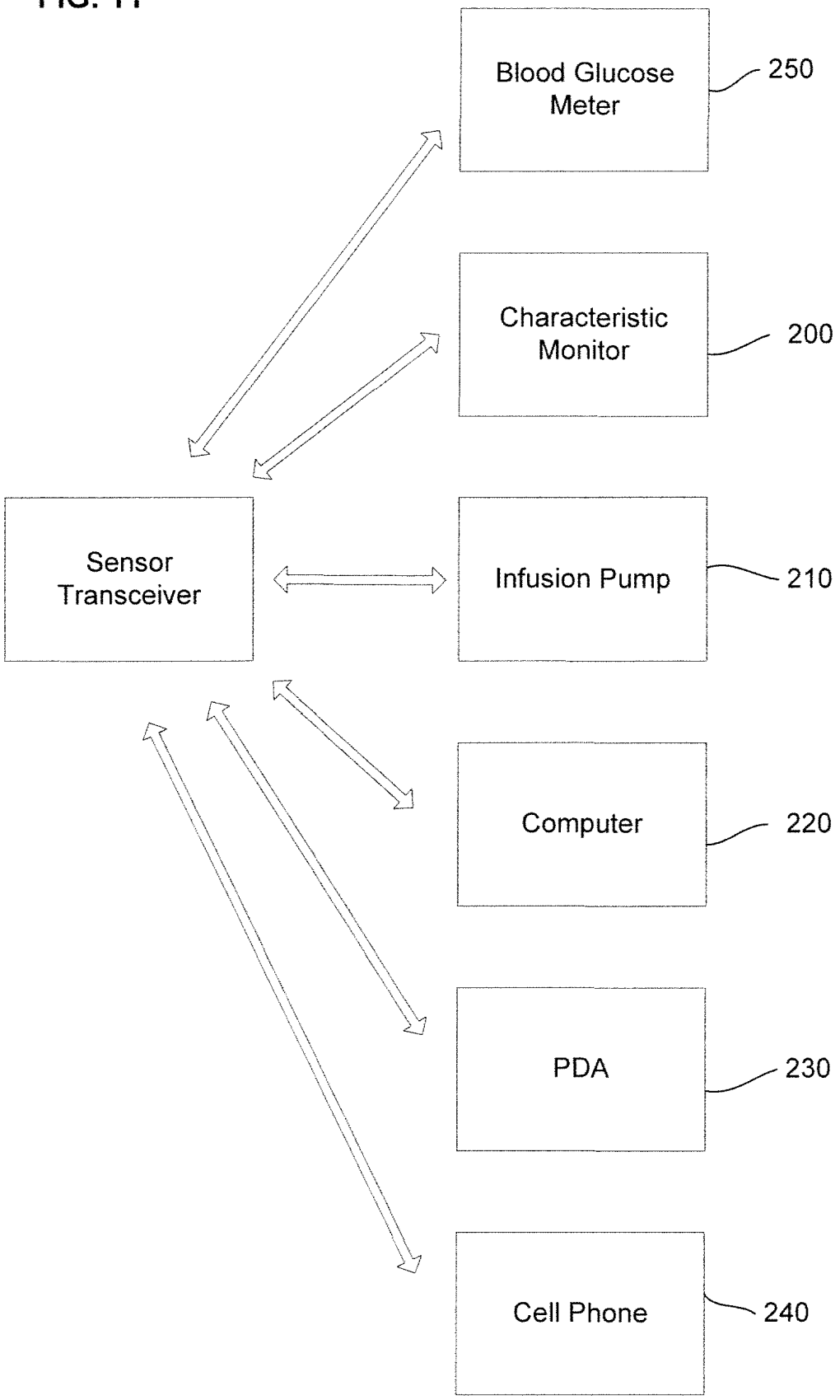
Blood Glucose Meter
250
Characteristic Monitor
200
Sensor Transceiver
Infusion Pump
210
Computer
220
PDA
230
Cell Phone
240

FIG. 12

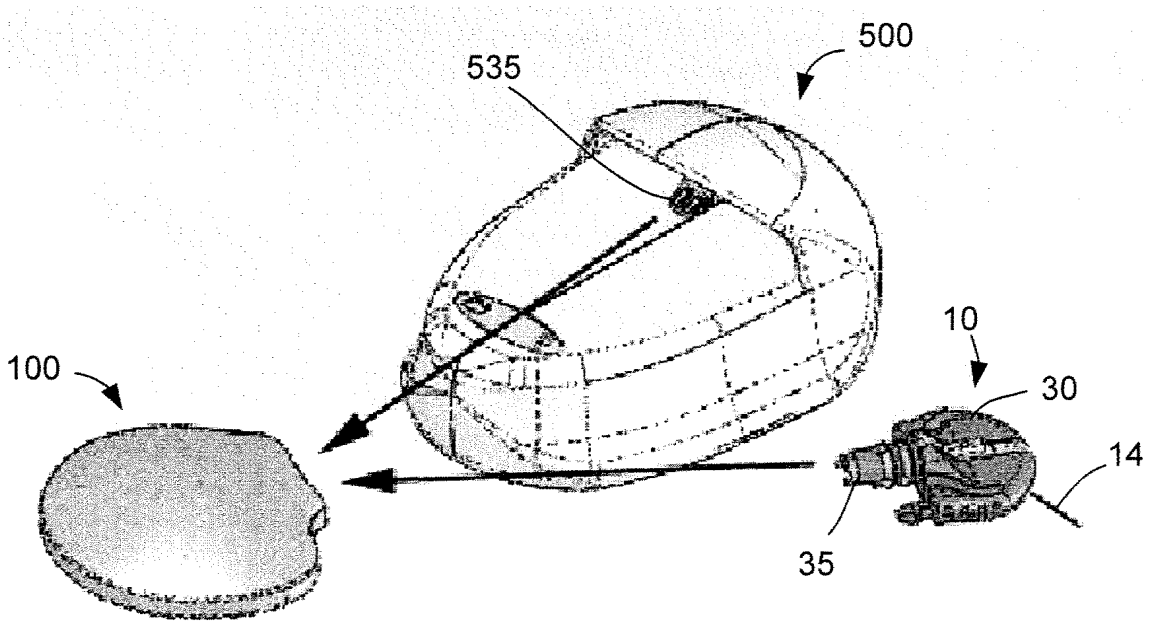
500
535
10
100
30
14
35

FIG. 13

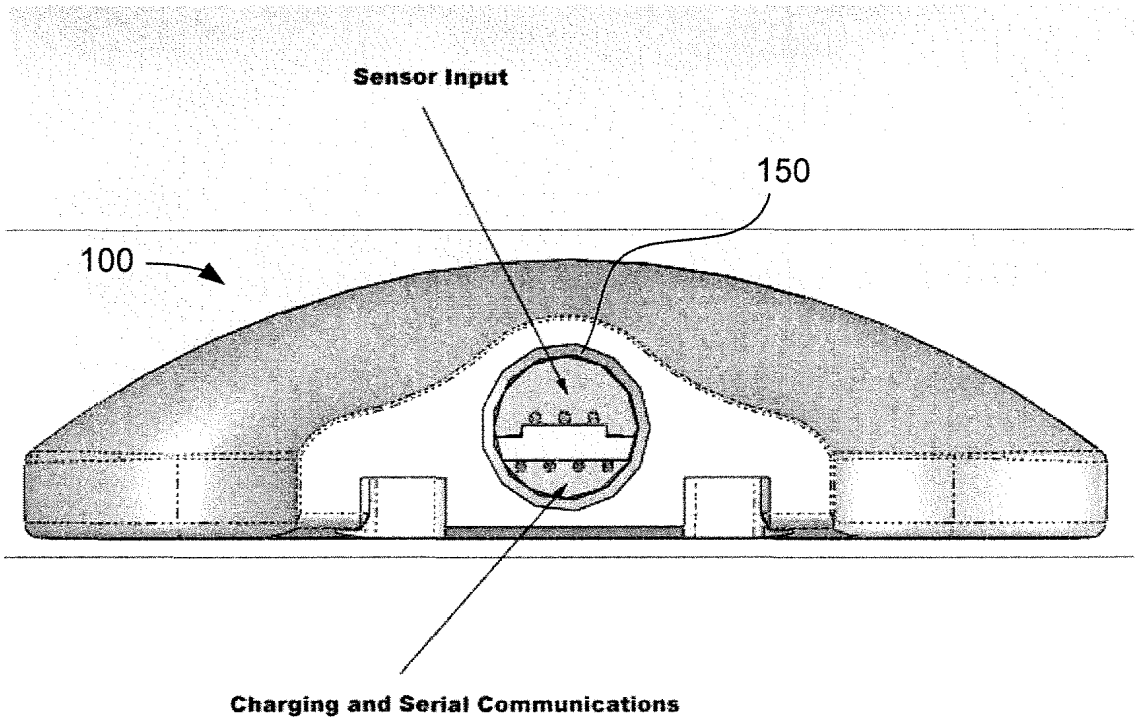
Sensor Input
150
100
Charging and Serial Communications

DECLARATION

X ORIGINAL
___ CONTINUATION-IN-PART
___ DIVISIONAL

As the below named inventor(s), I/we hereby declare that the information given herein is true and that I/we believe that I/we am/are the original and first inventor(s) of the subject matter which is claimed and for which a patent is sought for the patent application entitled:

GLUCOSE SENSOR TRANSCEIVER

This declaration is directed to:

X The attached application, or
___ Application No. _____, filed on _____,
___ Application No. _____, filed on _____, as amended on _____ (if applicable)

and for which a patent is sought, and that my residence, mailing address and citizenship are as stated below next to my name.

I/we acknowledge the duty to disclose to the United States Patent and Trademark Office all information known to me/us to be material to patentability as defined in 37 CFR 1.56, including for continuation-in-part applications, material information which became available between the filing date of the prior application and the national or PCT International filing date of the continuation-in-part application.

I/we have reviewed and understand the contents of the above-identified application, including the claims, as amended by any amendment specifically referred to above.

I/we hereby claim foreign priority benefits under 35 U.S.C. 119(a)-(d) or (f), or 365(b) of any foreign application(s) for patent, inventor's or plant breeder's rights certificate(s), or 365(a) of any PCT international application which designated at least one country other than the United States of America, listed below and have also identified below, any foreign application for patent, inventor's or plant breeder's rights certificate(s), or any PCT international application having a filing date before that of the application on which priority is claimed.

PRIOR FOREIGN APPLICATION(S)

COUNTRY	APPLICATION NUMBER	FOREIGN FILING DATE Month Day Year	CERTIFIED COPY	PRIORITY CLAIMED UNDER 35 U.S.C. 119
US	60/976,886	October 2, 2007	YES ___ NO X	YES X NO ___

I/we hereby claim the benefit under Title 35, United States Code, §120 of any United States application(s) listed below and, insofar as the subject matter of each of the claims of this application is not disclosed in the prior United States application in the manner provided by the first paragraph of Title 35, United States Code, §112, I/we acknowledge the duty to disclose material information as defined in Title 37, Code of Federal Regulations, §1.56 which occurred between the filing date of the prior application and the national or PCT international filing date of this application.

(Application Number)	(Filing Date)	(Status)

Direct all correspondence to:

Jonathan Y. Kang
LEE, HONG, DEGERMAN, KANG & SCHMADEKA
801 South Figueroa Street, Twelfth Floor
Los Angeles, California 90017

Customer Number: 035884

Direct telephone calls to:

Jonathan Y. Kang
Telephone: (213) 623-2221
Facsimile: (213) 623-2211

All statements made herein of my/our own knowledge are true, all statements made herein on information and belief are believed to be true, and further that these statements were made with the knowledge that willful false statements and the like are punishable by fine or imprisonment, or both, under Title 18, United States Code, §1001, and may jeopardize the validity of the application or any patent issuing thereon.

Name of first inventor	Himanshu Patel
Residence	Northridge, California
Citizenship	United States
Post Office Address	9041 Rathburn Avenue Northridge, California 91325
Inventor's signature	
Date	03/18/08

Name of second inventor	Wayne A. Morgan
Residence	Northridge, California
Citizenship	United States
Post Office Address	17524 Prairie Street Northridge, California 91325
Inventor's signature	
Date	

Name of third inventor	Edward Chernoff
Residence	Frazier Park, California
Citizenship	United States
Post Office Address	P.O. Box 329 Frazier Park, California 93225
Inventor's signature	
Date	

Name of fourth inventor	John J. Mastrototaro
Residence	Los Angeles, California
Citizenship	United States
Post Office Address	11099 Ophir Drive, #402 Los Angeles, California 90024
Inventor's signature	
Date	

Name of first inventor	Himanshu Patel
Residence	Northridge, California
Citizenship	United States
Post Office Address	9041 Rathburn Avenue Northridge, California 91325
Inventor's signature	
Date	

Name of second inventor	Wayne A. Morgan
Residence	Northridge, California
Citizenship	United States
Post Office Address	17524 Prairie Street Northridge, California 91325
Inventor's signature	Wayne A Morgan
Date	3/19/2008

Name of third inventor	Edward Chernoff
Residence	Frazier Park, California
Citizenship	United States
Post Office Address	P.O. Box 329 Frazier Park, California 93225
Inventor's signature	
Date	3/24/2008

Name of fourth inventor	John J. Mastrototaro
Residence	Los Angeles, California
Citizenship	United States
Post Office Address	11099 Ophir Drive, #402 Los Angeles, California 90024
Inventor's signature	
Date	3/19/08

PATENT
Attorney's Docket No.: 2164-3003

IN THE UNITED STATES PATENT AND TRADEMARK OFFICE

In re Application of:	)	
Himanshu Patel et al.	)	Group Art Unit: Unknown
Serial No.: Unassigned	)	
Filed: Herewith	)	Examiner: Unknown
For: GLUCOSE SENSOR TRANSCEIVER	)	
	)	

POWER OF ATTORNEY BY ASSIGNEE
AND EXCLUSION OF INVENTOR UNDER RULE 3.71

Commissioner for Patents
P.O. Box 1450
Alexandria, VA 22313-1450

Dear Sir:

The undersigned **Eric P. Geismar** is a representative authorized to sign on behalf of the assignee of the entire interest in the above-identified subject application, **MEDTRONIC MINIMED, INC.** and hereby appoints:

Paul H. Kovelman, Reg. No. 35,228
Richard K. Yoon, Reg. No. 42,247
Ajit S. Narang, Reg. No. 55,480

and all of the firm of Lee, Hong, Degerman, Kang & Schmadeka:

Jonathan Y. Kang, Reg. No. 38,199
Lew Edward V. Macapagal, Reg. No. 55,416
Craig W. Schmoyer, Reg. No. 51,007
Jeffrey J. Lotspeich, Reg. No. 45,737
Richard C. Salfelder, Reg. No. 51,127
F. Jason Far-hadian, Reg. No. 42,523
Vernon R. Yancy, Reg. No. 52,379

to prosecute this application and to transact all business in the United States Patent and Trademark Office connected therewith, said appointment to be to the exclusion of the inventor and his attorney in accordance with the provisions of Rule 32 of the Patent Office Rules of Practice.

MEDTRONIC MINIMED, INC., per 37 C.F.R. §3.73(b), certifies that the evidentiary documents with respect to its ownership have been reviewed and that to the best of the undersign's knowledge and belief, title is in the assignee seeking this action.

MEDTRONIC MINIMED, INC., declares that 100% ownership is established by an assignment to be in the Regular Utility Patent Application, and that the Inventors are under an obligation to assign the application to **MEDTRONIC MINIMED, INC**.

Please direct all telephone calls to Jonathan Y. Kang at (213) 623-2221 and all correspondence relative to said application to the following address:

Jonathan Y. Kang
LEE, HONG, DEGERMAN, KANG & SCHMADEKA
801 South Figueroa Street, Twelfth Floor
Los Angeles, California 90017
Customer Number: 035884

ASSIGNEE: **MEDTRONIC MINIMED, INC.**

Date: 3/25/2008

Signature: _____
Eric P. Geismar
Title: Vice President and Senior Counsel
Address: 18000 Devonshire Street
Northridge, CA 91325-1219

Electronic Patent Application Fee Transmittal

Application Number:	
Filing Date:	
Title of Invention:	GLUCOSE SENSOR TRANSCEIVER
First Named Inventor/Applicant Name:	Himanshu Patel
Filer:	Lew Edward V. Macapagal/Martha Martinez
Attorney Docket Number:	2164-3003

Filed as Large Entity

Utility Filing Fees

Description	Fee Code	Quantity	Amount	Sub-Total in USD($)
Basic Filing:				
Utility application filing	1011	1	310	310
Utility Search Fee	1111	1	510	510
Utility Examination Fee	1311	1	210	210
Pages:				
Claims:				
Claims in excess of 20	1202	9	50	450
Miscellaneous-Filing:				
Petition:				

Description	Fee Code	Quantity	Amount	Sub-Total in USD($)
Patent-Appeals-and-Interference:				
Post-Allowance-and-Post-Issuance:				
Extension-of-Time:				
Miscellaneous:				
			Total in USD ($)	**1480**

Electronic Acknowledgement Receipt

EFS ID:	3062069
Application Number:	12056651
International Application Number:	
Confirmation Number:	9941
Title of Invention:	GLUCOSE SENSOR TRANSCEIVER
First Named Inventor/Applicant Name:	Himanshu Patel
Customer Number:	35884
Filer:	Lew Edward V. Macapagal/Martha Martinez
Filer Authorized By:	Lew Edward V. Macapagal
Attorney Docket Number:	2164-3003
Receipt Date:	27-MAR-2008
Filing Date:	
Time Stamp:	14:59:00
Application Type:	Utility under 35 USC 111(a)

Payment information:

Submitted with Payment	yes
Payment Type	Deposit Account
Payment was successfully received in RAM	$1480
RAM confirmation Number	216
Deposit Account	502290
Authorized User	

The Director of the USPTO is hereby authorized to charge indicated fees and credit any overpayment as follows:

Charge any Additional Fees required under 37 C.F.R. Section 1.17 (Patent application and reexamination processing fees)

File Listing:

Document Number	Document Description	File Name	File Size(Bytes) /Message Digest	Multi Part /.zip	Pages (if appl.)
1		Application-2164-3003.pdf	3066276 7609a484ffff26cfa68cf658fd7148de0016e319	yes	47

Multipart Description/PDF files in .zip description

Document Description	Start	End
Miscellaneous Incoming Letter	1	2
Specification	3	29
Claims	30	34
Abstract	35	35
Drawings-only black and white line drawings	36	42
Oath or Declaration filed	43	45
Power of Attorney	46	47

Warnings:

Information:

2	Fee Worksheet (PTO-06)	fee-info.pdf	8465 76194d7c623418bb05fc77230db0685421c08c4e	no	2

Warnings:

Information:

Total Files Size (in bytes):	3074741

This Acknowledgement Receipt evidences receipt on the noted date by the USPTO of the indicated documents, characterized by the applicant, and including page counts, where applicable. It serves as evidence of receipt similar to a Post Card, as described in MPEP 503.

New Applications Under 35 U.S.C. 111
If a new application is being filed and the application includes the necessary components for a filing date (see 37 CFR 1.53(b)-(d) and MPEP 506), a Filing Receipt (37 CFR 1.54) will be issued in due course and the date shown on this Acknowledgement Receipt will establish the filing date of the application.

National Stage of an International Application under 35 U.S.C. 371
If a timely submission to enter the national stage of an international application is compliant with the conditions of 35 U.S.C. 371 and other applicable requirements a Form PCT/DO/EO/903 indicating acceptance of the application as a national stage submission under 35 U.S.C. 371 will be issued in addition to the Filing Receipt, in due course.

New International Application Filed with the USPTO as a Receiving Office
If a new international application is being filed and the international application includes the necessary components for an international filing date (see PCT Article 11 and MPEP 1810), a Notification of the International Application Number and of the International Filing Date (Form PCT/RO/105) will be issued in due course, subject to prescriptions concerning national security, and the date shown on this Acknowledgement Receipt will establish the international filing date of the application.

IN THE UNITED STATES PATENT AND TRADEMARK OFFICE

In re application of: Himanshu Patel, Wayne A. Morgan, Edward Chernoff, and John J. Mastrototaro	Art Unit:
Serial No:	Examiner:
Filed: Herewith	Confirmation No.:
For: GLUCOSE SENSOR TRANSCEIVER	

Commissioner for Patents
P.O. Box 1450
Alexandria, VA 22313-1450

Dear Sir:

Transmitted herewith for filing is the patent application identified above.

☒ 32 pages of specification and 1 page of the ABSTRACT of the invention are enclosed.

☒ 7 sheets of drawings (☒ formal ☐ informal) are enclosed.

☒ An assignment of the invention to MEDTRONIC MINIMED, INC. ☐ is enclosed ☒ will follow.

☒ Declaration and Power of Attorney ☒ is enclosed ☐ will follow.

CALCULATION OF FEES								
ITEM		TOTAL NO. OF CLAIMS		NO. OF CLAIMS OVER BASE	LG/SM $ ENTITY FEE		$ AMOUNT	$ FEE
A	TOTAL CLAIMS FEE	29	-20	9	LG=$50 SM=$25	$ 50	$450	$450
B	INDEPENDENT CLAIMS FEE*	1	-3	0	LG=$200 SM=$100	$ 200	$ 0	$ 0
C	SUBTOTAL - ADDITIONAL CLAIMS FEE (ADD FINAL COLUMN IN LINES A + B)							$ 450
D	MULTIPLE-DEPENDENT CLAIMS FEE				LARGE ENTITY FEE = $360 SMALL ENTITY FEE = $180			$ 0
E	BASIC FILING FEE				LARGE ENTITY FEE = $310 SMALL ENTITY FEE = $150			$ 310
F	SEARCH FEE				LARGE ENTITY FEE = $510 SMALL ENTITY FEE = $250			$ 510
G	EXAMINATION FEE				LARGE ENTITY FEE = $210 SMALL ENTITY FEE = $100			$ 210
H	APPLICATION SIZE FEE (If the specification and drawings exceed 100 sheets of paper, for each additional 50 sheets or fraction thereof.)				LARGE ENTITY FEE = $250 SMALL ENTITY FEE = $125			$ 0
I	TOTAL FILING FEE (ADD TOTALS FOR LINES C, D, E, F, G AND H)							$1,480
J	ASSIGNMENT RECORDING FEE						$ 40	$ 0
	*LIST INDEPENDENT CLAIMS 1							

☒ The Commissioner is hereby authorized to charge the filing fee and any deficiency for the following fees associated with this communication or credit any overpayment to **Deposit Account No. 502290**. A copy of this sheet is enclosed.

☒ The amount of $1,480 to cover the total filing fee.

☒ Any additional filing fees required under 37 C.F.R. § 1.16

☒ Any patent application processing fees under 37 C.F.R. § 1.17

Respectfully submitted,

Lee, Hong, Degerman, Kang & Schmadeka

Date: March 27, 2008

By: _____

Lew Edward V. Macapagal
Registration No. 55,416
Attorney for Applicant

Customer No. 35884

Filing Date: 03/27/08

Approved for use through 7/31/2006. OMB 0651-0032
U.S. Patent and Trademark Office; U.S. DEPARTMENT OF COMMERCE

Under the Paperwork Reduction Act of 1995, no persons are required to respond to a collection of information unless it displays a valid OMB control number.

PATENT APPLICATION FEE DETERMINATION RECORD

Substitute for Form PTO-875

Application or Docket Number: 12/056,651

APPLICATION AS FILED – PART I

FOR	(Column 1) NUMBER FILED	(Column 2) NUMBER EXTRA	SMALL ENTITY RATE ($)	SMALL ENTITY FEE ($)	OR	OTHER THAN SMALL ENTITY RATE ($)	OTHER THAN SMALL ENTITY FEE ($)
BASIC FEE (37 CFR 1.16(a), (b), or (c))	N/A	N/A	N/A			N/A	310
SEARCH FEE (37 CFR 1.16(k), (i), or (m))	N/A	N/A	N/A			N/A	510
EXAMINATION FEE (37 CFR 1.16(o), (p), or (q))	N/A	N/A	N/A			N/A	210
TOTAL CLAIMS (37 CFR 1.16(i))	29 minus 20 =	9	X$ 25		OR	X$50	450
INDEPENDENT CLAIMS (37 CFR 1.16(h))	1 minus 3 =	* 0	X$105			X$210	0
APPLICATION SIZE FEE (37 CFR 1.16(s))							
MULTIPLE DEPENDENT CLAIM PRESENT (37 CFR 1.16(j))			180			370	
			TOTAL	0		TOTAL	1480

* If the difference in column 1 is less than zero, enter "0" in column 2.

APPLICATION AS AMENDED – PART II

AMENDMENT A

	(Column 1) CLAIMS REMAINING AFTER AMENDMENT		(Column 2) HIGHEST NUMBER PREVIOUSLY PAID FOR	(Column 3) PRESENT EXTRA	SMALL ENTITY RATE ($)	SMALL ENTITY ADDI-TIONAL FEE ($)	OR	OTHER THAN SMALL ENTITY RATE ($)	OTHER THAN SMALL ENTITY ADDI-TIONAL FEE ($)
Total (37 CFR 1.16(i))	*	Minus	**	=	x =		OR	x =	
Independent (37 CFR 1.16(h))	*	Minus	***	=	x =		OR	x =	
Application Size Fee (37 CFR 1.16(s))									
FIRST PRESENTATION OF MULTIPLE DEPENDENT CLAIM (37 CFR 1.16(j))					N/A		OR	N/A	
					TOTAL ADD'T FEE		OR	TOTAL ADD'T FEE	

AMENDMENT B

	(Column 1) CLAIMS REMAINING AFTER AMENDMENT		(Column 2) HIGHEST NUMBER PREVIOUSLY PAID FOR	(Column 3) PRESENT EXTRA	RATE ($)	ADDI-TIONAL FEE ($)	OR	RATE ($)	ADDI-TIONAL FEE ($)
Total (37 CFR 1.16(i))	*	Minus	**	=	x =		OR	x =	
Independent (37 CFR 1.16(h))	*	Minus	***	=	x =		OR	x =	
Application Size Fee (37 CFR 1.16(s))									
FIRST PRESENTATION OF MULTIPLE DEPENDENT CLAIM (37 CFR 1.16(j))					N/A		OR	N/A	
					TOTAL ADD'T FEE		OR	TOTAL ADD'T FEE	

* If the entry in column 1 is less than the entry in column 2, write "0" in column 3.

** If the "Highest Number Previously Paid For" IN THIS SPACE is less than 20, enter "20".

*** If the "Highest Number Previously Paid For" IN THIS SPACE is less than 3, enter "3".
The "Highest Number Previously Paid For" (Total or Independent) is the highest number found in the appropriate box in column 1.

This collection of information is required by 37 CFR 1.16. The information is required to obtain or retain a benefit by the public which is to file (and by the USPTO to process) an application. Confidentiality is governed by 35 U.S.C. 122 and 37 CFR 1.14. This collection is estimated to take 12 minutes to complete, including gathering, preparing, and submitting the completed application form to the USPTO. Time will vary depending upon the individual case. Any comments on the amount of time you require to complete this form and/or suggestions for reducing this burden, should be sent to the Chief Information Officer, U.S. Patent and Trademark Office, U.S. Department of Commerce, P.O. Box 1450, Alexandria, VA 22313-1450. DO NOT SEND FEES OR COMPLETED FORMS TO THIS ADDRESS. **SEND TO: Commissioner for Patents, P.O. Box 1450, Alexandria, VA 22313-1450.**

If you need assistance in completing the form, call 1-800-PTO-9199 and select option 2.