US006424847B1

(12) **United States Patent**
Mastrototaro et al.

(10) **Patent No.: US 6,424,847 B1**
(45) **Date of Patent: Jul. 23, 2002**

(54) **GLUCOSE MONITOR CALIBRATION METHODS**

(75) Inventors: **John J. Mastrototaro**, Los Angeles; **Todd M. Gross**, Saugus; **John J. Shin**, Glendale, all of CA (US)

(73) Assignee: **Medtronic Minimed, Inc.**, Northridge, CA (US)

(*) Notice: Subject to any disclaimer, the term of this patent is extended or adjusted under 35 U.S.C. 154(b) by 0 days.

(21) Appl. No.: **09/511,580**

(22) Filed: **Feb. 23, 2000**

Related U.S. Application Data

(60) Provisional application No. 60/121,584, filed on Feb. 25, 1999.

(51) **Int. Cl.**[7] **A61B 5/00**

(52) **U.S. Cl.** **600/316**; 600/365; 600/322

(58) **Field of Search** 600/300–301, 600/309–310, 316, 322–324, 345, 347, 364–365, 331; 604/504; 436/14; 128/903–904

(56) **References Cited**

U.S. PATENT DOCUMENTS

4,786,394	A	*	11/1988	Enzer et al.	204/401
5,068,536	A	*	11/1991	Rosenthal	250/341
5,108,819	A		4/1992	Heller et al.	428/195
5,391,250	A		2/1995	Cheney, II et al.	156/268
5,497,772	A	*	3/1996	Schulman et al.	600/317
5,507,288	A	*	4/1996	Bocker et al.	600/322
5,777,060	A		7/1998	Van Antwerp	528/28
5,786,439	A		7/1998	Van Antwerp et al.	528/77
5,813,403	A	*	9/1998	Soller et al.	600/310
5,830,133	A	*	11/1998	Osten et al.	600/322
5,885,211	A	*	3/1999	Eppstein et al.	600/309
5,965,380	A		10/1999	Heller et al.	435/14
6,049,727	A	*	4/2000	Crothall	600/310
6,088,608	A	*	7/2000	Schulman et al.	600/345

FOREIGN PATENT DOCUMENTS

WO	9856293	12/1998
WO	9945375	9/1999
WO	9945387	9/1999
WO	9956613	11/1999

OTHER PUBLICATIONS

Reach, G. et al., "A Method for Evaluating in vivo the Functional Characteristics of Glucose Sensors", *Biosensors 2* (Elsevier Applied Science Publishers Ltd., England—1986), pp. 211–220.

Koudelka, M. et al., "Planar Amperometric Enzyme–Based Glucose Microelectode", *Sensors and Actuators, 18* (Elsevier Sequoia, The Netherlands—1989), pp. 157–165.

Gernet, S. et al., "A Planar Glucose Enzyme Electrode", *Sensors and Actuators, 17* (Elsevier Sequoia, The Netherlands—1989), pp. 537–540.

(List continued on next page.)

Primary Examiner—Eric F. Winakur
Assistant Examiner—Matthew Kremer
(74) *Attorney, Agent, or Firm*—Medtronic Minimed, Inc.

(57) **ABSTRACT**

A method of calibrating glucose monitor data includes collecting the glucose monitor data over a period of time at predetermined intervals. It also includes obtaining at least two reference glucose values from a reference source that temporally correspond with the glucose monitor data obtained at the predetermined intervals. Also included is calculating the calibration characteristics using the reference glucose values and the corresponding glucose monitor data to regress the obtained glucose monitor data. And calibrating the obtained glucose monitor data using the calibration characteristics is included. In preferred embodiments, the reference source is a blood glucose meter, and the at least two reference glucose values are obtained from blood tests. In additional embodiments, the calculation of the calibration characteristics is obtained using linear regression and in particular embodiments, least squares linear regression. Alternatively, the calculation of the calibration characteristics is obtained using non-linear regression.

51 Claims, 10 Drawing Sheets

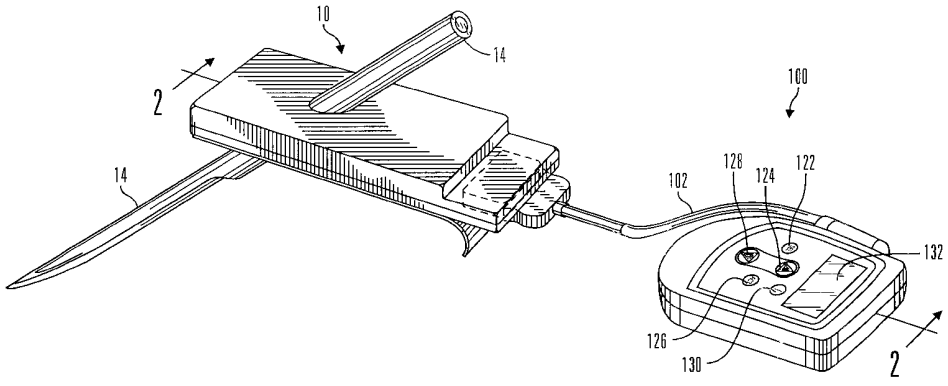

DEXCOM
EXHIBIT 1030

OTHER PUBLICATIONS

Velho, G. et al., "Strategies for calibrating a subcutaneous glucose sensor", *Biomed. Biochim. Acta 48* (1989), pp. 957–964.

Koudelka, M. et al., "In–vivo Behaviour of Hypodermically Implanted Microfabricated Glucose Sensors" *Biosensors & Bioelectronics 6* (Elsevier Science Publishers Ltd., England—1991), pp. 31–36.

Mastrototaro, John J. et al., "An electroenzymatic glucose sensor fabricated on a flexible substrate", *Sensors and Actuators B. 5* (Elsevier Sequoia—1991), pp. 139–144.

Rebrin, Kerstin et al., "Subcutaneous glucose predicts plasma glucose independent of insulin: implications for continuous monitoring", *The American Physiological Society* (1999), pp. E561–E571.

* cited by examiner

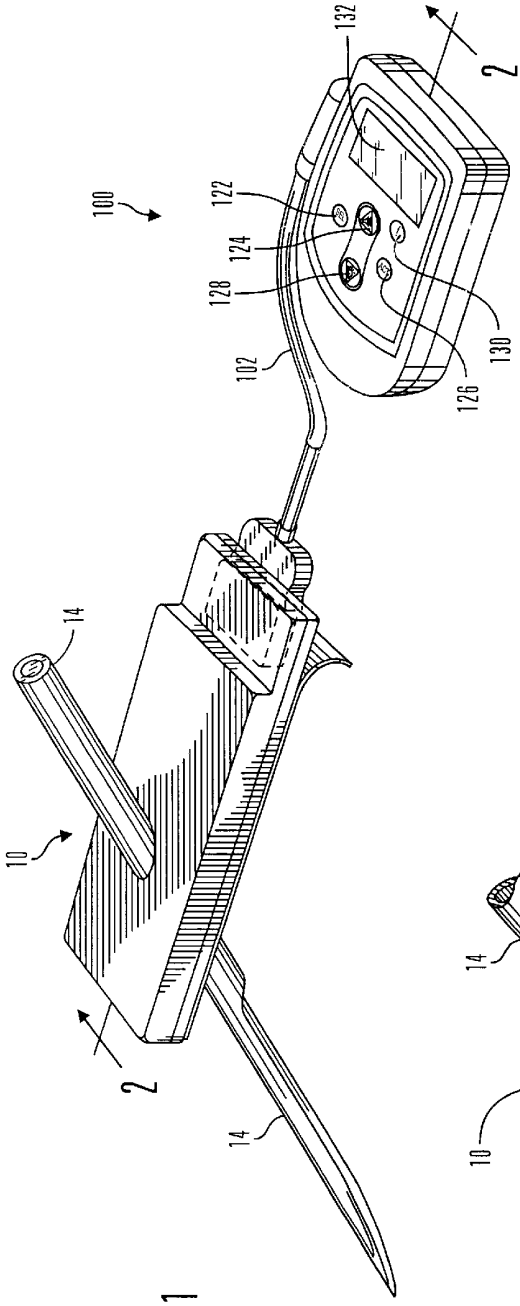
100
122
124
128
132
2
102
126
130
14
10
2
14

FIG. 1

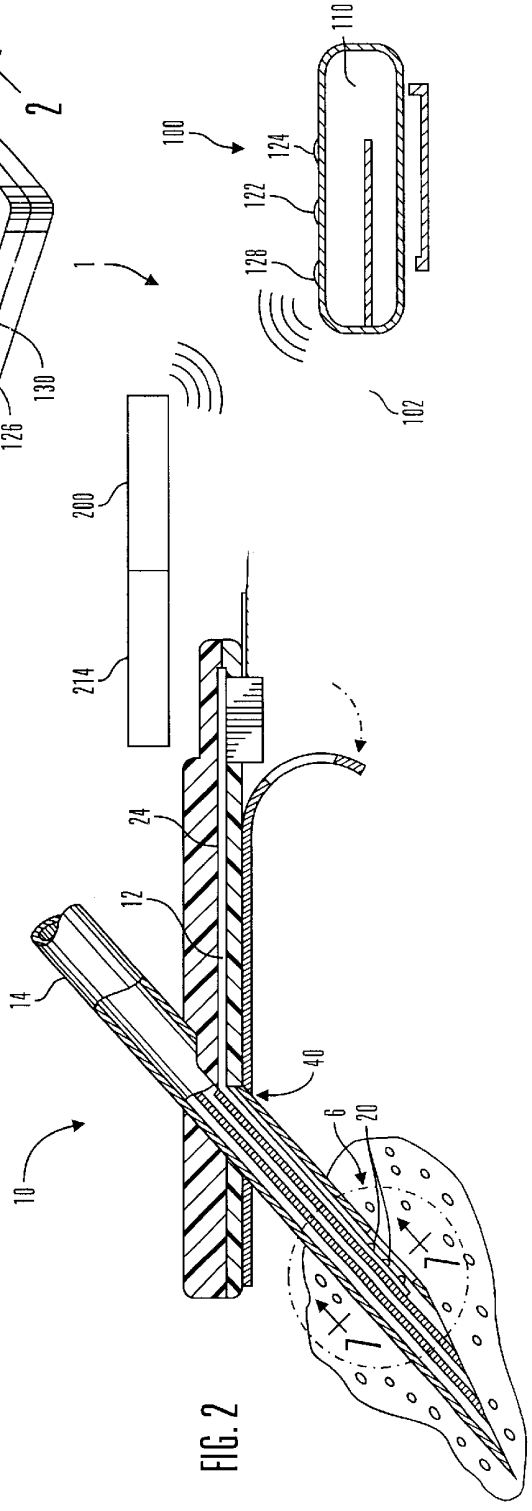
110
100
124
122
128
1
102
200
214
24
12
14
40
6
20
10

FIG. 2

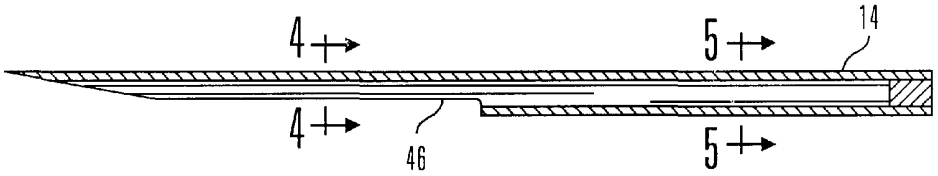

FIG. 3

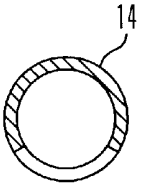

FIG. 4

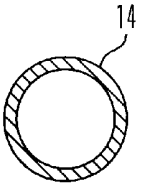

FIG. 5

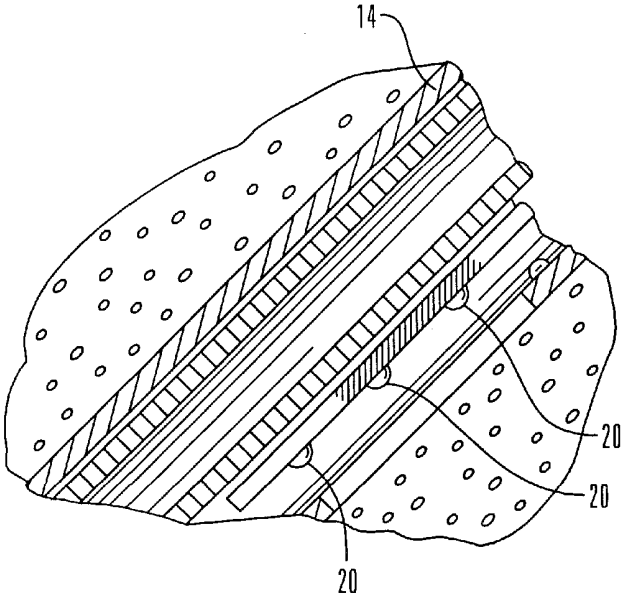

FIG. 6

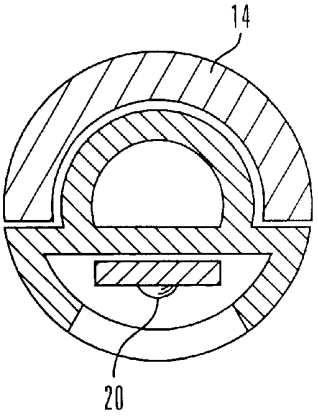

FIG. 7

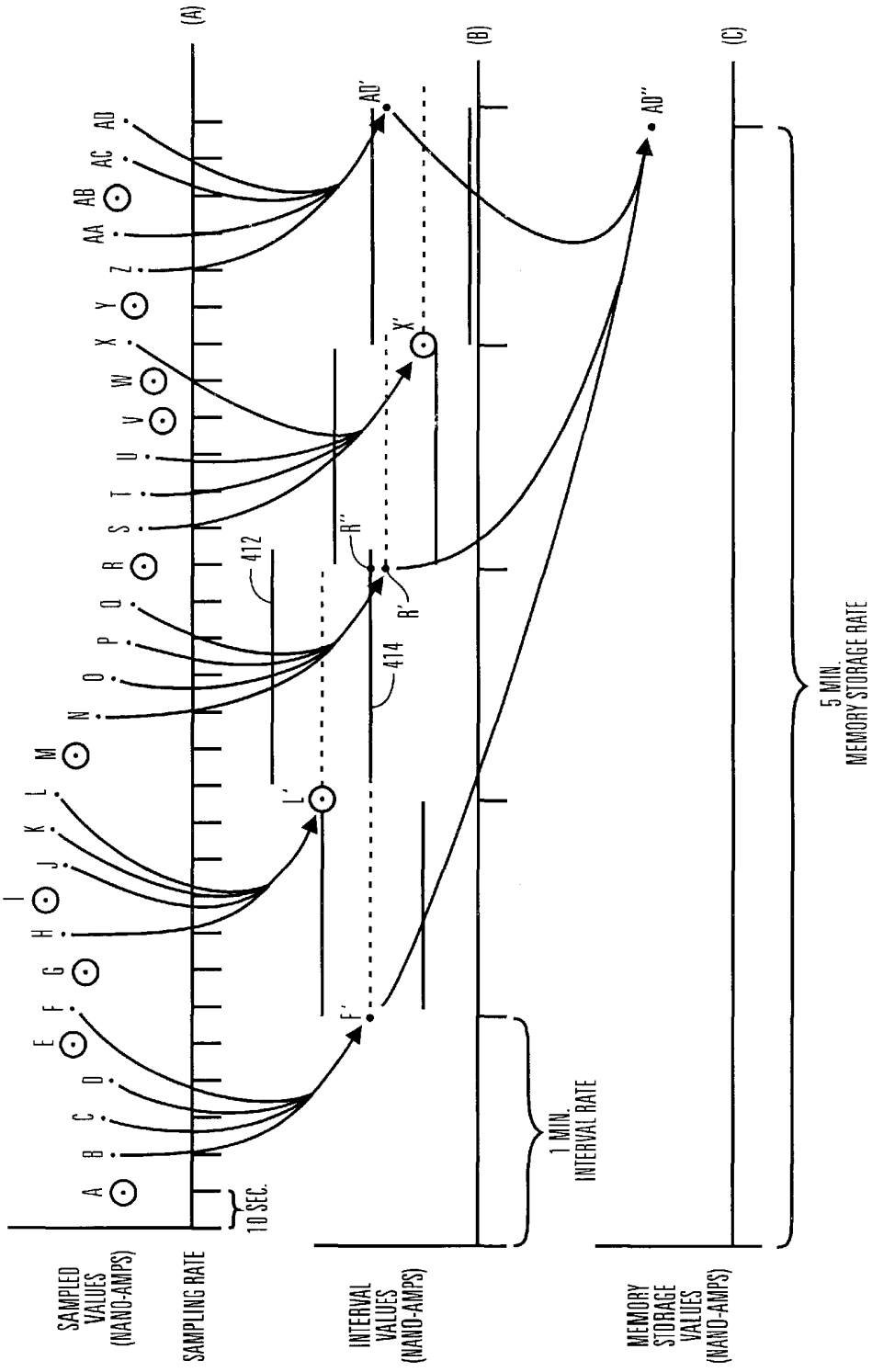
(A)
(B)
(C)
SAMPLED VALUES (NANO-AMPS)
SAMPLING RATE
10 SEC.
INTERVAL VALUES (NANO-AMPS)
1 MIN. INTERVAL RATE
MEMORY STORAGE VALUES (NANO-AMPS)
5 MIN. MEMORY STORAGE RATE
412
414
F'
L'
R'
R''
X'
AD'
AD''

FIG. 8

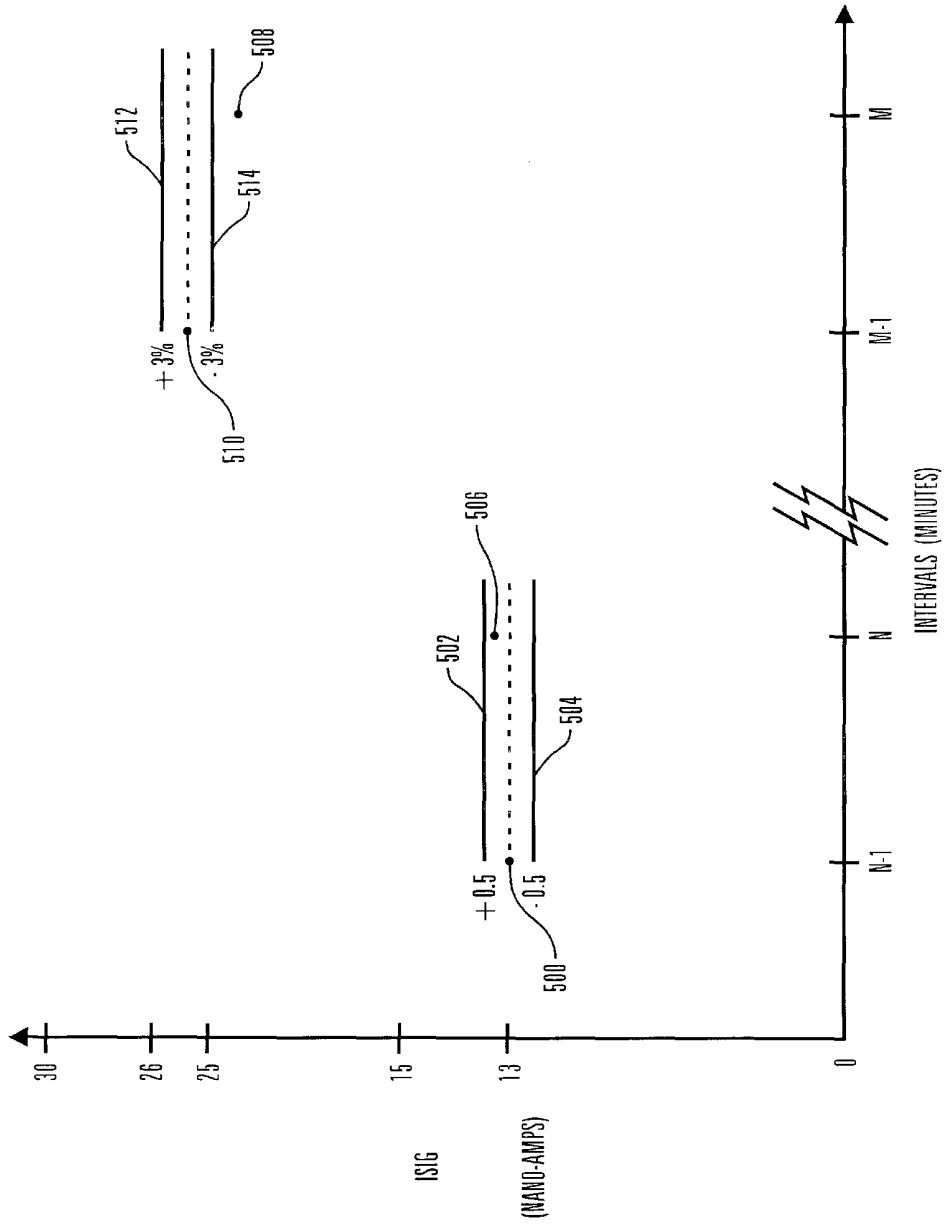
30
26
25
15
13
0
ISIG
(NANO-AMPS)
+0.5
-0.5
500
502
504
506
+3%
-3%
510
512
514
508
N-1
N
M-1
M
INTERVALS (MINUTES)

FIG. 9

FIG. 10

Microsoft Excel - P000-0010@11-59-11@7-13-1998.FDA

File Edit View Insert Format Tools Date Advanced Window Help

ARIAL 10 100%

M38

	A	B	C	D	E	F	G	H	I	J	K	L	M	N	O	P
1	PATIENT ID	SAMPLE	DATE	TIME	ISIG VALUE	VCTR	METER VALUE	SLOPE	OFFSET	VALID ISIG	SENSOR VALUE	POWER UP	POWER DOWN	SENSOR INITIALIZATION	LINK EVENT	SENSOR DISCONNECT
2	000-0000	0	7/10/98	10:53	0	-2.042										
3	000-0000	1	7/10/98	10:58	0	-2.026										SEDI
4	000-0000	2	7/10/98	11:03	0	-1.732										
5	000-0000	3	7/10/98	11:09	99.1	-0.936										
6	000-0000	4	7/10/98	11:14	19.7	-0.565										
7	000-0000	5	7/10/98	11:19	26.1	-0.598										
8	000-0000	6	7/10/98	11:24	25.7	-0.626										
9	000-0000	7	7/10/98	11:29	26	-0.643										
10	000-0000	8	7/10/98	11:34	24.9	-0.648										
11	000-0000	9	7/10/98	11:39	23.9	-0.649										
12	000-0000	10	7/10/98	11:44	23.8	-0.651										
13	000-0000	11	7/10/98	11:49	24.3	-0.658										
14	000-0000	12	7/10/98	11:54	23.9	-0.655										
15	000-0000	13	7/10/98	11:59	23	-0.652										
16	000-0000	14	7/10/98	12:04	23.3	-0.652										
17	000-0000	15	7/10/98	12:09	22.2	-0.645								ESI		
18	000-0000	16	7/10/98	12:14	22.1	-0.644	95	5.0	3	22.1	96					
19	000-0000	17	7/10/98	12:19	20.1	-0.634				20.1	86					
20	000-0000	18	7/10/98	12:24	19.9	-0.637				19.9	85					
21	000-0000	19	7/10/98	12:29	20.6	-0.645				20.6	88					
22	000-0000	20	7/10/98	12:34	20.8	-0.662				20.8	89					
23	000-0000	21	7/10/98	12:39	19.1	-0.645				19.1	81					
24	000-0000	22	7/10/98	12:44	18.2	-0.635				18.2	76					
25	000-0000	23	7/10/98	12:49	17.4	-0.633				17.4	72					
26	000-0000	24	7/10/98	12:54	16.4	-0.625				16.4	67					
27	000-0000	25	7/10/98	12:59	15.7	-0.619				15.7	64					
28	000-0000	26	7/10/98	13:04	15	-0.612				15	60					
29	000-0000	27	7/10/98	13:09	13.8	-0.602				13.8	54					
30	000-0000	28	7/10/98	13:14	13.3	-0.597				13.3	52					
31	000-0000	29	7/10/98	13:19	14.4	-0.62				14.4	57					
32	000-0000	30	7/10/98	13:24	16	-0.635				16	65					

07-11-98 / 07-12-98 / 07-13-98 / 07-14-98 / 07-15-98 / 07-16-98 / 07-17-98 / 07-18-98 \ DATE

READY NUM

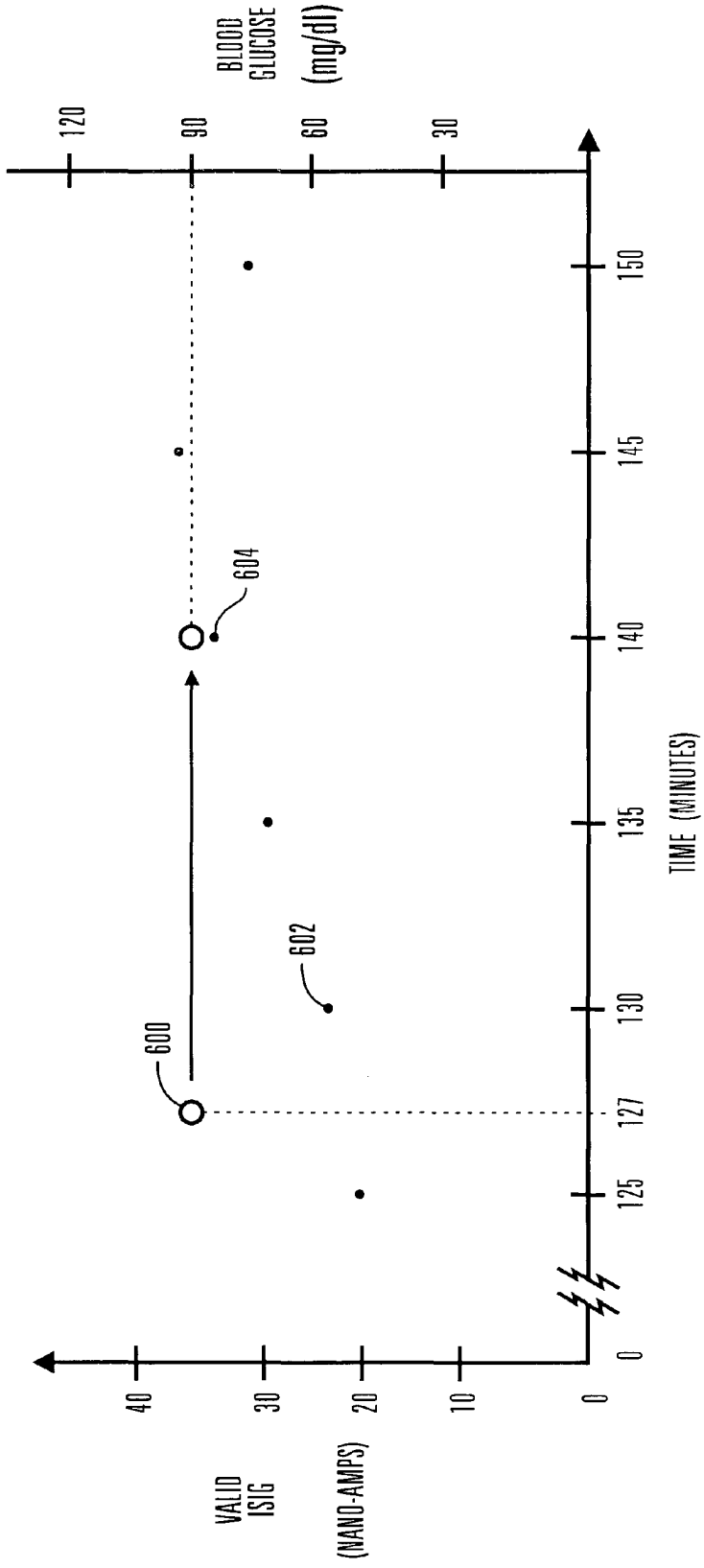
BLOOD GLUCOSE (mg/dl)
120
90
60
30
VALID ISIG (NANO-AMPS)
40
30
20
10
0
600
602
604
0
125
127
130
135
140
145
150
TIME (MINUTES)

FIG. 11

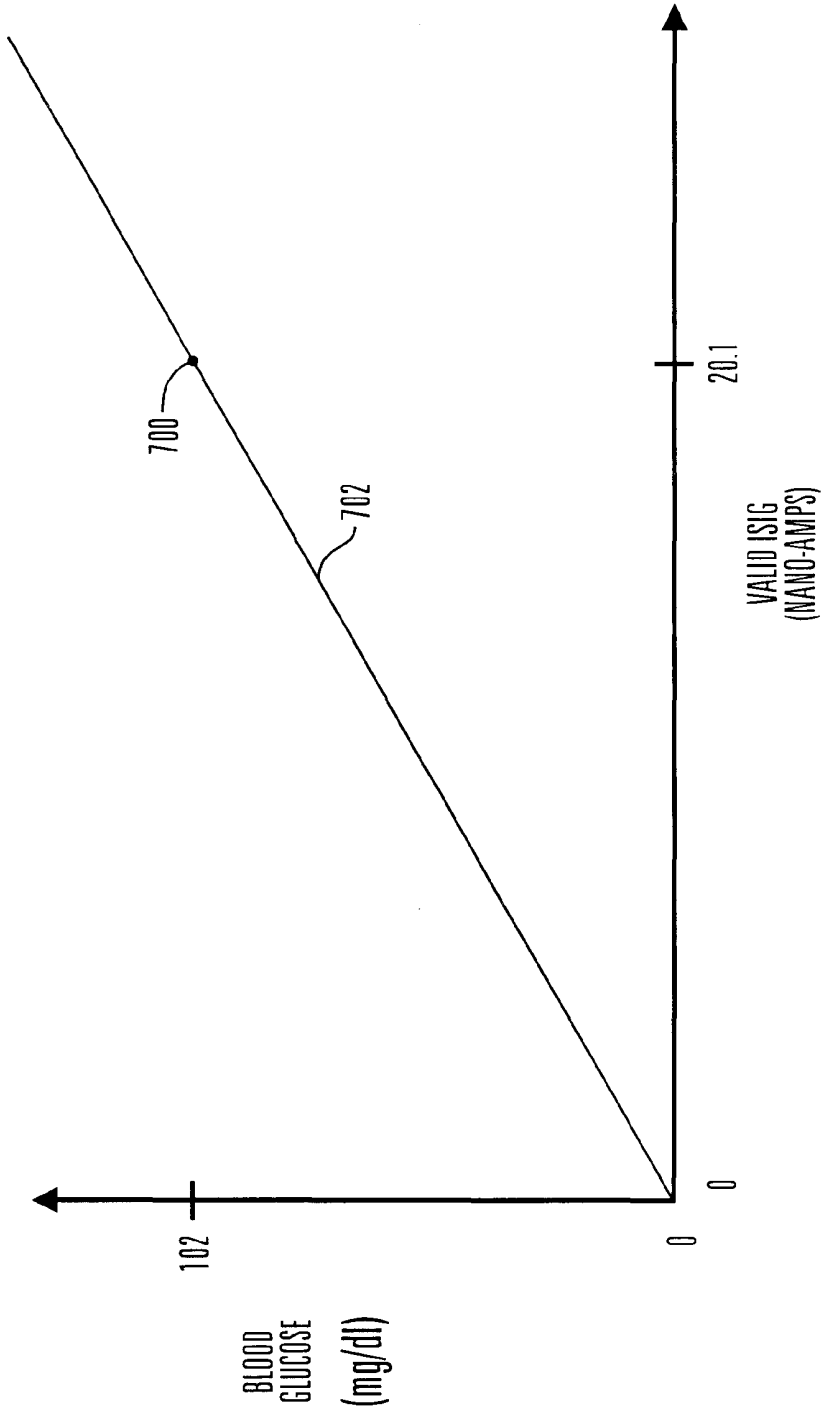

FIG. 12

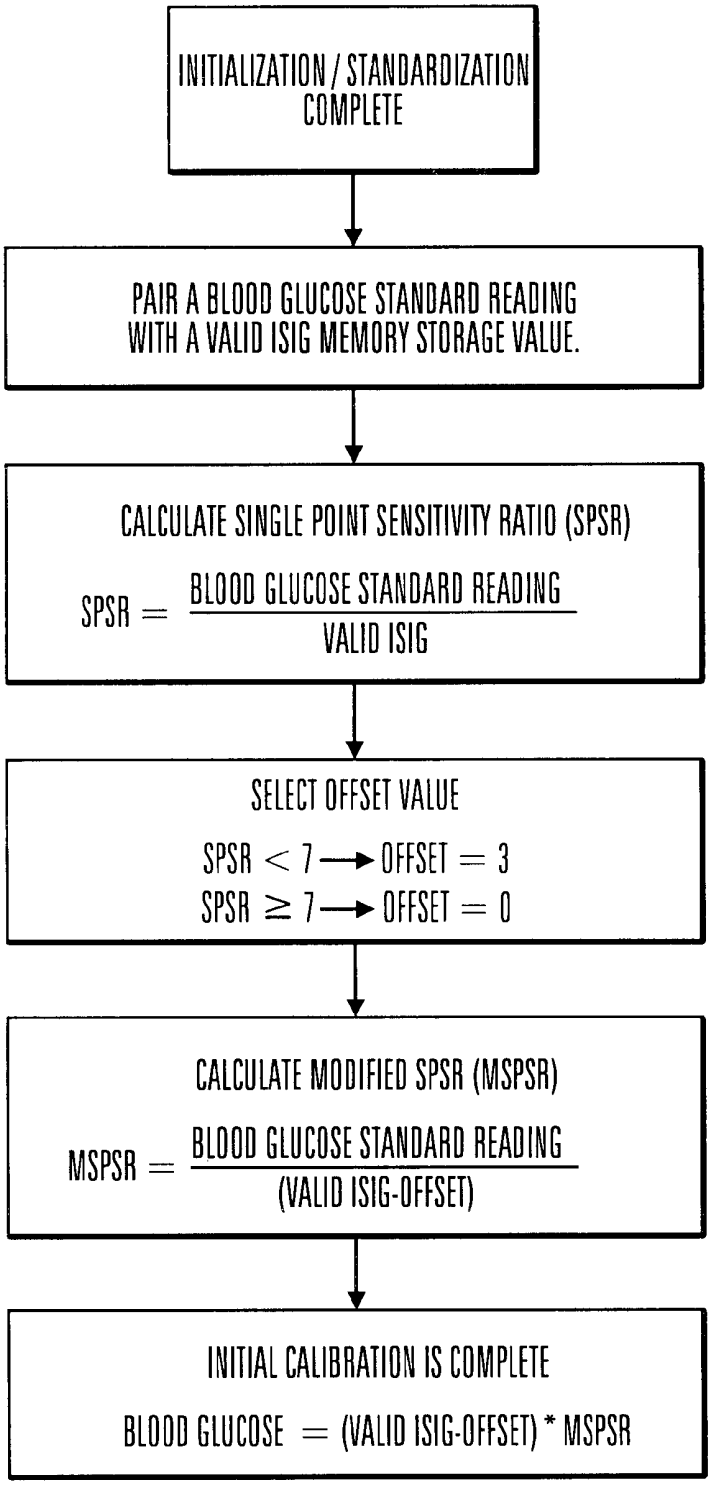
INITIALIZATION / STANDARDIZATION COMPLETE
PAIR A BLOOD GLUCOSE STANDARD READING WITH A VALID ISIG MEMORY STORAGE VALUE.
CALCULATE SINGLE POINT SENSITIVITY RATIO (SPSR)
SPSR = BLOOD GLUCOSE STANDARD READING / VALID ISIG
SELECT OFFSET VALUE
SPSR < 7 → OFFSET = 3
SPSR ≥ 7 → OFFSET = 0
CALCULATE MODIFIED SPSR (MSPSR)
MSPSR = BLOOD GLUCOSE STANDARD READING / (VALID ISIG-OFFSET)
INITIAL CALIBRATION IS COMPLETE
BLOOD GLUCOSE = (VALID ISIG-OFFSET) * MSPSR

FIG. 13

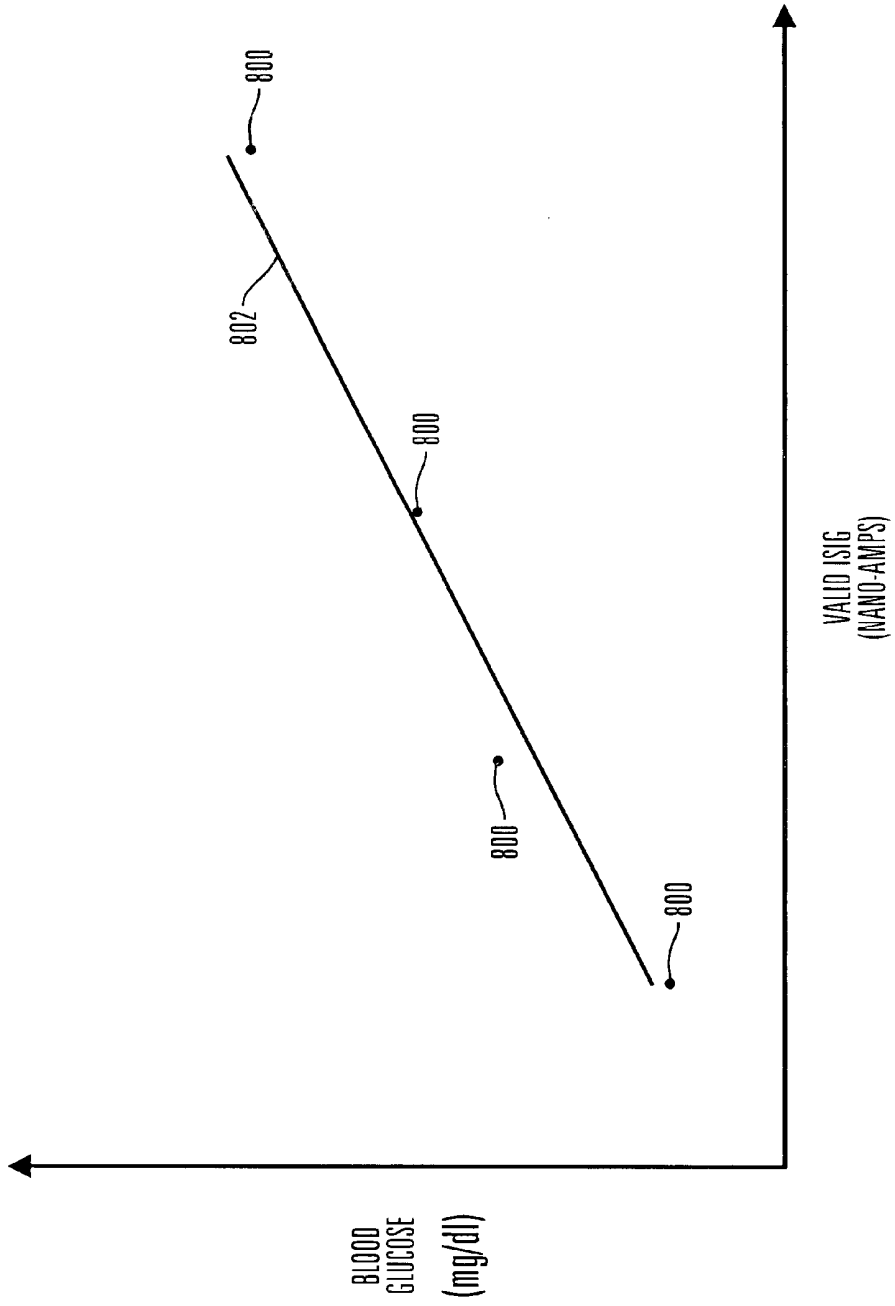

FIG. 14

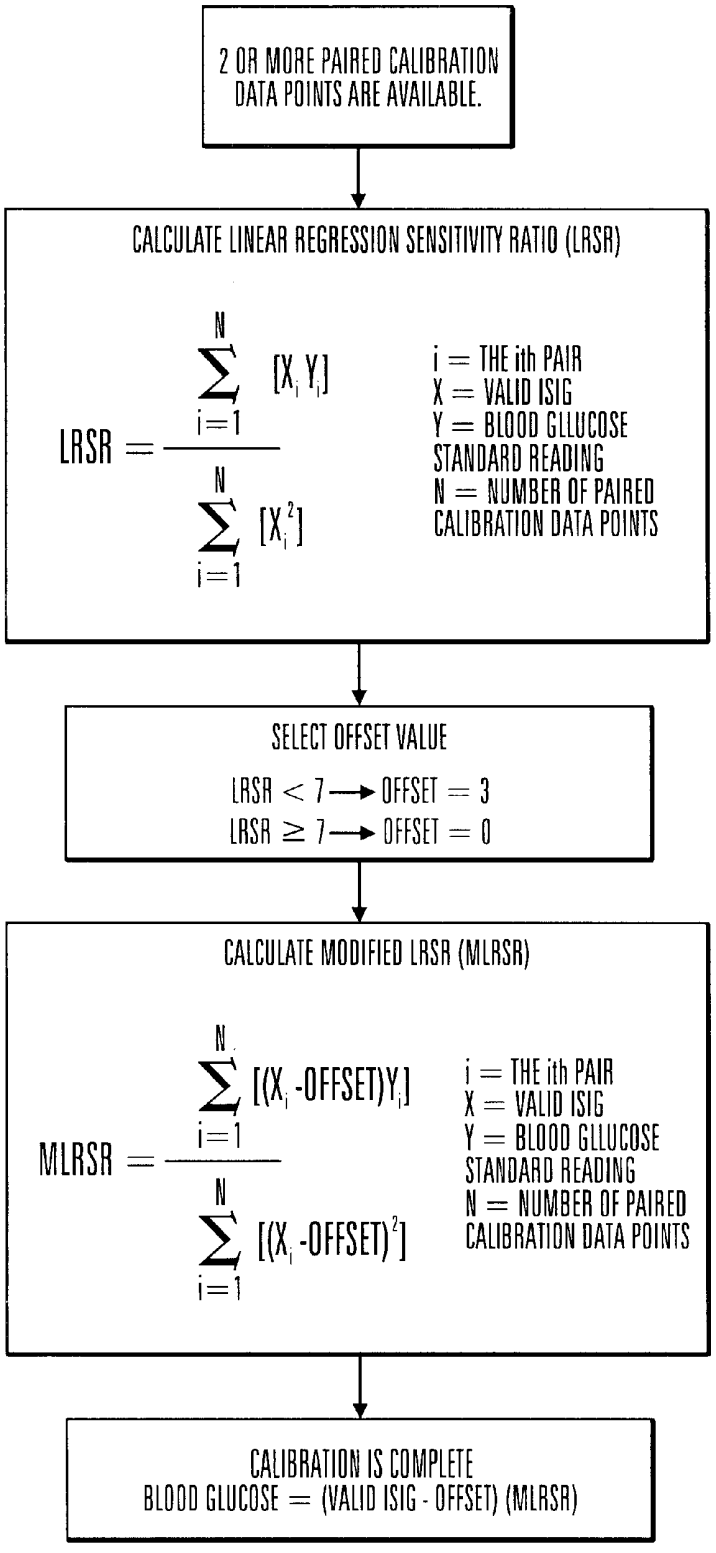
2 OR MORE PAIRED CALIBRATION DATA POINTS ARE AVAILABLE.
CALCULATE LINEAR REGRESSION SENSITIVITY RATIO (LRSR)
$LRSR = \frac{\sum_{i=1}^{N} [X_i Y_i]}{\sum_{i=1}^{N} [X_i^2]}$
i = THE ith PAIR
X = VALID ISIG
Y = BLOOD GLLUCOSE STANDARD READING
N = NUMBER OF PAIRED CALIBRATION DATA POINTS
SELECT OFFSET VALUE
LRSR < 7 → OFFSET = 3
LRSR ≥ 7 → OFFSET = 0
CALCULATE MODIFIED LRSR (MLRSR)
$MLRSR = \frac{\sum_{i=1}^{N} [(X_i - OFFSET)Y_i]}{\sum_{i=1}^{N} [(X_i - OFFSET)^2]}$
i = THE ith PAIR
X = VALID ISIG
Y = BLOOD GLLUCOSE STANDARD READING
N = NUMBER OF PAIRED CALIBRATION DATA POINTS
CALIBRATION IS COMPLETE
BLOOD GLUCOSE = (VALID ISIG - OFFSET) (MLRSR)

FIG. 15

GLUCOSE MONITOR CALIBRATION METHODS

RELATED APPLICATIONS

This application claims priority on U.S. Provisional Application Serial No. 60/121,584, filed Feb. 25, 1999 and entitled "Glucose Monitor Calibration Techniques Using Linear Regression", which is herein incorporated by reference in its entirety.

FIELD OF THE INVENTION

This invention relates to glucose monitor systems and, in particular embodiments, to calibration methods for glucose monitoring systems.

BACKGROUND OF THE INVENTION

Over the years, body characteristics have been determined by obtaining a sample of bodily fluid. For example, diabetics often test for blood glucose levels. Traditional blood glucose determinations have utilized a painful finger prick using a lancet to withdraw a small blood sample. This results in discomfort from the lancet as it contacts nerves in the subcutaneous tissue. The pain of lancing and the cumulative discomfort from multiple needle pricks is a strong reason why patients fail to comply with a medical testing regimen used to determine a change in a body characteristic over a period of time. Although non-invasive systems have been proposed, or are in development, none to date have been commercialized that are effective and provide accurate results. In addition, all of these systems are designed to provide data at discrete points and do not provide continuous data to show the variations in the characteristic between testing times.

A variety of implantable electrochemical sensors have been developed for detecting and/or quantifying specific agents or compositions in a patient's blood. For instance, glucose sensors are being developed for use in obtaining an indication of blood glucose levels in a diabetic patient. Such readings are useful in monitoring and/or adjusting a treatment regimen which typically includes the regular administration of insulin to the patient. Thus, blood glucose readings improve medical therapies with semi-automated medication infusion pumps of the external type, as generally described in U.S. Pat. Nos. 4,562,751; 4,678,408; and 4,685,903; or automated implantable medication infusion pumps, as generally described in U.S. Pat. No. 4,573,994, which are herein incorporated by reference. Typical thin film sensors are described in commonly assigned U.S. Pat. Nos. 5,390,671; 5,391,250; 5,482,473; and 5,586,553 which are incorporated by reference herein. See also U.S. Pat. No. 5,299,571.

SUMMARY OF THE DISCLOSURE

It is an object of an embodiment of the present invention to provide an improved glucose monitor system and method, which obviates for practical purposes, the above mentioned limitations.

According to an embodiment of the invention, a method of calibrating glucose monitor data includes obtaining glucose monitor data at predetermined intervals over a period of time. It also includes obtaining at least two reference glucose values from a reference source that correspond with the glucose monitor data obtained at the predetermined intervals. Additionally, calculating calibration characteristics using the at least two reference values and the corresponding glucose monitor data to regress the obtained glucose monitor data is included. And calibrating the obtained glucose monitor data using the calibration characteristics is included. In preferred embodiments, the reference source is a blood glucose meter, and the at least two reference glucose values are obtained from blood tests. In additional embodiments, the calculation of the calibration characteristics is obtained using linear regression, and in particular embodiments, using least squares linear regression. Alternatively, the calculation of the calibration characteristics is obtained using non-linear regression or a non-regression technique.

In particular embodiments, the predetermined period of time is a 24 hour period, and the predetermined intervals are 5 minute intervals. Further embodiments may include the step of shifting the data by a predetermined time factor, such as for example, ten minutes. Preferably, the calibration is performed while obtaining glucose monitor data. However, alternative embodiments may perform the calibration on glucose monitor data that has been collected for post processing by another processing device.

According to an embodiment of the invention, a method of calibrating glucose monitor data includes obtaining glucose monitor data at a predetermined memory storage rate. Also included is obtaining at least one blood glucose reference reading from a blood glucose measuring device that corresponds with at least one glucose monitor data point obtained at the predetermined memory storage rate. Calculating a calibration factor using the at least one blood glucose reference reading and the corresponding at least one glucose monitor data point is included. And calibrating the obtained glucose monitor data using the calibration factor is included. In preferred embodiments, after a first calibration factor is calculated, at least one previous calibration factor is used with at least one blood glucose reference reading from a blood glucose measuring device and its at least one corresponding glucose monitor data point to calculate a calibration factor. In additional embodiments, at least two blood glucose reference readings are used for calibration. In further embodiments, the calculation of the calibration factor is obtained using linear regression, and in particular least squares linear regression. Alternatively, calculation of the calibration factor uses non-linear regression or a non-regression technique.

In particular embodiments, the calibration factor is applied to glucose monitor data obtained before a last blood glucose reference reading from a blood glucose measuring device that corresponds with at least one glucose monitor data point obtained at a predetermined memory storage rate is used to calculate the calibration factor. Alternatively, the calibration factor is applied to glucose monitor data obtained after the last blood glucose reference reading from a blood glucose measuring device that is used to calculate the calibration factor.

In particular embodiments, the predetermined memory storage rate is once every 5 minutes. And the glucose monitor data that is obtained at a predetermined memory storage rate is the result of utilizing at least 2 sample values sampled from a glucose sensor at a rate faster than the memory storage rate.

In preferred embodiments, at least one blood glucose reference reading from a blood glucose measuring device is obtained during a predetermined calibration period, and a calibration factor is calculated using those readings after every predetermined calibration period. In particular embodiments, the predetermined calibration period is 24 hours. In further preferred embodiments, a predetermined

time shift is used to temporally correlate the at least one blood glucose reference reading from a blood glucose measuring device with the at least one glucose monitor data point obtained at the predetermined memory storage rate. In particular embodiments, the predetermined time shift is ten minutes.

In particular embodiments, one or more calculations for calculating a first calibration factor is different from the one or more calculations for calculating subsequent calibration factors. In other particular embodiments, the calculation for calculating a first calibration factor uses a single-point calibration equation. In further particular embodiments, the single-point calibration equation includes an offset value. In other particular embodiments, the one or more calculations for calculating a calibration factor other than the first calibration factor uses a linear regression calibration equation, a non-linear regression calibration equation, or a non-regression technique.

According to an embodiment of the invention, a method of calibrating glucose monitor data includes obtaining glucose monitor data. It also includes obtaining from another blood glucose measuring device at least one blood glucose reference reading that is temporally associated with at least one glucose monitor data reading. Determining a calibration equation using the at least one blood glucose reference reading and the corresponding at least one glucose monitor data reading is also included. And calibrating the glucose monitor data using the calibration equation is included.

According to another embodiment of the invention, a method of calibrating body characteristic monitor data includes obtaining body characteristic monitor data. It also includes obtaining from another characteristic measuring device at least one characteristic reference reading that is temporally associated with at least one characteristic monitor data point.

Calculating calibration characteristics using the at least one characteristic reference reading and the corresponding at least one characteristic monitor data point is included. And calibrating the obtained characteristic monitor data using the calibration characteristics is included. In particular embodiments, at least two body characteristic reference readings are used for calculating the calibration characteristics. In particular embodiments, the calculation for calculating the calibration characteristics is a linear regression calculation.

According to additional embodiments of the invention, an apparatus for calibrating glucose monitor data includes a glucose monitor, glucose sensor, a blood glucose meter and a processor. The glucose monitor includes a glucose monitor memory for storing glucose monitor data. The glucose sensor is electronically coupled to the glucose monitor to supply the glucose monitor data. The blood glucose measuring device provides at least one blood glucose reference reading that is temporally associated with at least one glucose monitor data point. And the processor includes software to calculate calibration characteristics using the at least one blood glucose reference reading that is temporally associated with at least one glucose monitor data point, and the processor applies the calibration characteristics to the glucose monitor data. In particular embodiments, the at least one blood glucose reading is entered into the glucose monitor. In particular embodiments, the glucose monitor includes the processor, or alternatively, the processor is in a separate device that receives glucose monitor data from the glucose monitor.

In other embodiments of the invention, an apparatus for calibrating glucose monitor data includes means for obtaining glucose monitor data. It also includes means for obtaining from another blood glucose measuring device at least one blood glucose reference reading that is temporally associated with at least one glucose monitor data reading. Means for calculating a calibration equation using the at least one blood glucose reference reading and the corresponding at least one glucose monitor data reading is included. And means for calibrating the glucose monitor data using the calibration equation is also included.

Other features and advantages of the invention will become apparent from the following detailed description, taken in conjunction with the accompanying drawings which illustrate, by way of example, various features of embodiments of the invention.

BRIEF DESCRIPTION OF THE DRAWINGS

A detailed description of embodiments of the invention will be made with reference to the accompanying drawings, wherein like numerals designate corresponding parts in the several figures.

FIG. **1** is a is a perspective view illustrating a subcutaneous glucose sensor insertion set and glucose monitor device in accordance with an embodiment of the present invention;

FIG. **2** is a cross-sectional view of the sensor set and glucose monitor device as shown along the line **2**—**2** of FIG. **1**;

FIG. **3** is a cross-sectional view of a slotted insertion needle used in the insertion set of FIGS. **1** and **2**;

FIG. **4** is a cross-sectional view as shown along line **4**—**4** of FIG. **3**;

FIG. **5** is a cross-sectional view as shown along line **5**—**5** of FIG. **3**;

FIG. **6** is a partial cross-sectional view corresponding generally with the encircled region **6** of FIG. **2**;

FIG. **7** is a cross-sectional view as shown along line **7**—**7** of FIG. **2**.

FIGS. **8**(*a*–*c*) are diagrams showing a relationship between sampled values, interval values and memory storage values.

FIG. **9** is a chart showing clipping limits.

FIG. **10** is a sample computer screen image of a post processor analysis of glucose monitor data.

FIG. **11** is a chart illustrating the pairing of a blood glucose reference reading with glucose monitor data.

FIG. **12** is a chart illustrating an example of a single-point calibration.

FIG. **13** is a block diagram of a single-point calibration technique.

FIG. **14** is a chart illustrating an example of a linear regression calibration.

FIG. **15** is a block diagram of a linear regression calibration technique.

DETAILED DESCRIPTION OF THE PREFERRED EMBODIMENTS

As shown in the drawings for purposes of illustration, the invention is embodied in calibration methods for a glucose monitor that is coupled to a sensor set to provide continuous data recording of readings of glucose levels from a sensor for a period of time. In preferred embodiments of the present invention, the sensor and monitor are a glucose sensor and a glucose monitor for determining glucose levels in the

blood and/or bodily fluids of a user. However, it will be recognized that further embodiments of the invention may be used to determine the levels of other body characteristics including analytes or agents, compounds or compositions, such as hormones, cholesterol, medications concentrations, viral loads (e.g., HIV), bacterial levels, or the like. The glucose sensor is primarily adapted for use in subcutaneous human tissue. However, in still further embodiments, one or more sensors may be placed in other tissue types, such as muscle, lymph, organ tissue, veins, arteries or the like, and used in animal tissue to measure body characteristics . Embodiments may record readings from the sensor on an intermittent, periodic, on-demand, continuous, or analog basis. FIGS. **1–7** illustrate a glucose monitor system **1** for use with the calibration methods. The glucose monitor system **1**, in accordance with a preferred embodiments of the present invention, includes a subcutaneous glucose sensor set **10** and a glucose monitor **100**. In preferred embodiments, the glucose monitor **100** is of the type described in U.S. patent. application Ser. No. 60/121,664, filed on Feb. 25, 1999, entitled "Glucose Monitor System", which is herein incorporated by reference. In alternative embodiments, the glucose monitor is of the type described in U.S. patent application Ser. No. 09/377,472, filed Aug. 19, 1999, entitled "Telemetered Characteristic Monitor System And Method Of Using The Same", which is incorporated by reference herein.

Preferably, the glucose monitor **100** is worn by the user and is connected to a surface mounted glucose sensor set **10** that is attached to a user's body by an electrically conductive cable **102**, of the type described in U.S. patent application Ser. No. 60/121,656, filed on Feb. 25, 1999, entitled "Test Plug and Cable for a Glucose Monitor", which is incorporated by reference herein. In preferred embodiments, the sensor interface may be configured in the form of a jack to accept different types of cables that provide adaptability of the glucose monitor **100** to work with different types of subcutaneous glucose sensors and/or glucose sensors placed in different locations of the user's body. However, in alternative embodiments, the sensor interface is permanently connected to the cable **102**. In additional alternative embodiments, a characteristic monitor is connected to one or more sensor sets to record data of one or more body characteristics from one or more locations on or in the user's body.

The glucose sensor set **10** is of the type described in U.S. patent application Ser. No. 60/121,655, filed on Feb. 25, 1999, entitled "Glucose Sensor Set", or U.S. Pat. Ser. No. 08/871,831, filed on Jun. 9, 1997, entitled "Insertion Set For A Transcutaneous Sensor", which are incorporated by reference herein. The glucose sensor **12**, of the type described in U.S. patent application Ser. No. 29/101,218, filed on Feb. 25, 1999, entitled "Glucose Sensor", or described in commonly assigned U.S. Pat. Nos. 5,390,671; 5,391,250; 5,482,473; and 5,586,553 which are incorporated by reference herein; extends from the glucose sensor set **10** into the user's body with electrodes **20** of the glucose sensor **12** terminating in the user's subcutaneous tissue. See also U.S. Pat. No. 5,299,571. However, in alternative embodiments, the glucose sensor **12** may use other types of sensors, such as chemical based, optical based, or the like. In further alternative embodiments, the sensors may be of a type that is used on the external surface of the skin or placed below the skin layer of the user for detecting body characteristics.

The glucose monitor **100** generally includes the capability to record and store data as it is received from the glucose sensor **12**, and includes either a data port (not shown) or wireless transmitter and/or receiver (also not shown) for transferring data to and/or from a data processor **200** such as a computer, communication station, a dedicated processor designed specifically to work with the glucose monitor, or the like. The glucose monitor is generally of the type described in U.S. patent application Ser. No. 09/377,472, filed Aug. 19, 1999, entitled "Telemetered Characteristic Monitor System And Method of Using The Same", which is incorporated by reference herein.

Preferably, the glucose monitor system **1** minimizes inconvenience by separating complicated monitoring process electronics into two separate devices; the glucose monitor **100**, which attaches to the glucose sensor set **10**; and the data processor **200**, which contains the software and programming instructions to download and evaluate data recorded by the glucose monitor **100**. In addition, the use of multiple components (e.g., glucose monitor **100** and data processor **200**) facilitates upgrades or replacements, since one module, or the other, can be modified, re-programmed, or replaced without requiring complete replacement of the monitor system **1**. Further, the use of multiple components can improve the economics of manufacturing, since some components may require replacement on a more frequent basis, sizing requirements may be different for each module, different assembly environment requirements, and modifications can be made without affecting the other components.

The glucose monitor **100** takes raw glucose sensor data from the glucose sensor **12** and assesses it during real-time and/or stores it for later processing or downloading to the data processor **200**, which in turn analyzes, displays, and logs the received data. The data processor **200** utilizes the recorded data from the glucose monitor **100** to analyze and review the blood glucose history. In particular embodiments, the glucose monitor **100** is placed into a com-station which facilitates downloading data to a personal computer for presentation to a physician. A software is used to download the data, create a data file, calibrate the data, and display the data in various formats including charts, forms, reports, graphs, tables, lists, and the like. In further embodiments, the glucose monitor system **1** may be used in a hospital environment or the like.

In alternative embodiments, the glucose monitor includes at least portions of the software described as contained within the data processor **200** above. The glucose monitor might contain the necessary software to calibrate glucose sensor signals, display a real-time blood glucose value, show blood glucose trends, activate alarms and the like. A glucose monitor with these added capabilities is useful for patients that might benefit from real-time observations of their blood glucose characteristics even while they're not in close proximity to a computer, communication device or dedicated independent data processor.

As shown in FIG. **2**, the data processor **200**, may include a display **214** that is used to display the calculated results of the raw glucose sensor data received via a download from the glucose monitor **100**. The results and information displayed includes, but is not limited to, trending information of the characteristic (e.g., rate of change of glucose), graphs of historical data, average characteristic levels (e.g., glucose), stabilization and calibration information, raw data, tables (showing raw data correlated with the date, time, sample number, corresponding blood glucose level, alarm messages, and more), and the like. Alternative embodiments include the ability to scroll through the data. The display **214** may also be used with buttons (not shown) on the data processor **200**, computer, communication station, characteristic monitor, or the like, to program or update data. In

preferred embodiments, the glucose monitor **100** includes a display **132** to assist the user in programming the glucose monitor **100**, entering data, stabilizing, calibrating, downloading data, or the like.

Still further embodiments of the present invention may include one or more buttons **122**, **124**, **126** and **128** on the glucose monitor **100** to program the monitor **100**, to record data, insert flags to correlate data with external events for later analysis, input calibration values, or the like. In addition, the glucose monitor **100** may include an on/off button **130** for compliance with safety standards and regulations to temporarily suspend transmissions or recording. The glucose monitor **100** may also be combined with other medical devices to accept other patient data through a common data network and/or telemetry system. The glucose monitor **100** may be combined with a blood glucose meter to directly import or correlate glucose calibration reference values such as described in U.S. patent application Ser. No. 09/334,996, filed Jun. 17, 1999, entitled "Characteristic Monitor With A Characteristic Meter and Method Of Using The Same", which is incorporated by reference herein. The glucose monitor **100** may also be combined with semi-automated medication infusion pumps of the external type, as generally described in U.S. Pat. Nos. 4,562,751; 4,678,408; and 4,685,903; or automated implantable medication infusion pumps, as generally described in U.S. Pat. No. 4,573,994, which are herein incorporated by reference. The glucose monitor **100** may record data from the infusion pumps and/or may process data from both the glucose sensor **12** and an infusion pump to establish a closed loop system to control the infusion pump based on glucose sensor measurements. In other embodiments, other body characteristics are monitored, and the monitor may be used to provide feedback in a closed loop system to control a drug delivery rate. In further alternative embodiments, the glucose monitor **100** can be combined with a glucose sensor set **10** as a single unit.

Glucose sensors are replaced periodically to avoid infection, decaying enzyme coating and therefore sensor sensitivity, deoxidization of the electrodes, and the like. The user will disconnect the glucose sensor set **10** from the cable **102** and glucose monitor **100**. A needle **14** is used to install another glucose sensor set **10** and then the needle **14** is removed. Further description of the needle **14** and the sensor set **10** are found in U.S. Pat. No. 5,586,553, entitled "Transcutaneous Sensor Insertion Set"; co-pending U.S. patent application Ser. No. 09/346,835, filed Jul. 2, 1999, entitled "Insertion Set For A Transcutaneous Sensor"; and U.S. Pat. No. 5,951,521, entitled "A Subcutaneous Implantable Sensor Set Having The Capability To Remove Or Deliver Fluids To An Insertion Site," which are herein incorporated by reference.

The user connects the connection portion **24** of the glucose sensor set **10** through the cable **102** to the glucose monitor **100**, so that the glucose sensor **12** can then be used over a prolonged period of time. An initial reading may be downloaded from the glucose sensor set **10** and the glucose monitor **100** to the data processor **200**, to verify proper operation of the glucose sensor **10** and the glucose monitor **100**. In preferred embodiments, the glucose sensor set **10** provides data to the glucose monitor **100** for one to seven days before replacement. Glucose sensors **12** may last in the user's body for longer or shorter periods of time depending on the quality of the installation, cleanliness, the durability of the enzyme coating, deoxidization of the sensor, user's comfort, and the like.

After installation into the body, the glucose sensor **12** is initialized to achieve a steady state of operation before starting a calibration process. Preferably, power supplied by three series silver oxide **357** battery cells **110** in the glucose monitor **100** is used to speed the initialization of the glucose sensor **12**. Alternatively, other power supplies may be used such as, different battery chemistries including lithium, alkaline, or the like, and different numbers of batteries, solar cells, a DC converter plugged into an AC socket (provided with proper electrical isolation), or the like.

The use of an initialization process can reduce the time for glucose sensor **12** stabilization from several hours to an hour or less. The preferred initialization procedure uses a two step process. First, a high voltage (preferably between 1.0–1.1 volts—although other voltages may be used) is applied between electrodes **20** of the sensor **12** for one to two minutes (although different time periods may be used) to allow the sensor **12** to stabilize. Then, a lower voltage (preferably between 0.5–0.6 volts—although other voltages may be used) is applied for the remainder of the initialization process (typically 58 minutes or less). Other stabilization/initialization procedures using differing currents, currents and voltages, different numbers of steps, or the like, may be used. Other embodiments may omit the initialization/stabilization process, if not required by the body characteristic sensor or if timing is not a factor. Alternatively, the characteristic monitor or the data processor **200** may apply an algorithm to the sensor data to determine when initial transients are sufficiently diminished and the sensor is at a significantly stable state to begin calibration.

In preferred embodiments, data is not considered valid until a sensor initialization event flag (ESI) is set in the data indicating that stabilization is complete. Preferably, stabilization is complete after 60 minutes or when a user enters a sensor initialization flag using one or more buttons on the glucose monitor **100**. After stabilization/initialization is complete the glucose monitor **100** is calibrated to accurately interpret readings from the newly installed glucose sensor **12**.

Beginning with the stabilization process, the glucose monitor **100** measures a continuous electrical current signal (ISIG) generated by the glucose sensor **12** relative to a concentration of glucose present in the subcutaneous tissue of the user's body. In preferred embodiments, the glucose monitor **100** samples the ISIG from the glucose sensor **12** at a sampling rate of once every 10 seconds, as shown in FIGS. **8***a–c*. Examples of sampled values are labeled A–AD in FIG. **8***a*. At an interval rate of once per minute, the highest and lowest of the sampled values (shown in FIG. **8***a* as circled sampled values A, E, G, I, M, R, V, W, Y, and AB) are ignored, and the remaining 4 sampled values from an interval are averaged to create interval values (shown in FIG. **8***b* as values F', L', R', X', and AD'). At a glucose monitor memory storage rate of once every 5 minutes, the highest and lowest of the interval values (shown in FIG. **8***b* as values L' and X') are ignored and the remaining 3 interval values are averaged and stored in a glucose monitor memory as memory values (shown in FIG. **8***c* as point AD"). The memory values are retained in memory and may be downloaded to the data processor **200**. The memory values are used to calibrate the glucose monitor **100** and/or the post processor **200** and to analyze blood glucose levels. The sampling rate, interval rate and the memory storage rate may be varied as necessary to capture data with sufficient resolution to observe transients or other changes in the data depending on the rate at which sensor values can change, which is affected by the sensor sensitivity, the body characteristic being measured, the physical status of the user, and the like. In other embodiments, all of the sampled values are

included in the average calculations of memory storage values. In alternative embodiments, more or less sampled values or interval values are ignored depending on the signal noise, sensor stability, or other causes of undesired transient readings. Finally, in still other embodiments, all sampled values and/or interval values are stored in memory.

Clipping limits may be used to limit the signal magnitude variation from one value to the next thereby reducing the effects of extraneous data, outlying data points, or transients. In preferred embodiments, clipping limits are applied to the interval values. For instance, interval values that are above a maximum clipping limit or below a minimum clipping limit are replaced with the nearest clipping limit value.

In alternative embodiments, interval values that are outside of the clipping limits are ignored and not used to calculate the next memory storage value. In particular embodiments, the detection of interval values outside of the clipping limits is considered a calibration cancellation event. In further particular embodiments, more than one value must be deemed outside of clipping limits to constitute a calibration cancellation event. (Calibration cancellation events are discussed below).

In preferred embodiments, the clipping limits are shifted after each data point. The level that the clipping limits are set to is dependent on an acceptable amount of change from the previous interval value to the present interval value, which is affected by the sensor sensitivity, signal noise, signal drift, and the like. In preferred embodiments, the clipping limits are calculated based on the magnitude of the previous interval value. For example, for a previous interval value from 0 up to but not including 15 Nano-Amps, the clipping limits are set at plus and minus 0.5 Nano-Amps about the previous interval value. For a previous interval value from up to but not including 25 Nano-Amps, the clipping limits are set at plus and minus 3% of the previous interval value, about the previous interval value. For a previous interval value from 25 up to but not including 50 Nano-Amps, the clipping limits are set at plus and minus 2% of the previous interval value, about the previous interval value. And for a previous interval value of 50 Nano-Amps and greater, the clipping limits are set at plus and minus 1% about the previous interval value. In alternative embodiments, different clipping limits may be used.

FIG. **9** shows a typical clipping limit example in which a previous interval value **500**, associated with interval N−1, has a magnitude of 13.0 Nano-Amps, which is less than 15.0 Nano-Amps. Therefore, the maximum clipping limit **502** for the present interval value **506** is set at 13.5 Nano-Amps, which is 0.5 Nano-Amps greater than the magnitude of the previous interval value **500**. And the minimum clipping limit **504** is set at 12.5 Nano-Amps which is 0.5 Nano-Amps below the previous interval value **500**. The present interval value **506**, associated with interval N, is between the maximum clipping limit **502** and the minimum clipping limit **504** and is therefore acceptable.

In another example shown in FIG. **9**, the present interval value **508**, associated with interval M, has a value of 25.0 Nano-Amps which is outside of the clipping limit **514** and will therefore be clipped. The previous interval value **510** associated with interval M−1, is 26.0 Nano-Amps, which is included in the range from 25.0 up to but not including 50.0 Nano-Amps as discussed above. Therefore the clipping limits are ±2%. The maximum clipping limit **512** is 2% greater than the previous interval value **510**,

$$26.0+26.0*0.02=26.5 \text{ Nano-Amps.}$$

Similarly the minimum clipping limit **514** is 2% less than the previous interval value **510**,

$$26.0-26.0*0.02=25.5 \text{ Nano-Amps.}$$

Since the present interval value **508** of 25.0 Nano-Amps is less than the minimum clipping limit **514** of 25.5 Nano-Amps, it will be clipped, and 25.5 Nano-Amps will be used in place of 25.0 Nano-Amps to calculate a memory storage value. For further illustration, FIG. **8** shows interval value R', which is calculated by averaging sampled values N through Q, is outside of the clipping limits **412** and **414**, which result from the previous interval value L'. Therefore, the magnitude of interval value R' is not used to calculate memory value AD", instead R", which is the magnitude of the minimum clipping limit **414**, is used.

In other embodiments, the clipping limits may be a smaller or larger number of Nano-Amps or a smaller or larger percentage of the previous interval value based on the sensor characteristics mentioned above. Alternatively, the clipping limits are calculated as plus or minus the same percent change from every previous interval value. Other algorithms use several interval values to extrapolate the next interval value and set the clipping limits to a percentage higher and lower than the next anticipated interval value. In further alternatives, clipping may be applied to the sampled values, interval values, memory values, calculated glucose values, estimated values of a measured characteristic, or any combination of the values.

In preferred embodiments, all interval values are compared to an out-of-range limit of 200 Nano-Amps. If three consecutive interval values are equal to or exceed the out-of-range limit, the sensor sensitivity is deemed to be too high and an alarm is activated to notify the user that re-calibration is required or the sensor may need replacing. In alternative embodiments, the out-of-range limit is set at higher or lower values depending on the range of sensor sensitivities, the expected working life of the sensor, the range of acceptable measurements, and the like. In particular embodiments, the out-of range limit is applied to the sampled values. In other embodiments, the out-of-range limit is applied to the memory storage values.

In preferred embodiments, unstable signal alarm limits are set to detect when memory storage values change too much from one to another. The signal alarm limits are established similarly to the clipping limits described above for the interval values, but allow for a larger change in value since there is more time between memory storage values than between interval values. Re-calibration or replacement of the glucose sensor **12** is required once an unstable signal alarm is activated. In essence, the glucose monitor **100** has detected too much noise in the ISIG from the glucose sensor **12**.

Each memory storage value is considered valid (Valid ISIG value) unless one of the following calibration cancellation events occurs: an unstable signal alarm (as discussed above), a sensor initialization event (as discussed above), a sensor disconnect alarm, a power on/off event, an out-of-range alarm (as discussed above), or a calibration error alarm. Only Valid ISIG values are used to calculate blood glucose levels by the glucose monitor **100** or post processor **200**, as shown in FIG. **10**. Once a calibration cancellation event occurs, the successive memory storage values are not valid, and therefore are not used to calculate blood glucose, until the glucose monitor **100** or post processor **200** is re-calibrated. FIG. **10** shows an explanatory computer screen in which cell P3 indicates a sensor disconnect alarm with the abbreviation "SeDi". As shown, blood glucose values do not appear in column K, titled "Sensor Value", and Valid ISIG values do not appear in column J until after the sensor is initialized, as indicated by the "ESI" flag in cell

N17. One exception however, is the power on/off event. If the glucose monitor **100** is turned off for a short enough period of time, generally up to 30 minutes, the memory storage values are considered Valid ISIG values as soon as the power is turned back on. If the power is off for longer than 30 minutes, the glucose monitor must be re-calibrated before ISIG values are considered valid. Alternatively, the power may be off 30 minutes up to indefinitely and once the power is restored, the memory storage values are Valid ISIG values. The sensor disconnect alarm is activated when the glucose monitor **100** does not detect a signal. In preferred embodiments, when 2 or more out of 5 interval values collected within a given memory storage rate are less than 1.0 Nano-Amp, the disconnect alarm is triggered. In alternative embodiments, more or less values need be below a particular amperage to trigger the disconnect alarm depending of the acceptable range or sensor readings and the stability of the sensor signal. The remaining two calibration cancellation events, the calibration error and an alternative embodiment for the out-of-range alarm, are discussed in conjunction with the calibration process below.

Preferred embodiments are directed to calibration techniques that are used by either glucose monitors **100** during real-time measurements of one or more signals from the glucose sensor **12**, or post processors **200** during post-processing of data that has been previously recorded and downloaded (as shown in FIG. **10**).

To calibrate the glucose monitor **100**, the calibration factor called a sensitivity ratio (SR) (blood glucose level/Valid ISIG value) is calculated for a particular glucose sensor **12**. The SR is a calibration factor used to convert the Valid ISIG value (Nano-Amps) into a blood glucose level (mg/dl or mmol/l). In alternative embodiments, the units for the SR may vary depending on the type of signal available from the sensor (frequency, amplitude, phase shift, delta, current, voltage, impedance, capacitance, flux, and the like), the magnitude of the signals, the units to express the characteristic being monitored, or the like.

In preferred embodiments, the user obtains a blood glucose reference reading from a common glucose meter, or another blood glucose measuring device, and immediately enters the is blood glucose reference reading into the glucose monitor **100**. The blood glucose reference reading is assumed to be accurate and is used as a reference for calibration. The glucose monitor **100**, or a post processor **200**, must temporally correlate the blood glucose reference reading with a Valid ISIG value to establish a paired calibration data point. Since the glucose level in the interstitial body fluid tends to lag behind the blood glucose level, the glucose monitor **100** or post processor **200** applies a delay time and then pairs the blood glucose reference reading with a Valid ISIG value as shown in FIG. **11**. In preferred embodiments, an empirically derived 10 minute delay is used. Since Valid ISIG values are averaged and stored every 5 minutes, the glucose monitor **100** correlates the blood glucose reference reading with the third Valid ISIG stored in memory after the blood glucose reference reading is entered (resulting in an effective delay of to 15 minutes). FIG. **11** illustrates an example, in which a blood glucose reference reading 600 of 90 mg/dl is entered into the glucose monitor **100** at 127 minutes. The next Valid ISIG value **602** is stored at 130 minutes. Given a 10 minute delay, the glucose reference reading **600** is paired with the Valid ISIG value **604** which is stored at 140 minutes with a value of 30 Nano-amps. Note that two numbers are needed to establish one paired calibration data point, a blood glucose reference reading and a Valid ISIG.

Other delay times may be used depending on the user's metabolism, the response time of the sensor, the delay time required for the glucose meter to calculate a reading and for the reading to be entered into the glucose monitor **100**, the type of analyte being measured, the tissue that the sensor is placed into, environmental factors, whether the previous glucose Valid ISIG value (or the trend of the Valid ISIG values) was higher or lower than current Valid ISIG value, or the like. Once paired calibration data is available, the appropriate calibration process may be applied dependent on how many paired calibration data points are available since the last calibration, the total period of time that the glucose sensor **12** has been in use, and the number of times the glucose sensor **12** has been calibrated.

In preferred embodiments, blood glucose reference readings are entered into the glucose monitor **100** periodically through out each day of use. Preferably calibration is conducted immediately after the initialization/stabilization of a glucose sensor **12** and once a day thereafter. However, calibration may be conducted more or less often depending on whether a glucose sensor **12** has been replaced, whether a calibration cancellation event has occurred, the stability of the glucose sensor **12** sensitivity over time, or the like.

In preferred embodiments, blood glucose reference readings are collected several times per day but a new calibration factor is calculated only once per day. Therefore, typically more than one paired calibration data point is collected between calibrations. In alternative embodiments, the glucose monitor is calibrated every time a new paired calibration data point is collected.

Preferred embodiments use a single-point calibration technique (shown in a block diagram of FIG. **13**) to calculate the SR when only one paired calibration data point is available, such as immediately after initialization/stabilization. And a modified linear regression technique (shown in a block diagram in FIG. **15**) is used when two or more paired calibration data points are available. Particular embodiments use a single-point calibration technique whether or not more than one paired calibration data point is available.

A single-point calibration equation is based on the assumption that the Valid ISIG will be 0 when the blood glucose is 0. As shown in FIG. **12**, a single paired calibration point **700** is used with the point (0,0) to establish a line **702**. The slope of the line from the origin (0,0) and passing through the single paired calibration point **700** is the single-point sensitivity ratio (SPSR). The single-point calibration equation to calculate the calibration factor SPSR is as follows:

$$\text{SPSR} = \frac{\text{Blood Glucose Reference Reading}}{\text{Valid ISIG}}$$

Where SPSR a Single-Point Sensitivity Ratio.
Therefore, the calibrated blood glucose level is,

Blood Glucose Level=Valid ISIG*SPSR.

As an example, using the values of 20.1 Nano-Amps and 102 mg/dl from the paired calibration data point shown in FIG. **12**, the calculation of SPSR is:

SPSR=102/20.1=5.07 mg/dl per Nano-amp.

To continue the example, once the calibration is complete, given a glucose sensor reading of 15.0 Nano-Amps, the calculated blood glucose level is:

Blood Glucose Level=15.0*5.07=76.1 mg/dl.

Additionally, particular embodiments use an offset value in a calibration equation to compensate for the observation that more sensitive glucose sensors **12** (i.e. glucose sensors **12** that generate higher ISIG values compared to other glucose sensors **12** at the same blood glucose level, which result in lower SR values) often have a less linear performance at very high blood glucose levels when compared to glucose sensors **12** with lower sensitivity (and therefore relatively higher SR values). If the SPSR for a particular glucose sensor **12**, as calculated above, is less than a sensitivity threshold value, then a modified SPSR (MSPSR) is calculated using an offset value included in a modified single-point calibration equation. In preferred embodiments, the threshold value is 7. When the initial calculation of the SPSR (shown above) is less than 7, an offset value of 3 is used to calculate the MSPSR. If the initial calculation of SPSR yields a value of 7 or greater, then the offset value is 0. Thus, the calibration factor (MSPSR) is calculated using the offset value in the modified single-point calibration equation, as follows:

$$\text{MSPSR} = \frac{\text{Blood Glucose Reference Reading}}{(\text{Valid ISIG} - \text{offset})}$$

Therefore, the calibrated blood glucose level is,

Blood Glucose Level=(Valid *ISIG*-offset)**MSPSR*.

Continuing the above example since the SPSR is 5.07, which is less than 7, the sensitivity ratio is recalculated using the MSPSR equation as:

MSPSR=102/(20.1–3)=5.96 mg/dl per Nano-amp.

And given a glucose sensor reading of 15.0 Nano-Amps after calibration the calculated blood glucose level is:

Blood Glucose Level=(15.0–3)*5.96=71.5 mg/dl.

In another example, given a blood glucose reference reading of 95 from a typical blood glucose meter and a Valid ISIG value of 22.1, the resulting SPSR is 95/22.1=4.3. Since SR<7, the offset =3. Therefore, the MSPSR is 95/[22.1-3]= 5.0. Note that when the SPSR is greater than or equal to 7 the offset value is 0 and therefore the MSPSR=SPSR.

In alternative embodiments, the offset value is eliminated from the equation for calculating the blood glucose value as follows:

Blood Glucose Level=Valid *ISIG***MSPSR*.

The threshold value of 7 and the associated offset of 3 have been empirically selected based on the characteristics observed from testing a particular type of glucose sensors **12**, such as those described in U.S. Pat. No. 5,391,250 entitled "Method of Fabricating Thin Film Sensors", and U.S. patent application Ser. No. 60/121,655 filed on Feb. 25, 1999, entitled "Glucose Sensor Set", incorporated by reference herein. Other threshold values may be used in conjunction with other offset values to optimize the accuracy of the calculated MSPSR for various types of glucose sensors **12** and sensors used to detect other body characteristics. In fact, many threshold values may be used to select between many offset values. An example using two different threshold values (4 and 7) to select between three different offset values (5, 3 and 0) follows:

If the SPSR<4, then use an offset value of 5, else

if 4<=SPSR<7, then use an offset value of 3, else

if SPSR>=7 use an offset value of 0.

In preferred embodiments the MSPSR is compared to a valid sensitivity range to determine if the newly calculated MSPSR is reasonable. In order to identify potential system problems, a valid MSPSR range of 1.5 to 15 is employed. This range has been determined based upon valid glucose sensor sensitivity measurements made in-vitro. MSPSR values outside this range result in a calibration error alarm (CAL ERROR) to notify the user of a potential problem. Other valid sensitivity ranges may be applied depending on the types of sensors to be calibrated, the range of acceptable sensitivity levels for the various sensor types, the manufacturing consistency expected for the sensors, environmental conditions, how long the sensor has been in use, or the like.

Preferred embodiments augment the single-point calibration technique using a modified linear regression technique (shown in a block diagram in FIG. **15**) when more than one paired calibration data point is available. As shown in FIG. **14**, the paired calibration data points **800** are linearly regressed by a least squares method to calculate the best fit straight line **802** correlated with paired calibration data points **800**. The slope of the line resulting from the linear regression is the linear regression sensitivity ratio (LRSR) used as the calibration factor to calibrate the glucose monitor **100**. The linear regression calibration equation is as follows:

$$LRSR = \frac{\sum_{i=1}^{N} [X_i Y_i]}{\sum_{i=1}^{N} [X_i^2]}$$

Where X_i is the ith Valid ISIG value of paired calibration data points,

Y_i is the ith Blood Glucose Reference Reading of paired calibration data points and,

N is the total number of paired calibration data points used for calibration.

i is the identification number of a particular paired calibration data point.

Therefore, the calibrated blood glucose level is,

Blood Glucose Level=Valid *ISIG***LRSR*.

Note that this linear regression uses a fixed intercept of zero (in other words, when the Valid ISIG is 0 the blood glucose value is 0) and therefore the linear regression method estimates only one regression parameter, the slope. In alternative embodiments, other linear regression methods may be used that estimate additional regression parameters such as an offset value.

Additionally, particular embodiments use an offset value in a modified linear regression calibration equation. The purpose of the offset value, as described above for the single-point calibration, is to compensate for the observation that more sensitive glucose sensors **12** often have a less linear performance at very high blood glucose levels. If the LRSR for a particular glucose sensor **12**, as calculated in the linear regression calibration equation above, is less than a sensitivity threshold value, then a modified linear regression sensitivity ratio (MLRSR) is calculated using an offset value included in a modified linear regression calibration equation. In preferred embodiments, the threshold value is 7. When the initial calculation of the LRSR is less than 7, an offset value of 3 is used to calculate the MLRSR. If the initial calculation of LRSR yields a value of 7 or greater, then the offset value is 0. Thus, the MLRSR is calculated using the

offset value in the modified linear regression calibration equation, thus:

$$MLRSR = \frac{\sum_{i=1}^{N} [(X_i - \text{offset})Y_i]}{\sum_{i=1}^{N} (X_i - \text{offset})^2}$$

Therefore, the calibrated blood glucose level is,

Blood Glucose Level=(Valid *ISIG*-offset)**MLRSR*.

Just as in the case of single-point calibration techniques described above, other threshold values may be used in conjunction with other offset values in the modified linear regression calibration equation to optimize the accuracy of the calculated MLRSR for various types of glucose sensors **12** and other characteristic sensors.

In preferred embodiments the MLRSR is compared to a valid sensitivity range to determine if the newly calculated MLRSR is reasonable. In order to identify potential system problems, a valid MLRSR range of 2.0 to 10.0 is employed. MLRSR values outside this range result in a calibration error alarm (CAL ERROR) to notify the user of a potential problem. As described above for the single-point calibration techniques, other valid sensitivity ranges may be applied.

In preferred embodiments, the glucose monitor data is linearly regressed over a 24 hour period (or window), and new sensitivity ratios are used for each 24 hour time period. In alternative embodiments, the time period may be reduced to only a few hours or enlarged to cover the entire monitoring period with the glucose sensor (i.e., several days—or even weeks with implanted sensors). In further embodiments, the time window may be fixed at a predetermined size, such as 24 hours, 12 hours, 6 hours, or the like, and the window is moved along over the operational life of the sensor.

In particular embodiments, paired calibration data points from measurements taken before the last calibration may be used to calculate a new sensitivity ratio. For example, to calibrate the glucose monitor every 6 hours, a paired calibration data point is established every 6 hours. And the linear regression technique described above is executed using 4 paired calibration data points, the most recently acquired point and points from 6, 12 and 18 hours before. Alternatively, the number of paired calibration data points used in the calibration may be as few as one or as large as the total number of paired calibration data points collected since the glucose sensor was installed. In alternative embodiments, the number of paired calibration data points used in a calibration equation may grow or shrink during the life of the glucose sensor due to glucose sensor anomalies.

In still other embodiments, the decay characteristics of the glucose sensor **12** over time may be factored into the equation to account for typical degradation characteristics of the glucose sensor **12** due to site characteristics, enzyme depletion, body movement, or the like. Considering these additional parameters in the calibration equation will more accurately tailor the calibration equation used by the glucose monitor **100** or post processor **200**. In particular embodiments, other parameters may be measured along with the blood glucose such as, temperature, pH, salinity, and the like. And these other parameters are used to calibrate the glucose sensor using non-linear techniques.

In alternative embodiments, the calibration factor may be calculated by first using a single-point technique to calculate the MSPSR for each paired calibration data point and then averaging them together, either unweighted or weighted by temporal order of by elapsed time. In other alternative embodiments, other straight line curve fitting techniques may be used to calculate a slope to be used as the SR. In additional alternative embodiments, other non-regressive curve fitting techniques may be used to generate equations that express the blood glucose level relative to the Valid ISIG. The equations may be polynomial, parabolic, hyperbolic, asymptotic, logarithmic, exponential, or the like. In these embodiments, the SR is not a single value (such as a slope) but rather an equation representing a curve that is used to convert the Valid ISIG from the glucose sensor **12** to a blood glucose value in the glucose monitor **100** or a post processor **200**. This method is especially effective when using sensors that produce signals that are not linearly proportional to the characteristic being measured across the entire range of measurement.

As discussed, preferred embodiments utilize a least squares linear regression equation to calibrate the glucose monitor **100** or post-processor **200** to analyze the sensor data. However, alternative embodiments may utilize a multiple component linear regression, or equations with more variables than just the paired calibration data points, to account for additional calibration effecting parameters, such as environment, the individual user's characteristics, sensor lifetime, manufacturing characteristics (such as lot characteristics), deoxidization, enzyme concentration fluctuation or degradation, power supply variations, or the like. Still other alternative embodiments may utilize singular and multiple, non-linear regression techniques.

In preferred embodiments, after the first calibration is performed on a particular glucose sensor **12**, subsequent calibrations employ a weighted average using a sensitivity ratio (SPSR, MSPSR, LRSR, or MLRSR) calculated from data collected since the last calibration, and previous sensitivity ratios calculated for previous calibrations. So the initial sensitivity ratio (SR**1**) is calculated immediately after initialization/stabilization using a paired calibration data point and is used by the glucose monitor **100** or the post processor **200** until the second sensitivity ratio (SR**2**) is calculated. The second sensitivity ratio (SR**2**) is an average of SR**1** and the sensitivity ratio as calculated using the paired calibration data points since the initial calibration (SRday**1**). The equation is as follows:

$$SR2 = \frac{(SR1 + SRday1)}{2}$$

The third sensitivity ratio (SR**3**) is an average of SR**2** and the sensitivity ratio as calculated using the paired calibration data points since the second calibration (SRday**2**). The equation is as follows:

$$SR3 = \frac{(SR2 + SRday2)}{2}$$

The sensitivity ratios for successive days use the same format, which is expressed below in generic terms:

$$SR_n = \frac{(SR_{(n-1)} + SRday_{(n-1)})}{2}$$

Where SR_n is the new sensitivity ratio calculated at the beginning of time period, n, using data from time period (n−1), to be used by a real time glucose monitor **100**, to convert Valid ISIGs to blood glucose readings throughout time period, n.

$SR_{(n-1)}$ is the previous sensitivity ratio calculated at the beginning of time period, n−1, using data from time period (n−2).

$SRday_{(n-1)}$) is the sensitivity ratio calculated using paired calibration data points collected since the last calibration.

Alternatively, the previous sensitivity ratios may be ignored and the SR is calculated using only the paired calibration data points since the last calibration. Another alternative is to equally average all previous SRs with the latest SR calculated using only the paired calibration data points since the last calibration. In alternative embodiments, the paired calibration data points are used to establish an equation for a curve representing SR over time. The curve is then used to extrapolate SR to be used until the next paired calibration data point is entered.

In embodiments that use a post processor **200** to evaluate the sensitivity ratio, the sensitivity ratio is calculated using paired calibration data points over a period of time since the last calibration and is not averaged with previous SRs. The sensitivity ratio for a period of time can then be applied to the same period of time over which the paired calibration data points were collected. This is more accurate than the real-time case described above for the glucose monitor **100** because, in the real-time case, sensitivity ratios from a previous time period must be used to calculate the blood glucose level in the present time period. If the sensitivity ratio has changed over time, the calculation of blood glucose using an old sensitivity ratio introduces an error.

In particular embodiments, once calibration is complete, Valid ISIG values are converted to blood glucose readings based on a particular version of the sensitivity ratio, and the resulting blood glucose readings are compared to an out-of-range limit. If the resulting calculated blood glucose level is greater than a maximum out-of-range limit of 200 mg/dl (or equivalently 3600 mmol/l), the out-of-range alarm is activated. This is a calibration cancellation event, therefore, ISIG values are no longer valid once this alarm is activated. The blood glucose readings are either not calculated, or at least not considered reliable, until the glucose monitor **100** or post processor **200** is re-calibrated. The user is notified of the alarm and that re-calibration is needed.

In alternative embodiments, higher or lower maximum out-of-range limits may be used depending on the sensor characteristics, the characteristic being measured, the user's body characteristics, and the like. In particular embodiments, a minimum out-of-range limit may be used or both a maximum and a minimum out-of-range limits may be used. In other particular embodiments, the out-of-range limits do not cause the blood glucose readings to become invalid and/or re-calibration is not required; however, an alarm could still be provided. In additional particular embodiments, more than one ISIG value must exceed an out-of-range limit before an alarm is activated of a calibration cancellation event is triggered. The ISIG values that are out-of-range are not used to display a blood glucose value.

In alternative embodiments, calibration is conducted by injecting a fluid containing a known value of glucose into the site around the glucose sensor set **10**, and then one or more glucose sensor readings are sent to the glucose monitor **100**. The readings are processed (filtered, smoothed, clipped, averaged, and the like) and used along with the known glucose value to calculate the SR for the glucose sensor **12**. Particular alternative embodiments, use a glucose sensor set of the type described in U.S. Pat. No. 5,951,521 entitled "A Subcutaneous Implantable Sensor Set Having the Capability To Remove Or Deliver Fluids To An Insertion Site".

In other alternative embodiments, the glucose sensor **12** is supplied with a vessel containing a solution with a known glucose concentration to be used as a reference, and the glucose sensor **12** is immersed into the reference glucose solution during calibration. The glucose sensor **12** may be shipped in the reference glucose solution. As described above, the glucose sensor readings are used to calculate a sensitivity ratio given the known glucose concentration of the solution.

In another alternative embodiment, the glucose sensors **12** are calibrated during the manufacturing process. Sensors from the same manufacturing lot, that have similar properties, are calibrated using a sampling of glucose sensors **12** from the population and a solution with a known glucose concentration. The sensitivity ratio is provided with the glucose sensor **12** and is entered into the glucose monitor **100** or the post processor **200** by the user or another individual.

While the description above refers to particular embodiments of the present invention, it will be understood that many modifications may be made without departing from the spirit thereof. The accompanying claims are intended to cover such modifications as would fall within the true scope and spirit of the present invention.

The presently disclosed embodiments are therefore to be considered in all respects as illustrative and not restrictive, the scope of the invention being indicated by the appended claims, rather than the foregoing description, and all changes which come within the meaning and range of equivalency of the claims are therefore intended to be embraced therein.

What is claimed is:

1. A method of calibrating glucose monitor data, the method comprising the steps of:

sampling glucose monitor data at a predetermined rate from a glucose sensor over a period of time;

deriving at least one glucose monitor data point from the sampled glucose monitor data at a predetermined memory storage rate;

obtaining at least one blood glucose reference reading from a blood glucose measuring device that corresponds with the at least one glucose monitor data point;

calculating a calibration factor using the at least one blood glucose reference reading and the corresponding at least one glucose monitor data point; and

interpreting the sampled glucose monitor data collected during the period of time retrospectively using the calibration factor post process.

2. The method of claim **1**, wherein the step of calculating a calibration factor further includes taking account of at least one previous calibration factor to calculate a new calibration factor.

3. The method of claim **1**, wherein the at least one blood glucose reference reading is at least two blood glucose reference readings and the step of calculating the calibration factor uses the at least two blood glucose reference readings and the corresponding at least one glucose monitor data point.

4. The method of claim **3**, wherein a calculation of the calibration factor is obtained using linear regression.

5. The method of claim **4**, wherein the linear regression is least squares linear regression.

6. The method of claim **1**, wherein a calculation of the calibration factor is obtained using non-linear regression.

7. The method of claim **1**, wherein a calculation of the calibration factor is obtained using a non-regression technique.

8. The method of claim 1, wherein the predetermined memory storage rate is once every 5 minutes.

9. The method of claim 1, wherein the glucose monitor data point that is derived at a predetermined memory storage rate is the result of utilizing at least 2 sampled values sampled from the glucose sensor at a rate faster than the memory storage rate.

10. The method of claim 1, wherein at least one blood glucose reference reading is obtained during at least one predetermined calibration period, and wherein the calibration factor is calculated using at least one blood glucose reference reading after every predetermined calibration period.

11. The method of claim 10, wherein the at least one predetermined calibration period is 24 hours.

12. The method of claim 1, wherein one or more calculations for calculating a first calibration factor is different than one or more calculations for calculating all subsequent calibration factors.

13. The method of claim 12, wherein the calculation for calculating the first calibration factor uses a single-point calibration equation.

14. The method of claim 13, wherein the single-point calibration equation includes an offset value.

15. The method of claim 13, wherein the calculation for calculating the subsequent calibration factors uses a linear regression calibration equation.

16. The method of claim 13, wherein the calculation for calculating the subsequent calibration factors uses a non-linear regression calibration equation.

17. The method of claim 13, wherein the calculation for calculating the subsequent calibration factors uses a non-regression calibration equation.

18. The method of claim 1, wherein a predetermined time shift is used to temporally correlate the at least one blood glucose reference reading from a blood glucose measuring device with the at least one glucose monitor data point obtained at the predetermined memory storage rate.

19. The method of claim 18, wherein the predetermined time shift is ten minutes.

20. The method of claim 1, wherein the calibration factor is a non-linear calibration equation.

21. A method of calibrating glucose monitor data, the method comprising the steps of:

sampling glucose monitor data from a sensor;

deriving interval values by applying clipping limits and averaging the post-clipped sampled glucose monitor data over a predetermined interval rate;

deriving, at least one glucose monitor data point by averaging the derived interval values at a predetermined memory storage rate;

obtaining from another blood glucose measuring device at least one blood glucose reference reading that is temporally associated with at least one glucose monitor data point;

determining a calibration equation using the at least one blood glucose reference reading and the corresponding at least one glucose monitor data point; and

calibrating the sampled glucose monitor data using the calibration equation.

22. The method of claim 21, wherein the step of averaging the sampled glucose monitor data over a predetermined interval rate ignores a high and a low sampled value over the interval.

23. The method of claim 21, wherein the step of averaging the derived interval values over a predetermined memory storage rate ignores a high and a low derived interval value obtained during one cycle of the predetermined memory storage rate.

24. The method of claim 21, wherein the calculation of the calibration equation is obtained using linear regression.

25. The method of claim 24, wherein the linear regression is a least squares linear regression.

26. The method of claim 21, wherein the calculation of the calibration equation is obtained using non-linear regression.

27. The method of claim 21, wherein the calculation of the calibration equation is obtained using a non-regression technique.

28. The method of claim 21, wherein the method further comprises the step of shifting the data by a predetermined time factor.

29. The method of claim 21, wherein the calibration is performed while sampling the glucose monitor data.

30. The method of claim 21, wherein the calibration is performed retrospectively on the sampled glucose monitor data that has been collected for post processing using the calibration equation post process.

31. The method of claim 21, wherein one or more calculations for calculating a first calibration factor is different than one or more calculations for calculating all subsequent calibration factors.

32. The method of claim 31, wherein the one or more calculations for calculating subsequent calibration factors employ a weighted average using a calibration factor calculated from data collected since the last calibration and previous calibration factors calculated for previous calibrations.

33. The method of claim 31, wherein the calculation for calculating a first calibration factor uses a single-point calibration equation.

34. The method of claim 33, wherein the single-point calibration equation includes an offset value.

35. The method of claim 33, wherein the calculation for calculating the subsequent calibration factors uses a linear regression calibration equation.

36. The method of claim 33, wherein the calculation for calculating the subsequent calibration factors uses a non-linear regression calibration equation.

37. The method of claim 33, wherein the calculation for calculating the subsequent calibration factors uses a non-regression calibration equation.

38. An apparatus to calibrate glucose monitor data, the apparatus comprising:

means for sampling glucose monitor data;

means for deriving at least one glucose monitor data reading from the sampled glucose monitor data at a determined memory storage rate,

means for obtaining from another blood glucose measuring device at least one blood glucose reference reading that is temporally associated with at least one glucose monitor data reading;

means for determining a calibration equation using the at least one blood glucose reference reading and the corresponding at least one glucose monitor data reading; and

means for interpreting the sampled glucose monitor data collected during the period of time retrospectively using the calibration equation post process.

39. An article of manufacture containing code for calibrating glucose monitor data, comprising a computer usable media including at least one embedded computer program that is capable of causing at least one computer to perform:

sampling glucose monitor data from a sensor;

deriving interval values by applying clipping limits and averaging the post-clipped sampled glucose monitor data over a predetermined interval rate;

deriving at least one glucose monitor data point by averaging the derived interval values at a predetermined memory storage rate;

obtaining from another blood glucose measuring device at least one blood glucose reference reading that is temporally associated with at least one glucose monitor data point;

determining a calibration equation using the at least one blood glucose reference reading and the corresponding at least one glucose monitor data point; and

calibrating the sampled glucose monitor data using the calibration equation.

40. The article of manufacture of claim **39**, wherein the step of averaging the sampled glucose monitor data over a predetermined interval rate ignores a high and a low sampled value over the interval.

41. The article of manufacture of claim **39**, wherein the step of averaging the derived interval values over a predetermined memory storage rate ignores a high and a low derived interval value obtained during one cycle of the predetermined memory storage rate.

42. The article of manufacture of claim **39**, wherein the calculation of the calibration equation is obtained using linear regression.

43. The article of manufacture of claim **42**, wherein the linear regression is a least squares linear regression.

44. The article of manufacture of claim **39**, wherein the calculation of the calibration equation is obtained using non-linear regression.

45. The article of manufacture of claim **39**, wherein the calculation of the calibration equation is obtained using a non-regression technique.

46. The article of manufacture of claim **39**, wherein the method further comprises the step of shifting the data by a predetermined time factor.

47. The article of manufacture of claim **39**, wherein the calibration is performed while sampling the glucose monitor data.

48. The article of manufacture of claim **39**, wherein the calibration is performed retrospectively on the sampled glucose monitor data that has been collected for post processing using the calibration equation post process.

49. A method of calibrating characteristic monitor data, the method comprising the steps of:

sampling characteristic monitor data;

deriving interval values by applying clipping limits and averaging the post-clipped sampled characteristic monitor data over a predetermined interval rate;

deriving at least one characteristic monitor data point by averaging the derived interval values at a predetermined memory storage rate;

obtaining from another characteristic measuring device at least one characteristic reference reading that is temporally associated with at least one characteristic monitor data point;

calculating calibration characteristics using the at least one characteristic reference reading and the corresponding at least one characteristic monitor data point; and

calibrating the obtained characteristic monitor data using the calibration characteristics.

50. A method of claim **49**, wherein the at least one characteristic reference reading is at least two characteristic reference readings.

51. A method of claim **50**, wherein a calculation for calculating the calibration characteristics is a linear regression calculation.

* * * * *

US006424847C1

(12) EX PARTE REEXAMINATION CERTIFICATE (5946th)

United States Patent

Mastrototaro et al.

(10) Number: US 6,424,847 C1

(45) Certificate Issued: Oct. 16, 2007

(54) **GLUCOSE MONITOR CALIBRATION METHODS**

(75) Inventors: **John J. Mastrototaro**, Los Angeles, CA (US); **Todd M. Gross**, Saugus, CA (US); **John J. Shin**, Glendale, CA (US)

(73) Assignee: **Medtronic Minimed, Inc.**, Northridge, CA (US)

Reexamination Request:
No. 90/007,042, May 19, 2004

Reexamination Certificate for:

Patent No.:	**6,424,847**
Issued:	**Jul. 23, 2002**
Appl. No.:	**09/511,580**
Filed:	**Feb. 23, 2000**

Related U.S. Application Data

(60) Provisional application No. 60/121,584, filed on Feb. 25, 1999, and provisional application No. 60/121,664, filed on Feb. 25, 1999.

(51) **Int. Cl.**
A61B 5/00 (2006.01)

(52) **U.S. Cl.** **600/316**; 600/365; 600/322

(58) **Field of Classification Search** ..... None
See application file for complete search history.

(56) **References Cited**

U.S. PATENT DOCUMENTS

5,771,890	A	6/1998	Tamada
6,088,608	A	7/2000	Schulman et al.
6,180,416	B1	1/2001	Kurnik et al.
6,233,471	B1	5/2001	Berner et al.
6,326,160	B1	12/2001	Dunn et al.

FOREIGN PATENT DOCUMENTS

WO	WO 99/58050	11/1999

OTHER PUBLICATIONS

U.S. Appl. No. 60/085,344, filed May 13, 1998, Berner et al.
Von Woedtke, et al, "In situ calibration of implanted electrochemical glucose sensors," Biomed. Biochim. Acta, 48(11–12), 943–952 (1989).
Poitout, V., et al., "Calibration in dogs of a subcutaneous miniaturized glucose sensor using a glucose meter for blood glucose determination," Biosensors & Bioelectronics 7:587–592 (1992).
Velho, G., et al., "Strategies for calibrating a subcutaneous glucose sensor," Biomed. Biochim. Acta 48(11–12):957–964 (1989).
Schmidtke, D.W., et al., "Accuracy of the One–Point in Vivo Calibration of Wired Glucose Oxidase Electrodes Implanted in Jugular Veins of Rats in Periods of Rapid Rise and Decline of the Glucose Concentration," Anal. Chem. 70.2149–2155 (1998).
Csöregi, E., et al., "Design, Characterization, and One–Point in Vivo Calibration of a Subcutaneously Implanted Glucose Electrode," Anal. Chem. 66:3131–3138 (1994).

Primary Examiner—Bibhu Mohanty

(57) **ABSTRACT**

A method of calibrating glucose monitor data includes collecting the glucose monitor data over a period of time at predetermined intervals. It also includes obtaining at least two reference glucose values from a reference source that temporally correspond with the glucose monitor data obtained at the predetermined intervals. Also included is calculating the calibration characteristics using the reference glucose values and the corresponding glucose monitor data to regress the obtained glucose monitor data. And calibrating the obtained glucose monitor data using the calibration characteristics is included. In preferred embodiments, the reference source is a blood glucose meter, and the at least two reference glucose values are obtained from blood tests. In additional embodiments, the calculation of the calibration characteristics is obtained using linear regression and in particular embodiments, least squares linear regression. Alternatively, the calculation of the calibration characteristics is obtained using non-linear regression.

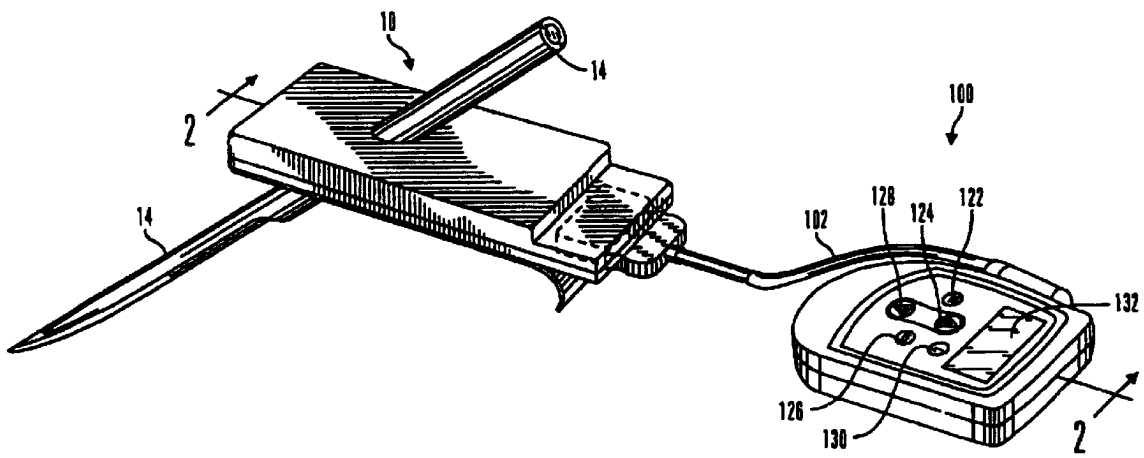

EX PARTE REEXAMINATION CERTIFICATE ISSUED UNDER 35 U.S.C. 307

THE PATENT IS HEREBY AMENDED AS INDICATED BELOW.

Matter enclosed in heavy brackets [ ] appeared in the patent, but has been deleted and is no longer a part of the patent; matter printed in italics indicates additions made to the patent.

ONLY THOSE PARAGRAPHS OF THE SPECIFICATION AFFECTED BY AMENDMENT ARE PRINTED HEREIN.

Column 1, lines 5–9:

This application claims priority on U.S. Provisional Application Ser. No. 60/121,584, filed Feb. 25, 1999 and entitled "Glucose Monitor Calibration Techniques Using Linear Regression" which is herein incorporated by reference in its entirety *and on U.S. Provisional Application Ser. No. 60/121,664, filed Feb. 25, 1999 and entitled "Glucose Monitor System" which is herein incorporated by reference in its entirety.*

AS A RESULT OF REEXAMINATION, IT HAS BEEN DETERMINED THAT:

The patentability of claims **21**–**37** and **39**–**51** is confirmed.

Claims **1** and **38** are determined to be patentable as amended.

Claims **2**–**20**, dependent on an amended claim, are determined to be patentable.

New claims **52**–**55** are added and determined to be patentable.

1. A method of calibrating glucose monitor data, the method comprising the steps of:

sampling glucose monitor data at a predetermined rate from a glucose sensor over a period of time *comprising a plurality of intervals at a predetermined interval rate*;

deriving at least one glucose monitor data point from the sampled glucose monitor data at a predetermined memory storage rate*, including deriving an interval value for each interval by averaging sampled values for the interval over the predetermined interval rate; and averaging derived interval values at the predetermined memory storage rate*;

obtaining at least one blood glucose reference reading from a blood glucose measuring device that corresponds with the at least one glucose monitor data point;

calculating a calibration factor using the at least one blood glucose reference reading and the corresponding at least one glucose monitor data point; and

interpreting the sampled glucose monitor data collected during the period of time retrospectively using the calibration factor post process.

38. An apparatus to calibrate glucose monitor data, the apparatus comprising:

means for sampling glucose monitor data *over a period of time comprising a plurality of intervals at a predetermined interval rate*;

means for deriving at least one glucose monitor data reading from the sampled glucose monitor data at a determined memory storage rate*, by first deriving an interval value for each interval by averaging sampled values for the interval over the predetermined interval rate, and second by averaging derived interval values at the predetermined memory storage rate*;

means for obtaining from another blood glucose measuring device at least one blood glucose reference reading that is temporally associated with at least one glucose monitor data reading;

means for determining a calibration equation using the at least one blood glucose reference reading and the corresponding at least one glucose monitor data reading; and

means for interpreting the sampled glucose monitor data collected during the period of time retrospectively using the calibration equation post process.

52. The method of claim 1, wherein the deriving at least one glucose monitor data point further includes applying clipping limits to the derived interval value prior to averaging the derived interval values.

53. The method of claim 52, wherein the deriving at least one glucose monitor data point further includes replacing any derived interval value outside of the clipping limits with the nearest clipping limit value.

54. The method of claim 38, wherein the deriving at least one glucose monitor data point further includes applying clipping limits to the derived interval value prior to averaging the derived interval values.

55. The method of claim 54, wherein the deriving at least one glucose monitor data point further includes replacing any derived interval value outside of the clipping limits with the nearest clipping limit value.

* * * * *