Trials@uspto.gov
571-272-7822

Paper No. 11
Entered: February 5, 2024

UNITED STATES PATENT AND TRADEMARK OFFICE

BEFORE THE PATENT TRIAL AND APPEAL BOARD

DEXCOM, INC.,
Petitioner,

v.

ABBOTT DIABETES CARE INC.,
Patent Owner.

IPR2023-01251
Patent 11,298,056 B2

Before JEFFREY N. FREDMAN, RYAN H. FLAX, and CYNTHIA M. HARDMAN, *Administrative Patent Judges*.

HARDMAN, *Administrative Patent Judge*.

DECISION
Granting Institution of *Inter Partes* Review
35 U.S.C. § 314

I. INTRODUCTION

Petitioner DexCom, Inc. requests *inter partes* review of claims 1–12, 14–28, and 30 of U.S. Patent No. 11,298,056 B2 ("the '056 patent," Ex. 1001). Paper 3 ("Pet."). Patent Owner Abbott Diabetes Care Inc. filed a Preliminary Response. Paper 7 ("Prelim. Resp."). With our authorization, Petitioner filed a Reply to Patent Owner's Preliminary Response (Paper 9, "Pet. Prelim. Reply"), and Patent Owner filed a Sur-Reply to Petitioner's Reply (Paper 10).

We have authority under 35 U.S.C. § 314(a), which provides that an *inter partes* review may not be instituted "unless . . . there is a reasonable likelihood that the petitioner would prevail with respect to at least 1 of the claims challenged in the petition." After considering the briefing and cited evidence of record, we institute an *inter partes* review.

The following preliminary findings of fact and conclusions of law are made solely for determining whether to institute review. Any final decision will be based on the full trial record.

A. Real Parties in Interest

Petitioner and Patent Owner each identify only themselves as the real party in interest. Pet. xiii; Paper 6 (Patent Owner Mandatory Notices), 1.

B. Related Matters

The parties identify as related the following matters involving the '056 patent: (i) *Abbott Diabetes Care Inc. et al. v. DexCom, Inc.*, No. 1:23-cv-00239 (D. Del.), filed March 3, 2023; and (ii) IPR2023-01252. Pet. xiii; Paper 6, 1.

C. The '056 Patent (Ex. 1001)

The '056 patent, titled "Methods and Systems for Early Signal Attenuation Detection and Processing," issued on April 12, 2022, from U.S. Application 17/411,154, filed on August 25, 2021, and claims priority, as a continuation, to several utility applications, the earliest of which was filed on April 28, 2010. Ex. 1001, codes (21), (22), (45), (63). The '056 patent also claims priority to a provisional application filed on April 29, 2009. *Id.* at code (60).[1] The '056 patent relates to devices and methods for analyte monitoring (e.g., glucose monitoring) and therapy management (e.g., using medication infusion devices). *Id.* at code (54), 1:52–54.

The Specification describes continuous analyte monitoring systems, discrete analyte monitoring systems, and therapy management systems. *Id.* at 1:57–59. One embodiment of a data monitoring and management system is depicted in Figure 1 of the '056 patent, reproduced below.

[1] The '056 patent issued from an application filed on August 25, 2021, Neither party takes a clear position on the applicable priority date, but both parties appear to assume that the priority date falls in the "2009–2010 timeframe," which appears to correspond to the April 29, 2009 filing date of the provisional application and the April 28, 2010 filing date of the earliest utility application in the familial chain. *See* Pet. 13; Prelim. Resp. 24. For purposes of this Decision, we similarly apply a priority date in the "2009–2010 timeframe."

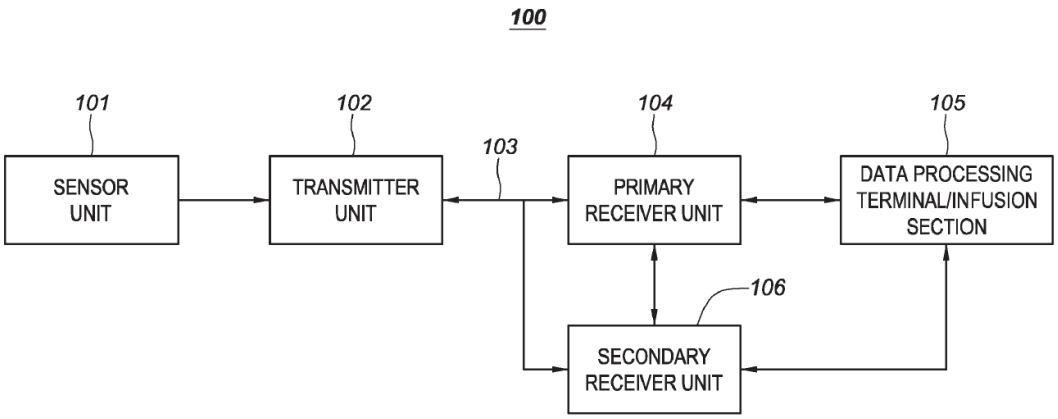

FIG. 1

Figure 1 of the ’056 patent is a block diagram of system 100, such as an analyte (e.g., glucose) monitoring system, for practicing one or more embodiments of the ’056 patent. *Id.* at 2:65–67, 4:34–37. This illustrated system is similar to those described in the Background section of the ’056 patent regarding prior-existing glucose monitoring components and systems. *Id.* at 1:24–48. The block diagram of system 100 includes sensor unit 101, data processing and transmitter unit 102, bi-directional communication link 103, primary receiver unit 104, data processing terminal/infusion section 105, and optional secondary receiver unit 106. *Id.* at 4:56–5:7.

Sensor unit 101 may be positioned in or on a user’s body, and may be configured to continuously sample an analyte level of the user and convert the sampled analyte level into a corresponding data signal for transmission by data processing and transmitter unit 102. *Id.* at 5:48–54. “[T]he data processing and transmitter unit 102 may be physically coupled to the sensor unit 101 so that both devices are integrated in a single housing and positioned on the user’s body.” *Id.* at 5:54–58. Data processing and transmitter unit 102 receives analyte level data from sensor unit 101,

processes the data, and transmits it to primary receiver unit 104. *Id.* at 5:50–64.

Primary receiver unit 104 processes the data from data processing and transmitter unit 102 by performing data decoding, error detection and correction, data clock generation, and data bit recovery. *Id.* at 6:28–33. Primary receiver unit 104 contains an analyte (e.g., blood glucose) test strip interface and may be configured to integrate or otherwise couple to an infusion device to administer insulin therapy to patients for administering and modifying basal profiles or determining appropriate boluses for administration based on the detected analyte levels. *Id.* at 6:65–7:5, 9:42–57.

Data processing terminal 105 communicates with and receives analyte level data from data processing and transmitter unit 102 and primary receiver unit 104, including data for managing the patient's insulin therapy. *Id.* at 4:61–5:1, 6:59–65, 7:20–25. Data processing terminal 105 may include a personal computer, a portable computer such as a laptop or a handheld device (e.g., a personal digital assistant (PDA)), or an infusion device such as an insulin infusion pump (external or implantable). *Id.* at 6:50–65, 7:20–25.

The '056 patent explains that periodic calibration of sensor unit 101 may be required for accurate calculation of a user's analyte level and "is used to ensure the analyte related data signals received at a transmitter unit 102 (and further transmitted to a receiver unit, such as the primary receiver unit 104) are correctly converted to corresponding analyte levels." *Id.* at 10:59–66. "The primary receiver unit 104 determines whether the sensor is calibrated and is in acceptable condition for further data processing." *Id.* at

11:44–49. If the sensor is calibrated and in condition for further data processing, the sensor data is further processed and output for display on a display unit of primary receiver unit 104 as a graphical representation or as numerical values, visual indicators, auditory outputs, or combinations thereof. *Id.* at 11:50–58, 12:15–20.

If the sensor conditions are unsuitable for calibration, the analyte sensor data is stored in a memory in primary receiver unit 104 and display of the sensor data is temporarily disabled until the sensor is calibrated again. *Id.* at 11:46–49, 12:5–15, 12:26–32. When the sensor data is displayed again, there may be a gap in the graphical display, as shown in Figure 7A. *Id.* at 12:32–39.

Figure 7A is reproduced below.

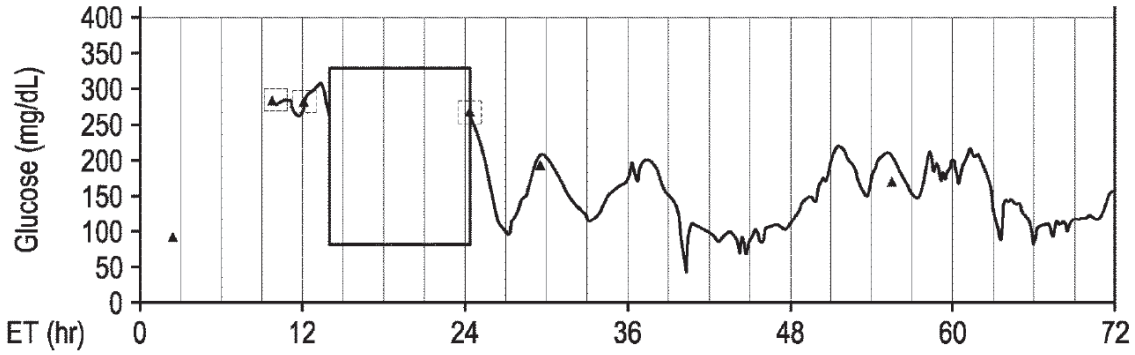

FIG. 7A

Figure 7A illustrates a graphical display of glucose level data in mg/dL over a span of several hours, with a gap in the graphed data (where no glucose measurements appear) caused by a period of uncalibrated sensor data indicated by a solid rectangle from about hour 14 to hour 24. *Id.* at 3:14–15, Fig. 7A. The ’056 patent describes a method for filling such a gap in Figure 6, which is reproduced below.

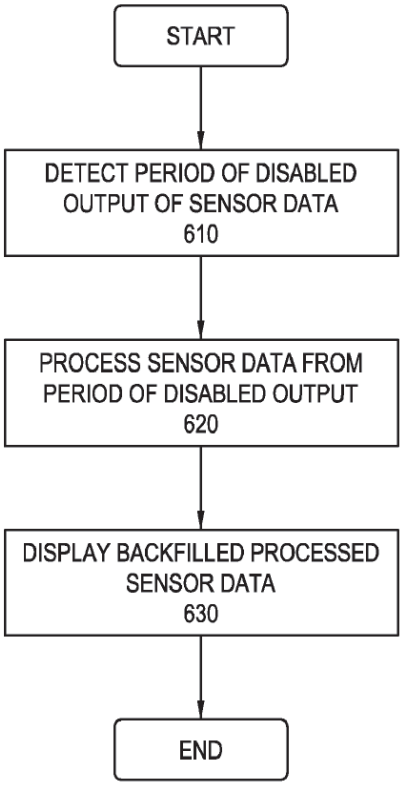

FIG. 6

Figure 6 is a flow chart illustrating a method for backfilling such display gaps in sensor data in one embodiment of the ’056 patent. *Id.* at 3:12–13. According to the ’056 patent, “when a scheduled calibration event fails and the associated grace period for calibration does not occur, the output display of the processed, calibrated sensor data is disabled (610).” *Id.* at 12:41–45. Once the system recovers after a successful calibration event, the previously unprocessed data during the display time out period (i.e., the data in the period of the gap) may be retrieved from storage and processed using the new calibration data 620. *Id.* at 12:47–54, 12:62–65. The newly-processed (“backfilled”) sensor data is then displayed and stored 630 as shown in Figure 7B, which is reproduced below. *Id.* at 12:45–47, 12:65–13:2.

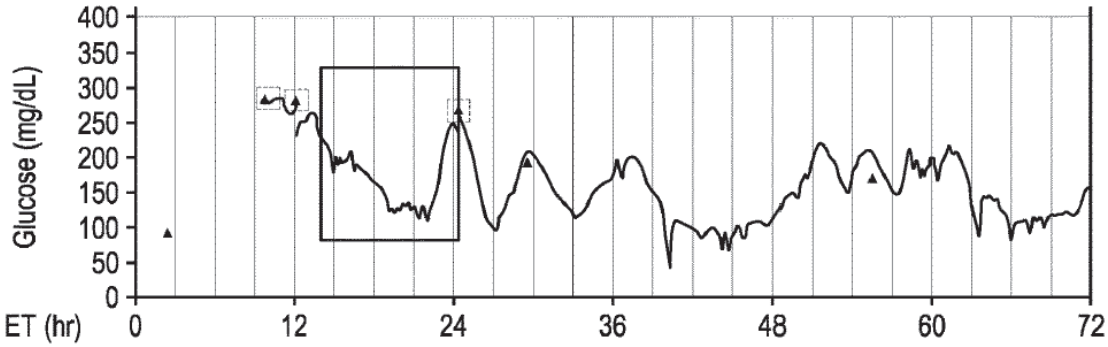

FIG. 7B

Figure 7B illustrates a graphical display of glucose level data in mg/dL over a span of several hours, with backfilled graphically-displayed data indicated by a solid rectangle, now showing a segment of a line graph representing glucose measurements, where the same rectangle in Figure 7A (above) did not. *Id.* at 3:14–15, Fig. 7B. The gap in the data from about hour 14 to hour 24 from Figure 7A has been backfilled according to the method described in Figure 6. *Id.* at 12:65–13:5.

D. The Challenged Claims

Petitioner challenges claims 1–12, 14–28, and 30 of the ’056 patent. Claim 1, the only independent claim, is reproduced below with bracketed lettering added:[2]

> 1. [A] A glucose monitoring system for backfilling data gaps that occur while a user monitors glucose levels, the glucose monitoring system comprising:
>
> [B] a glucose sensor, a portion of which is configured to be positioned under skin of the user, wherein the glucose sensor

[2] For ease of reference, we use the same bracketed lettering Petitioner uses in the Petition. *See, e.g.*, Pet. 30–46; *see also* Ex. 1049 (List of Challenged Claims).

is configured to sample a biological fluid of the user to provide sensor data;

[C] a data processing and transmitter unit coupled to the glucose sensor, the data processing and transmitter unit comprising a power supply, a processor of the data processing and transmitter unit, memory of the data processing and transmitter unit, and a radio frequency transceiver of the data processing and transmitter unit, wherein the data processing and transmitter unit is configured to:

[D] receive the sensor data from the glucose sensor and store the sensor data in the memory of the data processing and transmitter unit;

process the sensor data using calibration data to provide processed sensor data, wherein the calibration data comprises data associated with a sensitivity of the glucose sensor, and wherein the processed sensor data is stored in the memory of the data processing and transmitter unit; and

[E] transmit the processed sensor data over a Bluetooth wireless communication link using the radio frequency transceiver of the data processing and transmitter unit; and

[F] a receiver unit comprising a processor of the receiver unit, memory of the receiver unit, a radio frequency transceiver of the receiver unit, an antenna, and a display, wherein the receiver unit is configured to:

receive, using the antenna and the radio frequency transceiver of the receiver unit, the processed sensor data over the Bluetooth wireless communication link,

[G] output to the display of the receiver unit, a numerical value representing the processed sensor data,

[H] output to the display of the receiver unit, a first line graph that is a substantially continuous depiction of the processed sensor data over time,

> [I] wherein the glucose monitoring system is configured to detect an adverse condition, wherein the adverse condition results in the receiver unit displaying a data gap such that the first line graph displayed on the receiver unit has an end corresponding to a time associated with a start of the adverse condition;
>
> [J] wherein, during a time period corresponding to the adverse condition, sensor data, processed sensor data, or both, are stored in the memory of the data processing and transmitter unit;
>
> [K] wherein the receiver unit is configured to output to the display, after the adverse condition is corrected, processed sensor data for the time period corresponding to the adverse condition such that the data gap is backfilled, and
>
> [L] wherein the processed sensor data for the time period corresponding to the adverse condition that is outputted to the display after the adverse condition is corrected comprises a second line graph having a first end corresponding to the time associated with the start of the adverse condition and a second end corresponding to a time associated with an end of the adverse condition.

Ex. 1001, 15:24–16:20.

Challenged claims 2–12, 14–28, and 30 depend directly or indirectly from independent claim 1 and recite additional features of the glucose monitoring system. *Id.* at 16:22–18:28.

E. Asserted Grounds of Unpatentability

Petitioner asserts that claims 1–12, 14–28, and 30 are unpatentable on the following grounds:

Ground	Claim(s) Challenged	35 U.S.C. §[3]	Reference(s)/Basis
1	1–3, 5–8, 11, 12, 17–24, 26–28, 30	103	Patel-2009[4] and Paradigm REAL-Time[5]
2	4, 9, 10, 15, 16, 25	103	Patel-2009, Paradigm REAL-Time, and Causey[6]
3	1–12, 14–18, 20–28, 30	103	Patel-2008,[7] Mastrototaro,[8] Shahmirian,[9] and Causey

[3] The Leahy-Smith America Invents Act, Pub. L. No. 112-29, 125 Stat. 284 (2011) ("AIA"), amended several provisions of 35 U.S.C., including § 103. Given the indicated priority date of the '056 patent in the 2009–2010 timeframe for purposes of this Decision (*see supra* 3 n.1), we apply the pre-AIA version of § 103; however, our decision would be no different under the AIA version of the statute.

[4] Patel et al., U.S. Patent App. Pub. 2009/0085768 A1, published April 2, 2009 ("Patel-2009," Ex. 1012).

[5] Petitioner asserts that Paradigm REAL-Time (Ex. 1011) "consists of several pages published on the Medtronic Diabetes Website (www.medtronicdiabetes.com) at least by October 2007." Pet. 16; *see also* Ex. 1010 (Affidavit of Nathaniel E. Frank-White). Patent Owner does not presently challenge Petitioner's contention that Paradigm REAL-Time qualifies as prior art to the challenged claims. *See generally* Prelim. Resp.

[6] Causey, III et al., U.S. Patent 6,641,533 B2, issued November 4, 2003 ("Causey," Ex. 1017).

[7] Patel et al., U.S. Patent App. Pub. 2008/0119705 A1, published May 22, 2008 ("Patel-2008," Ex. 1015).

[8] Mastrototaro et al., U.S. Patent App. Pub. 2006/0202859 A1, published September 14, 2006 ("Mastrototaro," Ex. 1019).

[9] Shahmirian et al., U.S. Patent App. Pub. 2004/0122353 A1, published June 24, 2004 ("Shahmirian," Ex. 1023).

Pet. 4–5. Petitioner supports its contentions with the Declaration of Brian D. Gross (Ex. 1008), among other evidence.

II. ANALYSIS

A. Principles of Law

In an *inter partes* review, "the petitioner has the burden from the onset to show with particularity why the patent it challenges is unpatentable." *Harmonic Inc. v. Avid Tech., Inc.*, 815 F.3d 1356, 1363 (Fed. Cir. 2016) (citing 35 U.S.C. § 312(a)(3) (requiring *inter partes* review petitions to identify "with particularity . . . the evidence that supports the grounds for the challenge to each claim")). Petitioner ultimately bears the burden of persuasion to prove unpatentability of each challenged claim by a preponderance of the evidence. 35 U.S.C. § 316(e). This burden never shifts to Patent Owner. *See Dynamic Drinkware, LLC v. Nat'l Graphics, Inc.*, 800 F.3d 1375, 1378 (Fed. Cir. 2015). The Board may authorize an *inter partes* review if we determine that the information presented in the Petition and Patent Owner's Preliminary Response shows a reasonable likelihood that Petitioner will prevail with respect to at least one of the claims challenged in the petition. 35 U.S.C. § 314(a).

Under pre-AIA 35 U.S.C. § 103(a), a claim is unpatentable as obvious if the differences between the claimed subject matter and the prior art are such that the subject matter, as a whole, would have been obvious at the time the invention was made to a person having ordinary skill in the art to which said subject matter pertains. 35 U.S.C. § 103(a); *see also KSR Int'l Co. v. Teleflex Inc.*, 550 U.S. 398, 406 (2007). The question of obviousness is resolved based on underlying factual determinations including: (1) the scope and content of the prior art; (2) any differences between the claimed subject

matter and the prior art; (3) the level of ordinary skill in the art;[10] and (4) any objective indicia of nonobviousness.[11] *Graham v. John Deere Co.*, 383 U.S. 1, 17–18 (1966). An obviousness determination requires finding a reason to combine accompanied by a reasonable expectation of achieving what is claimed in the challenged patent. *See Intelligent Bio-Sys., Inc. v. Illumina Cambridge Ltd.*, 821 F.3d 1359, 1367 (Fed. Cir. 2016). "[A]ny need or problem known in the field of endeavor at the time of invention and addressed by the patent can provide a reason for combining the elements in the manner claimed." *KSR*, 550 U.S. at 419–20.

B. Level of Ordinary Skill in the Art

We consider the grounds of unpatentability in view of the understanding of a person of ordinary skill in the art at the time the invention was made.[12] *See Graham*, 383 U.S. at 17–18. Petitioner contends that a person of ordinary skill in the art (sometimes abbreviated herein as "POSITA") would have had:

> a Bachelor of Science degree in biomedical engineering, or a similar field, such as electrical, or software, or computer engineering, and two years of industry experience or research working with medical devices and systems for measuring biomedical signals. Such systems might include those for determining levels of blood analytes, such as glucose, in a patient and transmitting indications of such levels to a receiving device for reporting the measurements. Additional education,

---

[10] *See infra* Section II.B.

[11] Patent Owner does not presently assert any objective indicia of nonobviousness. *See generally* Prelim. Resp.

[12] For purposes of this Decision, we apply a priority date in the 2009–2010 timeframe. *See supra* 3 n.1.

> such as a Master's degree could substitute for the industry experience, or vice versa.

Pet. 13 (citing Ex. 1008 (Gross Decl.) ¶ 51). Patent Owner indicates that it does not dispute this portion of Petitioner's proposal. *See* Prelim. Resp. 24.

Petitioner also posits that "[t]he POSITA may be part of an interdisciplinary team with others having relevant experience and/or with clinicians involved in diagnosis, treatment, and patient management relevant to the use of medical devices for monitoring physiological signals" and "would have been aware of commercially available glucose monitoring systems (e.g., the Medtronic Paradigm® REAL-Time) through scientific journals and magazines," "would have known the importance of data reliability to glucose monitoring, including anticipating that errors (e.g., communication or calibration failures) would result in missing or inaccurate glucose data," and

> would have accounted for missing data using technical concepts known at the time, including programming glucose monitoring systems to detect failures that result in data being unavailable for display (e.g., due to a calibration error or loss of communication), preserving this data in memory, regenerating it once the system recovered, and displaying regenerated data.

Pet. 13–14 (citing Ex. 1008 (Gross Decl.) ¶¶ 52, 54–61). Patent Owner does not specifically comment on or dispute this portion of Petitioner's proposal. *See generally* Prelim. Resp.

Because Petitioner's full proposed level of ordinary skill in the art appears to be consistent with the cited prior art and is undisputed on this record, we adopt it for purposes of this Decision. *See Okajima v. Bourdeau*, 261 F.3d 1350, 1355 (Fed. Cir. 2001) (indicating that the prior art itself may reflect an appropriate skill level).

C. Claim Construction

In AIA proceedings we interpret a claim "using the same claim construction standard that would be used to construe the claim in a civil action under 35 U.S.C. 282(b)." 37 C.F.R. § 42.100(b). Under this standard, we construe the claim "in accordance with the ordinary and customary meaning of such claim as understood by one of ordinary skill in the art and the prosecution history pertaining to the patent." *Id.*

Neither party proposes that any claim term requires an express construction. *See* Pet. 14; Prelim. Resp. 24. We find it unnecessary to construe any claim term to decide whether Petitioner satisfies the "reasonable likelihood" standard for instituting trial. *See Nidec Motor Corp. v. Zhongshan Broad Ocean Motor Co.*, 868 F.3d 1013, 1017 (Fed. Cir. 2017) (noting that "we need only construe terms 'that are in controversy, and only to the extent necessary to resolve the controversy'" (quoting *Vivid Techs., Inc. v. Am. Sci. & Eng'g, Inc.*, 200 F.3d 795, 803 (Fed. Cir. 1999))).

Any final written decision entered in this case may include express claim constructions, or may include discussion of claim scope that differs from that provided in our analysis below. Any final claim constructions will be based on the full trial record.

D. Overview of Asserted Prior Art

1. Patel-2009 (Ex. 1012)

Patel-2009, titled "Glucose Sensor Transceiver," is the April 2, 2009 published version of U.S. Application 12/056,651, filed on March 27, 2008, and "relates to telemetered subcutaneous sensor devices and, more particularly, to devices for wireless communication between an implantable subcutaneous sensor set at a selected insertion site within the body of a user

and at least one of a plurality of remotely located therapy-related devices." Ex. 1012, code (54), ¶ 2. There is presently no dispute that Patel-2009 is prior art. *See generally* Prelim. Resp.

Figure 2 of Patel-2009 is reproduced below.

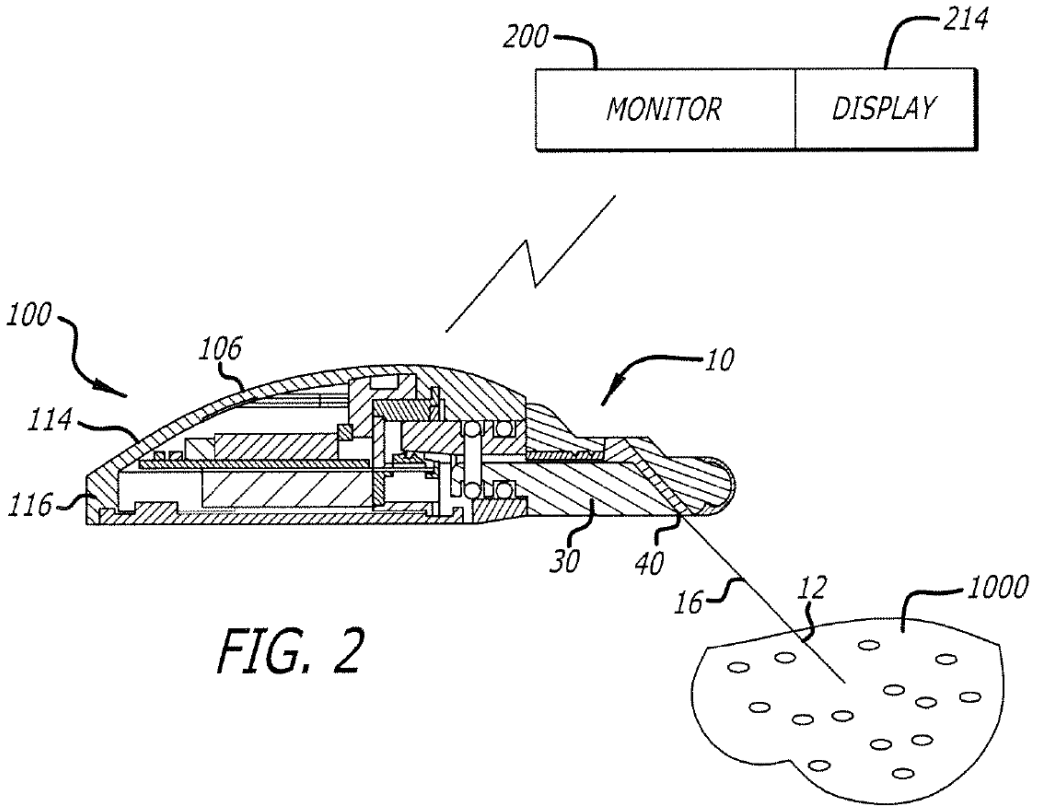

FIG. 2

Figure 2 depicts a longitudinal vertical section of a subcutaneous sensor insertion set and telemetered characteristic sensor transceiver device. Ex. 1012 ¶ 22. According to Patel-2009, the telemetered characteristic sensor system provides better treatment and glycemic control in an outpatient or home-use environment because it can provide glucose levels, hypoglycemia/hyperglycemia alerts, and outpatient diagnostics. *Id.* ¶ 40. The telemetered characteristic sensor system includes percutaneous sensor set 10, telemetered characteristic sensor transceiver device 100, and characteristic monitor 200. *Id.* Percutaneous sensor set 10 is placed

subcutaneously on a user and contains flexible sensor 12, a hollow, slotted insertion needle (not labeled), and cannula 16, which contains a sensing portion with sensor electrodes (not labeled). *Id.* ¶ 49.

The telemetered characteristic sensor transceiver device 100 receives a calibration value (e.g., from a blood glucose meter), converts raw sensor signals into calibrated processed glucose values using stored algorithms, and then transmits the calibrated glucose values to the characteristic monitor 200. Ex. 1012 ¶¶ 42–43, Fig. 9. The characteristic monitor may have a display to show the calibrated glucose values, may be a bed-side monitor for monitoring body characteristics of a patient, or may be a data receiver, storage, and/or transmitting device for later processing of the transmitted data or programming of the telemetered characteristic sensor transceiver device 100. *Id.* The telemetered characteristic sensor transceiver device 100 maintains multiple two-way communication links with other devices, such as infusion pumps, monitors, personal computers, PDAs, cellular phones, blood glucose meters, or hospital system devices. *Id.*; *see also id.* ¶ 76, Fig. 11.

2. Paradigm REAL-Time (Ex. 1011)

Paradigm REAL-Time comprises web pages, brochures, and user manuals for the Medtronic MiniMed Paradigm REAL-Time System, which Petitioner alleges were "published on the Medtronic Diabetes Website (www.medtronicdiabetes.com) at least by October 2007." Pet. 16. Petitioner asserts that these materials were recorded in October 2007 by the Internet Archive's Wayback Machine. *See id.* at 16–20; Ex. 1010 (Frank-White Affidavit). There is presently no dispute that Paradigm REAL-Time is prior art. *See generally* Prelim. Resp.

The Paradigm REAL-Time System includes the REAL-Time Continuous Glucose Monitoring System, MiniLink REAL-Time Transmitter, and MiniMed Paradigm 522/722 Insulin Pump. Ex. 1011, 23–24. The REAL-Time Continuous Glucose Monitoring System has a glucose sensor that is inserted through the skin and sends an electronic signal measuring the amount of glucose in the user's interstitial fluid. Ex. 1011, 23.

The MiniLink REAL-Time Transmitter receives and processes signals from the glucose sensor and wirelessly sends glucose values to the insulin pump. *Id.*

The MiniMed Paradigm 522/722 Insulin Pump displays glucose trend graphs, monitors glucose levels, shows the degree and direction of glucose trends, and can provide alarms when glucose levels go out of range, when calibration is due, and when there is a failed reception of sensor data from the transmitter to the pump. *Id.* at 24, 44–49.

3. Causey (Ex. 1017)

Causey, titled "Handheld Personal Data Assistant (PDA) with a Medical Device and Method of Using the Same," issued on November 4, 2003, from U.S. Application 09/935,827, which was filed on August 23, 2001, and "relates to remote programmers and/or handheld personal data assistants (PDA) for use with medical devices and, in particular embodiments, to a PDA that includes a medical device to facilitate testing and monitoring of a patient's condition with coordination of data management and programming through the PDA." Ex. 1017, codes (45), (21), (22), (54), 1:21–26. There is currently no dispute that Causey is prior art. *See generally* Prelim. Resp.

Causey describes a remote programmer and/or PDA that includes a characteristic monitor and/or a characteristic meter. Ex. 1017, 2:20–24. Causey Figure 30 is reproduced below.

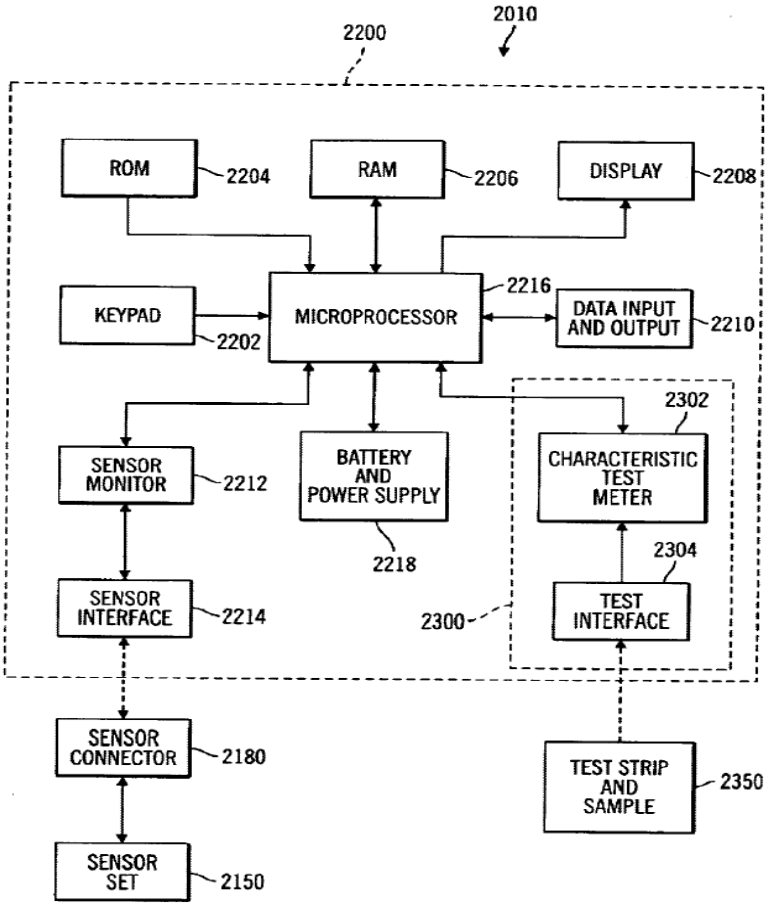

FIG. 30

Figure 30 depicts a simplified block diagram of characteristic monitor 2200 with a characteristic meter 2300. Ex. 1017, 8:9–11. The characteristic monitor 2200 includes display 2208, sensor set 2150, telemetered characteristic monitor transmitter 2100 (not labeled), keypad 2202, microprocessor 2216, data input and output (I/O) port 2210, characteristic meter 2300, sensor monitor 2212, sensor interface 2214, sensor connector 2180, battery and power supply 2218, test strip and sample 2350, ROM

2204, RAM 2206, and characteristic test meter 2302. *Id.* at 13:52–63, 15:59–65, Fig. 30.

The telemetered characteristic monitor transmitter communicates with a radio frequency programmer that programs and obtains data from an infusion pump, stores data from the sensor set 2150, and provides it to an infusion pump, characteristic monitor, or computer for analysis, and updates, programs, and calibrates the telemetered characteristic monitor transmitter. *Id.* at 14:8–20. The characteristic monitor displays trending information of the characteristic (e.g., rate of change of glucose), graphs of historical data, and average characteristic levels (e.g., glucose). *Id.* at 13:56–59. The display 2208 may also be used with the keypad 2202 on the characteristic monitor 2200 to program or update data in the characteristic monitor 2200. *Id.* at 15:57–59. For example, the display 2208 may show the calibrated data using results from the characteristic meter 2300 to provide a user with updated trend and glucose level data and to update and show differences between the data before and after calibration. *Id.* at 15:59–65.

4. Patel-2008 (Ex. 1015)

Patel-2008, titled "Systems and Methods for Diabetes Management Using Consumer Electronic Devices," is the May 22, 2008 published U.S. Application 11/931,363, which was filed on October 31, 2007, and relates to "diabetes management systems and, more particularly, to managing diabetes utilizing consumer electronic devices including cellular phones, MP3/digital audio players, personal digital assistants (PDAs), Smartphones, hybrid devices, and the like." Ex. 1015, codes (43), (21), (22), (54), ¶ 2. There is currently no dispute that Patel-2008 is prior art. *See generally* Prelim. Resp.

Patel-2008 discloses diabetes management systems that include a PDA/smartphone, a connector, and a glucose monitoring device. Ex. 1015 ¶ 33, Figs. 1–15. The glucose monitoring device includes a glucose transmitter and a subcutaneous glucose sensor. *Id.* The PDA/smartphone receives and manipulates data from the glucose sensor across the connector to display graphs, glucose trends, highs and lows, and to alert a user or others to out-of-range blood glucose readings, imminent or current hypo- or hyperglycemic events, sensor calibration requirements, and potential glucose crashes. *Id.* ¶¶ 31, 44, 46. The glucose sensor may require calibration after a certain amount of time has elapsed. *Id.* ¶ 54. The user calibrates the glucose sensor by entering a blood glucose value obtained from a finger stick meter, or the sensor has built-in calibration algorithms. *Id.*

5. Mastrototaro (Ex. 1019)

Mastrototaro, titled "Telemetered Characteristic Monitor System and Method of Using the Same," is the September 14, 2006 published U.S. Application 11/322,568, which was filed on December 30, 2005, and "relates to telemetered subcutaneous sensor devices and, in particular embodiments, to devices and methods for wireless communication between an implantable subcutaneous sensor set at a selected insertion site within the body of a user and a remotely located characteristic monitor." Ex. 1019, codes (43), (21), (22), (54), ¶ 2. There is currently no dispute that Mastrototaro is prior art. *See generally* Prelim. Resp.

Figure 1 of Mastrototaro is reproduced below.

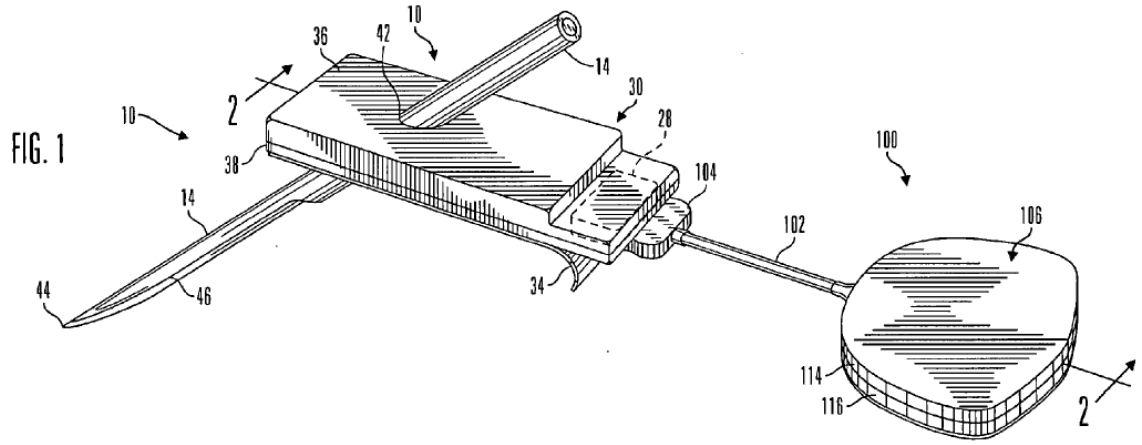

Figure 1 depicts a perspective view illustrating subcutaneous sensor insertion set 10 and telemetered characteristic monitor transmitter device 100, and a characteristic monitor (not shown, but see Fig. 13). Ex. 1019 ¶¶ 12, 36. The transmitter device provides for better treatment and control in an outpatient or home-use environment by indicating glucose levels, hypoglycemia/hyperglycemia alerts, and outpatient diagnostics. *Id.* ¶ 39. The percutaneous sensor set includes a flexible sensor, an insertion needle 14, and a cannula 16, which contains a sensing portion of the sensor that exposes one or more sensor electrodes to the user's bodily fluids. *Id.* ¶ 43.

The transmitter device 100 takes characteristic information (e.g., glucose data) from the percutaneous sensor set 10 and transmits it via wireless telemetry to the characteristic monitor. *Id.* ¶ 41. The characteristic monitor displays and logs the received glucose readings. *Id.* The logged data can be downloaded from the characteristic monitor to a personal computer or laptop for detailed data analysis. *Id.*

6. Shahmirian (Ex. 1023)

Shahmirian, titled "Relay Device for Transferring Information Between a Sensor System and a Fluid Delivery System," is the June 24, 2004 published U.S. Application 10/335,256, which was filed on December 31, 2002, and relates to a relay device that transfers information between a sensor system which measures a physiological characteristic level of a user and a fluid delivery system which infuses a fluid into a user. Ex. 1023, codes (43), (21), (22), (54), (57). There is currently no dispute that Shahmirian is prior art. *See generally* Prelim. Resp.

Figure 5(c) of Shahmirian is reproduced below.

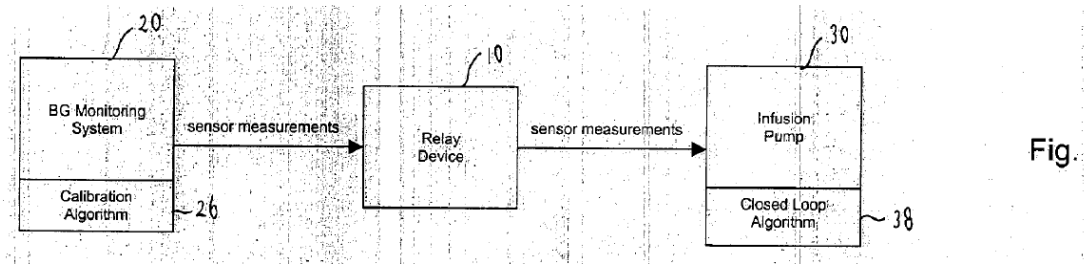

Fig. 5(c)

Figure 5(c) depicts a block diagram of a system for transferring information between a blood glucose monitoring system and an infusion pump through a relay device in accordance with embodiments of Shahmirian's invention. Ex. 1023 ¶ 42. The block diagram in the system of Figure 5(c) includes a blood glucose monitoring system 20 that contains a calibration algorithm 26, a relay device 10, and infusion pump 30 that contains a closed loop algorithm 38. *Id.* ¶¶ 102–06. The calibration algorithm 26 is used to convert sensor data into sensor measurements. *Id.* The sensor measurements are used in the closed loop algorithm 38 to generate fluid delivery commands to operate the infusion pump 30. *Id.*

In the system shown in Figure 5(c), the infusion pump 30 sends a signal to the blood glucose monitoring system 20 via the relay device 10

commanding the blood glucose monitoring system 20 to send sensor data to the infusion pump 30. Ex. 1023 ¶¶ 102–06. In response, the blood glucose monitoring system 20 sends calibrated sensor measurements to the infusion pump 30 through relay device 10, and infusion pump 30 saves the measurements in its memory. *Id.* Infusion pump 30 uses blood glucose level measurements from blood glucose monitoring system 20 in its closed loop algorithm 38 to automatically adjust the delivery of fluid, such as insulin, from infusion pump 30. *Id.* Infusion pump 30 also displays the sensor data on its display when the user selects the dedicated key. *Id.*

E. Ground 1 – Alleged Obviousness Over Patel-2009 and Paradigm REAL-Time

Petitioner asserts that claims 1–3, 5–8, 11, 12, 17–24, 26–28, and 30 are unpatentable as obvious over Patel-2009 and Paradigm REAL-Time. Pet. 15–61. At this stage of the proceeding, Patent Owner disputes Petitioner's contentions that the combination of Patel-2009 and Paradigm REAL-Time discloses claim elements [1.E], [1.F], [1.K], and [1.L], and that a person of ordinary skill in the art would have had a reason to combine the cited teachings of Patel-2009 and Paradigm REAL-Time. *See* Prelim. Resp. 27–41.

In brief, for independent claim 1, Petitioner relies on Patel-2009 and Paradigm REAL-Time as each disclosing a continuous glucose monitoring system that teaches or suggests most of the limitations of claim 1. *See generally* Pet. 30–48. However, for limitations [1.E] and [1.F], which recite that sensor data is transmitted over a "Bluetooth wireless communication link," Petitioner asserts that Patel-2009 discloses use of two-way wireless communication links and Paradigm REAL-Time discloses "using radio

frequency transmission with a six-foot range," but Petitioner does not assert that either reference expressly discloses use of Bluetooth. Pet. 38–40 (citing, *e.g.*, Ex. 1012 (Patel-2009) ¶¶ 8, 12, 13, 42, 43, 66, 76, 82, Figs. 2, 11; Ex. 1011 (Paradigm REAL-Time), 7–8, 23–26, 37, 43–51, 71; Ex. 1008 (Gross Decl.) ¶¶ 56, 61, 98, 99, 101, 102). Instead, Petitioner argues that "POSITAs would have found it obvious to configure Bluetooth communication links in order to extend the compatibility, operating range, and usability of the system via a standardized, well-established wireless communication protocol," and that "Bluetooth would have been chosen for communication with computers, PDAs, and cell phones as disclosed in Patel-2009." Pet. 40 (citing, *e.g.*, Ex. 1008 (Gross Decl.) ¶¶ 56, 61, 100, 102–04; Pet. 12).

As for a reason to combine Patel-2009 and Paradigm REAL-Time, Petitioner concedes that "Patel-2009 does not provide for glucose graphs to convey that glucose data is missing during failed communication or to display glucose data that is synchronized when communication is re-established," but contends that "POSITAs would have been motivated to detect missing or inaccurate glucose data and convey as much accurate glucose information to a user as possible without providing inaccurate information." Pet. 28–29 (citing Ex. 1008 (Gross Decl.) ¶¶ 55, 60, 80). Accordingly, Petitioner asserts that persons of ordinary skill in the art would have "naturally investigated Paradigm® REAL-Time," which Petitioner characterizes as "one of the leading continuous glucose monitoring systems of that time." *Id.* at 29.

Claim limitations [1.I]–[1.L] generally relate to a system configured to detect an adverse condition,[13] display a corresponding data gap in a line graph displayed on the receiver, store data during the adverse condition, and output to the display, after the adverse condition is corrected, processed sensor data for the time period corresponding to the adverse condition such that the data gap is backfilled in a second line graph. *See* Pet. 42–58. For these limitations, Petitioner relies on Paradigm REAL-Time, citing for example its disclosure that the "transmitter holds 40 minutes['] worth of memory, so . . . continuous glucose monitoring (CGM) data can be re-populated in the insulin pump." Pet. 45 (quoting Ex. 1011 (Paradigm REAL-Time), 8). Petitioner asserts that in the Paradigm REAL-Time System, "when transmission is out-of-range for less than 40 minutes, gaps in continuous glucose monitoring (CGM) data are entirely repopulated and do not persist in historical graphs." *Id.* (citing, *e.g.*, Ex. 1011 (Paradigm REAL-Time), 8; Ex. 1008 (Gross Decl.) ¶¶ 60, 112).

After considering the arguments and cited evidence of record (including Patent Owner's arguments discussed below), we determine that for purposes of institution, Petitioner sufficiently shows that the combination of Patel-2009 and Paradigm REAL-Time teaches or suggests each limitation of independent claim 1 and dependent claims 2, 3, 5–8, 11, 12, 17–24, 26–28, and 30, and that a person of ordinary skill in the art would have had a

[13] According to the '056 patent, "adverse conditions" refers to conditions "associated with the sensor monitoring system," which may include, by way of example, "one or more of a sensor instability condition, a calibration failure condition, or a monitoring system failure condition." Ex. 1001, 13:43–62.

reason to combine the teachings of Patel-2009 and Paradigm REAL-Time with a reasonable expectation of success. *See, e.g.*, Pet. 26–61. Accordingly, on this record, Petitioner shows a reasonable likelihood of prevailing on Ground 1. Nevertheless, we recognize that the issues in dispute are highly fact-intensive and implicate genuine issues of fact more appropriately resolved on a fully developed record. At this early stage, we offer the following observations on Patent Owner's arguments.

1. Whether the Asserted Combination Teaches or Suggests Backfill of Data Gap in a Line Graph on the Receiver Display in Accordance with Limitations [1.F]–[1.I], [1.K], and [1.L]

Patent Owner argues that "[t]he Paradigm® REAL-Time documentation does not disclose outputting to the display of the insulin pump, the alleged receiver, a line graph where the gap is subsequently backfilled," as generally required via claim limitations [1.F]–[1.I], [1.K], and [1.L]. Prelim. Resp. 28. More specifically, Patent Owner acknowledges that the Paradigm REAL-Time system "describes re-populating data in the memory of the insulin pump," but disputes that this repopulated data gets displayed on the insulin pump itself. *Id.* at 30. Rather, Patent Owner argues that the repopulated data in the insulin pump's memory is only available "to be uploaded to a computer for the purpose of historical reports and analysis" via use of separate software, called CareLink.[14] *See id.*

[14] Patent Owner explains that "Medtronic, the manufacturer of the Paradigm pump, also offered the CareLink™ Personal software." Prelim. Resp. 19 (citing Ex. 1011 (Paradigm REAL-Time), 11). This software was installed on a personal computer, and enabled a user to create historical reports. *Id.*

On the current record, we find that Petitioner has the better argument. First, Patent Owner does not dispute that "[t]he Paradigm® REAL-Time documentation discloses an insulin pump that displays a trend graph of the user's glucose data." Prelim. Resp. 2. Indeed, Paradigm REAL-Time discloses that "[y]our insulin pump displays glucose trend graphs for 3-hour and 24-hour periods," and states that the system has 90 days of memory, where the data can be downloaded to a personal computer or, "for immediate review, view up to 31 days of your personal history on your insulin pump screen." Ex. 1011 (Paradigm REAL-Time), 24, 26.

Paradigm REAL-Time explains that when a user is viewing a 3- or 24-hour trend graph, the user can "scroll through your sensor glucose data points and any alarms that you may have received." *Id.*; *see also* Pet. Prelim. Reply 3, 6 (discussing Paradigm REAL-Time's use of the term "History" in connection with 3- and 24-hour trend graphs). We reproduce below an example from Paradigm REAL-Time of a "3 hour graph" that can be viewed on the insulin pump's display:

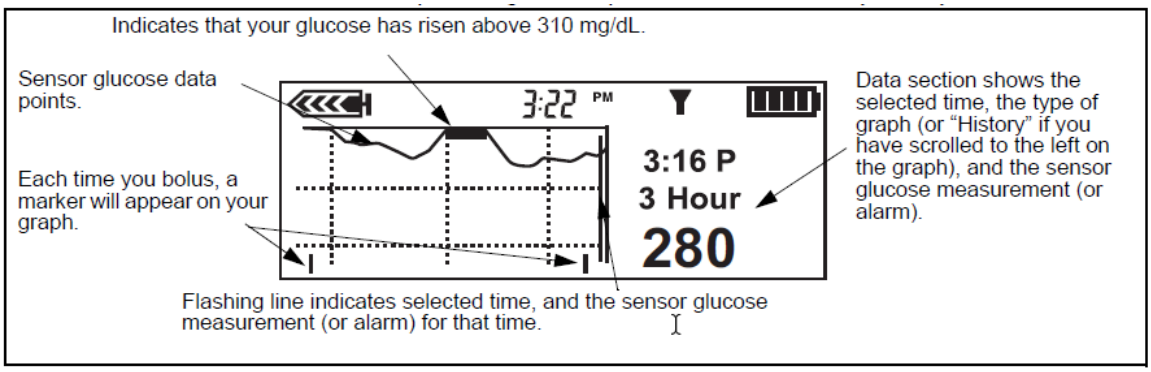

Ex. 1011 (Paradigm REAL-Time), 64. The graphic above includes a line graph of measured glucose data points, which includes "the current sensor glucose and the most recent three hours of data," and text indicating "the selected time" (here, three hours of data) and "the type of graph (or 'History'

if you have scrolled to the left on the graph), and the sensor glucose measurement (or alarm)." *Id.* These disclosures in Paradigm REAL-Time sufficiently support, for purposes of institution, that the Paradigm REAL-Time insulin pump displays trend graphs of the user's glucose data, including historical data.

As noted above, Patent Owner also does not dispute that the Paradigm REAL-Time system "describes re-populating data in the memory of the insulin pump." Prelim. Resp. 30. Indeed, in a "Frequently Asked Questions" ("FAQ") section regarding the MiniLink REAL-Time Transmitter, Paradigm REAL-Time contains the following question and answer:

> [Q:] How much data does the MiniLink REAL-Time Transmitter store? If I move outside of the six foot (two meters) transmission range - will I lose my data?
>
> [A:] When the MiniLink REAL-Time Transmitter is separated from the insulin pump for more than six feet (approximately 2 meters), the transmission is considered "out of range." The transmitter holds 40 minutes['] worth of memory, so even though your system is "out of range," continuous glucose monitoring (CGM) data ***can be re-populated in the insulin pump***.
>
> If your system is out-of-range for longer than 40 minutes, when reviewing ***historical reports*** you would notice "data gap" where information is missing during this period of time.

Ex. 1011 (Paradigm REAL-Time), 8 (emphasis added). Petitioner relies on this disclosure to argue that "when transmission is out-of-range for less than 40 minutes, gaps in continuous glucose monitoring (CGM) data are entirely repopulated and do not persist in ***historical graphs***." Pet. 45 (emphasis added).

Patent Owner contends that Petitioner's arguments amount to a "subtle, but critically misleading, rewriting" of Paradigm REAL-Time by "conflat[ing] trend graphs displayed on the Paradigm REAL-Time® Insulin Pump" (which Petitioner also calls "***historical graphs***"), "with ***historical reports***, which are PDF files generated by CareLink™ software on a PC." Prelim. Resp. 17 (emphasis added). Patent Owner argues:

> The distinction is critical because the Petition relies on FAQs about ***historical <u>reports</u>*** generated by the CareLink™ software as alleged evidence about trend graphs displayed on the user's insulin pump. Historical reports and ***trend graphs*** are not the same, nor are they generated or displayed on the same device.

Id. at 18.

On the current record, Patent Owner's arguments are unavailing. As discussed above, there appears to be no present dispute that the Paradigm REAL-Time system (1) repopulates data recorded during an adverse condition in the memory of the insulin pump, and (2) displays historical data. As such, we presently do not agree with Patent Owner's arguments seeking to limit Paradigm REAL-Time's mention of viewing backfilled data in "historical reports" to viewing backfilled data ***only*** on a PC using CareLink software, as opposed to viewing the backfilled data on line graphs that are displayed on the insulin pump. *See, e.g.*, Ex. 1011 (Paradigm REAL-Time), 8. Stated differently, on this record we do not agree with Patent Owner's arguments that "historical reports" are viewable only on a PC. This is because even if historical data is viewable in CareLink, it is also clear that the insulin pump itself displays historical data.

For example, Paradigm REAL-Time states:

> As long as the transmitter is within 6 feet (approximately 2 meters) of the insulin pump, continuous glucose monitoring (CGM) data will be displayed ***on the insulin pump's screen***. If the MiniLink REAL-Time Transmitter and insulin pump are out-of-range for longer than 40 minutes, ***only the last 40 minutes will be re-populated***.

Id. (emphasis added). We agree with Petitioner that this disclosure appears in a section of Paradigm REAL-Time relating to the MiniLink REAL-Time Transmitter, which "focuses on the interactions between the MiniLink and Paradigm devices, without any mention of the separate CareLink product." Pet. Prelim. Reply 6 (citing Ex. 1011 (Paradigm REAL-Time), 7–8). Thus, on this record, we agree with Petitioner that this disclosure (as well as other cited disclosures in Paradigm REAL-Time) appears to teach or suggest that "a data gap up to 40 minutes is re-populated to the screen of the user device (in this case, a pump)." *Id.* at 2.

That said, we provide guidance on Patent Owner's additional argument that "the Petition juxtaposes two annotated artist renderings of the Paradigm® REAL-Time Insulin Pump display taken from different chapters of the user guide to create the impression that the guide discloses displaying a data gap in a line graph that is subsequently filled in on the same display." Prelim. Resp. 31. Petitioner juxtaposes these two renderings in a composite figure, which we reproduce below:

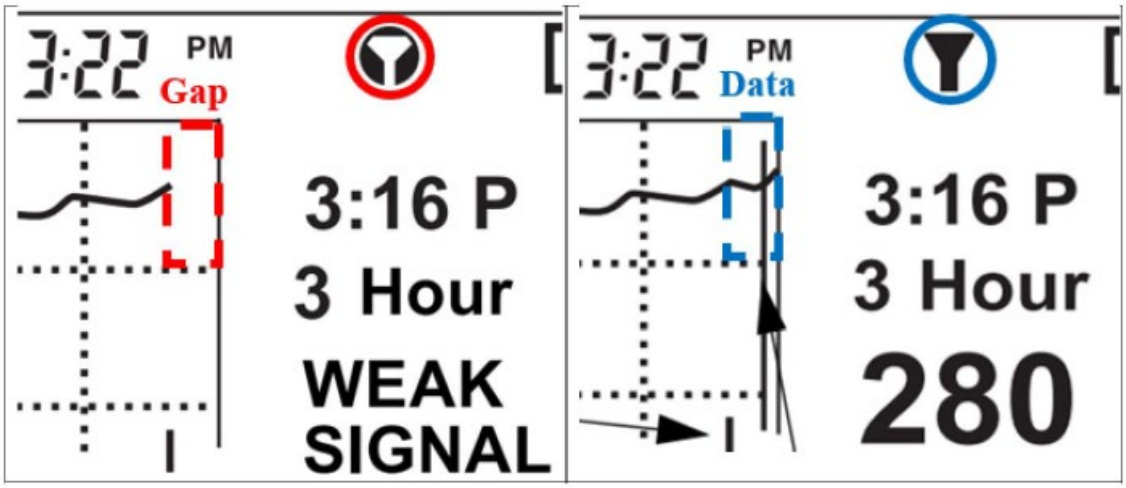

Pet. 47. In the composite figure reproduced above, Petitioner depicts on the left a portion of a 3-hour glucose graph with a data gap during "failed reception of sensor data from the transmitter to the pump" while "communication is lost." *Id.* at 46. Petitioner depicts on the right "[a] 3-hour graph . . . plotting the same glucose data without a data gap and while the transmitter is communicating with the pump." *Id.* Petitioner asserts that "[c]omparing these two graphs, POSITAs would recognize that a data gap existing during reception failure is re-populated once communication is re-established." *Id.* at 47–48 (citing, *e.g.*, Ex. 1011 (Paradigm REAL-Time), 64, 73; Ex. 1008 (Gross Decl.) ¶¶ 60, 115).

Patent Owner argues that the trend graphs excerpted in Petitioner's composite figure "are from two different chapters" of Paradigm REAL-Time's user guide, and "have no relation to one another." Prelim. Resp. 2. Patent Owner is correct that "the right portion of the composite figure is from a section of Chapter 5 of the user guide, titled 'Reading your graphs' (*see* Ex. 1011 at 64) whereas the left portion is from a portion of Chapter 6, titled 'Sensor alarm conditions' (*see id.* at 73)." Prelim. Resp. 32. On the current record, we agree with Patent Owner that "[n]either illustration is

described as being part of a sequence of events that includes the other illustration." *Id.* at 2–3. We presently agree with Patent Owner that "[t]here is no express or implicit disclosure in Ex. 1011 that the Chapter 5 rendering is showing a backfilled data gap from the Chapter 6 rendering." *Id.* at 33.

That said, on the current record, we find that for purposes of institution, Petitioner nevertheless adequately alleges that Paradigm REAL-Time teaches or suggests that a data gap in the line graphs is re-populated to the screen of the insulin pump. *See, e.g.*, Pet. 31, 45 (discussing how gaps in continuous glucose monitoring data are repopulated and do not persist in historical graphs on the insulin pump, and citing Ex. 1008 ¶¶ 60, 88–89, 112–113).

Patent Owner also argues that "Petitioner is effectively arguing that the Paradigm® REAL-Time documentation inherently discloses backfilling a data gap on the display," but "[n]owhere does the Petition argue that the disputed limitations are 'necessarily' present in the disclosures of the Paradigm® REAL-Time documentation." Prelim. Resp. 35. Patent Owner asserts that "a gap displayed on a trend graph certainly need not be backfilled and may remain a gap, as with Petitioner's past CGM products and the system described in the Patel-2008 reference relied on for Ground 3, which also do not backfill data gaps on their trend graph displays." *Id.* (citing Ex. 2001 (STS-7 User Guide), 38–40; Ex. 2002 (Dexcom G4 PLATINUM User Guide), 9, 93; Ex. 1015 (Patel-2008), Fig. 7(a)).

We do not presently agree with Patent Owner that the Petition asserts that Paradigm REAL-Time "inherently" discloses backfilling a data gap on the display. Instead, we understand the Petition to cite disclosures in Paradigm REAL-Time which teach or suggest that gaps in continuous

glucose monitoring data are repopulated and do not persist in historical graphs. *See, e.g.*, Pet. 31, 45–47.

2. Whether Petitioner Demonstrates an Adequate Reason to Combine Patel-2009 and Paradigm REAL-Time

Patent Owner argues that the Petition "fails to articulate a legally sufficient motivation to combine Patel-2009 and Paradigm® REAL-Time." Prelim. Resp. 35 (capitalization modified). In particular, Patent Owner cites Petitioner's stated reason of "providing accurate glucose concentrations and trend information in real-time" and "convey[ing] as much accurate glucose information to a user as possible without providing inaccurate information." *Id.* at 35–36 (quoting Pet. 29). Patent Owner asserts that these reasons are "divorced from the references [Petitioner] relies on," because "[a]t most," Paradigm REAL-Time's "historical reports are not generated by or displayed on the Paradigm® REAL-Time Insulin Pump." *Id.* at 36.

Patent Owner's argument appears to essentially repackage its argument that Paradigm REAL-Time does not teach or suggest that a data gap in the line graphs is re-populated to the screen of the insulin pump. For the reasons discussed above, on the current record we find Patent Owner's argument unavailing.

3. Whether the Asserted Prior Art Combination Teaches or Suggests Limitations [1.K] and [1.L] (Bluetooth)

Patent Owner argues that "[a]lthough the Paradigm® REAL-Time documentation and Patel-2009 discuss using radio frequency transmissions, neither discloses using Bluetooth," as recited in claim limitations [1.E] and [1.F]. Prelim. Resp. 37. Patent Owner asserts that "Patel-2009 already contemplates using a non-Bluetooth protocol," namely, "the 916 MHz and 868 MHz frequency bands," and "[t]he Petition does not explain why a

POSITA would be motivated to replace Patel-2009's communication protocol with Bluetooth." *Id.* at 39 (citing Ex. 1012 (Patel-2009) ¶ 82). Patent Owner further argues that Petitioner's own cited evidence "contradicts its alleged motivation to add Bluetooth to the Patel-2009 and Paradigm® combination," including because one of the articles discusses point-to-point systems that did not use Bluetooth, and another article "concludes that Bluetooth is not well-suited for wearable health-monitoring systems." *Id.* at 39–40 (citing, *e.g.*, Ex. 1035 (Armstrong), 2; Ex. 1036 (Pantelopoulos), 2).

On the present record, we find that Petitioner has the better argument. The record demonstrates that "skilled artisans were familiar with implementing Bluetooth communication for short range device-to-device connections in health monitoring applications." Pet. 12 (citing, *e.g.*, Ex. 1008 (Gross Decl.) ¶¶ 47–49, 54). The evidence Petitioner cites adequately supports its argument that "POSITAs would have found it obvious to configure Bluetooth communication links in order to extend the compatibility, operating range, and usability of the system via a standardized, well-established wireless communication protocol." Pet. 40–41 (citing, *e.g.*, Ex. 1008 (Gross Decl.) ¶¶ 56, 61, 100, 103–04); *see also id.* at 12.

Although Patel-2009 references the 916 MHz and 868 MHz frequency bands in particular, it cites these bands only by way of example. *See* Ex. 1012 (Patel-2009) ¶ 82 ("Communication link information may also be exchanged, which may include a communication rate, a frequency (***e.g., 916 Mhz or 868 Mhz***) and configuration options for frequency hopping.") (emphasis added). And even if modes of communication other than

Bluetooth were known and/or Bluetooth had alleged disadvantages, it is "not require[d] that the motivation be the *best* option, only that it be a *suitable* option from which the prior art did not teach away." *PAR Pharm., Inc. v. TWI Pharms., Inc.*, 773 F.3d 1186, 1197–98 (Fed. Cir. 2014). The current record demonstrates at least a reasonable likelihood that Bluetooth was a known, suitable option for the radio frequency transmissions disclosed in Patel-2009 and Paradigm REAL-Time.

4. Conclusion – Ground 1

In sum, after considering the arguments and cited evidence of record, we find for purposes of institution that Petitioner shows a reasonable likelihood of prevailing on Ground 1.

F. Ground 2 – Alleged Obviousness Over Patel-2009, Paradigm REAL-Time, and Causey

For Ground 2, Petitioner asserts that claims 4, 9, 10, 15, 16, and 25 are unpatentable as obvious over Patel-2009, Paradigm REAL-Time, and Causey. Pet. 61–72. Aside from the arguments already discussed above that are also applicable here, Patent Owner does not specifically address this ground. *See* Prelim. Resp. 41.

After considering the arguments and cited evidence of record (including Patent Owner's arguments discussed above in connection with Ground 1), we determine that for purposes of institution, Petitioner sufficiently shows that the combination of Patel-2009, Paradigm REAL-Time, and Causey teaches or suggests each limitation of claims 4, 9, 10, 15, 16, and 25, and that a person of ordinary skill in the art would have had a reason to combine the teachings of Patel-2009, Paradigm REAL-Time, and Causey with a reasonable expectation of success. *See, e.g.*, Pet. 64–72.

Accordingly, on this record, Petitioner shows a reasonable likelihood of prevailing on Ground 2.

G. Ground 3 – Alleged Obviousness Over Patel-2008, Mastrototaro, Shahmirian, and Causey

For Ground 3, Petitioner asserts that claims 1–12, 14–18, 20–28, and 30 are unpatentable as obvious over Patel-2008 and three references allegedly incorporated by reference into Patel-2008, i.e., Mastrototaro, Shahmirian, and Causey. Pet. 72–115. At this stage of the proceeding, Patent Owner disputes Petitioner's contentions that (i) Patel-2008 incorporates by reference the entireties of Mastrototaro, Shahmirian, and Causey; (ii) a person of ordinary skill in the art would have had a reason to combine Patel-2008, Mastrototaro, Shahmirian, and Causey; and (iii) Patel-2008, Mastrototaro, Shahmirian, and Causey disclose claim elements [1.K] and [1.L]. *See* Prelim. Resp. 42–56.

In brief, for independent claim 1, Petitioner relies on the combination of Patel-2008, Mastrototaro, Shahmirian, and Causey as disclosing a continuous glucose monitoring system that teaches or suggests most of the limitations of claim 1. *See generally* Pet. 85–102. For limitation [1.K], which recites that "the receiver unit is configured to output to the display, after the adverse condition is corrected, processed sensor data for the time period corresponding to the adverse condition such that the data gap is backfilled," Petitioner argues that (1) Shahmirian retransmits glucose data not received, and then displays the most recent sensor measurement on the infusion pump display; and (2) Causey "discloses updating display of glucose data to show newly calibrated glucose values and differences with previously displayed data." Pet. 101 (citing Ex. 1023 (Shahmirian) ¶¶ 102,

103, 111; Ex. 1017 (Causey), 15:59–65; Ex. 1008 (Gross Decl.) ¶¶ 214–15). Petitioner argues that "POSITAs would recognize that retransmission or calibration of previously missing glucose data and the display of this data would fill in associated missing data gaps." *Id.* at 102 (citing Ex. 1008 (Gross Decl.) ¶¶ 58–60, 216). Petitioner alternatively argues that, "considering *Shahmirian* and *Causey*'s disclosures, POSITAs would have found it obvious to re-populate glucose data gaps with retransmitted or newly calibrated data following failed communication or calibration." *Id.*

For limitation [1.L], which requires that the processed sensor data referenced in limitation [1.K] comprises a second line graph, Petitioner argues that Patel-2008 "discloses a glucose line graph with a missing data gap," and that "POSITAs would have found it obvious to display missing data on the same graph when retransmitted or newly calibrated." *Id.* (citing Ex. 1015 (Patel-2008) ¶ 57, Fig. 7(a); Ex. 1008 (Gross Decl.) ¶¶ 60, 217–18).

Petitioner argues that "*Patel*-2008 'specifically incorporate[s] by reference' co-pending Application 11/322,568 to Mastrototaro (EX1020) as describing the glucose monitoring device; co-pending Application 10/335,256 to Shahmirian (EX1022) as describing the connector and 'communication solutions;' and *Causey* (EX1017) as describing the CED [consumer electronic device]."[15] Pet. 73–5 (citing, *e.g.*, Ex. 1015 (Patel-

[15] Patel-2008 references the specifications of the Mastrototaro and Shahmirian applications as filed. *See* Ex. 1015 (Patel-2008) ¶¶ 33–35; Ex. 1020 (Mastrototaro application as filed); Ex. 1022 (Shahmirian application as filed). Petitioner asserts that the Mastrototaro and Shahmirian Publications (Exhibits 1019 and 1023, respectively) have "substantively identical disclosures" to the applications as filed (Exhibits 1020 and 1022,

2008) ¶¶ 33–35; Ex. 1008 (Gross Decl.) ¶ 176). As such, Petitioner contends that Mastrototaro, Shahmirian, and Causey are "effectively part of [Patel-2008] as if [they] were explicitly contained therein." Pet. 75 (quoting *Paice LLC v. Ford Motor Co.*, 881 F.3d 894, 906 (Fed. Cir. 2018)). Petitioner alternatively argues that "POSITAs would have been motivated to integrate the glucose sensor and transmitter in *Mastrototaro*, bi-directional communications of *Shahmirian*, and monitoring/display functionalities of *Causey* as expressly incorporated into the diabetes management system of *Patel*-2008," including because each reference describes a Medtronic MiniMed continuous glucose monitoring component that is incorporated into Patel-2008's diabetes management system, and Patel-2008 expressly cites and discusses each of these references. Pet. 83–84 (citing, *e.g.*, Ex. 1008 (Gross Decl.) ¶¶ 56–57, 190–93).

After considering the arguments and cited evidence of record (including Patent Owner's arguments discussed below), we determine that for purposes of institution, Petitioner sufficiently shows that the combination of Patel-2008, Mastrototaro, Shahmirian, and Causey teaches or suggests each limitation of claims 1–12, 14–18, 20–28, and 30, and that a person of ordinary skill in the art would have had a reason to combine the teachings of these references with a reasonable expectation of success. Accordingly, on this record, Petitioner shows a reasonable likelihood of prevailing on Ground 3. Nevertheless, we recognize that the issues in dispute are highly fact-intensive and implicate genuine issues of fact more appropriately

---

respectively), and thus Petitioner cites to the Publications "[f]or convenience." Pet. 75 n.5, 80 n.6. Like Petitioner, we also cite to the Mastrototaro and Shahmirian Publications.

resolved on a fully developed record. At this early stage, we offer the following observations on Patent Owner's arguments.

1. Whether Patel-2008 Incorporates by Reference the Entireties of Mastrototaro, Shahmirian, and Causey

Patent Owner argues that according to Federal Circuit caselaw, "the entireties of Mastrototaro, Shahmirian, and Causey are ***not*** incorporated into Patel-2008." Prelim. Resp. 42. Instead, Patent Owner contends that Patel-2008 uses "narrow and specific incorporation language" that serves only to incorporate certain portions of Mastrototaro, Shahmirian, and Causey into Patel-2008. *Id.* In particular, Patent Owner argues that for Mastrototaro, "Patel-2008 incorporates by reference only 'a glucose transmitter 125 and a subcutaneous glucose sensor 130 of the type described' in" Mastrototaro, "and nothing more." *Id.* at 45. For Shahmirian, Patent Owner argues that "Patel-2008 incorporates by reference only 'connectors … of the type described in' Shahmirian and nothing more." *Id.* For Causey, Patent Owner asserts that "Patel-2008 incorporates by reference only consumer electronic devices (CED) and connectors of the type described in Causey and nothing more." *Id.*

In making the determination of whether and to what extent a patent application incorporates material by reference, "the standard is whether one reasonably skilled in the art would understand the application as describing with sufficient particularity the material to be incorporated." *Harari v. Lee*, 656 F.3d 1331, 1334 (Fed. Cir. 2011). In *Harari*, the relevant incorporation by reference language stated:

> Optimized erase implementations have been disclosed in two copending U.S. patent applications. They are copending U.S. patent applications, Serial No. 204,175, filed June 8, 1988, by

> Dr. Eliyahou Harari and one entitled "Multistate EEprom Read and Write Circuits and Techniques," filed on the same day as the present application, by Sanjay Mehrotra and Dr. Eliyahou Harari. *The disclosures of the two applications are hereby incorporate[d] by reference*. The Flash EEprom cells are erased by applying a pulse of erasing voltage followed by a read to verify if the cells are erased to the "erased" state. If not, further pulsing and verifying are repeated. . . .

Id. at 1335. The patent challenger argued that this "incorporation language when read in context indicates that Harari intended to incorporate only the optimized erase and optimized write implementations as described in the short passage[] following the incorporation language." *Id.*

The Federal Circuit disagreed, finding that the above language "incorporates the entire disclosures of the two applications rather than just the portions describing optimized erase implementations." *Id.* The Court observed that although "the incorporation here occurred during a discussion of the erase implementations," the sentence, "[t]he disclosures of the two applications are hereby incorporate[d] by reference," served to incorporate the entire disclosures of the cited patent applications. *Id.* The Court contrasted this "broad and unequivocal language" with more limiting incorporation language that appeared elsewhere in the patent application. *Id.* That is, where the patent application stated that the "relevant portions of the [cited] disclosures" were incorporated, the Federal Circuit found that such language signaled that "the drafter intended to incorporate only a portion" of the reference. *Id.* at 1335–36.

Here, Patel-2008's incorporation language is similar to *Harari*'s "broad and unequivocal language." *Id.* at 1335. Specifically, as to Mastrototaro, Patel-2008 states: "The glucose monitoring device 120

includes a glucose transmitter 125 and a subcutaneous glucose sensor 130 of the type described [in certain patent applications, including Mastrototaro], all of which are specifically incorporated by reference herein." Ex. 1015 (Patel-2008) ¶ 33. As to Shahmirian, Patel-2008 states: "The connector 110 may be of the type described in [Shahmirian], which is specifically incorporated by reference herein." *Id.* ¶ 35. As to Causey, Patel-2008 states: "The PDA/Smartphone 100 may be selected from any number of devices including the very popular BlackBerry® line of devices manufactured by Research in Motion. . . . Other devices and connectors are of the type described in [Shahmirian and other references], all of which are specifically incorporated by reference herein." *Id.* ¶ 35. Patel-2008 does not use more limiting language, e.g., it does not indicate that only "relevant portions" of these references are incorporated. Accordingly, we find on the present record that Petitioner has established a reasonable likelihood that Patel-2008 incorporates the entireties of Mastrototaro, Shahmirian, and Causey, as opposed to only the limited subject matter Patent Owner identifies.

In any event, we note that even if Patel-2008 incorporates only the specific subject matter Patent Owner identifies (i.e., a glucose transmitter and subcutaneous glucose sensor described in Mastrototaro; a connector described in Shahmirian; and consumer electronic devices and connectors described in Causey, *see* Prelim. Resp. 45), Patent Owner does not assert that Petitioner relies on subject matter that falls outside of the incorporated subject matter. Accordingly, for this additional reason, Patent Owner's argument regarding incorporation by reference is unavailing on the current record.

2. Whether Petitioner Demonstrates an Adequate Reason to Combine Patel-2008, Mastrototaro, Shahmirian, and Causey

Patent Owner argues that Petitioner has not demonstrated a legally sufficient reason to combine the teachings of Patel-2008, Mastrototaro, Shahmirian, and Causey. *See* Prelim. Resp. 47–49. Patent Owner argues that it is not sufficient that "the references came from the same field of study and address the same problem," and that "nothing in Patel-2008 teaches or suggests incorporating these disparate teachings into a single system, as required by the claims." *Id.* at 47–48 (quoting *Comcast Cable Commc'ns, LLC v. Promptu Sys. Corp.*, 838 F. App'x 555, 557 (Fed. Cir. 2021)).

We determine that Petitioner's proffered reason to combine is sufficient for purposes of institution. Petitioner does not merely rely on the fact that Patel-2008, Mastrototaro, Shahmirian, and Causey are from same field of study or address the same problem. Instead, Petitioner points to Patel-2008's express discussion of the utility of Mastrototaro, Shahmirian, and Causey's teachings, together with the fact that all of the references apparently discuss different components of the same system (i.e., the Medtronic MiniMed continuous glucose monitoring system). *See, e.g.*, Pet. 83–84; Ex. 1008 (Gross Decl.) ¶¶ 55, 70–71. On this record, we find for purposes of institution that Dr. Gross sufficiently establishes that "POSITAs would have been motivated to combine the sensor and transmitter of Mastrototaro, the communications of Shahmirian, and the monitor control programs of Causey to effectuate a diabetes management system with the monitoring, communication, and display functionalities disclosed in Patel-2008," and "to convey as much accurate glucose

information to a user as possible without providing inaccurate information." Ex. 1008 (Gross Decl.) ¶¶ 190–93.

Patent Owner's argument that "nothing in Patel-2008 teaches or suggests incorporating these disparate teachings into a single system" (Prelim. Resp. 47–48) is unavailing. First, as noted above, Patel-2008 expressly teaches using in its system components described in Mastrototaro, Shahmirian, and Causey. Second, even if Patent Owner were correct that Patel-2008 lacks a teaching or suggestion to incorporate Mastrototaro, Shahmirian, and Causey's teachings into Patel-2008's system, Patel-2008 itself need not express a reason to combine. Rather, "[a]ny motivation to combine references, whether articulated in the references themselves or supported by evidence of the knowledge of a skilled artisan, is sufficient to combine those references to arrive at the claimed [invention]." *Outdry Techs. Corp. v. Geox S.p.A.*, 859 F.3d 1364, 1370–71 (Fed. Cir. 2017). As noted above, we find that Petitioner's rationales are sufficiently supported by Dr. Gross and the cited references for purposes of institution.

3. Whether the Asserted Combination Teaches or Suggests Limitations [1.K] and [1.L] (Repopulation of Data in a Line Graph in the Receiver Display)

Patent Owner makes several arguments regarding Petitioner's allegations on limitations [1.K] and [1.L]. *See* Prelim. Resp. 49–55. First, as to limitation [1.K], Patent Owner argues that Petitioner combines two statements from separate embodiments in Shahmirian "to create the impression that Shahmirian discloses backfilling data gaps," but "[i]t does not." *Id.* at 51. Patent Owner also argues that "the Petition never argues that a POSITA would modify the different embodiments to meet the claimed

invention, much less articulate[s] any rational underpinning for doing so." *Id.*

We agree with Patent Owner that Shahmirian discloses that "in some embodiments, '[o]nce the sensor data is received, the infusion pump 30 shows the most recent sensor measurement on the display 100.'" *Id.* at 50 (quoting Ex. 1023 (Shahmirian) ¶ 103). We further agree with Patent Owner that Shahmirian also discloses that, "'[i]n particular alternative embodiments,' 'the infusion pump 30 indicates to the BG [blood glucose] monitoring system 20 the most recent sensor data that the infusion pump 30 has received, and in response, the BG monitoring system 20 sends any additional sensor data that the BG monitoring system 20 has that has not been received by the infusion pump 30.'" *Id.* at 50–51 (quoting Ex. 1023 (Shahmirian) ¶ 103).

Patent Owner is correct that these statements describe two alternative embodiments in Shahmirian, but on the current record, we do not agree that it is misleading or inappropriate for Petitioner to combine these two embodiments. There is no dispute that Shahmirian discloses, in one embodiment, displaying the most recent sensor data, and in the other, sending backfilled data (i.e., "additional sensor data that the BG monitoring system 20 has that has not been received by the infusion pump 30") to the infusion pump. Ex. 1023 (Shahmirian) ¶ 10. Shahmirian discusses the two embodiments in the same paragraph, and on this record and in view of the level of skill in the art, "[c]ombining [these] two embodiments disclosed adjacent to each other" to display the backfilled data does not appear to "require a leap of inventiveness." *Boston Sci. Scimed, Inc. v. Cordis Corp.*, 554 F.3d 982, 991 (Fed. Cir. 2009).

Second, as to limitation [1.K], Patent Owner argues that Petitioner fails to explain how the cited excerpt of Causey meets this limitation. Prelim. Resp. 51. The parties are free to develop the record on whether the Petition adequately explains how Causey teaches or suggests limitation [1.K] during trial. For purposes of institution, we find that Petitioner has shown a reasonable likelihood that at least Shahmirian teaches or suggests limitation [1.K].

Third, as to limitation [1.K], Patent Owner disputes Petitioner's argument that "considering *Shahmirian* and *Causey*'s disclosures, POSITAs would have found it obvious to re-populate glucose data gaps with retransmitted or newly calibrated data following failed communication or calibration." Prelim. Resp. 53 (quoting Pet. 102). Patent Owner argues that this argument is conclusory, and that the cited portions of the Gross Declaration (Ex. 1008 ¶¶ 58–60, 216) should not be considered because they are improperly incorporated by reference, and are deficient in any event. Prelim. Resp. 53–54.

Patent Owner's arguments are unavailing. In the sentence prior to the sentence Patent Owner quotes, Petitioner contends that "POSITAs would recognize that retransmission or calibration of previously missing glucose data and the display of this data would fill in associated missing data gaps."[16] Pet. 102. Thus, considering the full context of the paragraph

[16] Patent Owner argues that by use of the term "would recognize" in this sentence, "Petitioner is effectively arguing that claim element [1.K] is inherent in Causey." Prelim. Resp. 52. We disagree. This sentence does not refer to Causey nor do we understand the term "would recognize" as necessarily invoking an inherency argument based on Causey's disclosure.

instead of the sentence Patent Owner quotes in isolation, we understand Petitioner to be alleging that the reason a person of ordinary skill in the art would have wanted to re-populate glucose data gaps with retransmitted or newly calibrated data was to fill in the associated gaps. The cited portions of Dr. Gross's declaration explain that re-populating data gaps permits "the display of accurate glucose concentrations to a user," and "present[s] as much accurate data as possible to assist in diabetes management, insulin dosing decisions, and prevention or treatment of hyper and hypo-glycemia." Ex. 1008 (Gross Decl.) ¶¶ 58, 60. We find this explanation sufficient for purposes of institution.

Additionally, on the current record, we do not find that the additional explanation provided by Dr. Gross is extensive or unsupported in the Petition, and we find that it is appropriate opinion testimony based on his experience. Thus, at this stage, we do not consider it to be improperly incorporated by reference.

Nor do we find Dr. Gross's opinion "deficient" or "evidence-free." Prelim. Resp. 54. Dr. Gross cites various references, which on this record, indicate that as of the priority date, one aim of continuous glucose monitoring systems was in fact to provide users with "as much accurate data as possible to assist in diabetes management, insulin dosing decisions, and prevention or treatment of hyper and hypo-glycemia." Ex. 1008 (Gross Decl.) ¶ 60. For example, Paradigm REAL-Time indicates that the system "displays on-screen REAL-Time data to help you understand more about your glucose control;" provides glucose trend graphs and sounds alarms to alert to dangerously low or high blood sugar levels; and permits "view[ing] up to 31 days of your personal history on your insulin pump screen," all of

which is designed to "help you take action sooner to improve your glucose control." Ex. 1011 (Paradigm REAL-Time), 15, 23, 26. Accordingly, on the present record we find that Dr. Gross's opinion is supported by citation to objective evidence.

Finally, regarding limitation [1.L], Patent Owner argues that Petitioner's statement that "POSITAs would have found it obvious to display the missing data on the same graph when retransmitted or newly calibrated" is conclusory, and Petitioner's supporting citation of paragraphs 60 and 218 of the Gross Declaration should be disregarded because the arguments in those paragraphs are improperly incorporated by reference. Prelim. Resp. 55 (quoting Pet. 102). For the same reasons discussed above with respect to limitation [1.K], we find that Petitioner's argument that a person of ordinary skill in the art would have found it obvious to display missing data is adequately supported on this record for purposes of institution, and that Dr. Gross's additional explanation is not improperly incorporated by reference.

4. Conclusion – Ground 3

In sum, after considering the arguments and cited evidence of record, we find for purposes of institution that Petitioner shows a reasonable likelihood of prevailing on Ground 3.

III. CONCLUSION

For the foregoing reasons, we determine that the information presented establishes a reasonable likelihood that Petitioner would prevail in showing that at least one of the challenged claims of the '056 patent is unpatentable.

At this preliminary stage, we have not made a final determination regarding the patentability of any challenged claim or any underlying factual and legal issues. *See TriVascular, Inc. v. Samuels*, 812 F.3d 1056, 1068 (Fed. Cir. 2016) (noting that "there is a significant difference between a petitioner's burden to establish a 'reasonable likelihood of success' at institution, and actually proving invalidity by a preponderance of the evidence at trial"). Any final decision in this proceeding will be based on the full trial record.

The Board will deem forfeited any issue not raised by Patent Owner in a timely response to the Petition, or as permitted in another manner during trial, even if asserted in the Preliminary Response or discussed in this Decision.

Nothing in this Decision authorizes Petitioner, in a manner not otherwise permitted by the Board's rules, to supplement the information pertaining to any ground advanced in the Petition.

IV. ORDER

In consideration of the foregoing, it is hereby:

ORDERED that, pursuant to 35 U.S.C. § 314(a), an *inter partes* review is instituted based on all grounds asserted in the Petition; and

FURTHER ORDERED that, pursuant to 35 U.S.C. § 314(c) and 37 C.F.R. § 42.4, notice is hereby given of the institution of a trial commencing on the entry date of this Decision.

For PETITIONER:

John D. Vandenberg
Andrew M. Mason
Amy Haspel
Tucker Mottl
KLARQUIST SPARKMAN, LLP
john.vandenberg@klarquist.com
andrew.mason@klarquist.com
amy.haspel@klarquist.com
tucker.mottl@klarquist.com

For PATENT OWNER:

Peter J. McAndrews
Leland G. Hansen
David Z. Petty
Michael J. Carrozza
MCANDREWS, HELD & MALLOY, LTD.
pmcandrews@mcandrews-ip.com
lhansen@mcandrews-ip.com
dpetty@mcandrews-ip.com
mcarrozza@mcandrews-ip.com