US008881332B2

(12) **United States Patent**
Noble et al.

(10) **Patent No.: US 8,881,332 B2**
(45) **Date of Patent: Nov. 11, 2014**

(54) **TOOTHBRUSH SYSTEM UTILIZING ORAL CARE CAPSULE**

(76) Inventors: **Lise W. Noble**, Chapel Hill, NC (US); **Patrick T. Noble**, Chapel Hill, NC (US)

(*) Notice: Subject to any disclaimer, the term of this patent is extended or adjusted under 35 U.S.C. 154(b) by 1344 days.

(21) Appl. No.: **12/101,446**

(22) Filed: **Apr. 11, 2008**

(65) **Prior Publication Data**

US 2009/0044356 A1 Feb. 19, 2009

Related U.S. Application Data

(63) Continuation-in-part of application No. 11/840,627, filed on Aug. 17, 2007, now abandoned.

(51) **Int. Cl.**

A47L 13/22	(2006.01)
A45B 11/00	(2006.01)
A46B 15/00	(2006.01)
A46B 9/02	(2006.01)
A46B 11/00	(2006.01)
A46B 17/06	(2006.01)

(52) **U.S. Cl.**

CPC ***A46B 15/0002*** (2013.01); ***A46B 9/025*** (2013.01); ***A46B 11/0003*** (2013.01); ***A46B 11/0006*** (2013.01); ***A46B 11/0068*** (2013.01); ***A46B 15/0008*** (2013.01); ***A46B 15/0036*** (2013.01); ***A46B 17/06*** (2013.01); *A46B 2200/1066* (2013.01)

USPC **15/167.1**; 401/268

(58) **Field of Classification Search**

USPC 15/167.1; 132/321; 401/268

IPC A46B 11/00,11/04; A47L 13/22

See application file for complete search history.

(56) **References Cited**

U.S. PATENT DOCUMENTS

1,411,681	A	4/1922	Burlew
2,004,957	A	6/1935	Messner
2,778,045	A	1/1957	Bly et al.
3,991,776	A	11/1976	Duffy
4,253,212	A	3/1981	Fujita
4,427,116	A	1/1984	Brown
5,178,878	A	1/1993	Wehling et al.
5,195,659	A	3/1993	Eiskant
5,864,288	A	1/1999	Hogan
5,894,926	A	4/1999	Stafford
5,960,801	A	10/1999	Vermooten et al.
6,027,273	A	2/2000	Li

(Continued)

FOREIGN PATENT DOCUMENTS

WO 0226078 A2 4/2002

Primary Examiner — Monica Carter
Assistant Examiner — Stephanie Berry
(74) *Attorney, Agent, or Firm* — Withrow & Terranova, P.L.L.C.; Vincent K. Gustafson

(57) **ABSTRACT**

A toothbrush includes a brush head having a capsule receiving zone sized to receive an dentrifice capsule, and a plurality of angled bristles adapted to retain the capsule in such zone. Loading of such toothbrush with a capsule may be performed with a dispenser including a toothbrush manipulation element adapted to move a retention structure associated with the brush head, and dispensation element adapted to deliver the capsule into the receiving zone. Such dispenser may include a desiccant material disposed to receive moisture from a capsule storage container. A dispenser may further include a plurality of toothbrush insertion apertures each adapted to receive a portion of a different toothbrush, so as to enable multiple users each having different toothbrushes to use the same dispenser without requiring contact between multiple brushes and single capsule interface surface of the dispenser.

18 Claims, 11 Drawing Sheets

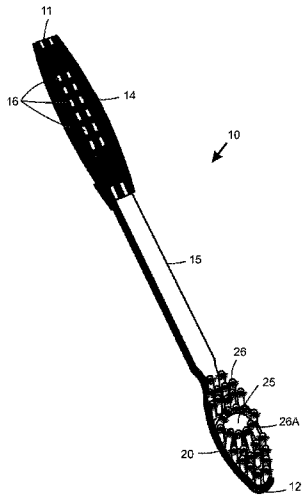

(56) **References Cited**

U.S. PATENT DOCUMENTS

6,106,294	A	8/2000	Daniel	
6,154,912	A	12/2000	Li	
6,524,023	B2	2/2003	Andersen	
6,845,883	B2	1/2005	Pieri	
6,988,638	B2	1/2006	Zak	
7,074,390	B2	7/2006	MacKinnon	
7,575,387	B2	8/2009	Atkin	
2005/0260141	A1	11/2005	Alexander	
2006/0057078	A1	3/2006	Rau	
2006/0115435	A1	6/2006	Wilkens	
2006/0165473	A1 *	7/2006	Hohlbein	401/132
2006/0245814	A1	11/2006	Papa et al.	
2007/0075100	A1	4/2007	Colman et al.	
2007/0254260	A1 *	11/2007	Alden et al.	433/85
2008/0008728	A1	1/2008	Atkin	
2008/0014010	A1 *	1/2008	Bartschi et al.	401/146
2008/0120798	A1 *	5/2008	Sorrentino et al.	15/106

* cited by examiner

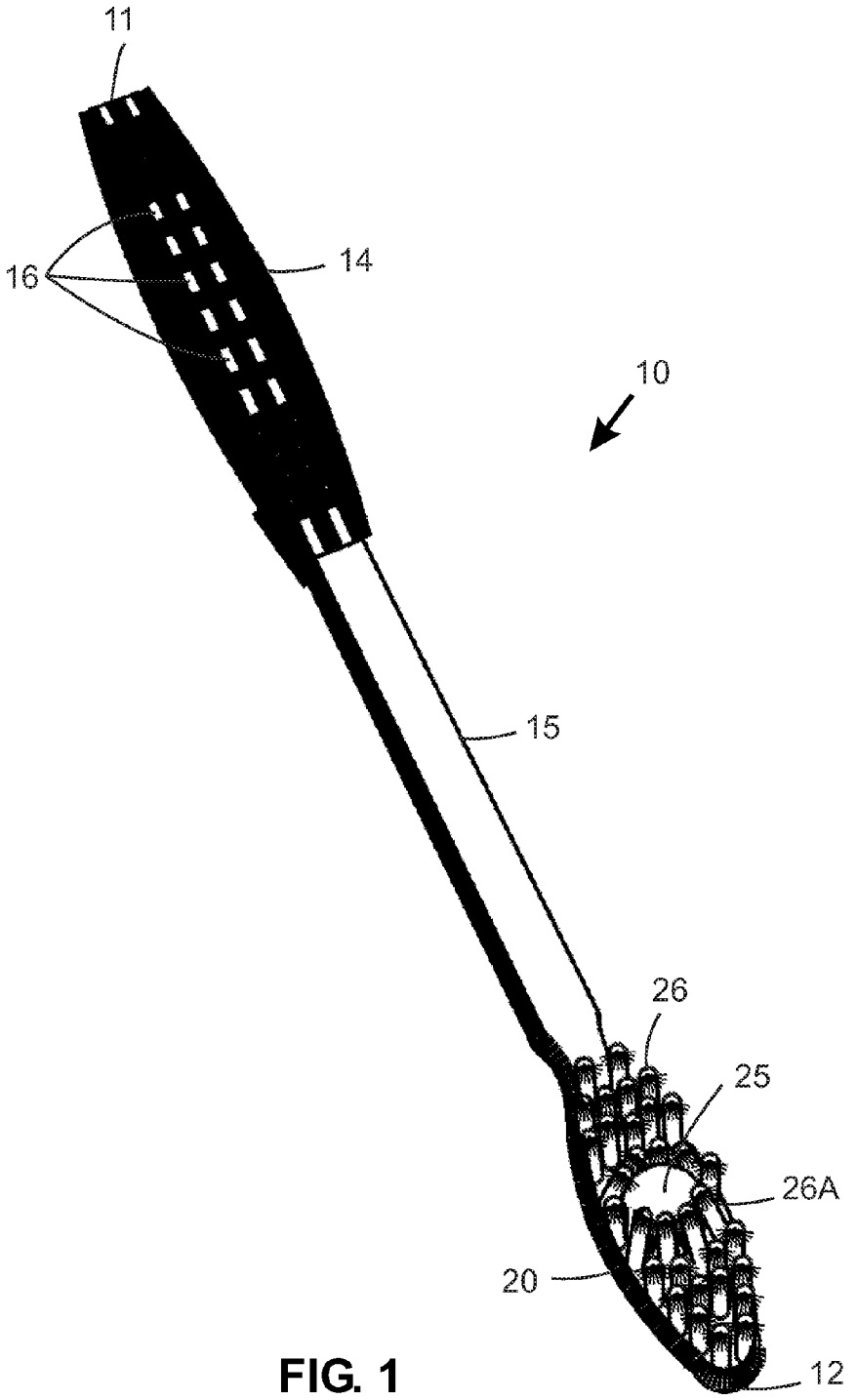

FIG. 1

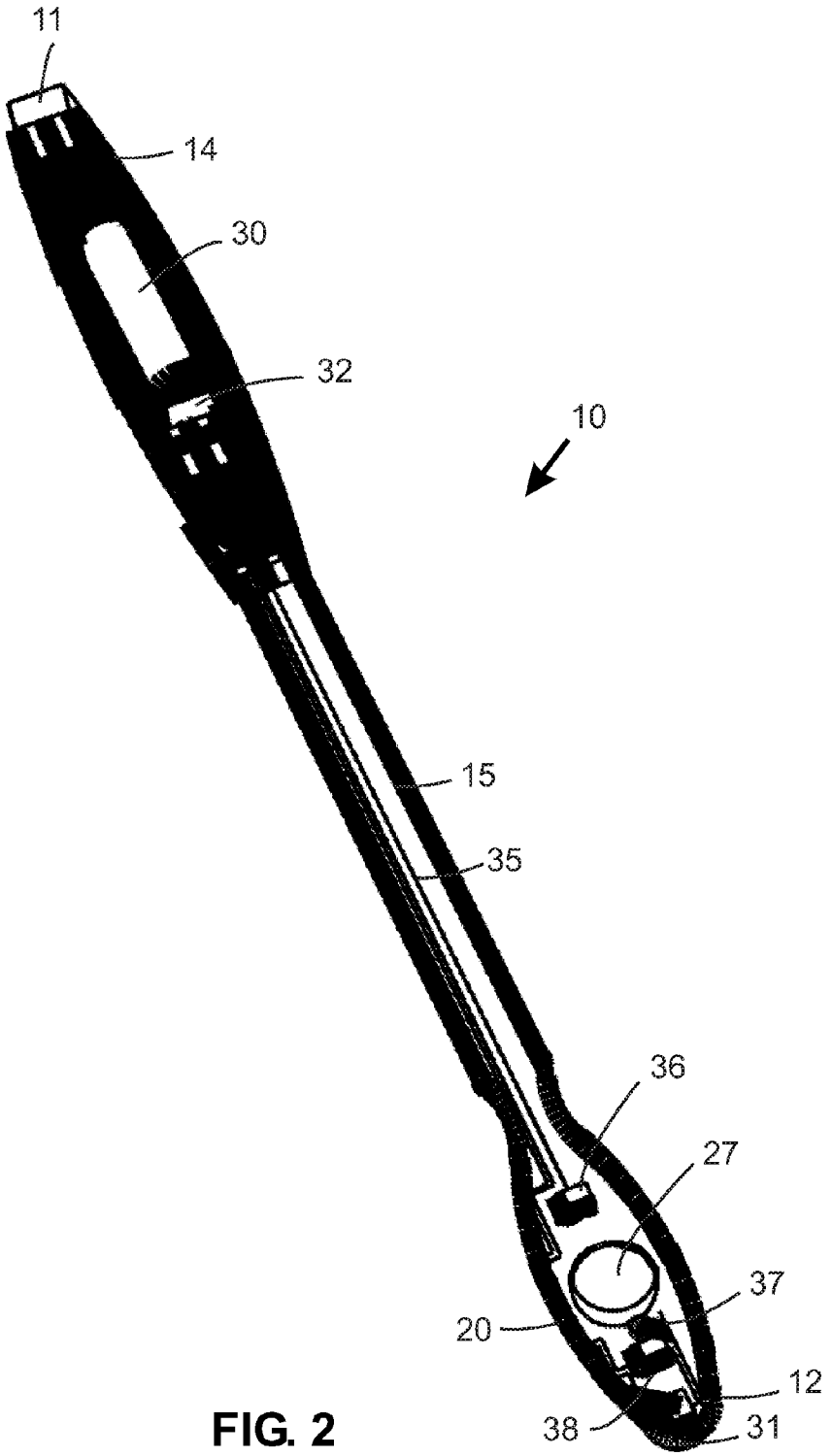

FIG. 2

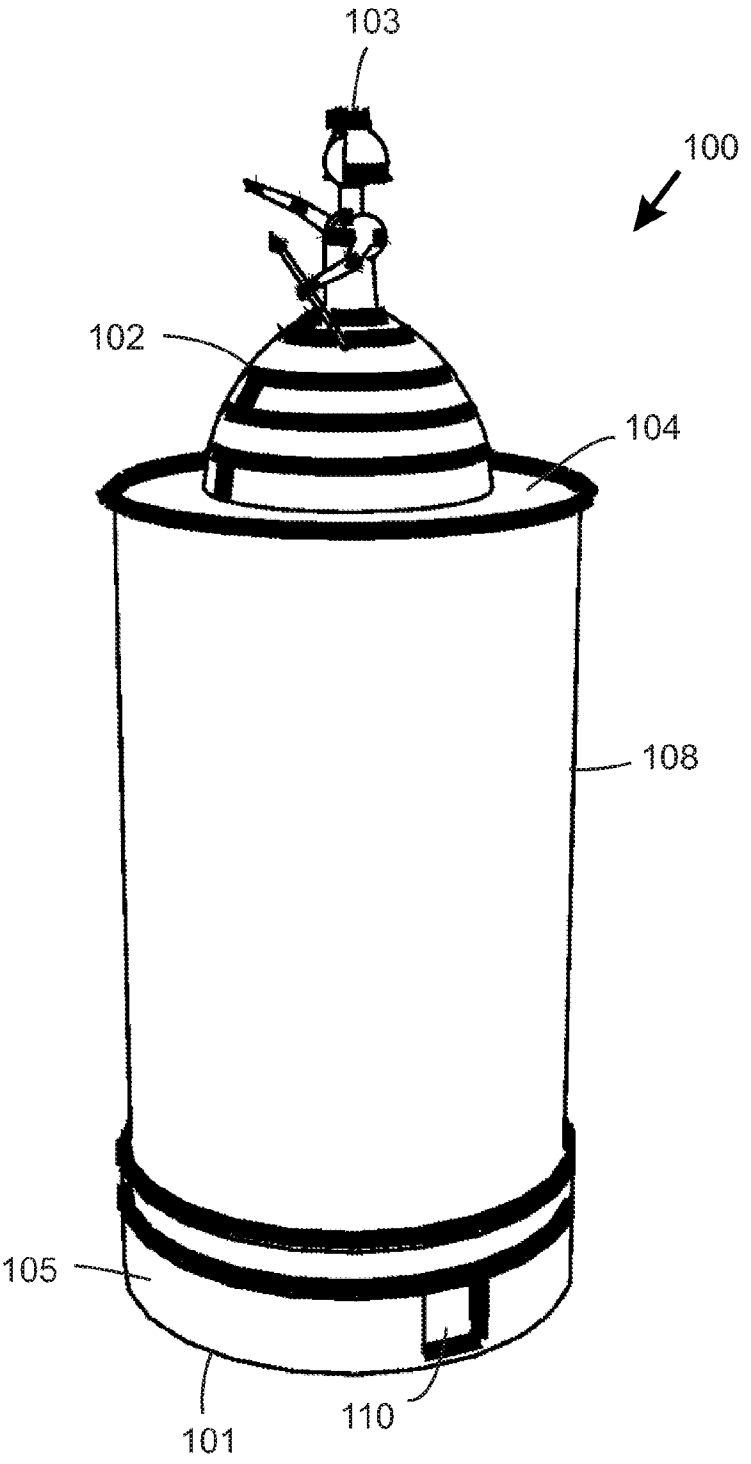

FIG. 3

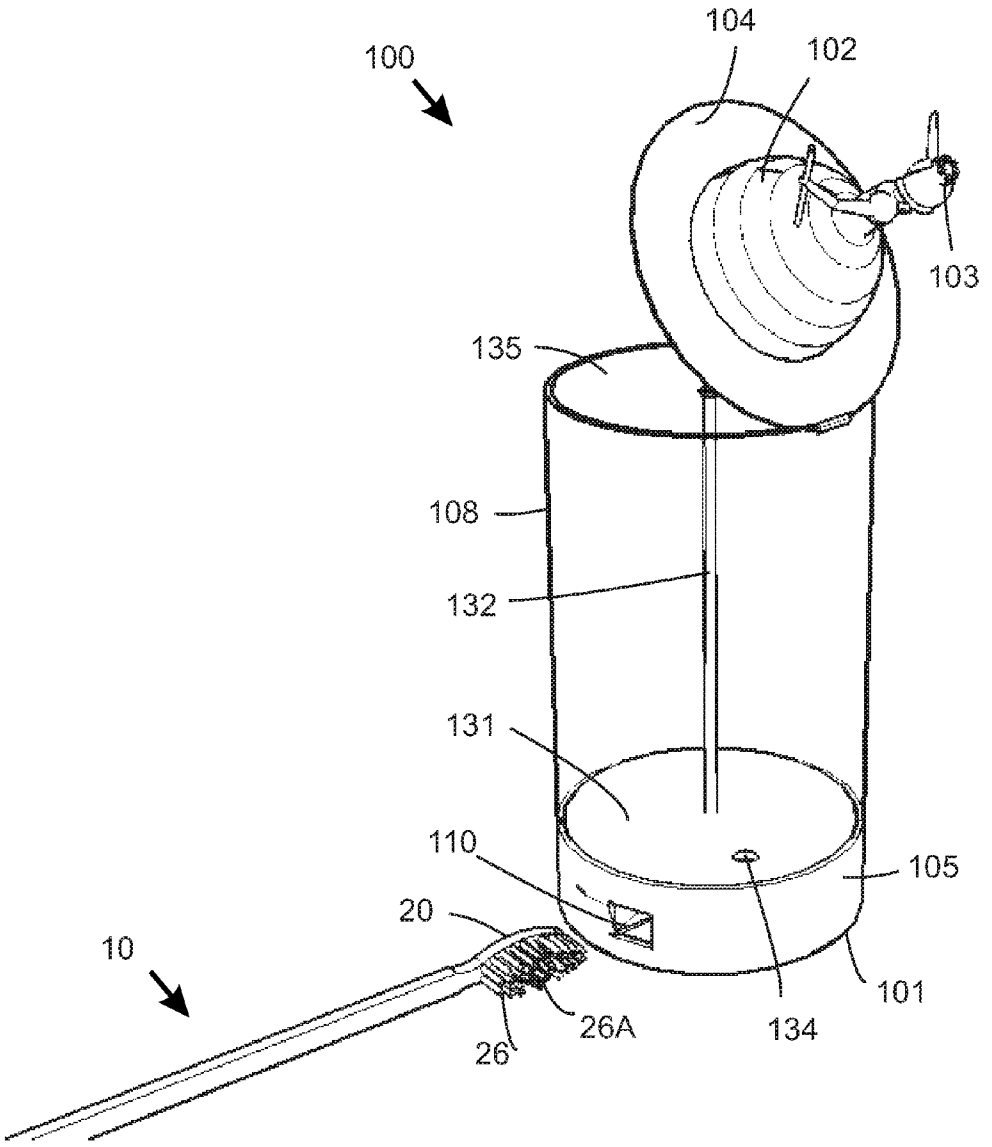

FIG. 4

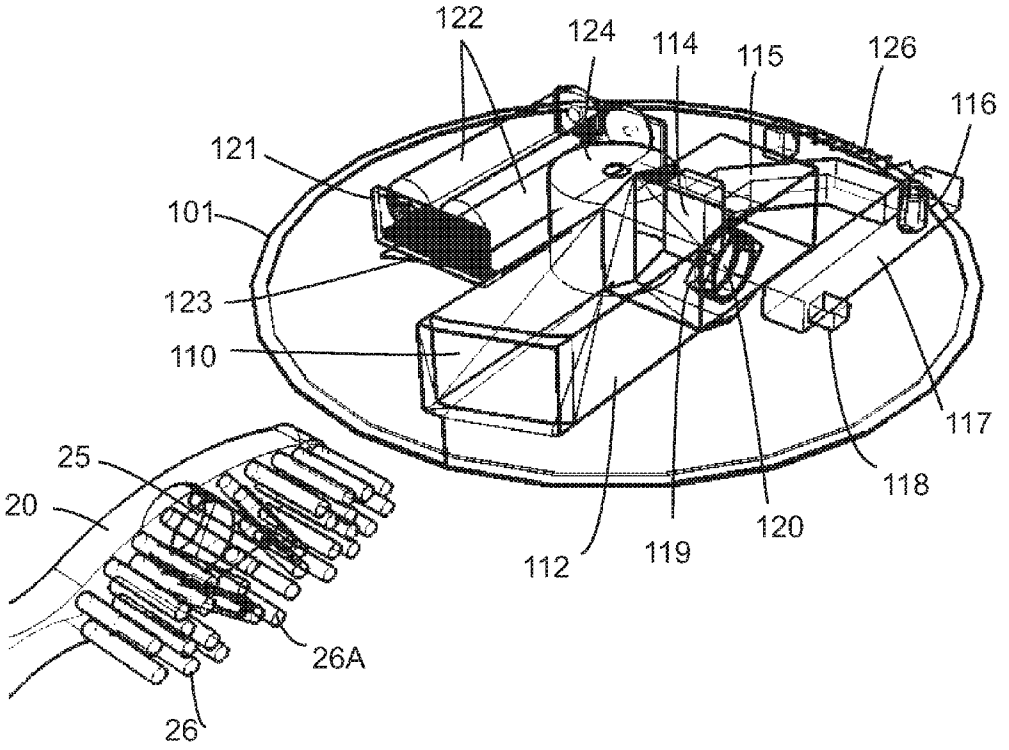
122
124
114
115
126
116
121
101
123
110
117
118
120
119
112
25
20
26A
26

FIG. 5

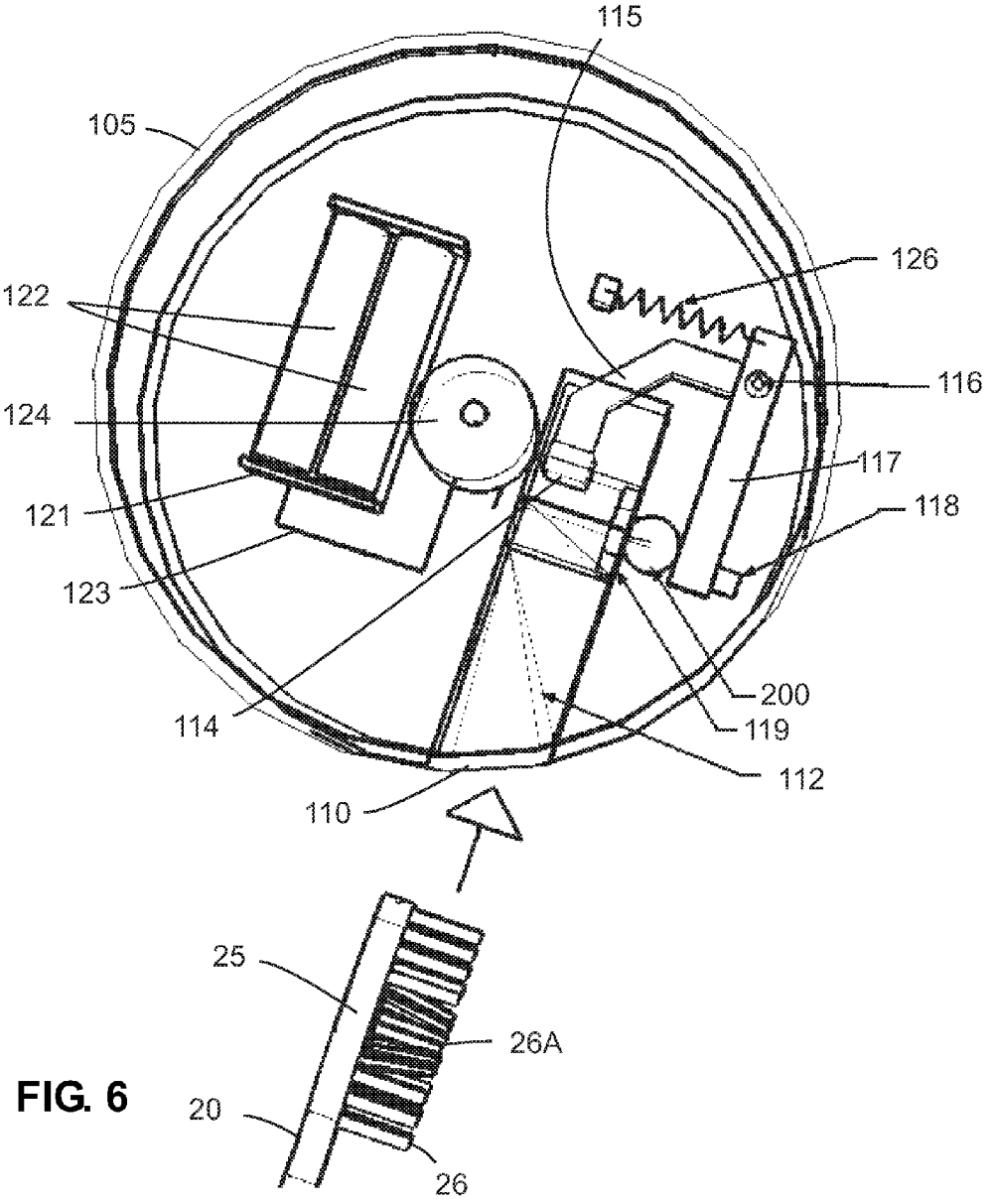
115
105
126
122
116
124
117
121
118
123
200
114
119
112
110
25
26A
20
26

FIG. 6

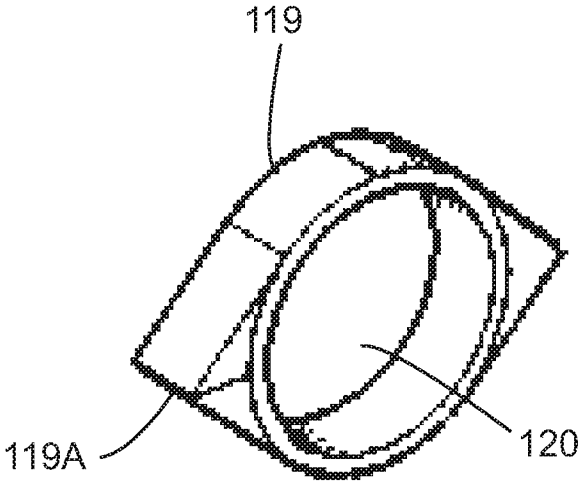

FIG. 7

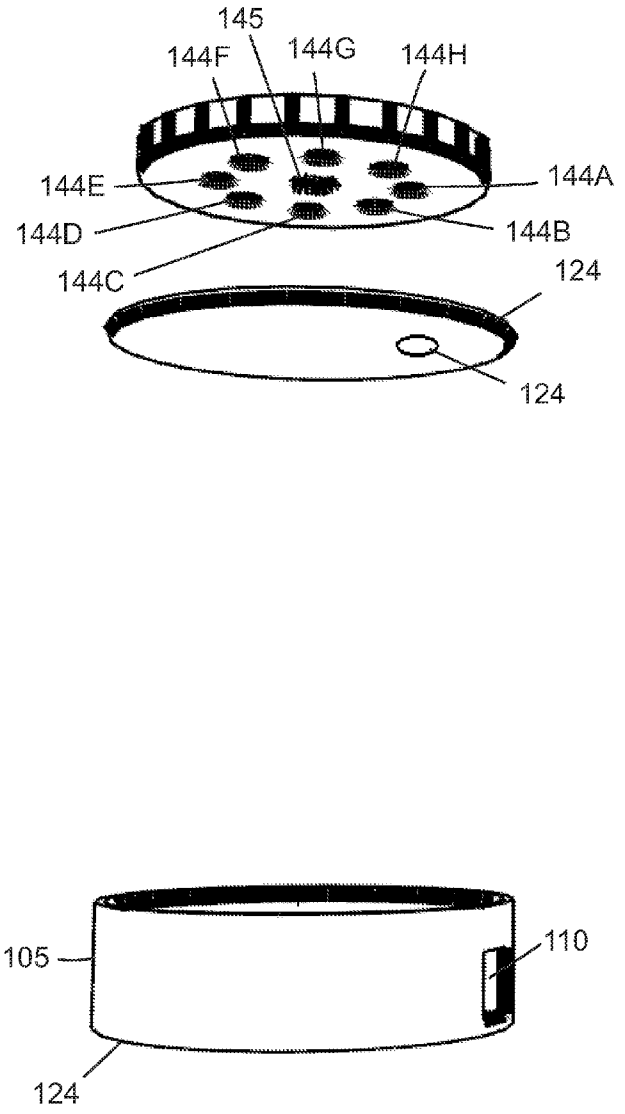
145
144F
144G
144H
144E
144A
144D
144B
144C
124
124
105
110
124

FIG. 8

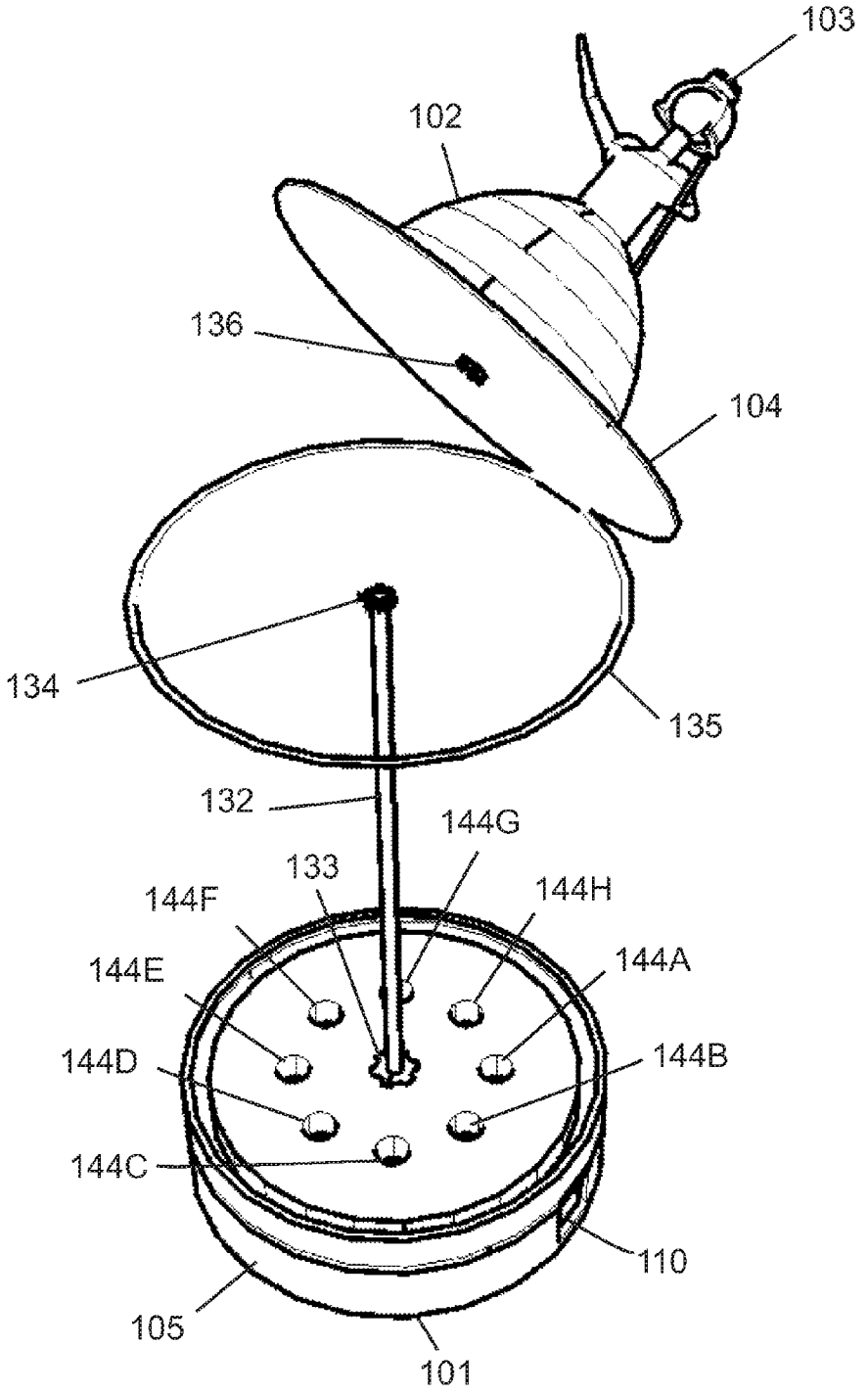
103
102
136
104
134
135
132
144G
133
144F
144H
144E
144A
144D
144B
144C
110
105
101

FIG. 9

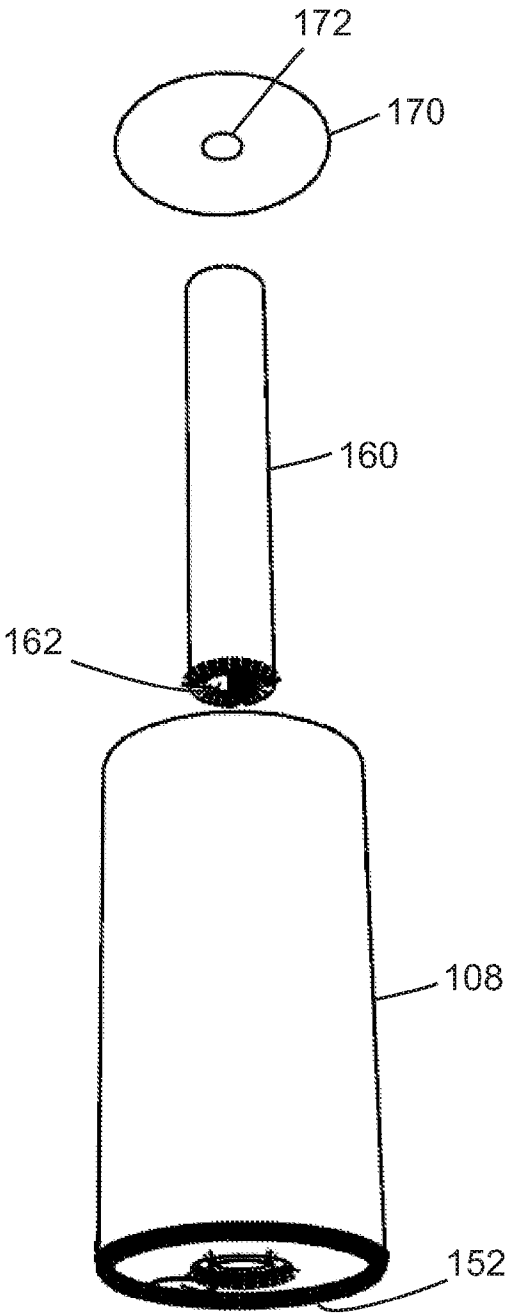

FIG. 10

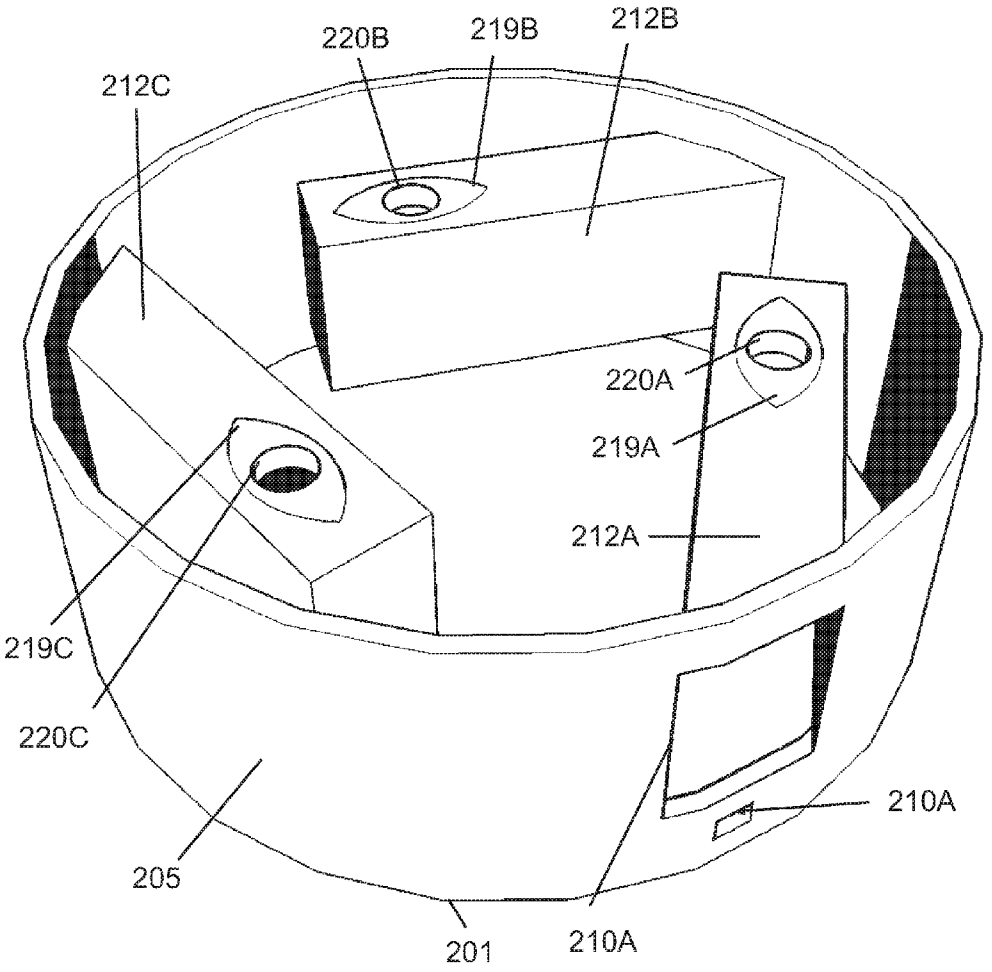
220B
219B
212B
212C
220A
219A
212A
219C
220C
210A
205
201
210A

FIG. 11

TOOTHBRUSH SYSTEM UTILIZING ORAL CARE CAPSULE

STATEMENT OF RELATED APPLICATION(S)

This application is a continuation-in-part of U.S. patent application Ser. No. 11/840,627 filed on Aug. 17, 2007, now abandoned. Benefit of the filing date of such prior application is claimed under 35 U.S.C. §120, and the disclosure of such prior application is hereby incorporated by reference as if set forth fully herein.

FIELD OF THE INVENTION

The present invention relates to oral care, and more specifically, to toothbrushes and dispensing systems utilizing oral care capsules.

DESCRIPTION OF THE RELATED ART

Good oral hygiene requires regular and proper attention to tooth brushing and flossing. According to the American Academy of Periodontology, chronic gingivitis (causing gum tissue to swell, turn red, and bleed easily) is common in children, but can be prevented and treated with a regular routine of brushing, flossing and professional dental care. Absent treatment, chronic gingivitis can lead to more serious forms of periodontal disease.

Proper oral care habits can be difficult to instill in young children. Common challenges for caregivers of children include motivating children to initiate oral hygiene tasks, and to execute such tasks properly without assistance.

Even if motivation barriers are overcome, children often have difficulty in using conventional oral hygiene products and performing conventional oral hygiene methods. For example, many young children have difficulty in manipulating a toothbrush and toothpaste tube in separate hands and dispensing a proper amount from such a tube to the toothbrush. Avoiding generation of messes due to transfer of toothpaste to skin, clothing, and other surfaces during or after such dispensation may also be difficult for young children at a stage of physiological development where muscle control and general coordination are limited. Thereafter, children desiring to engage in other activities may be inclined to rush the task of brushing teeth without devoting the recommended time of two minutes or more to the task.

Conventional toothpaste dispensing systems further provide opportunities for not only growth of pathogens such as bacteria and virus, but also transfer of such pathogens from one toothbrush (or user) to another.

Oral care capsules, which avoid some of the mess associated with conventional toothpaste, are known. Examples of various oral care capsules are disclosed in U.S. Patent Application Publication No. 2005/0260141 to Alexander (hereinafter "Alexander"), U.S. Pat. No. 7,074,390 to MacKinnon (hereinafter "MacKinnon"), and U.S. Pat. No. 4,427,116 to Brown (hereinafter "Brown"), each of which is hereby incorporated by reference. Alexander discloses formation of variously shaped discrete toothpaste beads each having a dry exterior formed by locally applied processes such as heating, drying, extrusion, dusting, molding, varnishing, and coating. One or more beads are selected for use, removed from the container or dispenser, and broken open either by finger pressure, by pressing the bead against a brush or the user's teeth, or it may be bitten; after the internally stored as toothpaste is released into the mouth, a conventional toothbrush is used in the normal manner. (Alexander, ¶0081.) MacKinnon discloses formation of a dentrifice or toothpaste capsule, (optionally including miswak fibers) having a shell of choline, albumin, or gelatin. In use, a capsule according to MacKinnon is put into the user's mouth, the coating is broken with the teeth, and the toothpaste released thereby is distributed throughout the mouth using the tongue or a toothbrush. (MacKinnon, col. 2.) Brown discloses a capsule including a predetermined amount of toothpaste that is encapsulated with a covering (e.g., gelatin) that is preferably water-soluble and breakable when bitten or chewed. (Brown, col. 2). Thus, each of the preceding references require manual manipulation of an oral care capsule by the user.

Furthermore, each of the preceding references rely upon insertion of a capsule into the user's mouth, and such capsules may not be desirable appropriate for use by small children. A very young user may liken a dentrifice capsule to candy, and inclined to swallow it rather than use it in combination with a brush. If a capsule is very small in size, then multiple capsules may be required to deliver an appropriate amount of toothpaste to the user, and opportunities may abound for inconsistent application or waste. Alternatively, if a large capsule is too large in size, then it may pose a choking hazard for a young user.

Moreover, ensuring that the shell or coating of an oral care capsule is easily dissolved in the mouth of a user may limit the ability to practically store multiple capsules in a typical high-moisture bathroom environment. That is, if capsules are stored in a tightly sealed container to prevent moisture infiltration that may degrade a dissolvable coating, such container may be unsuitable for use by a small child. Alternatively, if capsules are stored in a less well-sealed container suitable for manipulation by a small child, moisture infiltration may degrade water-dissolvable capsule coating materials that may lead to spoilage of stored capsules.

Different users having dedicated toothbrushes may store and use such toothbrushes in a single bathroom. Contact between toothbrushes for different users should be minimized to prevent spread of pathogens from one user to another. If an oral care capsule is subject to use with a toothbrush, it would be desirable to avoid contact between toothbrushes for different users and an interface for an oral care capsule.

Thus, it would be desirable to provide toothbrushes and dentrifice dispensing systems that motivate children to initiate and perform oral care tasks properly, while minimizing dangers to such users, minimizing mess creation, reducing opportunities for pathogen growth, promoting consistent dentrifice dispensing, and promoting reliable dentrifice storage.

SUMMARY OF THE INVENTION

The present invention relates to toothbrushes and oral care (dentrifice) capsules, and methods of dispensing and using same, that are suitable for use by small children, and that overcome various limitations associated with such capsules.

In one aspect, the invention relates to a toothbrush comprising a brush head having a capsule receiving zone sized to receive an oral care capsule, and having a plurality of angled bristles adapted to retain an oral care capsule in the capsule receiving zone.

In another aspect, the invention relates to a dispensing device adapted for use with a toothbrush including a brush head (i) having a capsule receiving zone sized to receive an oral care capsule, and (ii) having a plurality of angled bristles adapted to retain an oral care capsule in the capsule receiving zone, the dispensing device comprising: a toothbrush

manipulation element adapted to move a retention structure associated with the brush head to enable receipt of said oral care capsule; and a dispensation element adapted to deliver said oral care capsule into the capsule receiving zone.

In a further aspect, the invention relates to an oral care capsule dispensing device, comprising: a container having an interior adapted to contain a plurality of oral care capsules; a desiccant material disposed to receive moisture from the interior; and a selectively closable dispensing orifice adapted to permit dispensation of at least one oral care capsule from the container.

In a further aspect, any of the foregoing aspects may be combined for additional advantage.

Other aspects, features and embodiments of the invention will be more fully apparent from the ensuing disclosure and appended claims.

BRIEF DESCRIPTION OF THE DRAWINGS

FIG. **1** is a perspective upper view of a toothbrush according to one embodiment of the present invention, the toothbrush having angled bristles adapted to receive and retain an oral care capsule for use in cleansing teeth and gums of a user.

FIG. **2** is a perspective upper view of an internal portion of the toothbrush of FIG. **1** according to one embodiment of the present invention.

FIG. **3** is a perspective side view of the exterior of a dispenser for oral care capsules according to one embodiment of the present invention, the dispenser being adapted for use with the toothbrush of FIGS. **1-2**.

FIG. **4** is a perspective view of the toothbrush of FIGS. **1-2** positioned for insertion into a side aperture of the dispenser of FIG. **3** to permit the toothbrush to receive an oral care capsule.

FIG. **5** is a side perspective view of a first internal loading portion of the dispenser of FIGS. **3-4** having an integral bristle spreader, and a portion of the toothbrush of FIGS. **1**, **2**, and **4** positioned for insertion into a side aperture of the dispenser portion.

FIG. **6** is a top perspective view of the dispenser portion and the toothbrush portion of FIG. **5**.

FIG. **7** is a perspective view of the bristle spreader of the dispenser portion of FIGS. **5-6**.

FIG. **8** is a side perspective assembly view of a second dispensing portion of the dispenser of FIG. **3** and the first loading portion of FIG. **5**, with the second dispensing portion including a rotatable distribution plate having multiple apertures adapted to receive oral care capsules, and a dispensation plate adapted to permit passage of a single capsule from the distribution plate to the first loading portion.

FIG. **9** is an upper perspective view of the assembled first and second dispenser portions of FIG. **8**, coupled to a vertically protruding shaft affixed to a container cover having a hinged decorative lid.

FIG. **10** is a side perspective assembly view of a third portion of the dispenser of FIG. **3**, including a cylindrical container adapted to store multiple oral care capsules, and a desiccant element insertable into the container.

FIG. **11** is a perspective view of a base portion of an oral care capsule dispenser including multiple toothbrush insertion apertures and guide tubes, each adapted to receive a toothbrush of a different user.

DETAILED DESCRIPTION OF THE INVENTION, AND PREFERRED EMBODIMENTS THEREOF

The present invention relates to a toothbrush adapted to receive and retain an oral care capsule, and to a dispensing device adapted supply at least one oral care capsule to such a toothbrush.

As indicated previously, various types of oral care or dentrifice capsules, and methods of making same, are known. At least an exterior portion of each capsule includes a solid material, such as gelatin, that is dissolvable in water and/or saliva (e.g., in the mouth of a user). Use of such dentrifice capsules provides multiple advantages over conventional flowable toothpastes subject to dispensation by displacement from a flexible tube. A measured and reproducible quantity of dentrifice is included in each capsule. Potential for transfer of paste material to undesired surface following dispensation but prior to use is substantially eliminated. A capsule or portion thereof may include a dissolution time profile that may be used as a guide for desirable brushing duration.

A preferred capsule is spherical or spheroidal (approximately spherical) in shape, to provide volumetric efficiency and substantially uniform dissolution of at least an exterior portion thereof. The composition of a capsule can be varied with respect to radius, to provide any one or more of various functions. For example, an outer or near-outer layer may comprise an effervescent layer with micro-abrasives to assist in cleaning the teeth and gums. Various effervescent materials and related additives suitable for oral use and/or ingestion, and methods for making same, are disclosed in U.S. Pat. No. 5,178,878, No. 4,753,792, and No. 3,962,417, which are hereby incorporated by reference. A plaque colorant layer may be provided to render plaque formed on teeth immediately visible to the naked eye of the user. A pH lowering layer may be provided to lower the pH environment in the user's mouth, as has been recently determined to promote absorption of fluoride into the user's teeth due to the lowered pH environment. (See, e.g., T. Kalili, et al., "Fluoride Absorption by Enamel from Toothpaste in Lowered pH Environment," J. Dent. Res. 83 (Spec Iss A) Abstract #4033 (2004).) Such pH lowering layer may be time-released to maintain pH at a target value for a desired period of time. One or more neutralizing and/or decolorant agents may be provided to neutralize pH and/or attenuate or remote the plaque colorant material, such as to avoid lasting effect of the plaque colorant. An oral care tablet with a plaque color indicators and decolorizing agent is disclosed in U.S. Patent Application Publication No. 2006/0115435, which is hereby incorporated by reference. One or more flavoring layers may be provided. A dentrifice layer (e.g., in solid, gel, or paste form), including abrasive materials such as silica may be further provided within the capsule. Further possible layers include a whitening layer (e.g., containing a peroxide), an anticalculus (anti-tartar) layer, a whitening layer (e.g. including a peroxide material), an antibacterial layer (e.g., including triclosan), and a breath freshening layer. Any two or more of the foregoing layers may overlap or be combined as desirable for simultaneous effect, or may be separated (e.g., by an intermediate gel layer) as desirable or necessary, and any combination of the foregoing layers may be provided in a single capsule. In terms of external appearance, capsules may be provided in various colors or patters, and may further be printed with words or pictures such as corresponding to media characters.

A toothbrush **10** adapted to receive and retain an oral care capsule is illustrated in FIGS. **1-2**. The toothbrush **10** includes a handle **14** disposed along a first end **11** optionally including a dial or switch **33**, an intermediate shaft **15**, and a brush head **20** disposed along a second end **12** optionally having an activation element **31**. The brush head **20** includes a capsule receiving zone **25**, such as may include a recess defined in the brush head **20**, disposed within a plurality of angled bristles **26**A. The angled bristles **26**A are preferably canted away from vertical in a direction toward the center of the capsule receiving zone **25**, so as to retain an oral care capsule (not

shown) insertable into the capsule receiving zone **25**. The size and shape of the capsule receiving zone **25**, and the size, spacing, and angle of the angled bristles **26**A, are selected to retain an oral care capsule of a predetermined size and shape. As shown in FIGS. **1**, **4**, and **5**, ten angled bristles **26**A are equally spaced around the perimeter of a circular recess (spanning 360 degrees) defining the capsule receiving zone **25**. Conventional straight bristles **26** may be further provided apart from the capsule receiving zone **25**.

In the present embodiment, an oral care capsule is loaded into the toothbrush **10** by spreading the angled bristles **26**A apart, and then inserting the capsule past the spread bristles into the oral care capsule receiving zone. In another embodiment to be described in more detail hereinafter, a toothbrush may include a moveable retaining element bounding a capsule receiving zone (e.g., from behind) and permitting an oral care capsule to be loaded without spreading apart bristles of the toothbrush.

One or more signaling elements **16** adapted to provide a user-perceptible signal may be disposed in or along the toothbrush handle **14**. Such signal may be any of visible, auditory, and vibratory in nature. The one or more signaling elements **16** may provide a signal indicative of any of oral care cleansing cycle time and attainment of a threshold oral care cleansing cycle time, to ensure that the user engages in an oral cleansing operation of an optimally effective duration (e.g., two minutes or more). A threshold oral care cleansing time may be set or adjusted by the user with an input element, such as the switch **33** or a separate interface element adapted to communicate with the toothbrush **10** for programming.

The handle **14** preferably includes a battery **30** or other charge storage element. The brush head **20** may include various signalling elements **36**, **37**, such as LEDs, sound generators, and/or vibration generators. One or more sensors **38** may be further provided to sense one or more conditions indicative of usage of said toothbrush **10** in an oral care cleansing cycle. For example, the one or more sensors **38** may sense any of motion, acceleration, vibration, and pressure. Signals generated by the one or more sensors **38** may be used, for example, in conjunction with a timer to determine time elapsed in an oral care cleaning cycle, or whether a minimum threshold oral care cleansing cycle has been satisfied. Alternatively, the activation element **31** may be depressed or otherwise activated at the beginning of an oral care cleansing cycle, and used to initiate a time for determining time elapsed in an oral care cleansing cycle or whether a minimum threshold time has been satisfied.

Circuitry **32** adapted to perform any of various desirable functions disclosed herein may be disposed in the handle **14**. For example, the circuitry **32** may control signalling elements **16**, **36**, provide timer functionality, store or allow adjustment of a threshold oral care cleansing cycle time, and the like. One or more conductors **35** may be disposed between the handle **14** and the brush head **20** to permit electrical communication between the battery **30** and/or circuitry **32** disposed in the handle **14**, and the various electrically operable elements (e.g., signalling elements **36**, **37**, sensor **38**, activation element **31**) disposed in the brush head **20**. In a preferred embodiment, the brush head **20** comprises a substantially optically transmissive material, such as to enable external transmission of light from one or more light emitting diodes or the like.

The capsule receiving zone **25** may include a recess formable by various means. In one embodiment, such a recess is defined by forming an aperture **27** through an intermediate portion of the brush head **14**, and then closing the recess from behind with a cover (not shown). Alternatively, such a recess may be formed by conventional molding or other shaping techniques.

While a manually operated toothbrush **10** is shown, an electrically operated toothbrush with the same features as described herein is specifically contemplated as encompassed by the present invention.

As indicated previously, a toothbrush may include a moveable retaining element bounding a capsule receiving zone and permitting an oral care capsule to be loaded without spreading apart bristles of the toothbrush. For example, a rear portion of a brush head may include a hinged or slidable portion (e.g., a cover) that may be moved to an open position to expose an oral care capsule loading aperture. Such cover may be moved through operation of a corresponding toothbrush manipulation element associated with an oral care capsule dispensing device. Upon movement of such moveable retaining element to an open position, the oral care capsule is loaded into the oral care capsule loading aperture that constitutes an oral care capsule receiving zone. Thereafter, the moveable retaining element is returned to a closed position, and the oral care capsule is retained from behind by the retaining element, and preferably also from above by a plurality of angled bristles. In this regard, the moveable cover functions to selective cover or obstruct the oral care capsule loading aperture.

In another embodiment, a brush head of a toothbrush includes a flexural portion adapted to permit at least some bristles of a plurality of angled bristles to be spread apart so as to enable an oral care capsule to be loaded in a capsule receiving zone of such brush head. An associated dispensing device may include a corresponding structure adapted to automatically effectuate such flexure of the brush head to permit loading of at least one capsule into a capsule receiving zone defined therein. Following a loading operation, flexing force is released from the brush head to cause the brush head to return to a relaxed position with an oral care capsule retained in the capsule receiving zone by the angled bristles.

A dispenser **100** for oral care capsules, adapted for use with the toothbrush **10**, is illustrated in FIG. **3**, with various portions thereof illustrated in the ensuing FIGS. **4-10**.

The dispenser **100** includes a bottom surface **101**, a base portion **105**, a container **108**, and an outer lid **104**. The container **108** may be formed of a translucent or substantially optionally transmissive material to permit viewing of the contents therein. The container **108** may include a ramp (not shown), such as may be configured in a helical or spiral shape, to guide oral care capsules to a desired location (such as toward a distribution plate **141**, as illustrated in FIGS. **8-9**). The outer lid **104**, which may be pivotally coupled to the container portion **108**, optionally includes a figurine **102** and one or more light elements **103**, such as may be provided in view of a user for entertainment utility. A toothbrush insertion aperture **110**, sized and shaped to receive at least a portion of a toothbrush, is defined in the base portion **105**.

Referring to FIG. **4**, a toothbrush **10** may be oriented as shown for insertion into the toothbrush receiving aperture **110** of the dispensing device **100**. The bottom surface **101** may be equipped with a non-skid material or a suction cup to prevent displacement of the dispensing device **100** upon insertion of a portion of a toothbrush **10** therein.

Disposed above the base portion **105** of the dispensing device **100** is a container **108** adapted to retain a plurality of oral care capsules (not shown) therein. A rotatable vertical shaft **132** may be provided along a vertical axis of the container **108** to mechanically couple the container **108**, via inner lid **135** thereof, to a motor **124** (illustrated in FIG. **5**). By way of such coupling, the outer lid **104** and figurine **102**, along

with distribution plate **141** (shown in FIGS. **8-9**) may be caused to rotate through operation of the motor. If desired, the container **108** or a portion thereof may be coupled to rotate by operation of the motor **124** for user entertainment and/or dispensing utility. An orifice plate **131**, defining an orifice **134** adapted to permit the passage of an oral care capsule in the base portion **105**, is disposed below the container **108**.

FIGS. **5-6** illustrate selected internal components of the base portion **105** as positioned relative to a toothbrush **20** positioned for insertion therein. The toothbrush insertion aperture **110** leads to a guide tube **112** that guides the toothbrush head **20** into position for loading of an oral care capsule therein. Disposed within the guide tube is a toothbrush manipulation element in the form of a bristle spreader **119** defined an aperture **120** and having a wedge-shaped leading edge **119**A. Such leading edge **119**A may be configured as a wedge or block adapted to provide the desired spreading functionality. A close-up perspective view of the bristle spreader **119** is shown in FIG. **7**. As the brush head **20** is inserted past the bristle spreader **119**, the wedge-shaped leading edge **119**A of the spreader **119** spreads apart the angled bristled **26**A to prepare the brush head **20** to receive an oral care capsule. Although the illustrated embodiment is directed to a specific mechanical oral care capsule loading mechanism, and of various other mechanically or electrically actuated means may be used, as will be recognized by those skilled in the art, to provide automatic dispensing operation. In the illustrated embodiment, the toothbrush head **20** is inserted into the guide tube **112** to contact a push bar **114** joined via arm **115** a lever **117** having an associated pivot **116** and return spring **126**. Upon depressing the push bar **114**, the lever is forced toward the guide tube **112** and the aperture-defining bristle spreading element **119** disposed therein. In this manner, an oral care capsule **200** disposed between the lever **117** (e.g., opposite tab **118**) may be pushed through a the aperture **120** of the bristle spreader **119**, past the spread-apart angled bristles **26**A, and into the oral care capsule receiving zone **25** of the brush head **20** of the toothbrush **10**. Upon removal of the brush head from the bristle spreader **119**, the angled bristles **26**A return to their relaxed position to contract around an oral care capsule disposed within the capsule receiving zone **25**.

Although FIG. **6** illustrates loading of an oral care capsule **200** laterally in a toothbrush head **20**, a dispensing device may be configured for capsule loading in any desired direction. In one embodiment, a dispensing device is adapted to load an oral care capsule in an upward direction into a capsule receiving zone of a corresponding toothbrush head. In yet another embodiment, a dispensing device is adapted to load an oral care capsule in a downward direction into a capsule receiving zone of a corresponding toothbrush head.

FIGS. **5-6** further illustrate a battery holder **121** including two batteries **122**, and a motor **124** coupled to receive power from the batteries **122** via cable **123**. Such motor **124** may be used to set in motion any desired portion of the dispensing device **100**, such as the container **108**, figurine **102**, and/or distribution plate **141** (illustrated in FIGS. **8-9**). As an alternative to batteries **122**, the dispensing device may be operated via alternating current input with an appropriate internal AC/DC converter (not shown).

The dispensing device **100** may further include a sterilization element, such as an ultraviolet light or other element (not shown), disposed in, along, or proximate to the guide tube **112**. Such sterilization element may be activated upon insertion of a brush head **20** into the guide tube **112** to effect sterilization of the brush head **20** and therefore avoid pathogen growth (e.g., along any of the brush head **20**, the guide tube **112**, the spreading element **119**, the push bar **114**) and potential for transfer of pathogens from one surface (or toothbrush) to the next. Such sterilization element may be operated by the batteries **122** or another power source. Moreover, any surfaces subject to contacting a toothbrush insertable into the dispensing device **100**, and even the toothbrush **20**, may be coated or otherwise formed with an antibacterial substance such as 5-chloro-2phenol (2,4dichlorophenoxy) commonly sold under the trade name Microban®.

Referring to FIGS. **8-9**, the dispensing device **100** preferably includes a rotatable distribution plate **141** including a plurality of apertures **144**A-**144**H each sized to receive an oral care capsule, with the distribution plate **141** disposed above the orifice plate **131**. The apertures **144**A-**144**H of the distribution plate **141** are positioned to permit oral care capsules disposed therein to drop into the orifice **134**, preferably one at a time, upon rotation of the distribution plate **141**. The orifice **134** of the orifice plate **131** is disposed immediately above the oral care capsule **200** shown in FIG. **6**, such that an oral care capsule **200** that falls through the orifice **134** is ready for loading through the aperture **120** of the bristle spreading element **119** into a brush head **20** inserted into the guide tube **112**. The distribution plate **141** further includes a central aperture **145** that is keyed or otherwise shaped to receive a lower torque transfer element **133** associated with the shaft **132**, to rotate the distribution plate **131** without slippage. Likewise, the outer lid **104** may include an aperture **136** that is keyed or otherwise shaped to receive an upper torque transfer element **134** associated with the shaft **132**, to permit the lid **104** and optional figurine **102** to rotate as well. Electrical contacts may be further provided through the shaft **132**, torque transfer elements **133**, **134**, and aperture **136** to supply electrical power to the signaling element **103** (e.g., LED) associated with the figurine **102**.

The distribution plate **141** is preferably closely spaced relative to the orifice plate **131**, and one or more seals (not shown) may be provided therebetween. Any of the distribution plate **141** and orifice plate **131** may be formed or coated with a friction-reducing material, such as polytetrafluoroethylene (PTFE) to minimize wear or possible binding therebetween. Between dispensing cycles, the distribution plate **141** preferably rests in a position wherein none of the apertures **144**A-**144**H are aligned with the orifice **131** of the orifice plate **134**. This promotes sealing of the container **108**, so as to minimize infiltration of moisture into the container **108** that might otherwise degrade water-dissolvable capsule shell or coating materials.

As toothbrushes are conventionally utilized in bathroom environments that may be quite moist, and oral care capsules may have water-dissolvable outer shell or coating materials, it is desirable to minimize presence of moisture in a container **108** having a plurality of oral care capsules disposed therein. Referring to FIG. **10**, in one embodiment a desiccant material **160** may be disposed to receive moisture from a container **108**. Such desiccant material **160** may be provided as a central portion of the container **108** or in any other desired location. Such desiccant may include a moisture absorbing board, silica gel, clay, or a molecular sieve, whether disposed loosely or packed, in a (e.g., mesh) pouch or other permeable retainer, disposed in moisture receiving relationship relative to the interior of the container **108**. A cover **170** defining an aperture **172** may be provided over the desiccant **160** and the container **108**. Such cover **170** may be permanently sealed to the container **108**, or may be removable to permit replacement of the desiccant material.

The container **108** preferably comprises a cartridge that may be removed from the dispensing apparatus and replaced

by the user. Such container may alternatively be refilled by the user through a capsule insertion port (not shown).

In another embodiment, a dispensing device includes a plurality of toothbrush insertion apertures each adapted to receive a portion of a different toothbrush, so as to enable multiple users each having different toothbrushes to use the same dispenser without requiring contact between multiple brushes and single capsule interface surface of the dispenser. Such dispenser may resemble the dispenser **100** described hereinabove with reference to FIGS. **3-4**, but modified to include multiple toothbrush insertion apertures and guide tubes each intended to receive a different toothbrush. Referring to FIG. **11**, a base portion **205** of a dispensing device has a bottom surface **201** and includes three guide tubes **212**A-**212**C. Each guide tube **212**A-**212**C has an associated toothbrush insertion aperture (e.g., toothbrush insertion aperture **210**A for guide tube **212**A is shown; it is to be understood that corresponding toothbrush insertion apertures are provided for guide tubes **2128**, **212**C) adapted to receive a portion of a different toothbrush. Each guide tube **212**A-**212**C has an associated bristle spreading element **219**A-**219**C adapted to spread apart bristles of a toothbrush as described hereinabove, to permit an oral care capsule to be supplied to the toothbrush through an aperture **220**A-**220**C associated with the respective guide tube **212**A-**212**C.

Each toothbrush insertion aperture (e.g., **210**A) and/or guide tube **212**A-**212**C preferably has an associated marking element (e.g., marking element **211**) providing visible differentiation between the different toothbrush insertion apertures of the device. Such marking elements (e.g., marking element **211**A) may differ in terms of color, size, shape, texture, or any combination of the foregoing parameters. Each marking element (e.g., **211**A) may be provided in any suitable location proximate to an associated toothbrush aperture (e.g., **210**A), such as along outer surface of the base **205**, within a guide tube **212**A-**212**C, or both.

The base **205** shown in FIG. **11** is preferably stationary in character, with the lower surface **201** disposed on or just above an underlying surface such as a countertop. Various methods may be employed to supply oral care capsules to each aperture **220**A-**220**C. In one embodiment, separate ramps (not shown) may be provided to guide oral care capsules from a container (e.g., container **108** shown in FIG. **4**) to each aperture **220**A-**220**C, with an optional interposing distribution plate (e.g., distribution plate **141** shown in FIGS. **8-9**, optionally modified to include multiple apertures) for regulating passage of oral care capsules. In another embodiment, a single ramp or guide may be employed and selectively moved (e.g., in conjunction with movement of a container **108**) into position to supply an oral care capsule to an aperture **220**A, **220**B, **220**C. Such movement may include manual operation by a user, or automated movement with an electric motor (not shown).

In operation of a dispenser including the base portion **210**, a first user inserts a portion of a toothbrush (e.g., toothbrush **10** as described hereinabove) into a toothbrush insertion aperture (e.g. insertion aperture **210**A) to contact a bristle spreader (e.g., bristle spreader **219**A) disposed therein. Each toothbrush insertion aperture shown in FIG. **11** is arranged to receive a toothbrush **10** (as described hereinabove) with bristles facing upward. The bristle spreader (e.g., **219**A) has a wedge-shaped leading edge adapted to spread apart angled bristles of the toothbrush **10** to prepare the brush head **20** to receive an oral care capsule. An oral care capsule (not shown) is directed through an oral care capsule loading aperture (e.g., aperture **220**A) past spread-apart angled bristles **26**A, and into an oral care capsule receiving zone **25** of the brush head **20** of the tooth brush **10**. Any various loading mechanism (e.g., mechanically and/or electrically actuated) within the knowledge of one skilled in the art may be used to load a toothbrush with an oral care capsule as described herein. Upon removal of the brush head **20** from the bristle spreader **219**A, the angled bristles **26**A return to their relaxed position to contract around an oral care capsule disposed within the capsule receiving zone **25**. The toothbrush **10** is then removed from the toothbrush insertion aperture **210**A, and utilized by the user for oral cleaning.

Second and third users with different toothbrushes may repeat the foregoing procedure, but each utilizing dedicated toothbrush insertion apertures and guide tubes **210**A, **210**B, **210**C, to prevent contact between different brushes and any single interface surface of the dispenser.

While the invention has been has been described herein in reference to specific aspects, features and illustrative embodiments of the invention, it will be appreciated that the utility of the invention is not thus limited, but rather extends to and encompasses numerous other variations, modifications and alternative embodiments, as will suggest themselves to those of ordinary skill in the field of the present invention, based on the disclosure herein. Correspondingly, the invention as hereinafter claimed is intended to be broadly construed and interpreted, as including all such variations, modifications and alternative embodiments, within its spirit and scope.

What is claimed is:

1. A toothbrush comprising a brush head that includes:

a front surface;

a back surface;

a plurality of vertical bristles extending upward from the front surface;

a capsule receiving zone sized to receive an oral care capsule, the capsule receiving zone including a recess defined in the front surface and arranged to receive at least a portion of an oral care capsule inserted past the vertical bristles; and

at least one pair of angled capsule retaining elements that are elevated above the recess and configured to retain an oral care capsule in the capsule receiving zone, wherein each pair of the at least one pair angled capsule retaining elements includes a first and a second angled capsule retaining element arranged along diametrically opposing sides of an oral care capsule when present in the capsule receiving zone; and wherein at least a portion of each angled capsule retaining element of the at least one pair of capsule retaining elements is arranged to contact the oral care capsule.

2. The toothbrush of claim **1**, wherein the at least one pair of angled capsule retaining elements comprises multiple pairs of angled bristles canted away from vertical in a direction toward a center of the capsule receiving zone, and the brush head includes a flexural portion adapted to permit at least some bristles of the multiple pairs of angled bristles to be spread apart so as to enable an oral care capsule to be loaded into the capsule receiving zone.

3. The toothbrush of claim **1**, further comprising a signaling element adapted to provide a user-perceptible signal indicative of any of oral care cleansing cycle time and attainment of a threshold oral care cleansing cycle time.

4. The toothbrush of claim **3**, further comprising a sensor adapted to sense a condition indicative of usage of said toothbrush in an oral care cleansing cycle.

5. The toothbrush of claim **1**, wherein each capsule retaining element of the at least one pair of angled capsule retaining

elements comprises a retaining element canted away from vertical in a direction toward a center of the capsule receiving zone.

6. The toothbrush of claim **5**, wherein the at least one pair of angled capsule retaining elements comprises angled bristles canted away from vertical in a direction toward a center of the capsule receiving zone.

7. The toothbrush of claim **5**, wherein the at least one pair of angled capsule retaining elements is arranged between the plurality of vertical bristles and a center of the capsule receiving zone.

8. The toothbrush of claim **1**, including an oral care capsule retained by the at least one pair of capsule retaining elements in the capsule receiving zone, wherein the oral care capsule comprises one or more of the following: a dentrifice composition, a whitening composition, an anticalculus composition, and antibacterial composition, and a breath freshening composition.

9. A method comprising loading an oral care capsule into a capsule receiving zone of a toothbrush according to claim **1** by inserting at least a portion of the oral care capsule in a direction past the vertical bristles into the recess, and retaining the oral care capsule in the capsule receiving zone using the at least one pair of angled capsule retaining elements.

10. A toothbrush comprising a brush head that includes:

a front surface and a back surface that opposes the front surface;

a plurality of bristles extending upward from the front surface and arranged distal from a center of the front surface;

a capsule receiving zone including a recess defined in the front surface and arranged to receive at least a portion of an oral care capsule insertable past the bristles into the recess; and

at least three angled capsule retaining elements that are elevated above the recess, are configured to retain an oral care capsule in the capsule receiving zone, and are canted away from vertical in a direction toward a center of the capsule receiving zone, wherein each angled capsule retaining element of the at least three angled capsule retaining elements is arranged proximate to a perimeter of the capsule receiving zone at a position at least 108 degrees apart from at least one other angled capsule retaining element of the at least three angled capsule retaining elements relative to a center of the capsule receiving zone; and wherein at least a portion of each angled capsule retaining element of the at least three angled capsule retaining elements is arranged to contact the oral care capsule.

11. The toothbrush of claim **10**, wherein the at least three angled capsule retaining elements are arranged between the plurality of bristles and a center of the capsule receiving zone.

12. The toothbrush of claim **10**, wherein the at least three angled capsule retaining elements comprise at least three angled bristles.

13. The toothbrush of claim **10**, including an oral care capsule retained by the at least three capsule retaining elements in the capsule receiving zone, wherein the oral care capsule comprises one or more of the following: a dentrifice composition, a whitening composition, an anticalculus composition, and antibacterial composition, and a breath freshening composition.

14. A method comprising loading an oral care capsule into a capsule receiving zone of a toothbrush according to claim **10** by inserting at least a portion of the oral care capsule in a direction past the bristles into the recess, and retaining the oral care capsule in the capsule receiving zone using the at least three angled capsule retaining elements.

15. The toothbrush of claim **1**, wherein the at least one pair of angled capsule retaining elements comprises multiple pairs of angled capsule retaining elements.

16. The toothbrush of claim **1**, wherein at least a portion of each angled capsule retaining element of the at least one pair of angled capsule retaining elements is arranged to overlap a portion of the recess of the capsule receiving zone.

17. The toothbrush of claim **10**, wherein at least a portion of each angled capsule retaining element of the at least three angled capsule retaining elements is arranged to overlap a portion of the recess of the capsule receiving zone.

18. The toothbrush of claim **10**, wherein each angled capsule retaining element of the at least three angled capsule retaining elements is arranged proximate to a perimeter of the capsule receiving zone at a position at least 144 degrees apart from at least one other angled capsule retaining element of the at least three angled capsule retaining elements relative to a center of the capsule receiving zone.

* * * * *