US008240937B2

(12) **United States Patent**
Sorrentino et al.

(10) **Patent No.: US 8,240,937 B2**
(45) **Date of Patent: Aug. 14, 2012**

(54) **ORAL CARE IMPLEMENT WITH BEAD RETENTION**

(75) Inventors: **Alan Sorrentino**, Cranbury, NJ (US); **Douglas J. Hohlbein**, Pennington, NJ (US); **Al Sprosta**, Maplewood, NJ (US)

(73) Assignee: **Colgate-Palmolive Company**, New York, NY (US)

(*) Notice: Subject to any disclaimer, the term of this patent is extended or adjusted under 35 U.S.C. 154(b) by 1101 days.

(21) Appl. No.: **12/018,817**

(22) Filed: **Jan. 24, 2008**

(65) **Prior Publication Data**

US 2008/0120798 A1 May 29, 2008

Related U.S. Application Data

(63) Continuation-in-part of application No. 11/314,716, filed on Dec. 21, 2005, now Pat. No. 7,478,959, which is a continuation-in-part of application No. 10/843,135, filed on May 11, 2004, now Pat. No. 7,331,731, which is a continuation-in-part of application No. PCT/US03/27455, filed on Sep. 4, 2003, said application No. 11/314,716 is a continuation of application No. 29/231,483, filed on Jun. 6, 2005, now Pat. No. Des. 532,607, which is a continuation of application No. 29/213,754, filed on Sep. 23, 2004, now Pat. No. Des. 532,202, which is a continuation-in-part of application No. 10/843,135, filed on May 11, 2004, now Pat. No. 7,331,731, which is a continuation of application No. PCT/US03/27455, filed on Sep. 4, 2003, said application No. 11/314,716 is a continuation of application No. 29/231,487, filed on Jun. 6, 2005, now Pat. No. Des. 528,803.

(60) Provisional application No. 60/408,321, filed on Sep. 5, 2002.

(51) **Int. Cl.**
A47L 13/22 (2006.01)
B43K 5/14 (2006.01)

(52) **U.S. Cl.** **401/282**; 401/268; 401/132

(58) **Field of Classification Search** 401/132–135, 401/268, 270, 282, 286; 433/89, 90; 15/167.1, 15/167.2
See application file for complete search history.

(56) **References Cited**

U.S. PATENT DOCUMENTS

792,471 A 6/1905 Smith
(Continued)

FOREIGN PATENT DOCUMENTS

CA 2236416 5/1997
(Continued)

OTHER PUBLICATIONS

International Search Report PCT/US2009/030090 Mailed Apr. 3, 2009.

Primary Examiner — David Walczak
(74) *Attorney, Agent, or Firm* — Amy M. Fernandez

(57) **ABSTRACT**

An oral care toothbrush includes a head mounted to one end of the handle containing a plurality of oral care elements. An oral care accessory is mounted to the opposite end of the handle. An oral care dispenser is mounted in the head within the cleaning field defined by the oral care elements. The oral care dispenser may be held in place by a plurality of prongs located in the field defined by the oral care elements. The toothbrush may be made of small size and of lightweight so as to be readily portable for use away from the home.

25 Claims, 7 Drawing Sheets

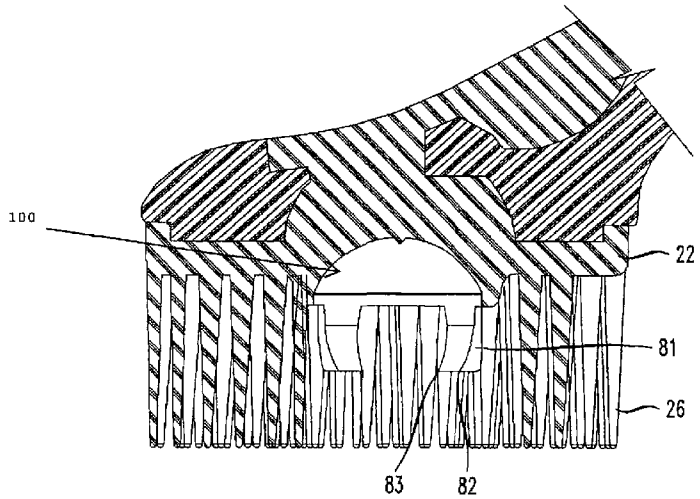

U.S. PATENT DOCUMENTS

846,900	A		3/1907	Bloom
876,185	A		1/1908	Hillman
1,214,556	A		2/1917	Vene et al.
1,256,662	A		2/1918	Cleman et al.
1,411,681	A		4/1922	Burlew
1,500,722	A		7/1924	Roush
1,575,317	A		3/1926	Carmichael
1,602,531	A		10/1926	Itoh
1,784,986	A		12/1930	Eisenberg
1,796,367	A		3/1931	Grove
1,797,946	A		3/1931	Eichel
1,811,833	A		6/1931	Simon
RE19,006	E		11/1933	Graves
1,944,067	A		1/1934	Collins
1,950,767	A		3/1934	Abbott
1,968,303	A		7/1934	McMath
D94,503	S		1/1935	Hadley
1,995,374	A		3/1935	Young
2,077,758	A		4/1937	Johnson et al.
D112,719	S		12/1938	Miller
2,233,831	A		3/1941	Burke
2,241,584	A		5/1941	Cohen
2,259,928	A		10/1941	Eaton
2,262,982	A		11/1941	Wolcott
2,307,493	A		1/1943	Davidson
2,386,085	A		10/1945	Babel
D161,873	S		1/1951	Rosengard
2,649,959	A		8/1953	Hallahan
2,710,982	A		6/1955	Gillem
2,736,917	A		3/1956	Goldstein et al.
2,778,045	A		1/1957	Bly et al.
2,793,381	A		5/1957	McWhorter
2,813,290	A		11/1957	Aschenbach
3,068,571	A		12/1962	Thompson
3,078,856	A		2/1963	Bender et al.
3,103,935	A		9/1963	Woodrow
3,148,684	A		9/1964	Keeler
3,165,776	A		1/1965	Tuseth
3,301,267	A		1/1967	Gerardi et al.
3,316,580	A		5/1967	Tebbs
3,432,245	A		3/1969	Hudson
3,458,268	A		7/1969	Wozab et al.
3,491,396	A		1/1970	Granieri, Jr. et al.
3,501,243	A		3/1970	Anderson et al.
3,536,410	A		10/1970	Wargoe
3,589,823	A		6/1971	Hendrickson
3,609,789	A		10/1971	Slater
3,698,405	A		10/1972	Walker
3,879,139	A		4/1975	Dahl
3,917,420	A		11/1975	Watson
4,039,261	A		8/1977	Evans
4,194,290	A		3/1980	Vallhonrat
4,292,304	A		9/1981	Barels et al.
4,427,116	A		1/1984	Brown
D278,863	S		5/1985	Bradley
4,598,437	A		7/1986	Ernest et al.
4,610,045	A	*	9/1986	Rauch 15/167.1
4,628,564	A		12/1986	Youssef
4,690,816	A		9/1987	Hata et al.
4,829,621	A		5/1989	Phenegar
4,864,676	A		9/1989	Schaiper
4,911,187	A		3/1990	Castillo
4,961,717	A		10/1990	Hickey
5,052,071	A		10/1991	Halm
5,061,106	A		10/1991	Kent
5,133,971	A		7/1992	Copelan et al.
5,184,719	A		2/1993	Gordon
5,213,428	A		5/1993	Salaman
5,366,310	A		11/1994	Armelles Flors
5,390,984	A		2/1995	Boucherie et al.
5,393,796	A		2/1995	Halberstadt et al.
5,398,367	A		3/1995	Lu
5,476,333	A		12/1995	Matthews
5,490,530	A		2/1996	Snowden
5,522,109	A		6/1996	Chan
5,533,791	A		7/1996	Boucherie
D378,166	S		2/1997	Savitt et al.
5,609,890	A		3/1997	Boucherie
D378,711	S		4/1997	Occhetti
5,633,083	A		5/1997	Iwai et al.
5,860,183	A		1/1999	Kam
5,888,002	A		3/1999	Fenstersheib et al.
5,915,868	A		6/1999	Frazell
6,004,059	A		12/1999	Zaccaria
6,018,840	A		2/2000	Guay et al.
6,090,488	A		7/2000	Kweon
6,135,274	A		10/2000	James
D435,347	S		12/2000	Rumsey, Jr.
6,158,444	A		12/2000	Weihrauch
6,179,503	B1		1/2001	Taghavi-Khanghah
6,321,407	B1		11/2001	Weihrauch
6,397,860	B1		6/2002	Hill, II
6,401,291	B1		6/2002	Lee
6,463,618	B1		10/2002	Zimmer
6,524,023	B2		2/2003	Andersen
6,526,993	B1		3/2003	Wagner
6,602,013	B2		8/2003	Clark
D487,351	S		3/2004	Frazell
7,039,984	B1		5/2006	Watanabe et al.
D527,528	S		9/2006	Hohlbein
D528,803	S		9/2006	Hohlbein
D532,202	S		11/2006	Hohlbein
D532,607	S		11/2006	Hohlbein
7,478,959	B2		1/2009	Hohlbein
2002/0106234	A1		8/2002	Johnson et al.
2002/0152538	A1		10/2002	McDevitt et al.
2002/0175101	A1		11/2002	Albert
2003/0100908	A1		5/2003	Grumberg
2003/0188761	A1		10/2003	Garcia et al.
2006/0165473	A1		7/2006	Hohlbein
2008/0104786	A1		5/2008	Hohlbein et al.
2008/0120798	A1		5/2008	Sorrentino et al.

FOREIGN PATENT DOCUMENTS

CH	664271		2/1988
CN	2111027		7/1992
CN	2420901		2/2001
CN	2469777	Y	1/2002
CN	1694636		11/2005
DE	594 479	C	3/1934
DE	850981		7/1985
DE	3529953		3/1987
DE	3638696		5/1988
DE	4127429		2/1993
DE	4231817		3/1994
DE	4238421		5/1994
DE	19531368		2/1997
DE	19842984		8/2000
DE	19925568		12/2000
EP	0332026		9/1989
EP	0475314		3/1992
EP	0481926		4/1992
EP	0872195		10/1998
EP	1415572		5/2004
EP	1639913		3/2008
ES	2090287		10/1996
FR	2550429		2/1985
FR	2554331		5/1985
FR	2602129		2/1988
FR	2646068		10/1990
FR	2654598		5/1991
FR	2754436		4/1998
FR	2772569		6/1999
FR	2772571		6/1999
FR	2822658		10/2002
GB	228460		2/1925
GB	746649		3/1956
GB	2297489		8/1996
GB	2351015		12/2000
GB	2388529		11/2003
GB	2394653		5/2004
JP	3-043427	U	11/1997
JP	10216158		8/1998
JP	2002-142865	A	5/2002
JP	2003245133		9/2003
SU	1291019		2/1987
SU	1417859		8/1988

TW	316404	9/1997
WO	WO 87/00425	1/1987
WO	WO 97/16995	5/1997
WO	WO 98/57570	12/1998
WO	WO 99/23910	5/1999
WO	WO 99/60886	12/1999
WO	WO 01/26504	4/2001
WO	WO 02/15736	2/2002
WO	WO 02/26079	4/2002
WO	WO 02/34083	5/2002
WO	WO 02/058508	8/2002
WO	WO 03/037210	5/2003
WO	WO 2004/010821	2/2004
WO	WO 2004/021914	3/2004
WO	WO 2005/110149	11/2005

* cited by examiner

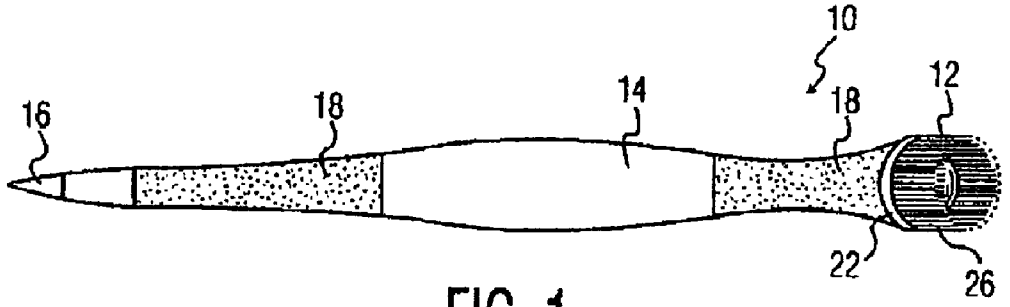

FIG. 1

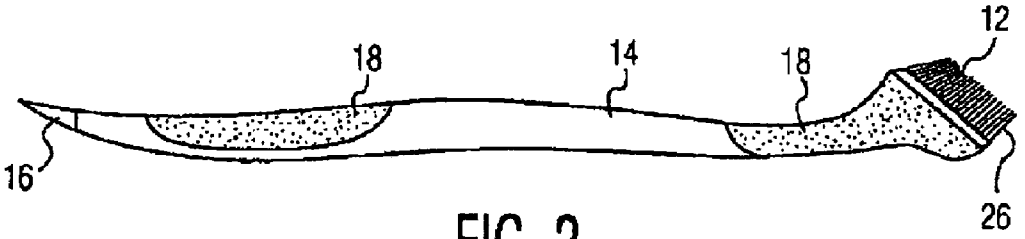

FIG. 2

FIG. 3

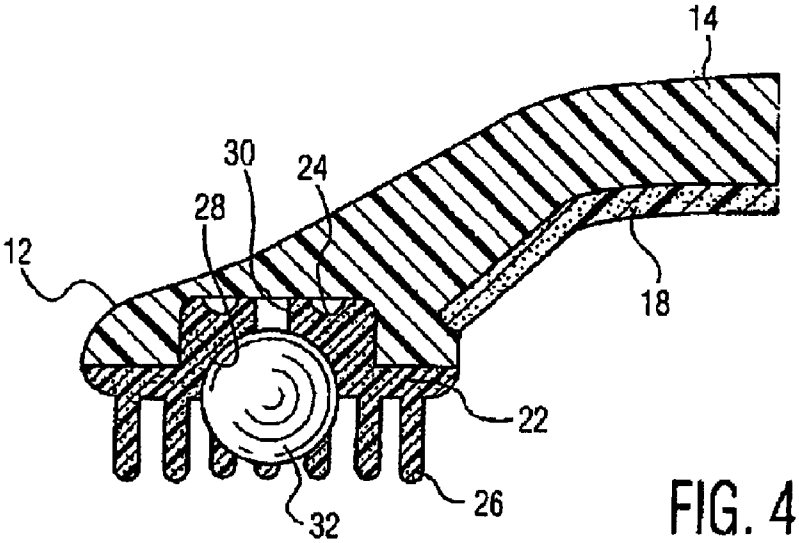

FIG. 4

FIG. 5

FIG. 6

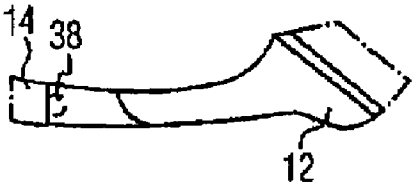

FIG. 7

FIG. 8

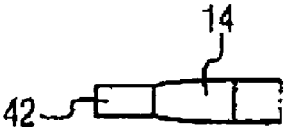

FIG. 9

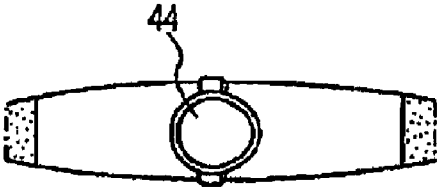

FIG. 10

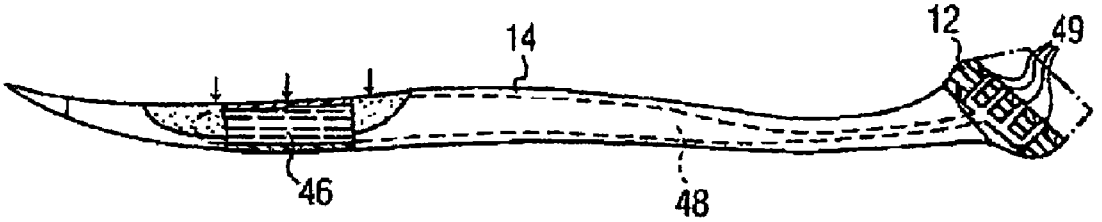

FIG. 11

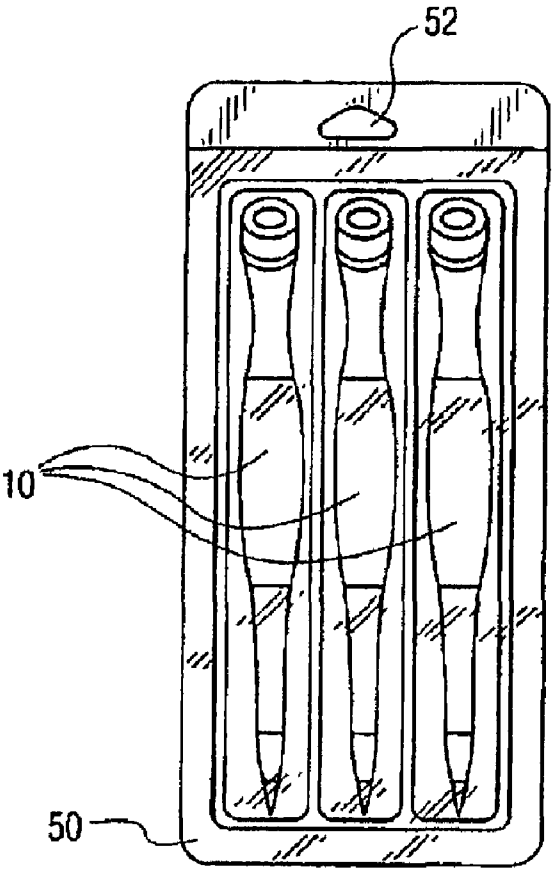

FIG. 12

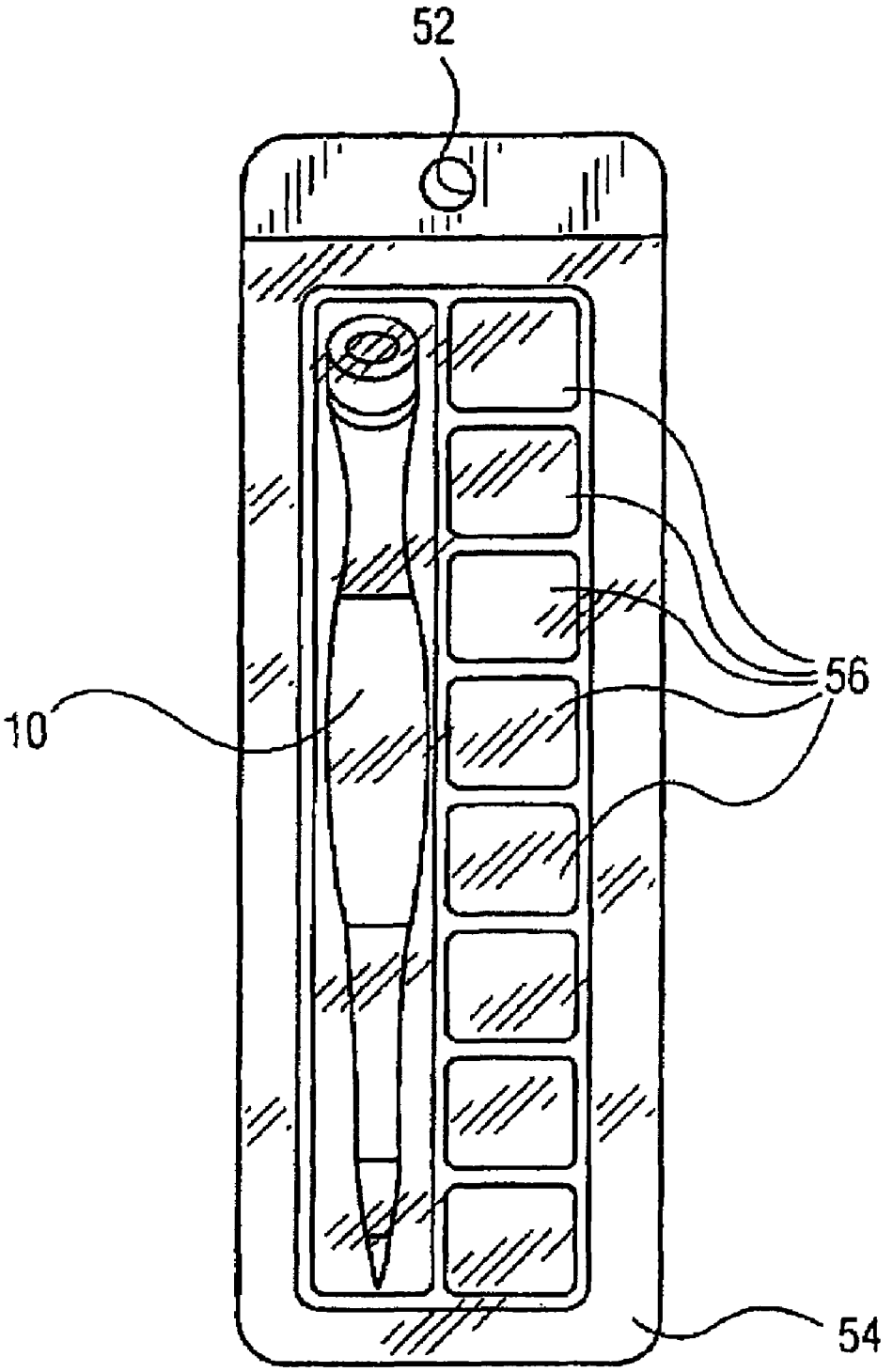

FIG. 13

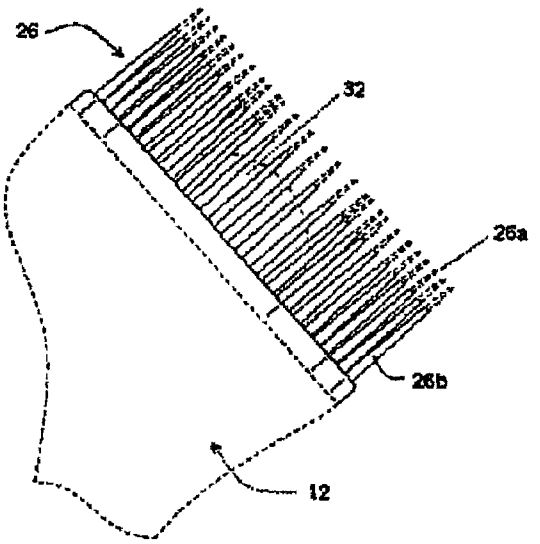

FIG. 14

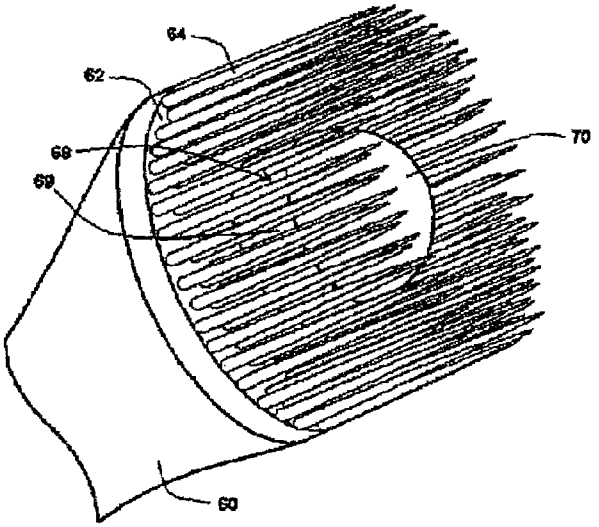

FIG. 15

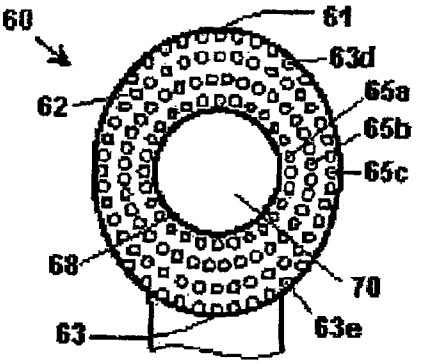

FIG. 16

FIG. 17

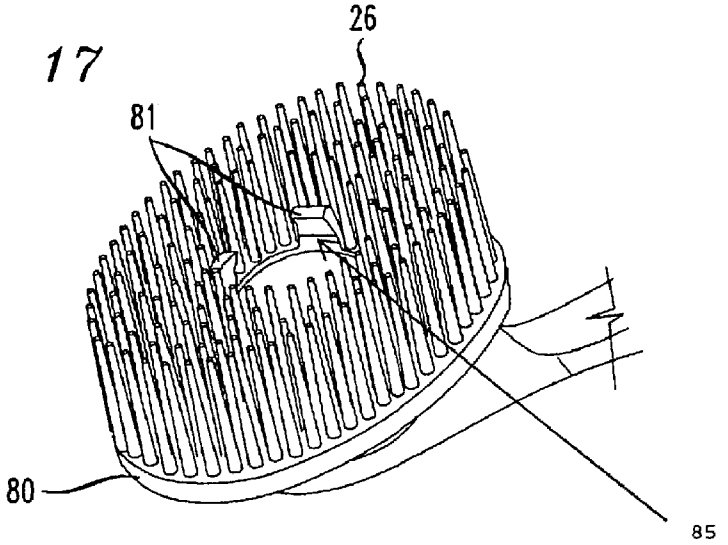

FIG. 18

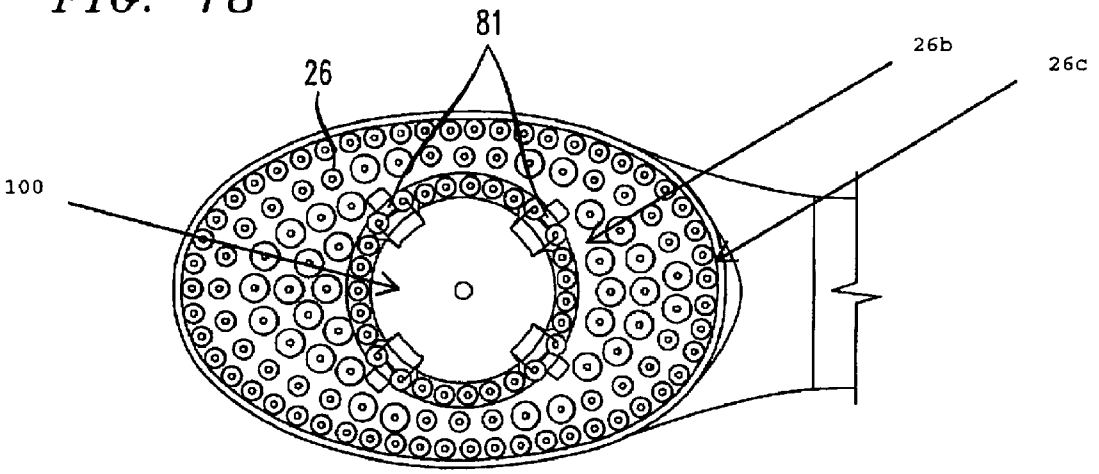

FIG. 19

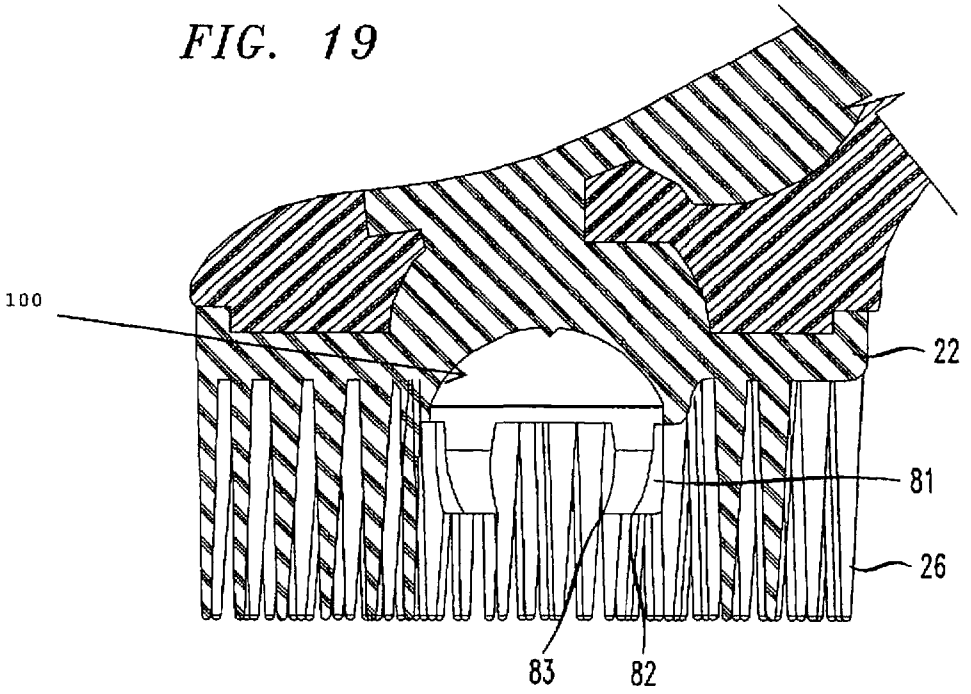

FIG. 20

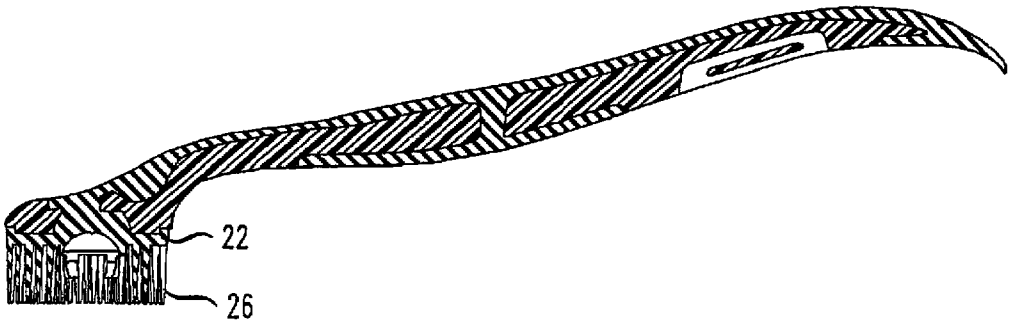

ORAL CARE IMPLEMENT WITH BEAD RETENTION

CROSS-REFERENCE TO RELATED APPLICATIONS

This application is a continuation-in-part of U.S. application Ser. No. 11/314,716, filed Dec. 21, 2005, now U.S. Pat. No. 7,478,959, which is (1) a continuation-in-part of U.S. application Ser. No. 10/843,135, filed May 11, 2004, now U.S. Pat. No. 7,331,731, which is a continuation-in-part of International application PCT/US03/027455, filed Sep. 4, 2003, which claimed priority to U.S. Application 60/408,321, filed Sep. 5, 2002; (2) a continuation of U.S. application Ser. No. 29/231,483, filed Jun. 6, 2005, now U.S. Pat. No. D532, 607, which is a continuation of U.S. patent application Ser. No. 29/213,754, filed Sep. 23, 2004, now U.S. Pat. No. D532, 202, which is a continuation in part of U.S. patent application Ser. No. 10/843,135, filed May 11, 2004 now U.S. Pat. No. 7,331,731, which is a continuation in part of International application PCT/US03/27455, filed Sep. 4, 2003, which claims priority to U.S. Patent Application 60/408,321, filed Sep. 5, 2002; and (3) a continuation of U.S. application Ser. No. 29/231,487, filed Jun. 6, 2005, now U.S. Pat. No. D528, 803, each of the above-referenced applications being incorporated herein by reference in their entirety.

BACKGROUND OF THE INVENTION

The present application relates generally to toothbrushes, and, more particularly, to a toothbrush which may have an oral care dispenser, such as a breath freshening, teeth cleaning gel capsule, and an oral care accessory, such as a toothpick.

The advantages of good dental hygiene are well known. Often, however, toothbrushes are forgotten when one is traveling or away from home. Hotels, health care facilities, nursing homes, hospitals, daycare facilities, schools, airlines, etc. have a need for single use disposable or limited multiple use toothbrushes that may be economically supplied to and discarded by individuals without a toothbrush and/or a water supply. Such toothbrushes could be used in vending machines, or distributed in large quantities for simple, portable use from anywhere.

Various types of disposable, limited use, or portable toothbrushes are known in the art. For example, some toothbrush systems have attempted to meet some of these needs by providing toothpaste within the toothbrush itself, through an integrated channel, for distribution through the toothbrush and around the bristles. This approach can be less economical due to the added manufacturing costs of toothbrushes with integrated channels. In addition, the toothpaste in some of these integrated channel toothbrushes, not being properly sealed, has a tendency to become dry, hard and stale.

U.S. Pat. No. 6,135,274 shows an apparatus for brushing teeth that includes an outer bag, a toothbrush sealed within the outer bag, and a dispenser sealed within the outer bag and containing a mouth care solution. In use, the rupturable dispenser is squeezed or otherwise subjected to pressure while the toothbrush remains sealed within the outer bag. Unfortunately, the apparatus for brushing teeth requires an outer bag, increasing the cost of the apparatus, and fails to provide the rupturable dispenser and toothbrush as one complete, connected unit. The reference also fails to provide a toothpick mechanism for cleaning in between teeth, and which is also connected to the toothbrush.

U.S. Pat. No. 6,397,860 discloses a disposable, waterless tooth brushing assembly that includes a toothbrush, a non-foaming, saliva-activated, teeth-cleaning agent pre-applied to the bristles of the toothbrush, a small moistened disposable towel for user after teeth cleaning, and a compact, lightweight, two-layer heat-sealed packaging container for pre-use sanitary storage of the toothbrush and towel. Like U.S. Pat. No. 6,135,274, the assembly of U.S. Pat. No. 6,397,860 requires a packaging container, increasing the cost of the assembly, and fails to provide a rupturable dispenser and toothbrush as one complete, connected unit. The reference also fails to provide a toothpick mechanism for cleaning in between teeth, and which is also connected to the toothbrush.

Published U.S. application 2002/0106234 discloses a chewable toothbrush made of a flexible shell with bristles coupled to the shell and a chewable centerpiece disposed within the shell interior. A burstable capsule is disposed adjacent to the chewable centerpiece within the shell interior and maintains a digestible fluid.

BRIEF SUMMARY OF THE INVENTION

The present application solves one or more of the problems of the related art by providing in one embodiment a waterless toothbrush having a toothpick connected thereto to enable cleaning in between teeth, and a rupturable dispenser containing a dentifrice and being connected in the bristle portion of the toothbrush for dispensing the dentifrice to the teeth to provide teeth cleaning and breath freshening, to deliver a cleaning, polishing, whitening, between teeth cleaning, and breath freshening action in addition to enhancing the cleaning efficiency of a typical disposable or limited use toothbrush.

In one embodiment, a toothbrush may have (1) tooth surface cleaning provided by the toothbrush bristles or other cleaning elements and the dentifrice in the rupturable dispenser; (2) between teeth cleaning provided by the toothpick; and (3) breath freshening provided by the dentifrice in the rupturable dispenser.

As embodied and broadly described herein, an oral care toothbrush may comprise a handle having an oral care head mounted to one end of the handle with an oral care accessory mounted to an opposite end of the handle. A plurality of oral care elements such as cleaning/massage elements, which could be bristles, extending outwardly from the outer surface of the head. The head may also include one or more structures for dispensing oral care material in the oral care field of the head.

The oral care toothbrush may be characterized by its small size and light weight so that it is readily adaptable for travel use. The oral care toothbrush may be capable of having multiple functions by including an accessory as part of the toothbrush such as a toothpick, dental floss or tongue cleaner.

The oral care toothbrush may include a toothpick formed at one end of the handle; and a head connected at another end of said handle, said head having a bristle block that includes a plurality of bristles and retains a gel capsule therein, the gel capsule containing a mouth care solution. In further embodiments, the gel capsule can be replaced by a quantity of toothpowder, toothpaste or a tooth cleaning gel dentifrice, to provide the cleaning benefits of the dentifrice within the rupturable dispenser.

In some embodiments, a subset of bristles in the toothbrush head may include retaining members that hold the capsule in place. The retaining members may extend out of the head's bristle block, and may be curved inward to hold the capsule. The retaining members may be made of the same material as the other bristles, and may be shorter and wider than the bristles to provide greater support and rigidity.

Further features will become apparent from the detailed description given hereinafter. However, it should be understood that the detailed description and specific examples, while indicating preferred embodiments of the invention, are given by way of illustration only, since various changes and modifications within the spirit and scope of the invention will become apparent to those skilled in the art from this detailed description. It is to be understood that both the foregoing general description and the following detailed description are exemplary and explanatory only.

Among the advantages of some embodiments of the toothbrushes disclosed herein are that the size and configuration of the toothbrush allows discreet hygienic use, such as no fingers in the mouth, adapting it to be readily used in public areas. Such uses could be done without the need for a sink or fountain or other source of water.

BRIEF DESCRIPTION OF THE DRAWINGS

The features herein will become more fully understood from the detailed description given herein below and the accompanying drawings which are given by way of illustration only, and thus are not limitative of the present invention, and wherein:

FIG. **1** is a front elevational view of an oral care toothbrush with a toothpick and a breath freshening, teeth cleaning gel capsule connected thereto;

FIG. **2** is a side elevational view of the toothbrush shown in FIG. **1**;

FIG. **3** is a rear elevational view of the toothbrush shown in FIGS. **1-2**;

FIG. **4** is a fragmental, cross-sectional view of the head of an oral care toothbrush;

FIGS. **5-6** are side elevational views of other forms of heads for an oral care toothbrush;

FIG. **7** is a fragmental side elevational view showing a head detachably mounted to the handle for an alternate embodiment;

FIG. **8** is a fragmental cross-sectional elevational view showing a vibrating toothbrush head for an alternate embodiment;

FIGS. **9-10** are fragmental front elevational views partly broken away of portions of a handle for an alternate embodiment;

FIG. **11** is a side elevational view partly in section of yet another embodiment;

FIGS. **12-13** are front elevational views showing various forms of toothbrushes in a packaged or display condition;

FIG. **14** is a side view of a head of an embodiment with only portions of the cleaning elements shown in solid lines for purposes of focus and clarity;

FIG. **15** is a perspective view of one embodiment of a toothbrush head;

FIG. **16** is an enlarged perspective front view of the head of FIG. **15**;

FIG. **17** is a perspective view of an alternate toothbrush head embodiment;

FIG. **18** is an enlarged perspective front view of the head of FIG. **17**;

FIG. **19** is an enlarged cross-sectional side view of the head of FIG. **17**; and

FIG. **20** is a cross-sectional side view of an alternate embodiment toothbrush having the head shown in FIG. **17**.

DETAILED DESCRIPTION OF THE INVENTION

The following detailed description refers to the accompanying drawings. The same reference numbers in different figures identify the same or similar elements.

FIGS. **1-4** illustrate an oral care toothbrush **10** that includes a head **12** and a handle **14**. Head **12** may be a refill head and thus be removably connected to handle **14**, or head **12** may be permanently connected to head **12**.

The majority of handle **14** and a portion of head **12** may be molded from a variety of rigid materials, including plastics, resins, etc., such as, for example, polypropylene. An end portion of handle **14**, opposite the end head **12** is attached to an accessory, preferably a toothpick **16** formed of a resilient and soft thermoplastic elastomer. Toothpick **16** may be a refill and thus be removably connected to handle **14**, or toothpick **16** may be permanently connected to handle **14**. Toothpick **16** provides a mechanism for spot cleaning between teeth. Forming toothpick **16** of a soft elastomer provides more comfortable interproximal cleaning between teeth. Toothpick **16** could, however, be made of a stiff rigid material similar to the main portion of handle **14**, or could simply be a rubber or elastomeric pick adhered or otherwise mounted to the end of handle **14**.

Portions **18** of handle **14** may also be formed of a resilient and soft thermoplastic elastomer. The thermoplastic elastomer which forms toothpick **16** and handle portions **18** may be a thermoplastic vulcanate (TPV) consisting of a mixture of polypropylene and EPDM (ethylene propylene diene monomers) which is available as SANTOPRENE (brand), described in U.S. Pat. No. 5,393,796, or VYRAM (brand), another TPV consisting of a mixture of polypropylene and natural rubber. Both SANTOPRENE and VYRAM (brands) are elastomers marketed by Advanced Elastomer Systems. Other suitable elastomers include KRATON, a brand of styrene block copolymer (SBC) marketed by Shell, and DYNAFLEX G 2706 (brand), a thermoplastic elastomer marketed by GLS Corporation and which is made with KRATON (brand) polymer.

Handle **14** may further include dimples, bumps, or ridges protruding from portions of its surface, and providing a decorative appearance to handle **14** and enhanced gripping of handle **14** during use of toothbrush **10**. The dimples may be formed from the same material as soft elastomer portions **18** of handle **14** or from the same material as the majority of handle **14** (e.g., a rigid material such as polypropylene). All or part of handle **14** could be made of any suitable material, such as plastic, wood, metal or various natural materials which are biodegradable. Preferably handle **14** is made of a generally flat or oval shape rather than cylindrical in its gripping portion which would be between the spaced elastomer portions **18** to facilitate the gripping of the handle.

As shown in FIG. **4** another portion of head **12**, defining a bristle or cleaning element block **22** of head **12**, may also be formed of a resilient and soft thermoplastic elastomer, such as the thermoplastic elastomer used to form handle portions **18**. Cleaning block **22** may include one or more depressions **24** provided in a surface **30** thereof with an opening **30** therein that provides a cushioning effect to a rupturable dispenser, preferably a gel capsule **32**, contained therein, as described more fully below. Cleaning block **22** further includes a multitude of cleaning elements which could be conventional filament, preferably nylon, or elastomeric bristles or fingers **26** extending integrally outwardly from the outer surface of head **12**. In the illustrated embodiment as best shown in FIG. **4**, all of the cleaning elements **26** extend outwardly from the outer surface of block **22** the same distance so as to create a generally flat surface. Alternatively, however, some elements **26** may be shorter or longer than other elements **26**. The variable length of the cleaning elements **26** is illustrated by the dotted out tips **26***a* in FIG. **14**, with only body portions **26***b* of the

cleaning elements **26** shown in solid lines for purposes of clarity and to focus on the variable nature of such elements.

The term "cleaning elements" as used herein is intended to be used in a generic sense as cleaning elements or massage elements arranged in a circular cross-section shape or any type of desired shape, including straight portions or sinusoidal portions. It is to be understood that the specific illustration of the cleaning elements is merely for exemplary purposes. The features herein can, however, be practiced with various combinations of the same or different configurations (such as stapled, in-mold tufting (IMT) bristle technology as disclosed in U.S. Pat. Nos. 5,609,890, 5,390,984, and 5,533,791, the disclosures of which being incorporated by reference herein in their entirety, etc.) and/or with the same or different bristle materials (such as nylon bristles, spiral bristles, rubber bristles, etc.). Similarly, while FIGS. **1-4** illustrate the cleaning elements **26** to be generally perpendicular to the outer surface of head **12**, some or all of the cleaning elements **26** may be angled at various angles with respect to the outer surface of head **12**. It is thereby possible to select the combination of configurations, materials and orientations to achieve specific intended results, such as enhanced cleaning, tooth polishing, breath freshening, tooth whitening and/or massaging of the gums.

As stated above, the cleaning block **22** may include one or more depressions **24** which are designed to receive and retain an oral care dispenser, such as a rupturable gel capsule **32** therein. The one or more depressions **24** can be varied in size so as to accommodate not only varying size dispensers **32**, but varying quantities of toothpowder, a toothpaste or tooth cleaning gel dentifrice or other oral care material, for delivery to the dentiture as the elements **26** extending from the block **22** are applied thereto, during use of the present invention such that the oral care material enhances the cleaning of the dentiture by the cleaning elements. While the present invention can be manufactured containing a packed toothpowder, toothpaste or tooth cleaning gel dentifrice and used repeatedly by the user refilling the dispenser with toothpowder, toothpaste or tooth cleaning gel dentifrice, it is preferably used with one or more gel capsules **32** contained therein. Most preferably the present invention is used with a single gel capsule **32**, supplied therewith, so as to be most easily transported, used, and subsequently disposed of; however, it may also be used repeatedly with replaceable gel capsules **32**, and then disposed of.

It is preferred that the depression is in the form of a cushioned socket **28** sized and shaped to receive and retain the gel capsule **32**, without premature rupture of the gel capsule **32** prior to use thereof during application of the bristle block **22** to the dentiture and brushing thereof. Cushioning socket **28** opening **30**, and the material making up bristle block **22** provide a cushioning effect for gel capsule **32** to prevent gel capsule **32** from rupturing prior to use.

Gel capsule **32** holds and applies a mouth care solution onto bristles **26** of toothbrush head **12**. The mouth care solution may be a toothpaste, a gel, a mouthwash, or similar dentifrice or oral hygiene product, or a combination of the same contained in the rupturable capsule **32**. Preferably gel capsule **32** is a liquid-filled gel capsule having frangible, thin walls that easily rupture or burst when rubbed against the teeth, or dissolve when mixed with the saliva of a user. The materials making up gel capsule **32** and the oral or mouth care solution contained therein preferably are consumable by the user of toothbrush **10**, eliminating the need for water, a sink, or a waste receptacle to expectorate the gel capsule **32** or its contents. The mouth care solution remains in gel capsule **32** until toothbrush **10** is ready for use. Gel capsule **32** may be fully sealed, helping the mouth care solution to remain fresh until use.

The capsule or dispenser **32** may include an active agent. Non-limiting examples of active agents which can be used include antibacterial agents, whitening agents, anti-sensitivity agents, anti-inflammatory agents, anti-attachment agents, plaque indicator agents, flavorants, sensates, breath freshening agents, gum health agents and colorants. Examples of these agents include metal ion agents (e.g., stannous ion agents, copper ion agents, zinc ion agents, silver ion agents) triclosan; triclosan monophosphate, chlorhexidine, alexidine, hexetidine, sanguinarine, benzalkonium chloride, salicylanilide, domiphen bromide, cetylpyridinium chloride, tetradecylpyridinium chloride, N-tetradecyl-4-ethylpyridinium chloride (TDEPC), octenidine, delmopinol, octapinol, nisin, essential oils, furanones, bacteriocins, flavans, flavinoids, folic acids, vitamins, minerals, hydrogen peroxide, urea peroxide, sodium percarbonate, PVP-H2O2, polymer-bound perxoxides, potassium nitrates, occluding agents, bioactive glass, arginine salts, arginine bicarbonate, bacalin, polyphenols, ethyl pyruvate, guanidinoethyl disulfide, tartar control agents, anti-stain ingredients, phosphate salts, polyvinylphosphonic acid, PVM/MA copolymers; enzymes, glucose oxidase, papain, ficin, ethyl lauroyl arginate, menthol, carvone, and anethole, various flavoring aldehydes, esters, and alcohols, spearmint oils, peppermint oil, wintergreen oil, sassafras oil, clove oil, sage oil, eucalyptus oil, marjoram oil, cinnamon oil, lemon oil, lime oil, grapefruit oil, and/or orange oil.

The active agent may be compatible with toothpaste, or may be unstable and/or reactive with typical toothpaste ingredients. The active agent also may be a tooth cleaning agent to boost the overall efficacy of brushing.

The active agent can be provided in any suitable vehicle, such as in aqueous solution or in the form of gel or paste. The vehicle can have a variety of different visual aesthetics including clear solution or gel or opaque solution or gel. Non-limiting examples of vehicles include water, monohydric alcohols such as ethanol, poly(ethylene oxides) such as polyethylene glycols such as PEG 2M, 5M, 7M, 14M, 23M, 45M, and 90M available from Union Carbide, carboxymethylene polymers such as Carbopol® 934 and 974 available from B.F. Goodrich, and combinations thereof. The selection of a suitable vehicle will be apparent to persons skilled in the art depending on such factors as the properties of the active agent and the desired properties of the medium, such as viscosity.

In use, gel capsule **32** would be pressed against the teeth and burst or rupture or dissolve, applying the mouth care solution over cleaning elements **26**. The user then may brush their teeth with toothbrush **10**. The user may also use toothpick **16** to clean between teeth, either before or after brushing. After the user has used toothbrush **10**, one may, but not necessarily, then easily and economically dispose of toothbrush **10**.

In some embodiments, the entire structure of toothbrush **10**, including head **12**, handle **14**, and toothpick **16**, may be molded as one integral structure, using a conventional two-component injection molding operation typically used in the manufacture of toothbrushes. This enables toothbrush **10** to be economically and quickly manufactured. Although toothbrush **10** may have a variety of sizes and dimensions, it is preferred that toothbrush **10** have a small profile, with head **12** being small enough to cover one tooth at a time and handle

being thinner than conventional, everyday toothbrush handles. Toothbrush **10** is thus readily portable or space saving.

The toothbrush **10** may provide many benefits, including the cosmetic benefits of brushing one's teeth in a form that can be used when one is away from home, and away from a water supply. The cosmetic benefits achieved by the toothbrush **10** include the cleaning of debris between teeth with toothpick **16**, broad tooth surface cleaning (particularly the front teeth) with cleaning elements **26** and the mouth care solution of gel capsule **32**, and breath freshening with the mouth care solution of gel capsule **32**.

In addition to the cosmetic benefits, the toothbrush **10** may also provide economic benefits in the form of an inexpensive toothbrush that is both quickly and economically manufactured. Toothbrush **10** also provides a mechanism for maintaining oral health, without the need for toothpaste, water, mouth wash, and containers to hold the same. Thus, toothbrush **10** is also very convenient to use.

Furthermore, the toothbrush **10** provides at least one benefit of preventing the spread of waterborne diseases. For example, the toothbrush **10** eliminates the conventional practice of using local water to mix with toothpaste. This feature is useful for military applications where there is a limited source of potable water or a need to conserve water or maintain the oral health of troops, such as in desert fighting environments. In another situation, the toothbrush is useful in outdoor camping environments to prevent disease or sickness from waterborne bacteria.

Although FIGS. **1-4** illustrate a manually-operated, disposable toothbrush, the features herein may also be practiced where the head includes one or more power or electrically operated movable sections carrying cleaning elements. Such movable section may oscillate in a rotational manner or may oscillate linearly in a longitudinal direction with respect to the longitudinal axis of the head or may oscillate linearly in a lateral or transverse direction with respect to the longitudinal axis of the head. The movable section may oscillate in and out in a direction toward and away from the outer surface of the head. The movable section may rock back and forth with respect to the outer surface of the head. The movable section may rotate continuously in the same direction, rather than oscillate. Any suitable drive mechanism may be used for imparting the desired motion to the movable section. Where plural movable sections are used, all of the movable sections may have the same type and direction of movement, or combinations of different movements may be used.

In some embodiments, the cleaning elements may be in the form of bristles made from conventional materials, such as nylon, as well as from a combination of materials so as to provide the proper stiffness in an economical manner. For example, the cleaning elements could be made of a flexible resilient material, such as TPE and a lesser expensive material such as LLDPE (linear low density polyethylene) or EVA (ethylene vinyl acetate) or a TPE. The cleaning elements could be made of a blend of TPE and either LLDPE, EVA, or polypropylene. Preferably, the two materials are combined to provide a stiffness of less than 600 MPa. The blend of materials would give the properties of conventional nylon bristles, while offering reduced costs. For example, there would be lower manufacturing costs by injection molding instead of conventional bristle tufting. Alternatively the resilient material could be a single material, such as hard TPE (i.e. Shore A 80 hardness), straight LLDPE or straight EVA.

The cleaning elements may be of any desired shape. For example, the cleaning elements could be of cylindrical shape having a uniform diameter throughout their length. Alternatively, the cleaning elements could taper from the root of each cleaning element where it extends from head **12** to its outer cleaning end. Since a preferred practice of the invention is to provide a small lightweight toothbrush the dimensions of the various components of toothbrush **10** are preferably small. Thus, for example, each cleaning elements may extend outwardly from the outer surface of cleaning block **22** a distance no greater than 10 mm and preferably no greater than 8 mm and most preferably no greater than 6 mm. Where tapered cleaning elements are used the root diameter should be no greater than 1.5 mm, preferably no greater than 1 mm, most preferably no greater than 0.7 mm or no greater than 0.5 mm or no greater than 0.3 mm. The diameter could then decrease in size to no greater than 0.2 mm at a distance of no greater than 6 mm from the base of the cleaning element. The taper relationship of diameter at a distance location above the root diameter could be a range of no greater than 1 mm at a distance of no greater than 10 mm, preferably no greater than 0.6 mm at a distance of no greater than 8 mm, most preferably no greater than 0.2 mm at a distance of no greater than 6 mm. Preferably, the length of the entire toothbrush **10** is no greater than 5 inches, preferably no greater than 4 inches, and more preferably no greater than 3.75 or 3 or 2.50 inches, and may be in the range of 2 to 4 inches.

As illustrated in FIGS. **1** and **4** the cleaning elements define a cleaning field in the head and the dispenser **32** is mounted within this cleaning field. The cleaning elements **26** preferably extend outwardly from the cleaning block **22** to be approximately flush with the outer surface of the gel bead or capsule **32**, as shown in FIG. **4**. The features herein, however, can also be practiced where the cleaning elements extend either a greater distance or a lesser distance than the dispenser **32** as shown in FIG. **14**. Since toothbrush **10** is intended to be both small and lightweight, it is preferred that toothbrush **10** weigh no more than 3 grams. The small size is such that it can be held completely within the palm of an adult user. Head **12** is of a size that it would correspond to the size of an individual tooth or an individual tooth and the interproximal areas. Head **12** could be made of any suitable shape and is preferably of circular or oval shape having a maximum lateral dimension or diameter of no greater than 13 mm, preferably no greater than 12 mm and most preferably no greater than 11 mm. Where head **12** is of non-circular shape its maximum lateral dimension is 14 mm.

As shown in FIG. **2** head **12** may be at an angle between 0° and 90° to the longitudinal axis of handle **14**. The preferred angle is from 20° to 70° and more preferably from 30° to 60°. The cleaning elements could be perpendicular to the outer surface of head **12** or could also be at an angle to the outer surface such as in the range of 60° to 90° or in the range of 75° to 90°.

In one embodiment, the cleaning elements could be hollow, such as hollow bristles, which are capable of absorbing a medicament by capillary action. Such a feature would be particularly useful for children where a medicament or some form of flavor could be dispensed from the hollow cleaning elements. It is also possible to leach antibacterial material from the cleaning elements. In one embodiment where the cleaning elements are used to dispense oral care materials the cleaning elements themselves may be considered as the oral care dispensers without requiring additional dispensers such as capsule **32**.

Where specific parameters and characteristics have been given for cleaning elements, the features herein could be practiced where other cleaning elements do not include those parameters and characteristics.

FIGS. **5-6** show other variations wherein the cleaning elements are in the form of a single mass having an irregular outer surface. As shown in FIG. **5** the mass **34** is similar to that of "steel wool" as used in household cleaning or could be part of VELCRO, formations, such as hooks or loops.

FIG. **6** shows a variation where the cleaning element **36** is of a single mass of foam for cotton which could be used as a swab for oral care material. The outer surface of the swab could be generally planar or could have surface irregularities. In such practice of the invention the cleaning element **36** could be impregnated with the oral care material or could be dipped into oral care material so as to absorb the material and thereby the cleaning element **36** would also function as the oral care dispenser. Such swab type cleaning elements are gentle for children, particularly infants.

The features herein could be practiced where the various components of the toothbrush **10** are segmented for manufacturing and assembly purposes. Such segmented components could also be detachably connected together so as to permit the interchangeability of the components thereby providing the possibility for the substitution of different components in the combination. Thus, the head **12** could be detachably connected to the handle **14**. FIG. **7**, for example, illustrates head **12** to be detachably mounted to handle **14** by a snap fitting **38** which may be of any suitable construction as is known to those of ordinary skill in the art.

The concept of a detachable interconnection may also be used wherein the dispenser **32** is detachably mounted in the head **12** or wherein the oral care accessory, such as toothpick **16**, is detachably mounted to handle **14**. Thus, as later described with respect to FIGS. **12** and **13** the toothbrush and its various components could be packaged wherein the same package includes a plurality of toothbrushes and/or a plurality of different components such as heads, dispensers or accessories.

FIG. **8** shows a further embodiment wherein a piezoelectric crystal **40** is provided in the handle **14** at the junction with head **12** so as to cause the head **12** to vibrate during use. Alternatively the head **12** could be mounted to a rotatable shaft extending from the handle and having an eccentric weight on the shaft to cause the head to vibrate.

Although FIGS. **1-3** illustrate an oral care accessory **16** in the form of a toothpick, other types of accessories **42** could be used as schematically shown in FIG. **9**. As illustrated therein such accessory **42** would be mounted to the end of handle **14** similar to the mounting of toothpick **16**. Such mounting could be detachable or of a permanent nature. Examples of such oral care accessories include tongue cleaners, floss holders or an interproximal brush. Similarly, the accessory could be of a swab or foam type similar to the cleaning element **36** of FIG. **6** or could be of the single mass of roughened material such as the cleaning element **34** of FIG. **5**.

FIG. **10** shows another variation wherein the toothbrush is particularly adapted for use by children. Such use is enhanced by providing any suitable ornament or caricature **44** on the toothbrush, such as on the handle or on any other suitable location including the backside of the head. Such ornament **44** could be detachably mounted so that it could be kept by the child after the rest of the toothbrush is thrown away. Other aspects of the invention which make it desirable for use by children include the possibilities of dispensing various types of oral care materials including materials having special flavors, tooth numbing materials, anti-sensitive materials or various medicaments.

The toothbrush could also be made of various colors for different parts of the toothbrush. For example, soft elastomer **18** could be made of a different, such as a contrasting, color with respect to the remainder of handle **14** which would be made of a rigid material. Similarly, the head **12** could be made of a different color than the rigid portion of the handle and/or the soft elastomer portions **18**. The cleaning elements **26** could be made of distinct colors and the dispenser **32** could also be made of a distinct color. Along the same lines the accessory such as toothpick **16** or other accessory **42** could be made of a distinct color. These various colors could be contrasting or complementary with each other. Thus, for example, the various colors could differ only slightly in color or shade.

FIG. **11** illustrates another embodiment wherein the handle **14** has a hollow chamber **46** in which the oral care material could be contained. Chamber **46** leads to a passageway **48** which extends to the head **12** such as terminating in a plurality of branches **49** at the outer surface of head **12** within the cleaning field. In order to dispense the oral care material located in the chamber or reservoir **46** handle **14** would have sufficient resiliency so that it can be squeezed thereby forcing the material from the handle to the head into a dispensing cavity or one or more dispensing openings.

FIGS. **15** and **16** illustrate a head **60** according to another embodiment, the head **60** having an outer surface **62**, a plurality of cleaning elements **64** extending from a portion of the outer surface **62**, and a raised socket **68** extending from another portion of the outer surface **62**. The socket **68** may be formed from the same material as the outer surface **62**, and can be integrally formed with the outer surface such as by molding or the like. The socket **68** extends outwardly relative to the outer surface **62** by an upstanding wall **69**, and includes a seat to accommodate an oral care dispenser such as a bead or capsule **70** as discussed herein. The raised socket **68** positions the dispenser **70** closer to the edges of the cleaning elements **64** to facilitate contact between the dispenser **70** and the user's teeth and to encourage rupturing of the dispenser **70** early in the brushing process. The socket may also position the dispenser **70** beyond the cleaning elements **64** as discussed above, which would encourage even greater and immediate contact with the user's teeth.

The cleaning elements **64** may comprise a variety of configurations as discussed above, such as a circular configuration as shown in FIG. **1**. FIG. **16** illustrates an example of an oval configuration, wherein the cleaning elements **64** are arranged in a plurality of concentric rings **65***a*, **65***b*, **65***c*, surrounding the socket **68**. One of such rings is a partial ring comprised of partial ring sections **65***d*, **65***e* defined along the upper and lower edges **61**, **63** of the outer surface **62** of the head **60**, which sections **65***d*, **65***e* comprise the equivalent of a so-called power tip that is designed to provide a cleaning edge that extends beyond the majority of the field of cleaning elements for increased efficacy.

Any suitable oral care products could be dispensed from the dispenser. Such products include, but are not limited to the gel capsule **32** as previously described and could contain toothpaste, tooth powder or could be a small vial of mouthwash having a gel, a powder or a liquid. Such a vial could be separately included in a package containing the toothbrush. The materials could be flavored and could be provided in sets of different flavors and/or different characteristics such as medicaments, numbing materials, etc.

Where the dispensers **32** are in the form of beads, different beads or capsules could be used with different colors/flavors to enhance consumer appeal. As described the capsule **32** could be an impregnated bead that burst. Suitable beads include those supplied by Mane Inc.

Any suitable methods may be used for forming toothbrush **10** and its various components. For example, multi-compo-

nent injection molding could be used to integrally couple various components such as the cleaning elements and the head and/or the handle. This could be done in an automated or multiple step process. The handle could be rotocast blow molded to form a hollow squeeze handle that would be usable in the embodiment shown in FIG. **11**.

FIGS. **12-13** show different manners of packaging toothbrushes in accordance with this invention. As shown in FIG. **12**, for example, a single package **50** could contain a plurality of toothbrushes **10** all of which could be the same or could differ from each other. The package **50** could be of any conventional construction, such as a blister pack, which might include a hole **52** to permit the package to be hung for display purposes.

FIG. **13** illustrates a variation wherein the package **54** includes one or more toothbrushes **10** and a plurality of other components **56** which could be accessories or dispensers or other components. The components could include a small vial of mouthwash. Preferably, the package **50** or **54** would be hermetically sealed to assure freshness. Such hermetic sealing is particularly desired to prevent moisture from reaching gel capsule **32** and causing the capsule to burst.

As is apparent the features herein provide an oral care toothbrush that may be small in size and portable and can be conveniently used away from home under circumstances, such as travel, where water is not readily available.

The features herein could be practiced with a combination of various components that do not involve "toothbrush" usage. In that sense these features may be used in any oral care device or the like, rather than strictly being a toothbrush. Where used as a toothbrush or the like, the features herein may have the advantages, because of the size and configuration, to allow discreet hygienic use, such as no fingers in the mouth, adapting it to be readily used in public areas.

FIG. **17** illustrates another variation in which the head or carrier **80** may have an oval shape, and which may have a series of retaining members **81**, such as prongs or biasing members, to hold an oral care dispenser, such as a bead of packed dentifrice or capsule (not shown in the figure), in place prior to use. The retaining members **81** may help retain the bead or capsule at a higher elevation with respect to the field of oral care elements (e.g., bristles **26**), to expose more surface area of the bead, dispenser or capsule **32** to the user's saliva to improve the "mouth-feel" and expedite the dissolving of the bead, dispenser or capsule. As illustrated, the retaining members **81** may retain the bead, dispenser or capsule beneath the distal ends of the bristles **26**, so as to keep the bead, dispenser or capsule submerged within the field of bristles **26**, such that the bristles extend beyond the bead, dispenser or capsule at the bristles' distal ends.

The retaining members **81** may be made of the same material as the bristles **26**, or alternatively they may be made of a different material having greater rigidity than the bristles. In one construction, the retaining members **81** may be made of the same material as elastomer portions **18**.

The number of retaining members **81** used may vary depending on the type of bead or capsule, and the amount of retention force assistance. As illustrated in FIG. **18**, four retaining members **81** may be used at four cardinal points around the perimeter of the bead or capsule. Greater or fewer retaining members **81** may be used. For example, some embodiments might use three retaining members **81** at triangular points around the perimeter, while other embodiments might use five, six, or more prongs around the perimeter. The retaining members **81** may be positioned such that the bead or capsule is held in a centered position with respect to the bristles **26**.

As also shown in FIG. **18**, the bristles **26** may vary in diameter at their proximate ends, so that bristles in different areas of the field have different thicknesses and rigidity or axial stiffness as measured from the longitudinal axis of the bristle. In such a construction, inner or central region bristles **26***b* are stiffer than the outer or peripheral region bristles **26***c*. The bristles **26** of the carrier **80** may taper towards their distal ends, as seen in FIG. **17**.

With reference to FIG. **18**, the variable stiffness arrangement of the field of bristles **26** forms a structure for incremental radial flow control of oral care solution/material during a brushing operation for efficient cleaning. This feature is particularly useful for low viscosity oral care solutions released from the dispenser **32**. Nevertheless, oral care solutions of higher viscosity can be used in the carrier **80**. The bristles surrounding retaining members **81** are independently flexible. In this regard, during a brushing operation, the free ends (e.g., tip) of the stiffer bristles **26***b* bend relative to their, respective vertical axis less than the outer bristles **26***c* (e.g., bristles near the periphery). Hence, a portion of the dentifrice stays longer in the central region of the brush head by reduced dynamic bending or action of the stiffer bristles. The sweeping or oscillating motion of the carrier **80** transfers a portion of the retained liquid to the outer region of the carrier **80**. While the outer bristles **26***c* are less stiff, the dynamic bending relative to their vertical axis additionally causes the outer bristles to receive a portion of the dentifrice from the central region of the carrier **80**. In this construction, effective cleaning of the tissue surfaces in the mouth may be obtained though the combined use of the variable stiffness bristle field mechanically scrubbing the tissue surfaces and the beneficial effects of applying the oral care material from the dispenser in the oral cavity. In this way, the bristles field provides a limited and controlled flow of the dentifrice or other oral care material to the outer bristles and maintains sufficient flexibility to provide greater user comfort and improved cleaning of the oral tissues.

With reference to FIGS. **17-20**, in one construction, a basin, or cavity **100** is provided in carrier **80** below the dispenser **32**. As can as seen in FIGS. **18** and **19**, basin **100** can be a concaved structure or hemispherical structure disposed in the interior area, beneath and between the retaining members **81**. While a concaved structure is shown, other shapes for the basin **100** are possible, such as a triangular prism, a square prism or a rectangular prism. The basin **100** serves to retain a portion of the oral care material from the dispenser **32** to extend the beneficial cleaning effects of the oral care material during brushing. In this regard, the sweeping or oscillating motion of the carrier **80** transfers a portion of the retained liquid to inner region bristles **26***b* of the carrier **80**.

In one construction, the retaining members **81** are columnar-like structures that extend upwardly from the carrier **80**. The retaining members **81** may curve inwardly to further assist in holding the bead or capsule in place. FIG. **19** illustrates a close-up cross-sectional view, showing such curved retaining members **81**. Such curved retaining members **81** may have a length that extends more than halfway up (or down, depending on angle of view) the diameter of the bead or capsule **32** for retention. Hence, a length portion of the retaining members may be acutely disposed with respect to a vertical axis of the carrier **80** for retention. The combination of retaining members **81** provides a compressive force to hold the dispenser **32** in place. The inwardly disposed engaging surface **85** is generally smooth to reliably resist prematurely rupturing the dispenser **32** before use. (See FIG. **17**) Also, the smooth and curved characteristic of engaging surface **85** provides for a generally uniform distribution of pressure on the

surface of the dispenser **32**. This construction thus reduces thin wall stress on the surface of the dispenser **32** to reliably resist prematurely rupturing the dispenser **32** before use. For example, shock forces acting on the toothbrush can be dissipated during transport operations.

The retaining members **81** may assist in rupturing the bead or capsule during brushing, and may have a flat surface at a distal end **82** to form a corner edge **83** against the bead or capsule for this purpose. With reference to FIGS. **17** and **19**, some of the bristles **26** may extend from the retaining members **81**. In this construction, a portion of the base of the bristle extends from a rear/back of the retaining member **81**. This provides a compact space-saving head structure and also provides flow control benefits of the oral care material in the bristle field.

As illustrated in FIG. **19**, the block **22** may be made of the same material as some or all of the bristles **26**, as discussed above, which may be a different material from other portions of the handle. Alternatively, the handle and block may be made of the same material, with the bristles **26** being made of a different material.

FIG. **20** illustrates a cross-sectional view of a toothbrush having the head or carrier structure shown in FIGS. **17-19**. The carrier **80** may be angled at a 10° angle with respect to the handle, representing a less-angled head than that shown in previous figures. An angle ranging from 8° to 12° may assist in improving a user's brushing technique. As with FIG. **19**, FIG. **20** also shows an example arrangement of materials, where the block **22** may be made of the same materials as some or all of the bristles **26** and portions of the handle. Alternatively, the handle may be made of the same material as the block **22** and/or bristles **26**.

Hence, in some embodiments, an oral care implement may include a rupturable dispenser with a dentifrice, as a connected unit or the various other combinations of components and materials as described. A toothbrush may have a toothpick which enables cleaning between the teeth. A dispenser containing a dentifrice or other oral care material can be connected in the bristle or cleaning element portion of the toothbrush for dispensing the dentifrice to the teeth to provide teeth cleaning and breath freshening or other oral care benefits to a user. In one construction, the oral care elements are configured to slow a radial flow of the oral care material released from the dispenser near an interior region of the carrier and increase a radial flow of the oral care material away from the interior region.

Other embodiments will be apparent to those skilled in the art from consideration of the specification disclosed herein. It is intended that the specification and examples be considered as exemplary only, with the true scope and spirit of the invention being indicated by the following claims.

We claim:

1. An oral care implement, comprising:

a handle;

a carrier at an end of the handle, the carrier comprising a front surface and a back surface;

a cleaning block on the carrier, the cleaning block extending through the carrier and comprising a portion exposed on the front surface of the carrier and a portion exposed on the back surface of the carrier;

a gel on the cleaning block;

a plurality of retaining members extending outwardly from the cleaning block; wherein the retaining members are in contact with the gel; and

oral care elements extending from the cleaning block and surrounding the retaining members, wherein the oral care elements extend outwardly from the cleaning block for a first distance, the retaining members extend from the cleaning block a second distance that is less than the first distance.

2. The oral care implement of claim **1**, wherein at least one of the oral elements extends from one of the retaining members.

3. The oral care implement of claim **1**, wherein the oral care elements comprise a first set of elements proximate to the gel and a second set of elements surrounding the first set of elements.

4. The oral care implement of claim **1**, wherein the retaining members have an arcuate shape with respect to a vertical axis extending from the carrier.

5. The oral care implement of claim **1**, further comprising an oral care dispenser for holding the gel, the oral care dispenser retained by the retaining members.

6. The oral care implement of claim **1**, wherein the carrier includes a basin below the retaining members.

7. The oral care implement of claim **1**, wherein a portion of each of the retaining members is acutely disposed with respect to a vertical axis of the carrier.

8. The oral care implement of claim **1**, wherein the oral care elements and the retaining members are the formed of the same material.

9. The oral care implement of claim **1**, wherein the oral care elements comprise a first subset of elements having a first proximal end diameter and a second subset of elements having a second proximal end diameter that is different from the first proximal end diameter.

10. The oral care implement of claim **1**, wherein the carrier is placed at an acute angle to the longitudinal axis facing away from the handle, the acute angle ranging from about eight to ten degrees with respect to the handle.

11. The oral care implement of claim **1**, wherein the oral care elements are configured to slow a radial flow of oral care material released from the dispenser near an interior region of the carrier and increase a radial flow of the oral care material away from the interior region.

12. An oral care implement, comprising:

a handle having a carrier comprising a front surface and a back surface;

a cleaning block on the carrier, the cleaning block extending through the carrier and comprising a portion exposed on the front surface of the carrier and a portion exposed on the back surface of the carrier;

oral care elements extending from the cleaning block; and

a plurality of members extending outwardly from the cleaning block, wherein the members contact an oral care material in the carrier,

the cleaning block and the oral care elements are formed of the same material.

13. The oral care implement of claim **12**, wherein said oral care elements are bristles.

14. The oral care implement of claim **13**, wherein the members are surrounded by said bristles.

15. The oral care implement of claim **12**, further comprising an oral care dispenser for holding the oral care material, the oral care dispenser held in place by the members.

16. The oral care implement of claim **15**, wherein the oral care dispenser comprises a rupturable capsule.

17. The oral care implement of claim **15**, wherein the members are curved inward toward the oral care dispenser.

18. The oral care implement of claim **17**, wherein the members have generally smooth engaging surfaces for holding the oral care dispenser.

19. The oral care implement of claim **15**, wherein the oral care elements comprise a first set of elements proximate to the

oral care dispenser and as second set of elements surrounding the first set of elements, at least one of the elements of the first set having a different stiffness from at least one of the elements of the second set.

20. The oral care implement of claim **12**, wherein the oral care elements are configured to control a radial flow of oral care material.

21. The oral care implement of claim **12**, wherein the oral care elements and said members are comprised of the same material.

22. The oral care implement of claim **12**, further comprising a cavity in the carrier to accommodate placement of an oral care dispenser for holding the oral care material.

23. The oral care implement of claim **12**, wherein the members are positioned to hold the oral care material in a generally centered position with respect to the oral care elements.

24. The oral care implement of claim **12**, wherein a first subset of said oral care elements has a different proximal end diameter from the proximal end diameters of a second subset of said oral care elements.

25. The oral care implement of claim **12**, wherein said oral care elements are tapered bristles having a larger diameter at their proximal ends than their distal ends.

* * * * *