BLUETOOTH DOC	Date / Year-Month-Day	Approved	Revision	Document No
	2003-05-22	Version	1.0	
Prepared	e-mail address			N.B.
Bluetooth Audio Video Working Group	avv-feedback@bluetooth.org			

AUDIO/VIDEO REMOTE CONTROL PROFILE

Version 1.0 Adopted

Abstract

This profile defines the requirements for Bluetooth™ devices necessary for the support of the Audio/Video

Exhibit 1005
Hewlett Packard Enterprise Company v. Sovereign Peak Ventures, LLC

Remote Control usage case. The requirements are expressed in terms of end-user services, and by defining the features and procedures that are required for interoperability between Bluetooth devices in the Audio/Video Remote Control usage case.

Exhibit 1005
Hewlett Packard Enterprise Company v. Sovereign Peak Ventures, LLC

Revision History

Revision	Date	Comments
0.5	April 2001	Release to Associates
0.7	June, 2001	Release to Associates
0.9	September, 2001	Release to Associates and Early Adopters
Voting Draft 0.95	October, 2001	Release to Associates and Early Adopters
Voting Draft 0.95 a	February 11, 2002	Release to Associates and Early Adopters, small clarifications based on IOP and feedback.
0.95b	March 2002	Adopted 0.95
Voting Draft 1.00	May 2002	Release for Voting Draft
Voting Draft 1.00 a	February 2003	Release for Voting Draft
Version 1.0	May 2003	Title and header changed

Exhibit 1005
Hewlett Packard Enterprise Company v. Sovereign Peak Ventures, LLC

Contributors

Morgan Lindqvist	Ericsson
Tsuyoshi Okada	Matsushita
Jurgen Schnitzler	Nokia
Kalervo Kontola	Nokia
Vesa Lunden	Nokia
Shaun Barrett	Philips
Christian Bouffioux	Philips
Geert Knapen	Philips
Emmanuel Mellery	Philips
Masakazu Hattori	Sony
Harumi Kawamura (Owner)	Sony
Rudiger Mosig	Sony
Yoshiyuki Nezu	Sony
Hiroyasu Noguchi	Sony
Tomoko Tanaka	Sony
Junko Ami	Toshiba
Yoshiaki Takabatake	Toshiba
Ichiro Tomoda	Toshiba

Exhibit 1005
Hewlett Packard Enterprise Company v. Sovereign Peak Ventures, LLC

Disclaimer and Copyright Notice

The copyright in these specifications is owned by the Promoter Members of Bluetooth SIG, Inc. (“Bluetooth SIG”). Use of these specifications and any related intellectual property (collectively, the “Specification”), is governed by the Promoters Membership Agreement among the Promoter Members and Bluetooth SIG (the “Promoters Agreement”), certain membership agreements between Bluetooth SIG and its Adopter and Associate Members (the Membership Agreements”) and the Bluetooth Specification Early Adopters Agreements (“1.2 Early Adopters Agreements”) among Early Adopter members of the unincorporated Bluetooth special interest group and the Promoter Members (the “Early Adopters Agreement”). Certain rights and obligations of the Promoter Members under the Early Adopters Agreements have been assigned to Bluetooth SIG by the Promoter Members.

Use of the Specification by anyone who is not a member of Bluetooth SIG or a party to an Early Adopters Agreement (each such person or party, a “Member”), is prohibited. The legal rights and obligations of each Member are governed by their applicable Membership Agreement, Early Adopters Agreement or Promoters Agreement. No license, express or implied, by estoppel or otherwise, to any intellectual property rights are granted herein.

Any use of the Specification not in compliance with the terms of the applicable Membership Agreement, Early Adopters Agreement or Promoters Agreement is prohibited and any such prohibited use may result in termination of the applicable Membership Agreement or Early Adopters Agreement and other liability permitted by the applicable agreement or by applicable law to Bluetooth SIG or any of its members for patent, copyright and/or trademark infringement.

THE SPECIFICATION IS PROVIDED “AS IS” WITH NO WARRANTIES WHATSOEVER, INCLUDING ANY WARRANTY OF MERCHANTABILITY, NONINFRINGEMENT, FITNESS FOR ANY PARTICULAR PURPOSE, SATISFACTORY QUALITY, OR REASONABLE SKILL OR CARE, OR ANY WARRANTY ARISING OUT OF ANY COURSE OF DEALING, USAGE, TRADE PRACTICE, PROPOSAL, SPECIFICATION OR SAMPLE.

Each Member hereby acknowledges that products equipped with the Bluetooth™ technology (“Bluetooth™ Products”) may be subject to various regulatory controls under the laws and regulations of various governments worldwide. Such laws and regulatory controls may govern, among other things, the combi-nation, operation, use, implementation and distribution of Bluetooth™ Products. Examples of such laws and regulatory controls include, but are not limited to, airline regulatory controls, telecommunications regulations, technology transfer controls and health and safety regulations. Each Member is solely responsible for the compliance by their Bluetooth™ Products with any such laws and regulations and for obtaining any and all required authorizations, permits, or licenses for their Bluetooth™ Products related to such regulations within the applicable jurisdictions. Each Member acknowledges that nothing in the Specification provides any information or assistance in connection with securing such compliance, authorizations or licenses. NOTHING IN THE SPECIFICATION CREATES ANY WARRANTIES, EITHER EXPRESS OR IMPLIED, REGARDING SUCH LAWS OR REGULATIONS.

ALL LIABILITY, INCLUDING LIABILITY FOR INFRINGEMENT OF ANY INTELLECTUAL PROPERTY RIGHTS OR FOR NONCOMPLIANCE WITH LAWS, RELATING TO USE OF THE SPECIFICATION IS EXPRESSLY DISCLAIMED. BY USE OF THE SPECIFICATION, EACH MEMBER EXPRESSLY WAIVES ANY CLAIM AGAINST BLUETOOTH SIG AND ITS PROMOTER MEMBERS RELATED TO USE OF THE SPECIFICATION.

Bluetooth SIG reserves the right to adopt any changes or alterations to the Specification as it deems necessary or appropriate and to adopt a process for adding new Bluetooth™ profiles after the release of the Specification.

Copyright © 2003, Bluetooth SIG Inc

Release Date: 22 May 2003

Exhibit 1005
Hewlett Packard Enterprise Company v. Sovereign Peak Ventures, LLC

Document Terminology

The Bluetooth SIG has adopted Section 13.1 of the IEEE Standards Style Manual, which dictates use of the words ``shall'', ``should'', ``may'', and ``can'' in the development of documentation, as follows:

- The word *shall* is used to indicate mandatory requirements strictly to be followed in order to conform to the standard and from which no deviation is permitted (*shall* equals *is required to*).

- The use of the word *must* is deprecated and shall not be used when stating mandatory requirements; *must* is used only to describe unavoidable situations.

- The use of the word *will* is deprecated and shall not be used when stating mandatory requirements; *will* is only used in statements of fact.

- The word *should* is used to indicate that among several possibilities one is recommended as particularly suitable, without mentioning or excluding others; or that a certain course of action is preferred but not necessarily required; or that (in the negative form) a certain course of action is deprecated but not prohibited (*should* equals *is recommended that*).

- The word *may* is used to indicate a course of action permissible within the limits of the standard (*may* equals *is permitted*).

- The word *can* is used for statements of possibility and capability, whether material, physical, or causal (*can* equals *is able to*).

Exhibit 1005
Hewlett Packard Enterprise Company v. Sovereign Peak Ventures, LLC

Contents

1 Introduction 10
1.1 Scope 10
1.2 Profile Dependencies 10
1.3 Symbols and Conventions 11
1.3.1 Requirement Status Symbols 11
1.3.2 Definition 12
1.3.3 Conventions 12
1.3.4 Notation for Timers 14

2 Profile Overview 15
2.1 Profile Stack 15
2.2 Configuration and Roles 15
2.3 User Requirements 16
2.3.1 Scenarios 16
2.3.2 User Expectations 18
2.4 Profile Fundamentals 19
2.5 Conformance 20

3 Application Layer 21
3.1 Feature Support 21
3.2 Feature Mapping 21

4 Control Interoperability Requirements 22
4.1 Procedure 22
4.1.1 Connection for Control 22
4.1.2 Release Connection for Control 23
4.1.3 Procedure of AV/C Command 23
4.1.4 AV/C Command Operation 24
4.2 AVCTP Interoperability Requirements 25
4.2.1 Transaction Labels 25
4.2.2 Message Fragmentation 26
4.2.3 Profile Identifier of AVCTP Message Information 26
4.3 AV/C Command and Response 26
4.3.1 AV/C Transaction Rules 26
4.3.2 AV/C Command Frame 27
4.3.3 AV/C Response Frame 27
4.3.4 AV/C Frame Fields 28
4.4 Supported Unit Commands 28
4.4.1 UNIT INFO Command 28
4.4.2 SUBUNIT INFO Command 29

Exhibit 1005
Hewlett Packard Enterprise Company v. Sovereign Peak Ventures, LLC

4.5 Supported Common Unit and Subunit Commands 29
4.5.1 VENDOR DEPENDENT Command 29
4.6 Supported Subunit Command 29
4.6.1 PASS THROUGH Command 30
4.7 Categories 30
4.7.1 Category 1: Player/Recorder 30
4.7.2 Category 2: Monitor/Amplifier 30
4.7.3 Category 3: Tuner 30
4.7.4 Category 4: Menu 30
4.7.5 Support Level in TG 30
4.7.6 Support Level in CT 32

5 Service Discovery Interoperability Requirements 34

6 L2CAP Interoperability Requirements 36
6.1 Channel Types 36
6.2 Signalling 36
6.3 Configuration Options 36
6.3.1 Maximum Transmission Unit 36
6.3.2 Flush Timeout 36
6.3.3 Quality of Service 37

7 Link Manager (LM) Interoperability Requirements 38

8 Link Controller (LC) Interoperability Requirements 39
8.1 Class of Device 39

9 Generic Access Profile Requirements. 40
9.1 Modes 40
9.2 Security Aspects 40
9.3 Idle Mode Procedures 40

10 Timers and Counters. 41

11 Testing 42

12 References 43

13 List of Figures 44

14 List of Tables 45

15 Appendix A (Informative): Example of Latency 46

16 Appendix B (Informative): Example of A/V Devices 47

17 Appendix C (Informative): Multiple applications use of AVCTP 48

18 Appendix D (Informative): Example of AV/C Commands and Responses 49
18.1 UNIT INFO command 49
18.2 SUBUNIT INFO command 50
18.3 PASS THROUGH command 51

Exhibit 1005
Hewlett Packard Enterprise Company v. Sovereign Peak Ventures, LLC

19 Appendix E: Acronyms and Abbreviations..... 52

Exhibit 1005
Hewlett Packard Enterprise Company v. Sovereign Peak Ventures, LLC

1 Introduction

1.1 Scope

The Audio/Video Remote Control Profile (AVRCP) defines the features and procedures required in order to ensure interoperability between Bluetooth devices with audio/video control functions in the Audio/Video distribution scenarios. This profile specifies the scope of the AV/C Digital Interface Command Set (AV/C command set, defined by the 1394 Trade Association) to be applied, and it realizes simple implementation and easy operability. This profile adopts the AV/C device model and command format for control messages, and those messages are transported by the Audio/Video Control Transport Protocol (AVCTP).

In this profile, the controller translates the detected user action to the A/V control signal, and then transmits it to a remote Bluetooth device. The functions available for a conventional infrared remote controller can be realized in this profile. The remote control described in this profile is designed specific to A/V control. Other remote control solutions using Bluetooth wireless technology may be applied for general Bluetooth devices including A/V devices.

Note that the Audio/Video Remote Control Profile does not handle the audio/video streaming. Devices that support this profile may support audio/video streaming by also implementing the Advanced Audio Distribution Profile and/or Video Distribution Profile.

Editors' Note: The A/V WG has requested additional QoS support in the next revision of the Bluetooth data link specification. When other profiles with stringent requirements are used in conjunction with this profile the performance may be degraded due to insufficient support of QoS in the current Bluetooth specification (v1.1), which all profiles use.

1.2 Profile Dependencies

In Figure 1.1, the structure and dependencies of the Audio/Video Remote Control Profile are depicted. A profile is dependent upon another profile if it re-uses parts of that profile, by implicitly or explicitly referencing it.

As indicated in the figure, the Audio/Video Remote Control Profile is dependent upon the Generic Access Profile. The details regarding the profile are provided in Section 9, Generic Access Profile Requirements.

Exhibit 1005
Hewlett Packard Enterprise Company v. Sovereign Peak Ventures, LLC

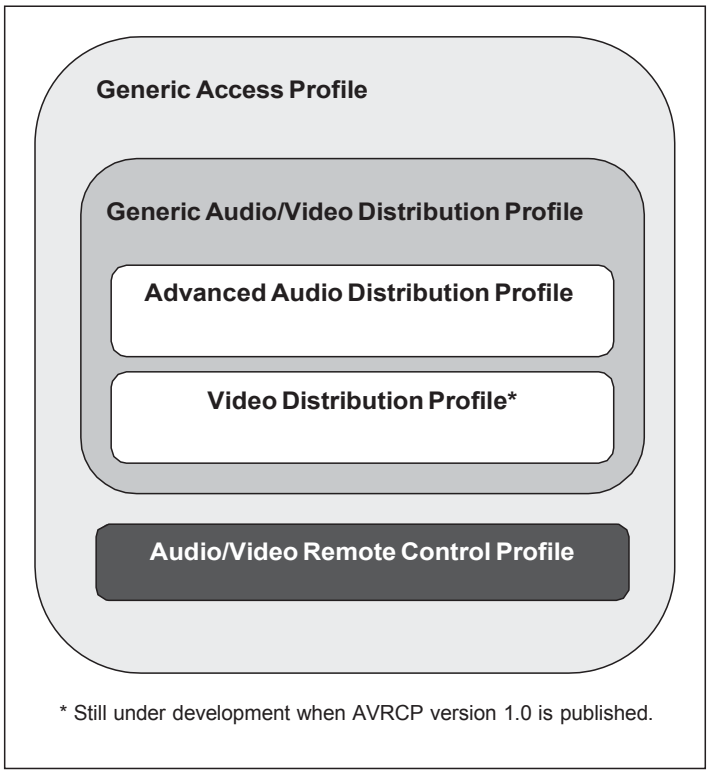

Figure 1.1: Audio/Video Remote Control Profile Dependency

1.3 Symbols and Conventions

1.3.1 Requirement Status Symbols

In this document, the following symbols are used:

‘M’ for mandatory to support (used for capabilities that shall be used in the profile).

‘O’ for optional to support (used for capabilities that may be used in the profile).

‘X’ for excluded (used for capabilities that may be supported by the unit but that shall never be used in the profile).

‘C’ for conditional to support (used for capabilities that shall be used in case a certain other capability is supported).

‘N/A’ for not applicable (in the given context it is impossible to use this capability).

Some excluded capabilities are the ones that, according to the relevant Bluetooth specification, are mandatory. These are features that may degrade the operation of devices following this profile. Even if such features exist, which can occur when the device supports different profiles, they should never be activated while the device is operating within this profile.

Exhibit 1005
Hewlett Packard Enterprise Company v. Sovereign Peak Ventures, LLC

1.3.2Definition

1.3.2.1 RFA

Reserved for Future Additions. Bits with this designation shall be set to zero. Receivers shall ignore these bits.

1.3.2.2 RFD

Reserved for Future Definition. These bit value combinations or bit values are not allowed in the current specification but may be used in future versions. The receiver shall check that unsupported bit value combination is not used.

1.3.3Conventions

In this profile, protocol signals are exchanged by initiating procedures in communicating devices and by exchanging messages. Signalling diagrams use the conventions of Figure 1.2: Signalling Conventions. Both A and B represent devices playing specific roles, as defined in Section 2.2, Configuration and Roles. Specific arrow styles are used in the diagrams to indicate the relevant procedures initiated by the participant devices and the exchanged messages.

Exhibit 1005
Hewlett Packard Enterprise Company v. Sovereign Peak Ventures, LLC

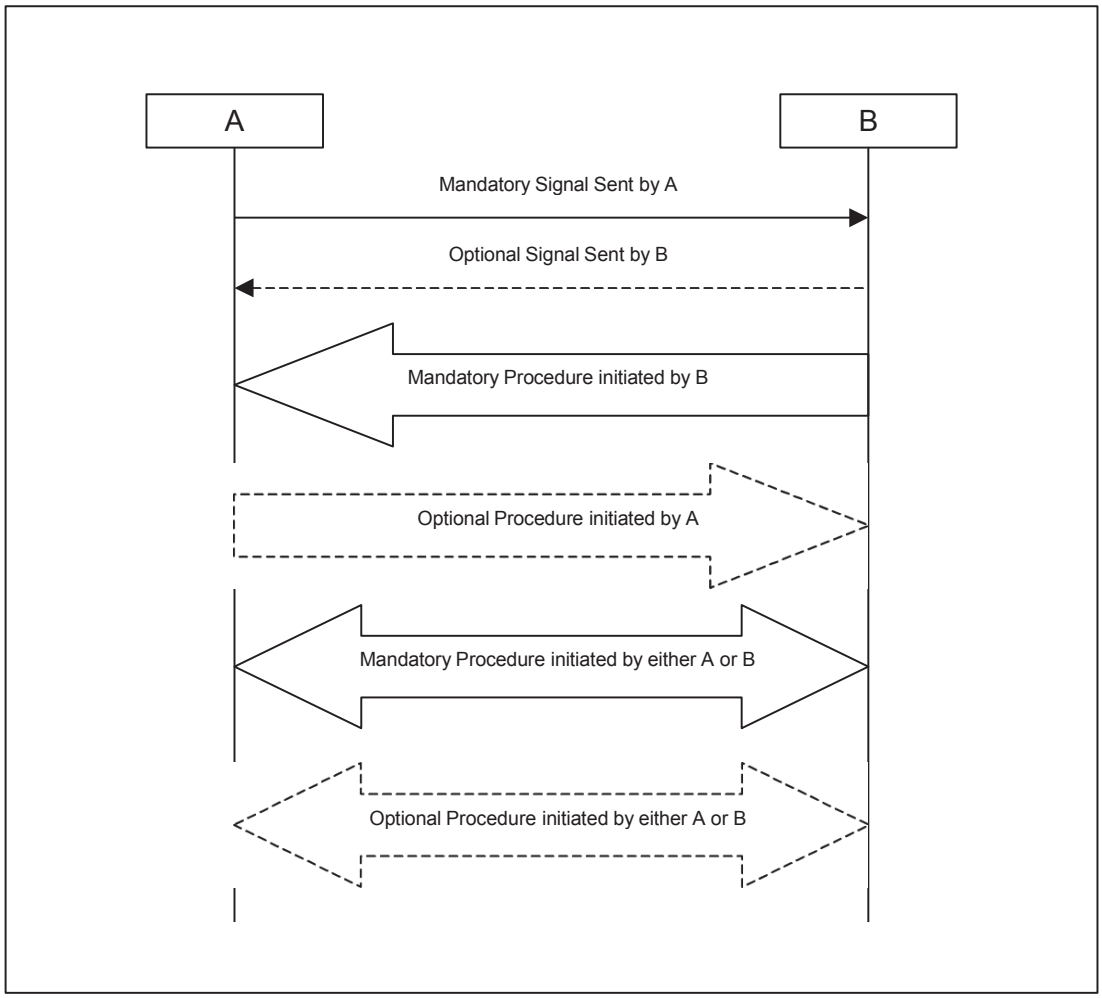

Figure 1.2: Signalling Conventions

Exhibit 1005
Hewlett Packard Enterprise Company v. Sovereign Peak Ventures, LLC

1.3.4 Notation for Timers

Timer is introduced, specific to this profile. To distinguish them from timers used in the Bluetooth protocol specifications and other profiles, these timers are named in the following format:

- "T_{RCP}(nnn)" for timers

Exhibit 1005
Hewlett Packard Enterprise Company v. Sovereign Peak Ventures, LLC

2 Profile Overview

2.1 Profile Stack

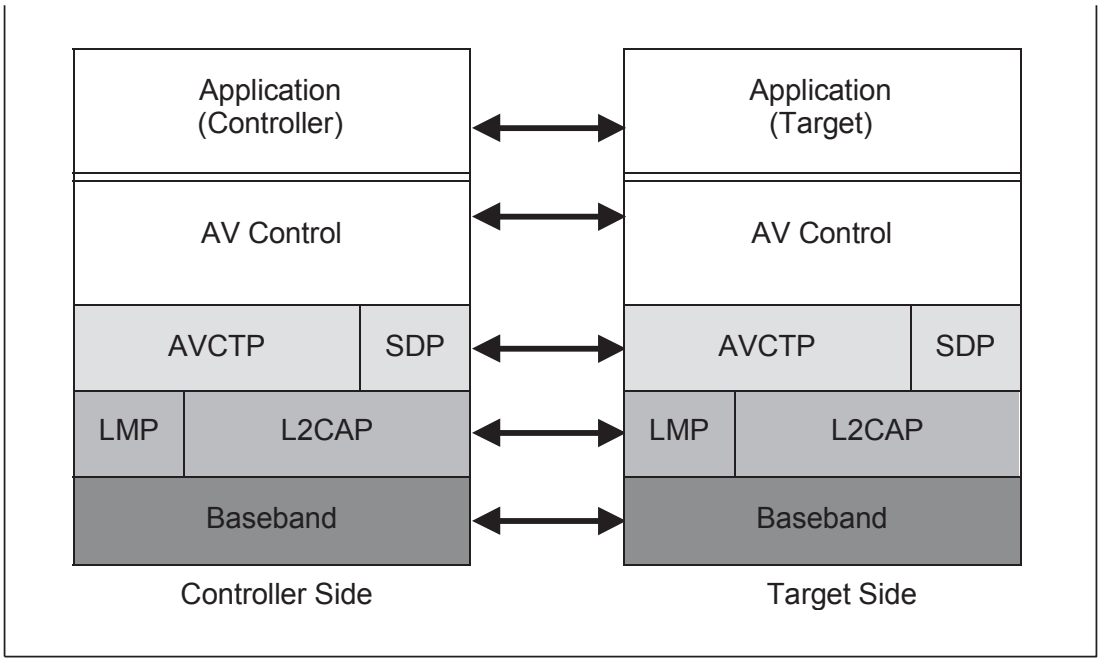

Figure 2.1: Protocol Model

The Baseband, LMP, and L2CAP are the OSI layer 1 and 2 Bluetooth protocols. AVCTP defines the procedures and messages to be exchanged for controlling A/V devices. SDP is the Bluetooth Service Discovery Protocol[10]. AV control is the entity responsible for A/V device control signalling; this signalling is AV/C command-based.

2.2 Configuration and Roles

For the configuration examples for this profile, refer to the figures shown in Section 2.3.

The following roles are defined for devices that comply with this profile:

- The **controller (CT)** is a device that initiates a transaction by sending a command frame to a target. Examples for CT are a personal computer, a PDA, a mobile phone, a remote controller or an AV device (such as headphone, player/recorder, timer, tuner, monitor etc.).

- The **target (TG)** is a device that receives a command frame and accordingly generates a response frame. Examples for TG are an audio player/recorder, a video player/recorder, a TV, a tuner, an amplifier or a headphone.

Exhibit 1005
Hewlett Packard Enterprise Company v. Sovereign Peak Ventures, LLC

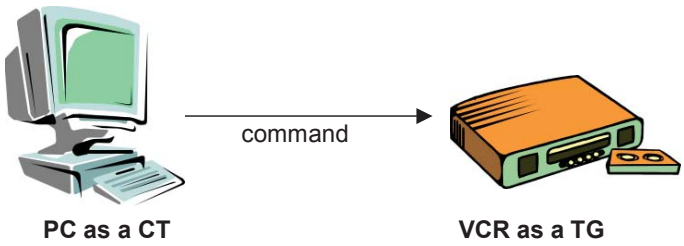

Figure 2.2: Controller and target

2.3 User Requirements

2.3.1 Scenarios

User requirements and scenarios for the configuration examples are described in this section.

The usage model of AVRCP is specific in a way that user action manipulates the control, but there is no limitation to perform the features in audio/video devices. AVRCP is capable to manipulate the menu function that is already commonly used for analogue devices for various features such as adjustment of TV brightness or hue, or VCR timer. With this menu function, AVRCP is designed so that any type features can be supported.

A user can learn the status information of a device using display on the body such as LED or LCD, as well as OSD (On Screen Display) method. Although a controller can not directly gain the status information from a target through AVCTP transaction, the similar information can be given to a user in various ways as feedback.

2.3.1.1 Remote Control from Separate Controller

In the configuration shown in Figure 2.3 below, the remote controller is the CT of the transaction. Command frames from the remote controller are sent to the portable disc player as a TG. An audio stream is sent from the portable disc player to the headphone. The headphone simply receives the audio stream and is not involved in the transaction between the remote controller and the portable disc player. A trigger of the transaction is made by a user from the remote controller, when he/she wishes to control the portable disc player.

Exhibit 1005
Hewlett Packard Enterprise Company v. Sovereign Peak Ventures, LLC

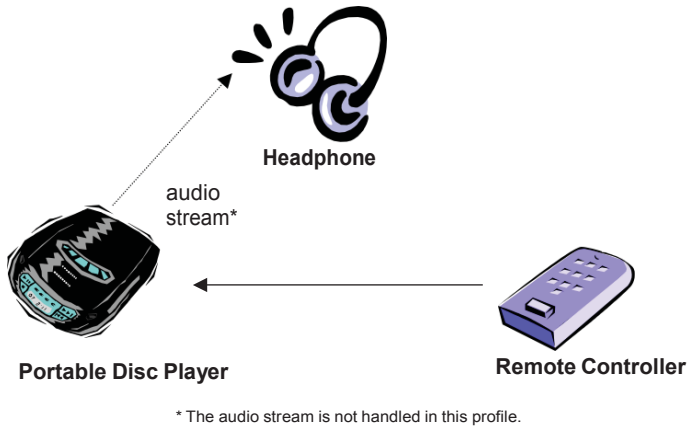

Figure 2.3: Remote Control from Separate Controller

2.3.1.2 Remote Control and Audio Stream Between Two Devices

In the configuration shown in Figure 2.4 below, the CT is the headphone and the portable disc player is the TG.

A trigger of the transaction is made by a user from the remote controller that accompanies the headphone, when he/she wishes to control the portable disc player.

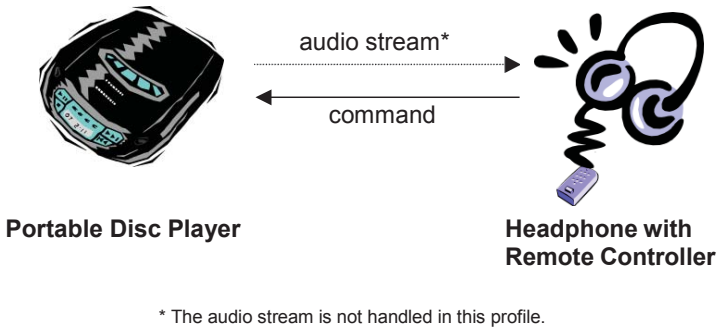

Figure 2.4: Remote Control and Audio Stream Between Two Devices

2.3.1.3 Mutual Remote Control Within a Piconet

In the configuration shown in Figure 2.5 below, both the headphone and the portable disc player are capable of working as remote controllers.

For example, the portable disc player becomes a CT if it controls the volume of the headphone that becomes a TG. On the other hand, the headphone becomes a CT when it sends a command to start playback or stop playing to the portable disc as a TG.

Exhibit 1005
Hewlett Packard Enterprise Company v. Sovereign Peak Ventures, LLC

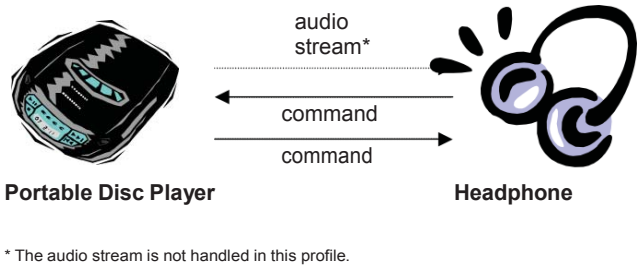

Figure 2.5: Mutual Remote Control Within a Piconet

2.3.1.4 Remote Controller with LCD

In the configuration shown in Figure 2.6 below, the remote controller is a CT. It receives audio and/or video data by sending commands to control the VCR as a TG. The remote controller can have an LCD or an audio speaker(s) to present received data to a user.

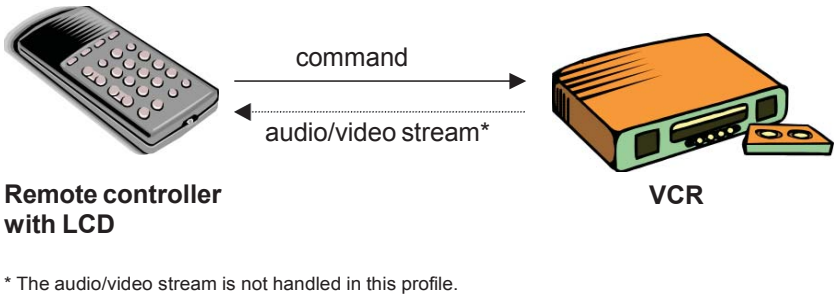

Figure 2.6: Remote Controller with LCD

2.3.2 User Expectations

In this section, user expectations and related restrictions of AVRCP are described.

Although a device may implement only AVRCP as shown in 2.3.1.1, it is assumed that, in most cases, an A/V distribution profile co-exists in a device. Items described in this section shall be considered according to the condition; whether only AVRCP is implemented, or one or more AV distribution profiles co-exist in the device.

2.3.2.1 Configuration

AVRCP is based on the control over point to point connection within a piconet. For this profile, it is assumed that the use case is active between the two devices. Note that one or more CTs may exist within a piconet. (Refer 2.3.1.3)

A controller may support several targets, and the detail of control such as target selection is not defined in AVRCP.

Exhibit 1005
Hewlett Packard Enterprise Company v. Sovereign Peak Ventures, LLC

2.3.2.2 Limited Latency

The responsiveness of remote control operations is an important feature of AVRCP. It is expected that the system reacts in a timely manner in order to avoid uncontrollable situations like system overload by repeated commands.

Latency figures depend on application. Additional information on the desired delay is provided in 15 Appendix A (Informative): Example of Latency.

CT and TG interoperate through L2CAP channel connections. In case the TG is a master, it is required to poll the slaves on a regular basis in order to satisfy the application QoS requirements. It is recommended that the polling rate is approximately 10 Hz.

2.3.2.3 Power Management

The discussions below are intended to be for application information only: there are no mandatory usages of the low power modes for AVRCP.

It is assumed that battery powered devices are common in the usage model of AVRCP, in case that CT is a handheld device. The device is recommended to ensure comparable service grade to the existing infrared product range.

Duplex radio systems suffer from higher power consumption compared to the simple infrared transmission controller. To compensate this fundamental drawback, dynamic use of low power modes is recommended especially when only AVRCP is implemented in a device.

Regarding the details of the low power modes (PARK, SNIFF, HOLD), refer to the Specification of the Bluetooth System, Core, Baseband[7] and Link Manager Protocol[9]. Appropriate low power mode strategy partly depends on applications.

2.3.2.4 User Action

The user action is required in most cases in AVRCP. Applications shall be designed based on this characteristic. It is possible to design simple automatic operation without a user action; such as a timer function that sends a command to start recording at pre-set time, within this profile.

2.4 Profile Fundamentals

The profile fundamentals, with which all applications shall comply, are the followings.

1. Use of security features in link level such as authorisation, authentication and encryption are optional. Support for authentication and encryption is mandatory,

Exhibit 1005
Hewlett Packard Enterprise Company v. Sovereign Peak Ventures, LLC

such that the device can take part in the corresponding procedures if requested from a peer device.

2. A link shall be established before commands can be initiated or received.

3. There are no fixed master/slave roles.

4. In this profile, the A/V functions are classified into four categories defined in Section 4.7. All devices that conform to this profile shall support at least one category, and may support several categories.

2.5 Conformance

When conformance to this profile is claimed, all capabilities indicated mandatory for this profile shall be supported in the specified manner (process mandatory). This also applies to optional and conditional capabilities, for which support is indicated, and subject to verification as part of the Bluetooth certification program.

Exhibit 1005
Hewlett Packard Enterprise Company v. Sovereign Peak Ventures, LLC

3 Application Layer

This section describes the feature requirements on units complying with the Audio/Video Remote Control Profile.

3.1 Feature Support

The table below shows the features requirements for this profile. Note that a device may have both CT and TG capabilities. In that case, features for both CT and TG are required.

	Feature	Support in CT	Support in TG
1.	Connection establishment for control	M	O
2.	Release connection for control	M	M
3.	Sending UNIT INFO command	O	X
4.	Receiving UNIT INFO command	X	M
5.	Sending SUBUNIT INFO command	O	X
6.	Receiving SUBUNIT INFO command	X	M
7.	Sending VENDOR DEPENDENT command	O	X
8.	Receiving VENDOR DEPENDENT command	X	O
9.	Sending PASS THROUGH command	M	X
10.	Receiving PASS THROUGH command	X	M

Table 3.1: Application Layer Features

3.2 Feature Mapping

The table below maps each feature to the procedures used for that feature. All procedures are mandatory if the feature is supported.

	Feature	Procedure	Ref.
1.	Connection establishment	Connection for control	4.1.1
2.	Connection release	Release connection for control	4.1.2
3.	Sending UNIT INFO command	Procedure of AV/C command	4.1.3
4.	Receiving UNIT INFO command	Procedure of AV/C command	4.1.3
5.	Sending SUBUNIT INFO command	Procedure of AV/C command	4.1.3
6.	Receiving SUBUNIT INFO command	Procedure of AV/C command	4.1.3
7.	Sending VENDOR DEPENDENT command	Procedure of AV/C command	4.1.3
8.	Receiving VENDOR DEPENDENT command	Procedure of AV/C command	4.1.3
9.	Sending PASS THROUGH command	Procedure of AV/C command	4.1.3
10.	Receiving PASS THROUGH command	Procedure of AV/C command	4.1.3

Table 3.2: Application Layer Feature to Procedure Mapping

Exhibit 1005
Hewlett Packard Enterprise Company v. Sovereign Peak Ventures, LLC

4 Control Interoperability Requirements

The interoperability requirements for an entity that is compatible with the AVRCP are completely contained in this chapter. The requirements directly relate to the application layer features.

4.1 Procedure

4.1.1 Connection for Control

An L2CAP connection establishment for AVCTP may be initiated by the CT or by the TG. An internal event or an event generated by a user, such as turning the power on, initiates the connection establishment.

Note: Only one L2CAP connection shall be established between AVCTP entities. If the connection already exists, the CT/TG shall not initiate the connection request.

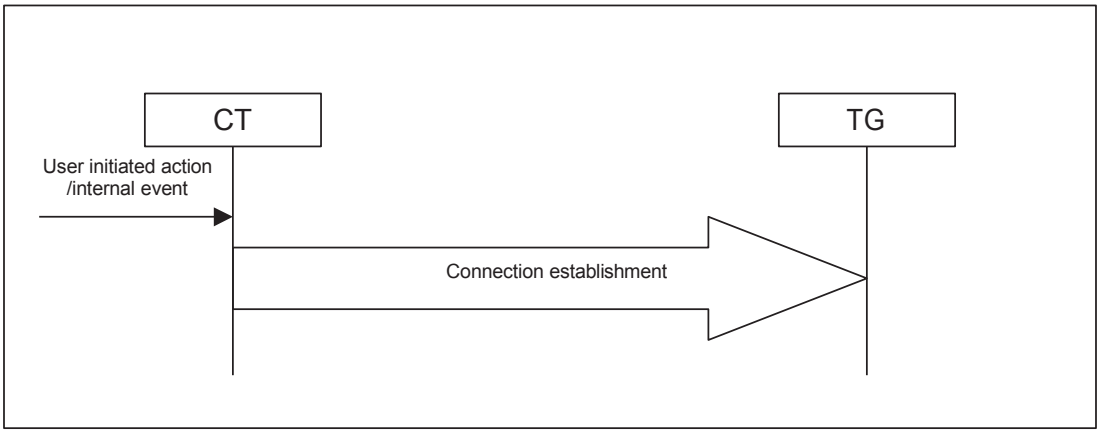

Figure 4.1: Connection Establishment Initiated by CT

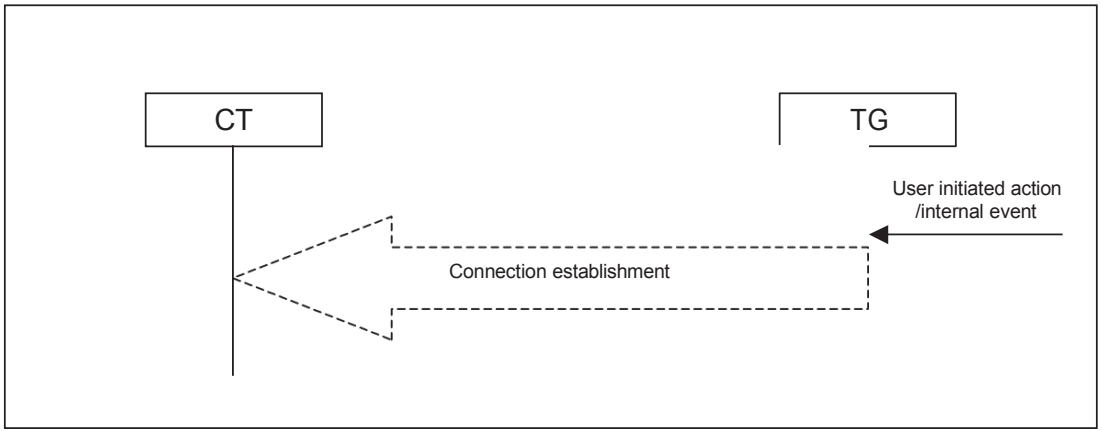

Figure 4.2: Connection Establishment Initiated by TG

Exhibit 1005
Hewlett Packard Enterprise Company v. Sovereign Peak Ventures, LLC

4.1.2 Release Connection for Control

Release of an L2CAP connection for AVCTP may be initiated by the CT or by the TG. An internal event or an event generated by a user, such as turning the power off, initiates the connection release.

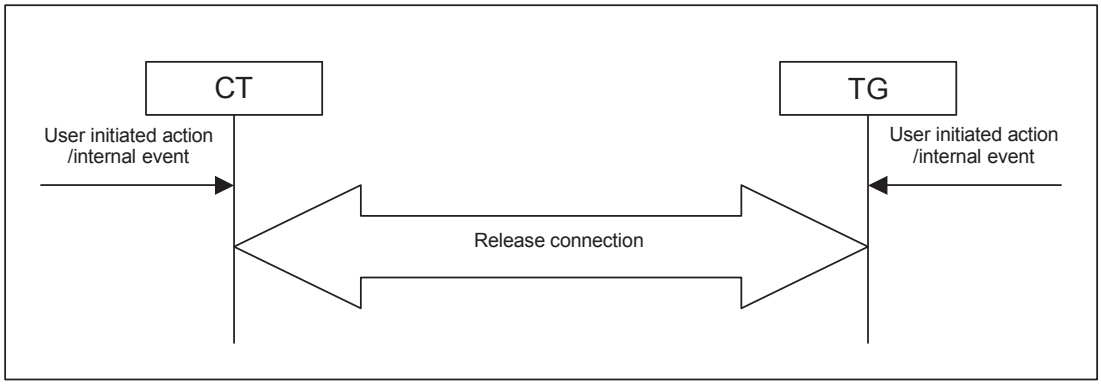

Figure 4.3: Connection Release Initiated by CT or TG

4.1.3 Procedure of AV/C Command

Upon an internal or an event generated by a user, the CT shall initiate connection establishment if a connection has not been established by then. Once the connection is established, it is able to send a AV/C command.

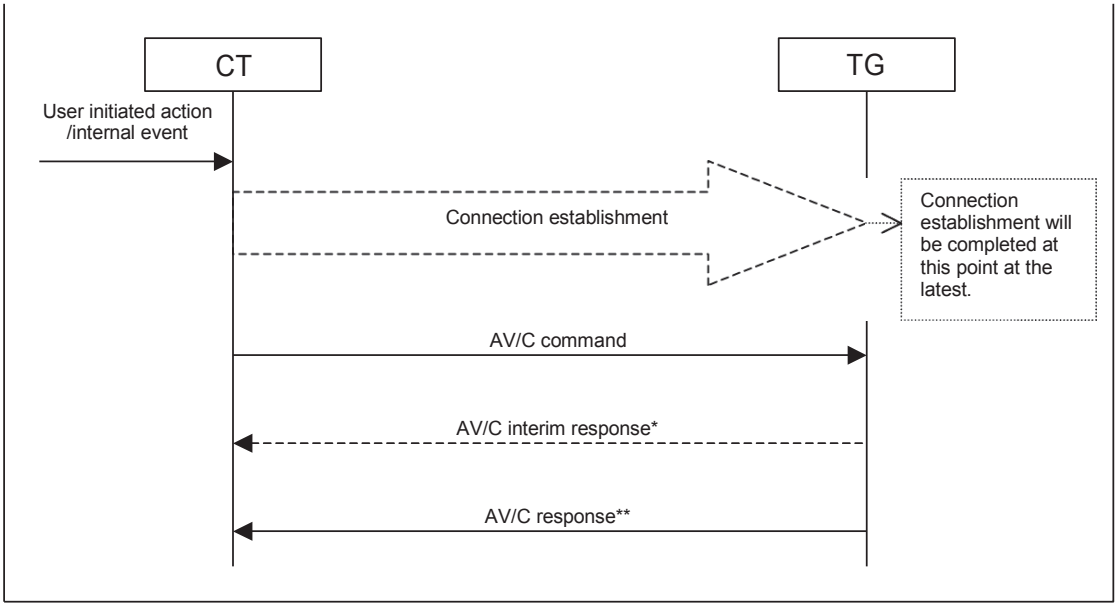

*: AV/C interim response may be returned in response to a VENDOR DEPENDENT command. AV/C interim response shall not be returned for other commands.

**: In some exceptional cases, the TG may not return a response. For details, refer to the AV/C General Specification.

Figure 4.4: Procedure of AV/C Command

Exhibit 1005
Hewlett Packard Enterprise Company v. Sovereign Peak Ventures, LLC

The following table shows the list of possible AV/C commands to be exchanged in this profile:

	Possible AV/C Command
1.	UNIT INFO command
2.	SUBUNIT INFO command
3.	VENDOR DEPENDENT command
4.	PASS THROUGH command

Table 4.1: List of Possible AV/C Commands

4.1.4AV/C Command Operation

This section describes the operation procedure of AV/C command exchange shown in Figure 4.4: Procedure of AV/C Command with examples. For more information of the AV/C unit/subunit model and AV/C command operation, refer to AV/C General Specification[1] and AV/C Panel Subunit Specification[2].

The AV/C General Specification covers the AV/C general command and response model, unit/subunit model, and standard unit and subunit commands. An AV/C subunit is an instantiation of a logical entity that is identified within an AV/C unit. An AV/C subunit has a set of coherent functions that the electronic device provides. Functions are defined for each category of devices in its subunit specification. (Monitor, Audio, Tape recorder/player, Disc, Tuner, etc.).

The AV/C command set consists of the AV/C General Specification and each subunit command. In the AV/C General Specification, the UNIT INFO command and SUBUNIT INFO command are both mandatory. For subunit commands, the mandatory commands are defined in each subunit specification, and it depends on the device implementation which subunit to support.

The UNIT INFO command is used to obtain information that pertains to the AV/C unit as a whole. The response frame includes information of the vendor ID of the TG and subunit type that best describes the unit. The information of vendor ID may be used to investigate the vendor of TG before using VENDOR DEPENDENT command. For example of subunit type, a VCR device may return the *unit_type* of the tape recorder/player, even though the VCR has a tuner. In this profile, the panel subunit is the main function. It is also possible that other subunits may be returned if other profiles co-exist in the device.

The SUBUNIT INFO command is used to obtain information about the subunit(s) of an AV/C unit. A device with this profile may support other subunits than the panel subunit if other profiles co-exist in the device, which can be found with the SUBUNIT INFO command. With this command, a typical AV/C controller manipulates AV/C function discovery.

The VENDOR DEPENDENT command permits module vendors to specify their own set of commands and responses for AV/C units or subunits determined by the AV/C address that is contained in the AV/C frame.

Exhibit 1005
Hewlett Packard Enterprise Company v. Sovereign Peak Ventures, LLC

The main feature of this profile is the remote control performed by the PASS THROUGH command of the Panel subunit. The Panel subunit provides a user-centric model for actuating the controls on a device. The controller controls the Panel subunit according to the user operation using certain controller-dependent manners. The user manipulates the user interface on the display or operates a button, and then the controller sends commands to the panel subunit. In response to these commands, the Panel subunit performs some action(s). Even though there may be several subunits in a TG, the TG shall have only one panel subunit. Unlike many other AV/C subunits, the panel subunit does not directly deal with media streams itself. The main purpose for using a panel subunit is to allow it to translate the incoming user action commands into internal actions, which affect other subunits and/or the unit, and dispatch them to an appropriate subunit or unit inside the TG using the TG-dependent manner. The result of these actions may have an effect on media streams. This profile uses the PASS THROUGH command, which is one of the subunit commands defined in the Panel Subunit Specification. A controller conveys a user operation to a TG by the PASS THROUGH command.

4.2 AVCTP Interoperability Requirements

4.2.1 Transaction Labels

On the CT side, it is application-dependent how transaction labels are handled, and therefore it is not defined in this specification. On the TG side, the transaction label received in an AVCTP command frame shall be used as the transaction label returned in the possible corresponding AVCTP response frame. In case several response frames are sent as reaction to one AVCTP command, all response frames shall use the same value of transaction label in the received command frame.

Exhibit 1005
Hewlett Packard Enterprise Company v. Sovereign Peak Ventures, LLC

4.2.2 Message Fragmentation

The support of AVCTP packet fragmentation in this profile is as follows:

Procedure of AV/C Command	Non-Fragmented AVCTP Message		Fragmented AVCTP Message	
	Support in CT	Support in TG	Support in CT	Support in TG
UNIT INFO	M	M	X	X
SUBUNIT INFO	M	M	X	X
VENDOR DEPENDENT	M	M	C1	C2
PASS THROUGH	M	M	C1	C2

C1,C2: In case a vendor defines a VENDOR DEPENDENT command or a vendor unique operation_id of a PASS THROUGH command that is longer than MTU, and if a device implements one, it is M (mandatory) to support the Fragmented AVCTP message. If not, it is X (excluded).

Table 4.2: AVCTP Fragmentation

4.2.3 Profile Identifier of AVCTP Message Information

Refer to Bluetooth Assigned Numbers[6] for the value of the profile Identifier for this profile.

Note: The value of Service Class for CT is “A/V Remote Control”, while the value for TG is “A/V Remote Control Target”. The value of Profile Identifier is the same for CT and TG, which is ”A/V Remote Control”.

4.3 AV/C Command and Response

AV/C command and response frames are encapsulated within the AVCTP Command/Response Message Information field, as described in AVCTP[3].

4.3.1 AV/C Transaction Rules

An AV/C transaction consists of one message containing a command frame addressed to the TG and zero or more messages containing a response frame returned to the CT by the TG. The TG is required to generate a response frame as quickly as possible, within a time period of T_{RCP} (100) counting from the moment a command frame is received.

For some transactions, the TG may not be able to complete the request or determine whether it is possible to complete the request within the T_{RCP} (100) allowed. In this case, the TG shall return an initial response code in INTERIM with the expectation that the final response follow later.

Note: INTERIM response may be returned in response to the VENDOR DEPENDENT command. INTERIM response shall not be returned for other commands.

For more detail regulations, refer to the AV/C General Specification[1].

Exhibit 1005
Hewlett Packard Enterprise Company v. Sovereign Peak Ventures, LLC

4.3.2 AV/C Command Frame

An AV/C command frame contains up to 512 bytes of data, and it is contained in the AVCTP Command/Response Message Information field. An AV/C command frame has the structure shown below.

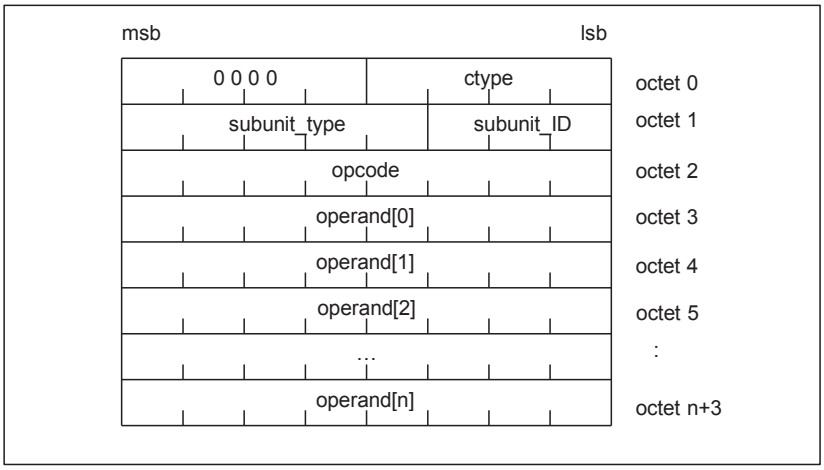

Figure 4.5: AV/C Command Frame

All of the operands are optional and are defined based on the values of *ctype, subunit_type,* and *opcode.*

4.3.3 AV/C Response Frame

An AV/C response frame is contained in the AVCTP Command/Response Message Information field, and it has the structure shown in the figure below.

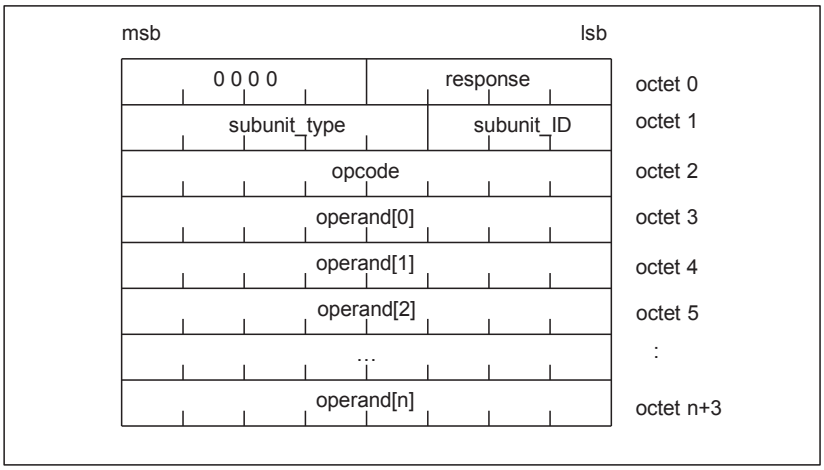

Figure 4.6: AV/C Response Frame

Exhibit 1005
Hewlett Packard Enterprise Company v. Sovereign Peak Ventures, LLC

All of the operands are optional and are defined based on the values of *ctype, subunit_type,* and *opcode.*

4.3.4 AV/C Frame Fields

For the fields and code values for AV/C command and response frames listed below, as well as the definition of reserved field and reserved value, refer to the AV/C General Specification.

- Command type codes (*ctype)*
- Response codes (*response*)
- AV/C address (*subunit_type, subunit_ID*)
- Subunit_type and subunit_ID encoding
- Operation (*opcode*)
- Operands

4.4 Supported Unit Commands

The unit commands shown in the following table are used in this profile. For unit commands, the *AV/C address* field of AV/C command frame shall indicate the value for unit.

Opcode	Support in CT			Support in TG			Comments
	CONTROL	STATUS	NOTIFY	CONTROL	STATUS	NOTIFY	
UNIT INFO	N/A	O	N/A	N/A	M*	N/A	Reports unit information
SUBUNIT INFO	N/A	O	N/A	N/A	M*	N/A	Reports subunit information

*: These commands shall be supported in AV/C-compliant devices to maintain the compatibility with the existing AV/C implementations.

Table 4.3: Supported Unit Commands

4.4.1 UNIT INFO Command

As defined in the AV/C General Specification, the UNIT INFO status command is used to obtain information that pertains to the unit as a whole. For details of the UNIT INFO command, refer to the AV/C General Specification[1].

In the *unit_type* field of a response frame, a code for a subunit type that represents the main function of the unit shall be shown. If the unit implements only this profile, it shall return the PANEL subunit.

Exhibit 1005
Hewlett Packard Enterprise Company v. Sovereign Peak Ventures, LLC

In the *company_ID* field of a response frame, the 24-bit unique ID obtained from the IEEE Registration Authority Committee shall be inserted. If the vendor of a TG device does not have the unique ID above, the value 0xFFFFFF may be used.

4.4.2 SUBUNIT INFO Command

As defined in the AV/C General Specification, the SUBUNIT INFO status command is used to obtain information about the subunit(s) of a unit. For details of the SUBUNIT INFO command, refer to the AV/C General Specification[1].

If the unit implements only this profile, it shall return PANEL subunit in the *subunit_type* field, and value 0 in the *max_subunit_ID* field in the response frame.

4.5 Supported Common Unit and Subunit Commands

The common unit and subunit commands shown in the following table are used in this profile. For the common unit and subunit command, the *AV/C address* field of the AV/C command frame shall indicate the value for unit or Panel Subunit if the command is one defined in this profile.

Opcode	Support in CT			Support in TG			Comments
	CONTROL	STATUS	NOTIFY	CONTROL	STATUS	NOTIFY	
VENDOR DEPENDENT	O*1	O*1	O*1	O*1	O*1	O*1	Vendor-dependent commands

*1: Vendor-dependent

Table 4.4: Supported Common Unit and Subunit Commands

4.5.1 VENDOR DEPENDENT Command

The formats of a command frame or a response frame, as well as the compliant usage rules, are as defined in the AV/C General Specification[1].

The VENDOR DEPENDENT command shall not be used instead of commands specified in the AVRCP that have the same functionality.

4.6 Supported Subunit Command

The PASS THROUGH command of the Panel subunit is used in this profile. The *operation_id*'s to be used in this profile depend on which A/V function category the device supports. The details of categories are described in Section 4.7, Categories.

For the PASS THROUGH command, the *AV/C address* field of the AV/C command frame shall indicate the value for Panel Subunit.

Opcode	Support in CT			Support in TG			Comments
	CONTROL	STATUS	NOTIFY	CONTROL	STATUS	NOTIFY	
PASS THROUGH	M*	N/A	N/A	M*	N/A	N/A	Used to transfer user operation information from CT to Panel subunit of TG.

Exhibit 1005
Hewlett Packard Enterprise Company v. Sovereign Peak Ventures, LLC

M*: Mandatory to support the opcode for PASS THROUGH command. See 4.7 for support levels of each *operation_id*'s

Table 4.5: PASS THROUGH Command

4.6.1 PASS THROUGH Command

As defined in the AV/C Panel Subunit Specification[2], the PASS THROUGH command is used to transfer user operation information from a CT to Panel subunit on TG. For the details of the PASS THROUGH command, refer to the AV/C Panel Subunit Specification[2].

4.7 Categories

This profile ensures the interoperability by classifying the A/V functions into four categories. For each category, the mandatory commands for the TG are defined by the *operation_id*s in the PASS THROUGH command. It is mandatory for the TG to support at least one of the categories.

4.7.1 Category 1: Player/Recorder

Basic operations of a player or a recorder are defined, regardless of the type of media (tape, disc, solid state, etc.) or the type of contents (audio or video, etc.). If a device supports this category 1, it shall be implemented with the two *operation_id*s of the PASS THROUGH command, “play” and “stop”.

4.7.2 Category 2: Monitor/Amplifier

The category 2 is to define basic operations of a video monitor or an audio amplifier. If a device supports this category 2, it shall be implemented with the two *operation_id*s of the PASS THROUGH command, “volume up” and “volume down”.

4.7.3 Category 3: Tuner

The category 3 defines the basic operation of a video tuner or an audio tuner. If a device supports this category 3, it shall be implemented with the two *operation_id*s of the PASS THROUGH command, “channel up” and “channel down”.

4.7.4 Category 4: Menu

The basic operations for a menu function are defined in category 4. The method to display menu data is not specified. It may be a display panel of the device itself, or on-screen display (OSD) on an external monitor. A device that supports category 4 shall be implemented with the six *operation_id*s of the PASS THROUGH command, “root menu”, “up”, “down”, “left”, “right”, and “select”.

4.7.5 Support Level in TG

The table below is the *operation_id*s and their support level in TG for each category.

Exhibit 1005
Hewlett Packard Enterprise Company v. Sovereign Peak Ventures, LLC

“C1” in the table below means that the command is mandatory if the TG supports category 1. In the same manner, “C2” means mandatory in category 2, “C3” in category 3, and “C4” in category 4.

“X” in the table below means that the *operation_id* is not supported in the category.

operation_id	**Category 1: Player/Recorder**	**Category 2: Monitor/Amplifier**	**Category 3: Tuner**	**Category 4: Menu**
select	X	X	X	C4
up	X	X	X	C4
down	X	X	X	C4
left	X	X	X	C4
right	X	X	X	C4
right-up	X	X	X	O
right-down	X	X	X	O
left-up	X	X	X	O
left-down	X	X	X	O
root menu	X	X	X	C4
setup menu	X	X	X	O
contents menu	X	X	X	O
favorite menu	X	X	X	O
exit	X	X	X	O
0	O	O	O	O
1	O	O	O	O
2	O	O	O	O
3	O	O	O	O
4	O	O	O	O
5	O	O	O	O
6	O	O	O	O
7	O	O	O	O
8	O	O	O	O
9	O	O	O	O
dot	O	O	O	O
enter	O	O	O	O
clear	O	O	O	O
channel up	X	X	C3	X
channel down	X	X	C3	X
previous channel	X	X	O	X
sound select	O	O	O	X
input select	O	O	O	X
display information	O	O	O	O
help	O	O	O	O
page up	X	X	X	O
page down	X	X	X	O
power	O	O	O	O
volume up	X	C2	X	X
volume down	X	C2	X	X
mute	X	O	X	X
play	C1	X	X	X
stop	C1	X	X	X
pause	O	X	X	X
record	O	X	X	X
rewind	O	X	X	X
fast forward	O	X	X	X
eject	O	X	X	X
forward	O	X	X	X
backward	O	X	X	X
angle	O	X	O	X

Exhibit 1005
Hewlett Packard Enterprise Company v. Sovereign Peak Ventures, LLC

operation_id	Category 1: Player/Recorder	Category 2: Monitor/Amplifier	Category 3: Tuner	Category 4: Menu
subpicture	O	X	O	X
F1	O	O	O	O
F2	O	O	O	O
F3	O	O	O	O
F4	O	O	O	O
F5	O	O	O	O
vendor unique*	O	O	O	O

*: The vendor-unique *operation_id* shall not be used instead of *operation_id* specified in the PASS THROUGH command that has the same functionality.

Table 4.6: Support Levels of operation_id in TG

4.7.6 Support Level in CT

No mandatory command for the CT is defined by the *operation_id*s in the PASS THROUGH command. However, it is mandatory in CT to support at least one of the *operation_id*s. The category for CT indicates that the CT expects to control a TG supporting the corresponding category. It is mandatory for CT to support at least one of categories. The table below is the *operation_id*s and their support level in CT for each category.

“C1” in the table below means that it is mandatory to support at least one of these *operation_id*s if the CT supports category 1. In the same manner, “C2” in category 2, “C3” in category 3, and “C4” in category 4.

“X” in the table below means that the *operation_id* is not supported in the category.

operation_id	Category 1: Player/Recorder	Category 2: Monitor/Amplifier	Category 3: Tuner	Category 4: Menu
select	X	X	X	C4
up	X	X	X	C4
down	X	X	X	C4
left	X	X	X	C4
right	X	X	X	C4
right-up	X	X	X	C4
right-down	X	X	X	C4
left-up	X	X	X	C4
left-down	X	X	X	C4
root menu	X	X	X	C4
setup menu	X	X	X	C4
contents menu	X	X	X	C4
favorite menu	X	X	X	C4
exit	X	X	X	C4
0	C1	C2	C3	C4
1	C1	C2	C3	C4
2	C1	C2	C3	C4
3	C1	C2	C3	C4
4	C1	C2	C3	C4
5	C1	C2	C3	C4
6	C1	C2	C3	C4
7	C1	C2	C3	C4
8	C1	C2	C3	C4
9	C1	C2	C3	C4
dot	C1	C2	C3	C4

Exhibit 1005
Hewlett Packard Enterprise Company v. Sovereign Peak Ventures, LLC

operation_id	**Category 1: Player/Recorder**	**Category 2: Monitor/Amplifier**	**Category 3: Tuner**	**Category 4: Menu**
enter	C1	C2	C3	C4
clear	C1	C2	C3	C4
channel up	X	X	C3	X
channel down	X	X	C3	X
previous channel	X	X	C3	X
sound select	C1	C2	C3	X
input select	C1	C2	C3	X
display information	C1	C2	C3	C4
help	C1	C2	C3	C4
page up	X	X	X	C4
page down	X	X	X	C4
power	C1	C2	C3	C4
volume up	X	C2	X	X
volume down	X	C2	X	X
mute	X	C2	X	X
play	C1	X	X	X
stop	C1	X	X	X
pause	C1	X	X	X
record	C1	X	X	X
rewind	C1	X	X	X
fast forward	C1	X	X	X
eject	C1	X	X	X
forward	C1	X	X	X
backward	C1	X	X	X
angle	C1	X	C3	X
subpicture	C1	X	C3	X
F1	C1	C2	C3	C4
F2	C1	C2	C3	C4
F3	C1	C2	C3	C4
F4	C1	C2	C3	C4
F5	C1	C2	C3	C4
vendor unique*	C1	C2	C3	C4

*: The vendor-unique *operation_id* shall not be used instead of *operation_id* specified in the PASS THROUGH command that has the same functionality.

Table 4.7: Support Levels of operation_id in CT

Exhibit 1005
Hewlett Packard Enterprise Company v. Sovereign Peak Ventures, LLC

5 Service Discovery Interoperability Requirements

This profile defines the following service records for the CT and the TG, respectively.

The codes assigned to the mnemonics used in the Value column as well as the codes assigned to the attribute identifiers (if not specifically mentioned in the AttrID column) can be found in the Bluetooth Assigned Numbers document[6].

Item	Definition	Type	Value	AttrID	Status	Default
Service Class ID List					M	
Service Class #0		UUID	A/V Remote Control		M	
Protocol Descriptor List					M	
Protocol #0		UUID	L2CAP		M	
Parameter #0 for Protocol #0	PSM	Uint 16	PSM= AVCTP		M	
Protocol #1		UUID	AVCTP		M	
Parameter #0 for Protocol #1	Version	Uint 16	0x0100*[1]		M	
Bluetooth Profile Descriptor List					M	
Profile #0		UUID	A/V Remote Control		M	
Parameter #0 for Profile #0	Version	Uint 16	0x0100*[1]		M	
Supported Features	AVRCP features flags	Uint 16	*2) Bit 0 = Category 1 Bit 1 = Category 2 Bit 2 = Category 3 Bit 3 = Category 4 Bit 4-15 = RFA The bits for supported categories are set to 1. Others are set to 0.		M	
Provider Name	Displayable Text Name	String	Provider Name		O	
Service Name	Displayable Text Name	String	Service Provider-defined		O	

*1: The value indicates Version 1.0.

*2: The value indicates the category(ies) of a TG that the CT expects to control. It is not necessary for a CT to have capabilities to initiate all of the mandatory commands of the indicated category(ies).

Table 5.1: Service Record for CT

Exhibit 1005
Hewlett Packard Enterprise Company v. Sovereign Peak Ventures, LLC

Item	Definition	Type	Value	AttrID	Status	Default
Service Class ID List					M	
Service Class #0		UUID	A/V Remote Control Target		M	
Protocol Descriptor List					M	
Protocol #0		UUID	L2CAP		M	
Parameter #0 for Protocol #0	PSM	Uint 16	PSM=AVCTP		M	
Protocol #1		UUID	AVCTP		M	
Parameter #0 for Protocol #1	Version	Uint 16	0x0100*[1]		M	
Bluetooth Profile Descriptor List					M	
Profile #0		UUID	A/V Remote Control		M	
Parameter #0 for Profile #0	Version	Uint 16	0x0100*[1]		M	
Supported Features	AVRCP features flags	Uint 16	*2 Bit 0 = Category 1 Bit 1 = Category 2 Bit 2 = Category 3 Bit 3 = Category 4 Bit 4-15 = RFA The bits for supported categories are set to 1. Others are set to 0.		M	
Provider Name	Displayable Text Name	String	Provider Name		O	
Service Name	Displayable Text Name	String	Service-provider defined		O	

*1: The value indicates Version 1.0.

*2: The value indicates the category(ies) that the TG supports. The TG shall be implemented with all of mandatory commands of the indicated category(ies).

Table 5.2: Service Record for TG

Exhibit 1005
Hewlett Packard Enterprise Company v. Sovereign Peak Ventures, LLC

6 L2CAP Interoperability Requirements

The following text together with the associated sub-clauses defines the mandatory requirements with regard to this profile.

	Procedure	Support in CT/TG
1.	Channel types	
	Connection-oriented channel	M
	Connectionless channel	X1
2.	Signalling	
	Connection establishment	M
	Configuration	M
	Connection Termination	M
	Echo	M
	Command Rejection	M
3.	Configuration Parameter Options	
	Maximum Transmission Unit	M
	Flush Timeout	M
	Quality of Service	O

X1: Connectionless channel is not used within the execution of this profile, but concurrent use by other profiles/applications is not excluded.

6.1 Channel Types

In this profile, only connection-oriented channels shall be used. This implies that broadcasts shall not be used in this profile.

In the PSM field of the Connection Request packet, the value for AVCTP defined in the Bluetooth Assigned Numbers document[6] shall be used.

6.2 Signalling

Only the CT may issue an L2CAP Connection Request within the execution of this profile. Other than that, AVRCP does not impose any additional restrictions or requirements on L2CAP signalling.

6.3 Configuration Options

This section describes the usage of configuration options in AVRCP.

6.3.1 Maximum Transmission Unit

The minimum MTU that a L2CAP implementation for this profile shall support is 48 bytes.

6.3.2 Flush Timeout

Application shall set the appropriate value for responding time to the flush timeout.

Exhibit 1005
Hewlett Packard Enterprise Company v. Sovereign Peak Ventures, LLC

Remark: Flush timeout can be constrained by the ACL channels when the other applications (such as audio/video streaming or file sharing) coexist with AVRCP.

6.3.3 Quality of Service

Negotiation of Quality of Service is optional in this profile.

Exhibit 1005
Hewlett Packard Enterprise Company v. Sovereign Peak Ventures, LLC

7 Link Manager (LM) Interoperability Requirements

The procedure for SCO links is excluded. Other than that, there is no change to the requirements as stated in the Link Manager specification itself. (See Section 3 in [9].)

Exhibit 1005
Hewlett Packard Enterprise Company v. Sovereign Peak Ventures, LLC

8 Link Controller (LC) Interoperability Requirements

The following table lists all features at LC level, and the extra requirements are added to the one in the Baseband specification by this profile.

	Procedure	Support in CT	Support in TG
1.	Inquiry	M	O
2.	Inquiry scan	M	M
3.	Paging	M	O
4.	Page scan		
	A. Type R0	C1	C2
	B. Type R1	C1	C2
	C. Type R2	C1	C2
5.	Packet types		
	A. ID packet	M	M
	B. NULL packet	M	M
	C. POLL packet	M	M
	D. FHS packet	M	M
	E. DM1packet	M	M
	F. DH1 packet	M	M
	G. DM3 packet	O	O
	H. DH3 packet	O	O
	I. DM5 packet	O	O
	J. DH5 packet	O	O
	K. AUX packet	X	X
	L. HV1 packet	X	X
	M. HV2 packet	X	X
	N. HV3 packet	X	X
	O. DV packet	X	X
6.	Inter-piconet capabilities	X	X
7.	Air mode		
	A. A-law	X	X
	B. μ-law	X	X
	C. CVSD	X	X
	D. Transparent data	X	X

C1, C2: It is mandatory to implement at least one of the page scan modes.

Table 8.1: LC Capabilities

8.1 Class of Device

A device that is active in the CT role shall indicate as follows in the Class of Device field, if it is a stand-alone remote controller.

1. Indicate ‘Peripheral’ as Major Device class

2. Indicate “Remote control” as the Minor Device class

Exhibit 1005
Hewlett Packard Enterprise Company v. Sovereign Peak Ventures, LLC

9 Generic Access Profile Requirements

This section defines the support requirements for the capabilities as defined in the Generic Access Profile[8].

9.1 Modes

The table shows the support status for Modes within this profile.

	Procedure	Support in CT	Support in TG
1.	Discoverability modes		
	Non-discoverable mode	C1	C1
	Limited discoverable mode	O	O
	General discoverable mode	M	M
2.	Connectability modes		
	Non-connectable mode	X	X
	Connectable mode	M	M
3.	Pairing modes		
	Non-pairable mode	O	O
	Pairable mode	C2	C2

C1: If Limited discoverable mode is supported, Non-discoverable mode is mandatory otherwise optional.

C2: Mandatory if Bonding is supported otherwise optional.

Table 9.1: Modes

9.2 Security Aspects

There is no change to the requirements as stated in the General Access Profile.

9.3 Idle Mode Procedures

The table shows the support status for Idle mode procedures within this profile.

	Procedure	Support in CT	Support in TG
1.	General inquiry	M	O
2.	Limited inquiry	O	O
3	Name discovery	O	O
4.	Device discovery	O	O
5.	Bonding	O	O*

*: Acceptance of bonding shall be supported. If General inquiry is supported, initiation of bonding shall be supported, otherwise, should be supported.

Table 9.2: Supported Idle Mode Procedures

Exhibit 1005
Hewlett Packard Enterprise Company v. Sovereign Peak Ventures, LLC

10 Timers and Counters

The following timer is required by AVRCP.

Timer Name	Proposed Value	Description
T_{RCP} (100)	100 milliseconds	A TG shall return its response frame within 100 milliseconds counting from the receipt of the command frame.

Table 10.1: Timers

There are no AVRCP specific counters.

Exhibit 1005
Hewlett Packard Enterprise Company v. Sovereign Peak Ventures, LLC

11 Testing

The Audio Video Remote Control Profile requires interoperability test. The details of the test strategy are described in [5]. Tested functionality is defined in [4].

Exhibit 1005
Hewlett Packard Enterprise Company v. Sovereign Peak Ventures, LLC

12 References

[1] 1394 Trade Association , AV/C Digital Interface Command Set – General Specification, Version 4.0, Document No. 1999026 (http://www.1394ta.org)

[2] 1394 Trade Association , AV/C Panel Subunit, Version 1.1, Document No. 2001001 (http://www.1394ta.org)

[3] Bluetooth SIG, Specification of the Bluetooth System, Core, Version 1.0, Audio/Video Control Transport Protocol

[4] Bluetooth SIG, Specification of the Bluetooth System, ICS, Version 1.0, ICS proforma for Audio/Video Remote Control Profile

[5] Bluetooth SIG, Specification of the Bluetooth System, TSS, Version 1.0, Test Suite Structure (TSS) and Test Procedures (TP) for Audio/Video Remote Control Profile

[6] Bluetooth SIG, Bluetooth Assigned Numbers http://www.bluetooth.org/assigned-numbers.htm

[7] Bluetooth SIG, Specification of the Bluetooth System, Core, Version 1.1, Part B (Baseband)

[8] Bluetooth SIG, Specification of the Bluetooth System, Profile, Version 1.1, Part K:1 (Generic Access Profile)

[9] Bluetooth SIG, Specification of the Bluetooth System, Core, Version 1.1, Part C (Link Manager Protocol)

[10] Bluetooth SIG, Specification of the Bluetooth System, Core, Version 1.1, Part E (Service Discovery Protocol)

Exhibit 1005
Hewlett Packard Enterprise Company v. Sovereign Peak Ventures, LLC

13 List of Figures

Figure 1.1: Audio/Video Remote Control Profile Dependency 11
Figure 1.2: Signalling Conventions 13
Figure 2.1: Protocol Model 15
Figure 2.2: Controller and target 16
Figure 2.3: Remote Control from Separate Controller 17
Figure 2.4: Remote Control and Audio Stream Between Two Devices 17
Figure 2.5: Mutual Remote Control Within a Piconet 18
Figure 2.6: Remote Controller with LCD 18
Figure 4.1: Connection Establishment Initiated by CT 22
Figure 4.2: Connection Establishment Initiated by TG 22
Figure 4.3: Connection Release Initiated by CT or TG 23
Figure 4.4: Procedure of AV/C Command 23
Figure 4.5: AV/C Command Frame 27
Figure 4.6: AV/C Response Frame 27
Figure 18.1: UNIT INFO Command Frame 49
Figure 18.2: UNIT INFO Response Frame 50
Figure 18.3: SUBUNIT INFO Command Frame 50
Figure 18.4: SUBUNIT INFO Response Frame 50
Figure 18.5: PASS THROUGH Command Frame 51
Figure 18.6: PASS THROUGH Response Frame 51

Exhibit 1005
Hewlett Packard Enterprise Company v. Sovereign Peak Ventures, LLC

14 List of Tables

Table 3.1: Application Layer Features 21
Table 3.2: Application Layer Feature to Procedure Mapping 21
Table 4.1: List of Possible AV/C Commands 24
Table 4.2: AVCTP Fragmentation 26
Table 4.3: Supported Unit Commands 28
Table 4.4: Supported Common Unit and Subunit Commands 29
Table 4.5: PASS THROUGH Command 30
Table 4.6: Support Levels of operation_id in TG 32
Table 4.7: Support Levels of operation_id in CT 33
Table 5.1: Service Record for CT 34
Table 5.2: Service Record for TG 35
Table 8.1: LC Capabilities 39
Table 9.1: Modes 40
Table 9.2: Supported Idle Mode Procedures 40
Table 10.1: Timers 41
Table 15.1: Example of Latency 46
Table 16.1: Category Combination Examples 47

Exhibit 1005
Hewlett Packard Enterprise Company v. Sovereign Peak Ventures, LLC

15 Appendix A (Informative): Example of Latency

This section is intended to be information for application only: There are no requirements for the latency.

The value of maximum latency is shown below.

The latency includes the initiation on the sender side up to the start of the requested procedure on the receiving side.

Application example	From	To	Latency
Figure 2.3: Remote Control from Separate Controller	Remote Controller	Portable Disc Player	100 msec
Figure 2.4: Remote Control and Audio Stream Between Two Devices	Headphone	Portable Disc Player	100 msec
Figure 2.5: Mutual Remote Control Within a Piconet	Headphone	Portable Disc Player	100 msec
	Portable Disc Player	Headphone	100 msec
Figure 2.6: Remote Controller with LCD	Remote Controller	VCR	100 msec

Table 15.1: Example of Latency

Exhibit 1005
Hewlett Packard Enterprise Company v. Sovereign Peak Ventures, LLC

16 Appendix B (Informative): Example of A/V Devices

General functions of A/V devices can be realized by choosing several categories from category 1 to category 4 of TG. The following table shows the possible combination of categories for each function. Note that the table simply presents examples, and does not specify categories that a device shall support.

Functions	Categories to Support	Device Examples
Audio player without volume control	1	CD player (component), MD player (component)
Audio player with volume control	1, 2	portable disk player
Audio receiver	3	tuner (component)
Audio receiver	2, 3	portable radio
Audio recorder with receiver	1, 2, 3	cassette tape recorder with receiver
Audio amplifier	2	amplifier, headphone
Video recorder without volume control	1	portable video camera recorder
Video recorder with volume control	1, 2, 3	portable VCR with LCD display, TV with VCR
Video recorder with receiver	1, 3	VCR, video disk recorder
TV	2, 3	TV
Video recorder with menu operation	1, 3, 4	VCR with menu control function
TV with menu operation	2, 3, 4	TV with menu control function
Amplifier with menu operation	2, 4	amplifier with menu control function
Video monitor with menu operation	4	video projector with menu control function

Table 16.1: Category Combination Examples

Exhibit 1005
Hewlett Packard Enterprise Company v. Sovereign Peak Ventures, LLC

17 Appendix C (Informative): Multiple applications use of AVCTP

Every profile based on Audio/Video Control Transport Protocol (AVCTP) uses a single L2CAP channel. When there are two devices, one simply works as the CT and another simply as the TG, the connection on a single L2CAP channel between them can be established or released by an application as the need arises. However, when one of the devices supports several profiles or two roles, the CT and the TG, the operation to release a connection should be manipulated carefully.

For example, even if application 'A' wants to discard a connection for control, another application 'B' may need the connection kept established. If application 'A' releases the connection on its own judgment, and then if application 'B' needs to send a command, application 'B' shall re-establish another connection for control to send a command, which causes a delay.

A necessary connection to be released by another application, can be avoided by implementation. That is, before releasing the connection for control, an application should try to investigate whether other profiles or other role of the same profile in the device uses AVCTP. It is recommended to apply above implementation solution when developing a device that supports both CT and TG, or supports another control profile in addition to AVRCP.

Exhibit 1005
Hewlett Packard Enterprise Company v. Sovereign Peak Ventures, LLC

18 Appendix D (Informative): Example of AV/C Commands and Responses

This chapter shows several examples of commands from a CT and responses from a TG exchanged in case a TG supports only AVRCP as its AV control profile. Note that the structures of commands and responses mentioned in this chapter are merely examples, and fields may have different structures or values according to the situations. Refer AV/C General Specification[1] and AV/C Panel Subunit Specification[2].

18.1 UNIT INFO command

The frame structure of UNIT INFO command is as shown below.

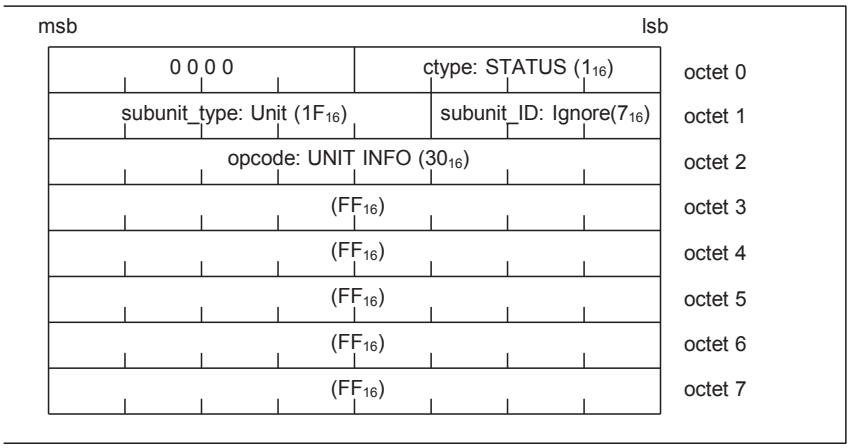

Figure 18.1: UNIT INFO Command Frame

An example of a response returned to above command frame is as follows.

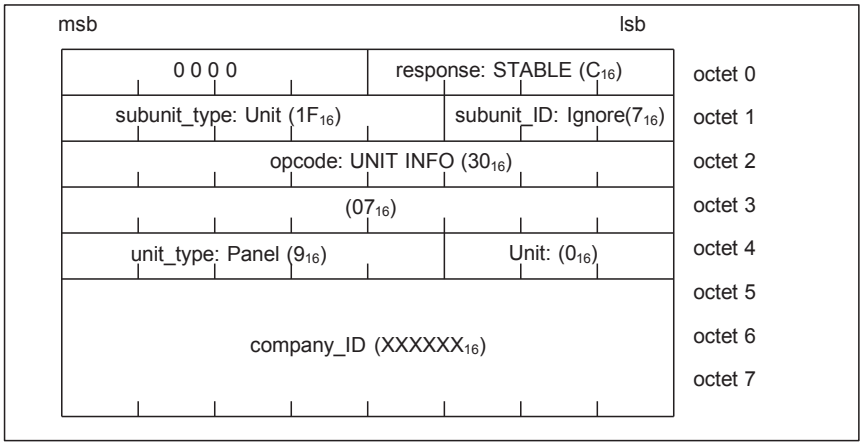

Exhibit 1005
Hewlett Packard Enterprise Company v. Sovereign Peak Ventures, LLC

Figure 18.2: UNIT INFO Response Frame

If, in future, a Bluetooth AV control profile that applies AV/C command set is defined, and if a TG supports this AV control profile in addition to AVRCP, it is possible that a TG returns other subunit type than Panel as its *unit_type*.

18.2 SUBUNIT INFO command

The frame structure of SUBUNIT INFO command is as shown below.

msb			lsb	
0 0 0 0		ctype: STATUS (1_{16})		octet 0
subunit_type: Unit ($1F_{16}$)		subunit_ID: Ignore(7_{16})		octet 1
opcode: SUBUNIT INFO (31_{16})				octet 2
0	page: (0_{16})	0	extention_code: (7_{16})	octet 3
(FF_{16})				octet 4
(FF_{16})				octet 5
(FF_{16})				octet 6
(FF_{16})				octet 7

Figure 18.3: SUBUNIT INFO Command Frame

An example of a response returned to above command frame is as follows.

msb			lsb	
0 0 0 0		response: STABLE (C_{16})		octet 0
subunit_type: Unit ($1F_{16}$)		subunit_ID: Ignore(7_{16})		octet 1
opcode: SUBUNIT INFO (31_{16})				octet 2
0	page: (0_{16})	0	extention_code: (7_{16})	octet 3
subunit_type: Panel (9_{16})		max_subunit_ID: (0_{16})		octet 4
(FF_{16})				octet 5
(FF_{16})				octet 6
(FF_{16})				octet 7

Figure 18.4: SUBUNIT INFO Response Frame

Exhibit 1005
Hewlett Packard Enterprise Company v. Sovereign Peak Ventures, LLC

If, in future, a Bluetooth AV control profile that applies AV/C command set is defined, and if a TG supports this AV control profile in addition to AVRCP, the TG returns all of its supporting subunits including Panel in *page_data* field.

18.3 PASS THROUGH command

The PASS THROUGH command is a command sent when a “PLAY” button on a CT is pushed by a user. Its frame structure is as shown below. A CT sends a command frame with its *state_flag* field in value 0 when a button is pushed, and in value 1 when the button is released.

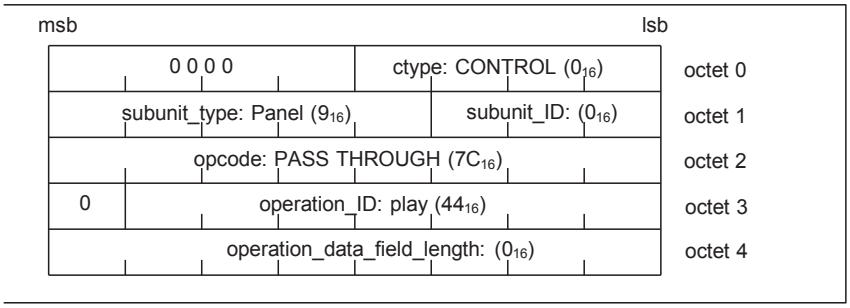

Figure 18.5: PASS THROUGH Command Frame

An example of a response returned to above command frame is as follows.

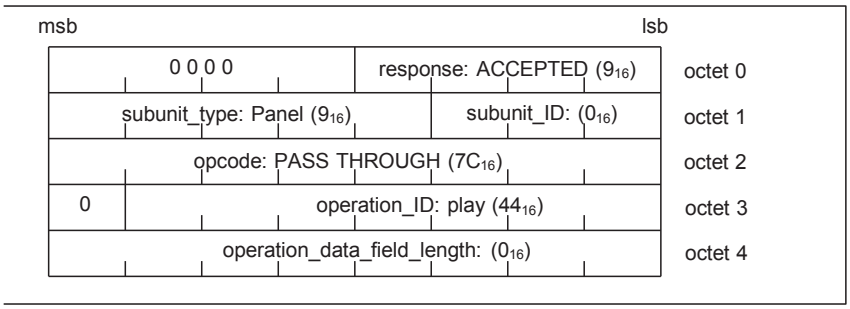

Figure 18.6: PASS THROUGH Response Frame

Exhibit 1005
Hewlett Packard Enterprise Company v. Sovereign Peak Ventures, LLC

19 Appendix E: Acronyms and Abbreviations

Acronym	Description
1394TA	1394 Trade Association
A/V	Audio/Video
AV/C	The AV/C Digital Interface Command Set
AVCTP	Audio/Video Control Transport Protocol
AVRCP	Audio/Video Remote Control Profile
CT	Controller
ICS	Implementation Conformance Statement
IEEE	The Institute of Electrical and Electronics Engineers
LC	Link Controller
LM	Link Manager
MTU	Maximum Transmission Unit
PSM	Protocol/Service Multiplexer
QoS	Quality of Service
RFA	Reserved for Future Additions
RFD	Reserved for Future Definition
SDP	Service Discovery Protocol
TG	Target
TP	Test Purpose
TSS	Test Suite Structure

Exhibit 1005
Hewlett Packard Enterprise Company v. Sovereign Peak Ventures, LLC